CONSTRUCTION PLANS FOR ARTERIAL STREET REHABILITATION AND WATERLINE REPLACEMENT FOR 36TH ST. NORTH FROM MLK JR BLVD. TO PEORIA AVE.

PROJECT NO. 144200, TMUA-W 15-04 & SWD 10669

ACCOUNT NO. 6328-5453104-040522144200

CITY OF TULSA, OKLAHOMA
ENGINEERING SERVICES DEPARTMENT

DESIGN DATA

DESIGN SPEED	= 40 MPH
ADT 2015	= 11,000
ADT 2035	= 19,867
D	= 55%
T	= 5%
T3	= 5%
20yr ESALS	= 7.4 M

SYMBOL LEGEND

- EM – Electric Meter
- EB – Electric Box
- ET – Electric Transformer
- FH – Fire Hydrant
- GM – Gas Meter
- GV – Gas Valve
- GUY – Guy Anchor
- ICV – Irrigation Control Valve
- JB – Junction Box
- LP – Light Pole
- MB – Mailbox
- PP – Power Pole
- SN – Sign
- SSCO – Sanitary Sewer Cleanout
- SSMH – Sanitary Sewer Manhole
- SWMH – Storm Water Manhole
- SH – Sprinkler Head
- TS – Traffic Signal
- TSB – Traffic Signal Box
- TPED – Telephone Pedestal
- WM – Water Meter
- WV – Water Valve
- – Deciduous Tree
- – Coniferous Tree
- – Bush
- x—x – Fence Line (All Types)
- OHE – Overhead Electric
- EUG – Underground Electric
- CATV – Underground Cable Television
- FOC – Underground Fiber Optic
- TUG – Underground Telephone
- G – Natural Gas Line
- Stormwater Line
- SS – Sanitary Sewer Line
- W – Water Line
- – Bench Mark
- – Survey Control Point Found
- – Survey Control Point Set

PLANS PREPARED BY

PEC PROFESSIONAL ENGINEERING CONSULTANTS, P.A.
1924 S. UTICA AVE., SUITE 1400
TULSA, OK 74104
918-664-5400
www.pec1.com

CERTIFICATE OF AUTHORIZATION NO.1046 EXPIRES JUNE 30, 2021

HORIZONTAL DATUM: OKLAHOMA STATE PLANE COORDINATE SYSTEM, NORTH ZONE 3051, NAD83 (1993)

VERTICAL DATUM: NAVD 1988

SCALE FACTOR: 0.99991793

BENCHMARKS

ADS MONUMENT #82
⅝" REBAR W/1 ½" ALUMINUM CAP FLUSH SET IN CONCRETE STAMPED STAMPED "82" SET N.W. OF THE INTERSECTION OF N. OSAGE DR. AND 46TH ST. N.

ADS MONUMENT #64
⅝" REBAR W/3" ALUMINUM CAP FLUSH SET IN CONCRETE STAMPED "64" SET N.W. OF THE INTERSECTION OF APACHE ST. AND UTICA AVE.

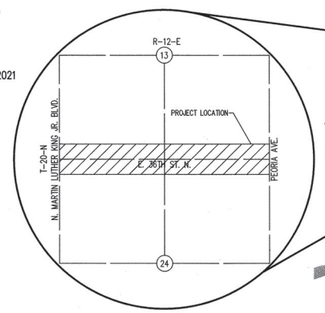



UTILITY COORDINATION BOX

DESCRIPTION	NUMBER	NOTIFIED
AT&T – AL NICHOLS	918-596-4237	
COX COMMUNICATION – BRANDON WADE	918-286-4716	
ONG – JONATHON MEADOWS	918-831-8215	
AEP/PSO – ADAM FIELDS	918-250-6257	
CITY OF TULSA UTILITY COORDINATOR – CHRIS KOVAC	918-596-9649	
MTTA – ERIC SMITH	918-830-0024	
WATER DESIGN	918-596-9580	
WASTEWATER DESIGN	918-596-9564	
TRANSPORTATION DESIGN	918-596-9636	
TRAFFIC ENGINEERING DESIGN	918-596-9749	
STORMWATER DESIGN	918-596-9498	
COT IT NETWORK SERVICES	918-596-7070	

CURRENT CITY OF TULSA STANDARD SPECIFICATIONS AND STANDARD DETAILS APPLY TO THE PROJECT. ALL OTHER CONSTRUCTION MATERIALS SHALL BE IN ACCORDANCE WITH 2019 OKLAHOMA STANDARD SPECIFICATIONS FOR HIGHWAY CONSTRUCTION.
THIS PROJECT COMPLIES WITH ALL OKLAHOMA DEPARTMENT OF ENVIRONMENTAL QUALITY (ODEQ) REQUIREMENTS.
PROJECT IS LOCATED WITHIN THE CORPORATE LIMITS OF THE CITY OF TULSA.

INDEX TO DRAWINGS

SHEET NO.	DESCRIPTION
1	COVER SHEET
2-3	PAY ITEM NOTES
4	SUMMARY OF QUANTITIES (ROADWAY)
5	GENERAL CONSRUCTION NOTES
6	SUMMARY OF PAY QUANTITIES AND NOTES (TRAFFIC)
7-9	SUMMARY OF PAY QUANTITIES AND NOTES (WATERLINE)
10-12	SUMMARY SHEETS
13-15	TYPICAL SECTIONS
16-18	RIGHT-OF-WAY PLANS
19-21	PROPOSED RIGHT-OF-WAY PLANS
22-24	SURVEY CONTROL DATA
25	DRAINAGE MAP
26-28	STORM SEWER INLET DESIGN AND SUMMARY DETAILS
29	STORM WATER MANAGEMENT PLAN
30-33	EROSION CONTROL PLANS
34-35	STREET REPAIR KEY MAP
36-41	GEOMETRIC DATA
42-47	DEMOLITION PLANS
48-71	ROADWAY PLAN AND PROFILE AND CURB PROFILE
72-79	LANDSCAPING PLANS AND DETAILS
80-82	RETAINING WALL A PLAN & PROFILE AND DETAILS
83-88	WATERLINE PLAN & PROFILE
89-93	MARKING & SIGNING PLANS & DETAILS
94-100	TRAFFIC SIGNAL PLANS
101-103	INTERSECTION DETAILS
104	SEQUENCE OF CONSTRUCTION
105-114	TRAFFIC CONTROL PLANS
115-165	CROSS SECTIONS

CITY OF TULSA STANDARDS

- Std. 102 – Project Sign
- Std. 126 – Standard Silt Fence, and Construction Entrance
- Std. 304 – Bedding Detail – Rigid Pipe
- Std. 305 – Bedding Detail – Semi Rigid Pipe
- Std. 306 – Trench Detail Construction Adjacent to Roadway
- Std. 309 – Fire Hydrant
- Std. 312 – Frame and Lid for Water Vaults
- Std. 313 – Valve Box
- Std. 315 – Trust Block and Trench Conditions
- Std. 330 – Cathodic Protection
- Std. 401 – Manhole Grade Adjustment
- Std. 501 – Meter Settings for 5/8"x3/4" and 3/4" Water Service
- Std. 502 – Meter Settings for 1" Water Service
- Std. 503 – Meter Settings for 1–1/2" Water Service
- Std. 505 – Meter Can with Rim and Lid for 5/8" x 3/4" and 1" Water Meter Can Installation
- Std. 601 – Pull Box Installation
- Std. 602 – Conduit Installation
- Std. 603 – Signal Pole Footing Details
- Std. 606 – Emergency Pre-emption Detail
- Std. 607A – Traffic Signal Pole and Service to Signal
- Std. 607B – Traffic Signal Pedestal Service
- Std. 608A – Street Name Signs
- Std. 608B – Traffic Signs
- Std. 610A – 332 Controller Cabinet Detail
- Std. 610C – 332 Cabinet Wiring
- Std. 611A – Pole Wiring Detail
- Std. 612 – Cabinet Guard Detail
- Std. 613 – Pedestal and Mast Arm Pole Details
- Std. 614A – Traffic Signals and Accessories
- Std. 614B – Signal Head Wiring
- Std. 616 – Mast Arm Brackets
- Std. 617A – Signal Poles and Mast Arms
- Std. 617B – Single Mast Arm Details
- Std. 618 – Bonding Diagram
- Spec. Sect. 625 – Removal of Traffic Items
- Std. 701 – Residential Concrete Driveway Concrete Street
- Std. 706 – Commercial Driveway
- Std. 707 – Commercial Driveway
- Std. 709 – Parking Lots
- Std. 713 – Pavement Removal and Replacement
- Std. 714 – Pavement Cuts
- Std. 725 – Standard Pavement Patch and Repair
- Std. 727 – Concrete Pavement Standard Details for Residential and Collector Streets (1 of 2)
- Std. 729 – Concrete Pavement Standard Details for Residential and Collector Streets (2 of 2)
- Std. 730 – Standard Asphalt Pavement Cut and Repair
- Std. 733 – Standard Pavement Rehabilitation for Utility Construction
- Std. 751 – Pipe Bedding Detail for Storm Sewer
- Std. 753 – Frame and Lid for Stormwater Manholes
- Std. 754 – Frame and Lid for 6' and 8' I.D. Storm Sewer Manhole and Junction Boxes
- Std. 755 – Configurations of Cast Iron Curb Inlets
- Std. 764 – Standard Reinforced Concrete Stormwater Inlets
- Std. 765 – Standard Stormwater Frames
- Std. 766 – Standard Stormwater Grates
- Std. 767 – Standard Cast Iron Curb
- Std. 775 – Standard Precast Concrete Stormwater Manhole
- Std. 790 – Standard Sidewalk Ramp

ODOT STANDARDS (ROADWAY)

LECS-4-2	TSC1-3-2
LTU-4-0	TSC2-3-2
PCES-4-1	TSD-2-0
SSCD-3-1	TWD1-1
SSS-1-1	WCR-3-1

ODOT STANDARDS (TRAFFIC)

TCS1-1-01	TCS14-1-00	WSD1-1-00
TCS2-1-00	TCS16-1-00	WSD3-1-00
TCS3-1-01	TCS19-1-01	SZSD1-1-00
TCS4-1-01	TCS20-1-00	SBS1-1-00
TCS5-1-00	TCS21-1-02	SBS2-1-00
TCS6-1-02	PM1-1-03	
TCS7-1-02	PM6-1-00	
TCS8-1-00	RSD1-1-00	
TCS9-1-01	RSD2-1-00	



APPROVED BY:

CITY ENGINEER — DATE 10.19.20

ADVERTISEMENT DATE: 10.30.20

ENGINEER'S CERTIFICATION — DATE 7/19/2020
JASON DICKMAN, P.E.
OK P.E. NO. 27639



07/19/2020

COT PROJ. NO. 144200 ARTERIAL STREET REHABILITATION AND WATERLINE REPLACEMENT FOR TMUA-W 15-04 AND STORMWATER IMPROVEMENTS FOR SWD 10669

Saved 07-15-2020 7:57:01 PM by JASON.DICKMAN
Plot Scale 1:1 07-19-2020 9:01:22 PM by JASON.DICKMAN_PE
U:\Jobs\2015\15440\000\Main-Trans\Drawings\Plans\1_TITLE SHEET

ROADWAY PAY ITEM NOTES (NOV. 2018):

E-1: ALL COSTS FOR REMOVING TREES, SHRUBS, STUMPS, POSTS, AND ALL OTHER DEBRIS AND/OR OBSTRUCTIONS NOT COVERED BY A SEPARATE PAY ITEM ARE INCLUDED IN THE PRICE BID.

E-2: ALL EXISTING DRAINAGE STRUCTURES SHALL BE CLEANED AND CLEARED OF ALL SEDIMENTATION AND DEBRIS TO THE RIGHT OF WAY. COST OF CLEARING SHALL BE INCLUDED IN THE PRICE BID.

E-3: THE CONTRACTOR SHALL BE PAID FOR UNCLASSIFIED EXCAVATION ON THE BASIS OF PLAN QUANTITY. ANY ADDITIONAL EXCAVATION REQUIRED OR OVERRUN OF PLAN QUANTITY WILL BE PAID FOR ON THE BASIS OF UNIT PRICE BID FOR THE ITEM. CONTRACTOR SHALL BE RESPONSIBLE FOR PROVIDING ADEQUATE SURVEY TO VERIFY ANY ADDITIONAL QUANTITIES.

E-4: UNCLASSIFIED EXCAVATION INCLUDES REMOVAL OF AGGREGATE BASE AND MODIFIED SUBGRADE UNDER EXISTING PAVEMENT TO BE REPAIRED.

E-5: THIS QUANTITY INCLUDES AN ADDITIONAL 5% ABOVE PLAN QUANTITY FOR UNDERCUTTING OF UNSUITABLE SUBGRADE MATERIAL OR ADDITIONAL PATCHING AS DIRECTED BY THE ENGINEER.

E-6: THE CONTRACTOR SHALL BE RESPONSIBLE FOR CONTROL AND MAINTENANCE OF THE STORM WATER DRAINAGE FROM THE CONSTRUCTION SITE. STORM WATER PONDING ON THE CONSTRUCTION SITE THAT IS THE RESULT OF CONSTRUCTION WILL NOT BE ALLOWED. ALL COST ASSOCIATED WITH STORM WATER MANAGEMENT, AS WELL AS REMOVAL OF ALL SILT AND DEBRIS FROM ALL DRAINAGE STRUCTURES, STORM SEWER PIPES AND APPURTENANCES WITHIN THE PROJECT LIMITS AT END OF PROJECT, SHALL BE INCLUDED IN THE UNIT PRICE BID FOR THIS ITEM.

E-7: EROSION PROTECTION SHALL BE PLACED AS FOLLOWS:

A) AROUND INLETS TO PREVENT INFLOW OF ERODED MATERIAL INTO STORM SEWER SYSTEM;

B) IN LOCATIONS THROUGHOUT PROJECT SITE, AS DETERMINED BY THE ENGINEER, TO PREVENT WASH OF ERODED MATERIAL ONTO ADJACENT PROPERTY;

C) FOR ENTIRE DURATION OF PROJECT, WITH MAINTENANCE AND REPLACEMENTS, AS DIRECTED BY THE ENGINEER;

D) WITH PERIODIC REMOVAL OF SEDIMENT IN ACCORDANCE WITH STORMWATER MANAGEMENT PLAN.

ALL COST FOR ITEMS A-D ABOVE SHALL BE INCLUDED IN UNIT PRICE BID FOR THIS ITEM.

E-8: PRICE BID SHALL INCLUDE MAINTENANCE, SEDIMENT REMOVAL, DISPOSAL, AND REMOVAL OF FILTERS AT PROJECT COMPLETION.

E-9: INCLUDES 23 TYPE I-A FILTERS.

E-10: ESTIMATED QUANTITY IS BASED ON SODDING OF ALL DISTURBED AREAS OUTSIDE THE FINAL PAVING LIMITS AND WITHIN THE FINAL GRADING LIMITS AS INDICATED BY THE TOP-OF-CUT/TOE-OF-SLOPE LINE ON THE PLANS (EXCLUDING SURFACES OF STRUCTURES, FIXTURES AND APPURTENANCES). SOD SHALL BE OF LIKE-KIND TO EXISTING SOD. PRICE BID INCLUDES PLACEMENT AND COMPACTION OF SUITABLE BACKFILL. ANY EXISTING GRASSED AREAS BEYOND THE ABOVE STATED LIMITS THAT ARE DAMAGED AS A RESULT OF CONSTRUCTION OPERATIONS SHALL BE RESODDED TO THE SATISFACTION OF THE ENGINEER AT THE CONTRACTOR'S SOLE EXPENSE.

E-11: COST OF WATERING AND FERTILIZING SHALL BE INCLUDED. FERTILIZERS SHALL BE 10-20-10 AND SHALL BE APPLIED AT THE RATE OF 1.5 LBS PER 10 SQ YDS. FERTILIZER SHALL BE APPLIED PER SECTION 230.04H OF ODOT STANDARD SPECIFICATIONS. WATERING SHALL BE APPLIED AS NECESSARY UNTIL VEGETATION IS ESTABLISHED OR UNTIL THE WORK IS ACCEPTED AS COMPLETE.

SURFACING / STRUCTURES (S1 - S21)

S-1: TYPE A AGGREGATE BASE WAS ESTIMATED TO BE USED AS THE BASE MATERIAL FOR 90% OF THE PATCHING. QUICK SET FLOWABLE FILL WAS ESTIMATED TO BE USED AS THE BASE MATERIAL FOR 10% OF THE PATCHING. ACTUAL QUANTITIES TO BE DETERMINED BY THE ENGINEER.

S-2: INCLUDES COMPACTION OF AGGREGATE TO 98% AASHTO T180 MODIFIED PROCTOR.

S-3: SEPARATOR FABRIC SHALL BE USED AT ALL PAVEMENT PATCHES AND RECONSTRUCTION SECTIONS. THE SEPARATOR FABRIC SHALL BE CUT AND OVERLAPPED A MINIMUM OF 2 FT AT ALL EDGES OF THE REPAIR.

S-4: FABRIC REINFORCEMENT SHALL BE USED ON OVERLAY AREAS. THE COST OF BITUMINOUS BINDER FOR FABRIC REINFORCEMENT SHALL BE INCLUDED IN THE UNIT COST OF THIS PAY ITEM. THE BITUMINOUS BINDER SHALL MEET ODOT STANDARD SPECIFICATIONS AND THE RECOMMENDATIONS OF THE FABRIC REINFORCEMENT MANUFACTURER.

S-5: THE COST OF TACK COAT, EDGE JOINT SEAL MATERIAL AND SCREENINGS FOR BLOTTING, AND ALL LABOR ASSOCIATED WITH THESE ITEMS, SHALL BE INCLUDED IN ASPHALT CONCRETE.

S-6: ESTIMATED AT 112 LBS PER SQ YD PER 1 INCH THICK.

S-7: ODOT PAY FACTOR FOR AVERAGE LOT DENSITY SHALL NOT BE USED FOR THIS PROJECT. FAILURE TO REACH AVERAGE LOT DENSITY OF 92%-97% WILL RESULT IN REJECTION OF WORK.

S-8: A HIGHER GRADE OF ASPHALT BINDER THAN IS INDICATED ON THE PLANS MAY BE USED, BUT AT NO ADDITIONAL COST TO THE CITY.

S-8 (TABLE):

NOTE S-8 (50) TABLE

BINDER[2] GRADE	MESALs	ADT[1]	NOTES
	< 3	< 5,000	USE WHEN MORE THAN 4-6 INCHES BELOW THE SURFACE. ALSO USE FOR SHOULDERS, DRIVEWAYS, BELOW PCC, AND TEMPORARY CONSTRUCTION.
PG 70-28 OK	< 10	< 10,000	USE ONLY IN THE TOP 4-6 INCHES FOR DRIVING LANES.
PG 76-28 OK	>= 10	>= 10,000	USE ONLY IN THE TOP 4-6 INCHES FOR DRIVING LANES.
PG 76-28 E	—	—	CONTACT ODOT MATERIALS DIVISION FOR RECOMMENDED USE.
[1] USE ADT ONLY WHEN ESAL COMPUTATIONAL DATA IS NOT AVAILABLE. CALCULATE THE DESIGN ESALs BASED ON 20 YEARS.			
[2] PG 70-28 OK OR PG 76-28 OK MAY BE DESIRABLE IN HIGH VOLUME AREAS WHERE SLOW, STANDING, OR TURNING TRAFFIC OCCURS, SUCH AS URBAN INTERSECTIONS OR OFF-RAMPS. OFF RAMPS SHOULD AT LEAST USE THE SAME BINDER AS THE MAINLINE.			

S-9: THIS ITEM INCLUDES ALL COSTS ASSOCIATED WITH COLD MILLING AND TO PROVIDE BUTT JOINTS AS REQUIRED. NO ADDITIONAL PAYMENT SHALL BE MADE FOR COLD MILLING BEYOND THE AVERAGE DEPTH SHOWN ON THE TYPICAL SECTIONS.

S-10: FOR P.C. CONCRETE TYPICAL SECTIONS, CONTRACTOR MAY SUBSTITUTE INTEGRAL CURB FOR CURB & GUTTER, AND VICE VERSA, ONLY WITH APPROVAL OF THE ENGINEER, WITH NO ADJUSTMENT MADE TO UNIT PRICE OR QUANTITY.

S-11: CONCRETE PAVEMENT SHALL BE COMPLETE IN PLACE. NO PARTIAL OR FINAL PAYMENT SHALL BE MADE UNTIL PAVEMENT HAS BEEN SAWED AND SEALED. ANY SECTIONS OF PAVEMENT WITH UNAPPROVED DEVIATIONS FROM THE JOINT LAYOUT PROVIDED IN THE PLANS MAY BE REJECTED AT THE DISCRETION OF THE ENGINEER.

S-12: THE USE OF FLY-ASH IN CONCRETE IS PROHIBITED.

S-13: INCLUDES ALL COST OF SAWED JOINTS AND SEALING OF ALL JOINTS INCLUDING LONGITUDINAL JOINTS.

S-14: UNIT PRICE SHALL INCLUDE COST OF ALL MATERIAL, LABOR, AND EQUIPMENT REQUIRED TO CONSTRUCT WALL PER MANUFACTURER'S RECOMMENDATIONS.

S-15: THIS ITEM SHALL BE MEASURED AS THE ACTUAL AMOUNT OF CURB AND/OR GUTTER INSTALLED. NO PAYMENT WILL BE MADE FOR CURB AND/OR GUTTER THROUGH DRIVEWAYS AND INLETS.

S-16: CURB, GUTTER, AND/OR SIDEWALK ASSOCIATED WITH THE DRIVEWAY AND THROUGH THE DRIVEWAY IS INCLUDED IN THE COST OF THE DRIVEWAY.

S-17: ONE SIDEWALK PANEL ON EACH SIDE OF DRIVEWAYS SHALL BE A MINIMUM OF 6" THICK OR MATCH EXISTING DRIVEWAY THICKNESS, WHICHEVER IS GREATER. NO ADDITIONAL PAYMENT SHALL BE MADE FOR THE COST OF THE THICKENED SIDEWALK THROUGH THIS AREA.

S-18: STAMPED CONCRETE SIDEWALK SHALL BE INSTALLED WITH RUNNING BOND BRICK PATTERN. COLOR SHALL BE INTEGRAL AND MATCH HUE WITH FEDERAL STANDARD AMS-595 # 21105 (RED), OR APPROVED EQUAL. PAINTING OF STAMPED CONCRETE IS PROHIBITED AND WILL RESULT IN REJECTION OF WORK PRODUCT. CONTRACTOR SHALL PROVIDE A 1'X1'X4" TEST SQUARE FOR APPROVAL BY ENGINEER PRIOR TO INSTALLATION, WITH ALL COST INCLUDED IN UNIT PRICE BID FOR STAMPED CONCRETE SIDEWALK.

S-19: STANDARD BEDDING MATERIAL TO BE TYPE A AGGREGATE BASE COMPACTED TO 95% STANDARD PROCTOR DENSITY (AASHTO T-99). TYPE A AGGREGATE BASE IN THE ROADWAY SHALL BE COMPACTED TO 98% MODIFIED PROCTOR (AASHTO T-180).

S-20: QUANTITY SHALL BE MEASURED AND PAID FOR AS FOLLOWS:

A. FOR ANY CAST-IN-PLACE OR PRECAST REINFORCED CONCRETE BOX (RCB) LARGER THAN 4' BY 4', USE NEAT LINES THAT ARE 4" BELOW THE BOTTOM OF THE RCB AND 4'-0" BEYOND THE OUTSIDE WALL.

B. UNDER ROADWAY PAY QUANTITY SHALL BE PAID FOR FROM THE BOTTOM OF TRENCH, AS DESCRIBED, TO THE BOTTOM OF ROADWAY AGGREGATE BASE.

S-21: THIS PAY ITEM INCLUDES THE FOLLOWING:

A. SAW CUTTING
B. REMOVAL OF THE EXISTING CONCRETE AND/OR ASPHALTIC CONCRETE ROADWAY (CY)
C. TYPE S3 ASPHALTIC CONCRETE OR PC CONCRETE COMPLETE AND IN PLACE PER DETAIL
D. SEALING OF EDGES AND TACK COAT

DOES NOT INCLUDE THE FOLLOWING:

A. UNCLASSIFIED EXCAVATION
B. SUBGRADE METHOD B (SY)
C. SEPARATOR FABRIC (SY)
D. AGGREGATE BASE (TYPE A)
E. ASPHALT CONCRETE LEVELING OR SURFACE COURSE

REMOVAL / ADJUSTMENT (R1 - R6)

R-1: WASTE MATERIAL TO BECOME THE PROPERTY OF THE CONTRACTOR AND SHALL BE REMOVED FROM THE SITE IN A MANNER APPROVED BY THE ENGINEER.

R-2: ALL SAW CUTTING AND REMOVAL SHALL BE INCLUDED IN THE COST OF THE ITEM TO BE ADJUSTED, REMOVED, REPAIRED, OR REPLACED.

R-3: PAY ITEM INCLUDES REMOVAL OF ALL STRUCTURES AND OBSTRUCTIONS WITHIN PROJECT LIMITS NOT SPECIFIED BY OTHER ITEMS OF WORK.

R-4: INCLUDES SAWING NOT INCLUDED IN OTHER ITEMS OF WORK.

R-5: ITEMS TO BE REMOVED MAY OR MAY NOT BE PRESENT IN ANY SPECIFIED CONDITION.

R-6: SHALL INCLUDE ALL COSTS ASSOCIATED WITH PLUGGING/ PATCHING HOLES IN EXISTING STRUCTURES TO REMAIN.

BEFORE YOU DIG 811 1-800-522-OKIE CALL OKIE

LICENSED PROFESSIONAL ENGINEER JASON P. DICKMAN 27639 OKLAHOMA
07/19/2020

REVISION	BY	DATE

ROADWAY PAY ITEM NOTES

PROJECT NO. 144200

ARTERIAL STREET REHABILITATION AND WATERLINE REPLACEMENT - 36TH ST. N. - MLK BLVD TO PEORIA AVE.

CITY OF TULSA, OKLAHOMA
ENGINEERING SERVICES DEPARTMENT

PLANS AND ESTIMATES PREPARED BY: PEC PROFESSIONAL ENGINEERING CONSULTANTS, P.A. 1924 S. UTICA AVE., SUITE 1400 TULSA, OK 74104 918-664-5400 www.pec1.com

DRAWN	BFS	01/2020	APPROVED:
DESIGNED	JPD	01/2020	
SURVEY			
PROJ. MGR.	AG	07/20	
LEAD ENGR.	JD	7/20	
FIELD MGR.	RW	8/20	
RECOMMENDED: DESIGN MANAGER	MB	9.20	CITY ENGINEER

FILE: DRAWING: DATE: 10/30/20

ATLAS PAGE NO: 218, 219, 281, 282 SHEET 2 OF 165 SHEETS

$TIME$ $DATE$ $SCALE$ SCALE: $USER$ PLOTTED BY: DSNG: XXX $FILE$

GENERAL (G1 – G10)

G–1: LOCATIONS TO BE DETERMINED IN THE FIELD AND WORK TO BE PERFORMED AT THE DIRECTION OF THE FIELD ENGINEER. QUANTITY IS ESTIMATED AND MAY BE OMITTED IN ITS ENTIRETY.

G–2: MAXIMUM OVERALL DOLLAR AMOUNT AND SCHEDULE OF PAYMENTS SHALL BE IN ACCORDANCE SECTION 641 OF THE OKLAHOMA DEPARTMENT OF TRANSPORTATION STANDARD SPECIFICATIONS, CURRENT EDITION.
EXCLUDES MOBILIZATION FOR WATERLINE WORK.

G–3: CONSTRUCTION STAKING SHALL INCLUDE SURVEYING AND THE FURNISHING, PLACING, AND MAINTAINING OF THE CONSTRUCTION LAYOUT STAKES NECESSARY FOR THE PROPER COMPLETION AND INSPECTION OF THE ENTIRE PROJECT.

G–4: THE COST TO REPLACE REMOVED OR DAMAGED SECTION CORNERS AND ALL OTHER PERMANENT RIGHT OF WAY MARKERS SHALL BE INCLUDED IN THE PRICE BID FOR THIS ITEM. NO ADDITIONAL PAYMENT WILL BE MADE.

G–5: CONTRACTOR SHALL REPAIR ANY IRRIGATION SYSTEMS DAMAGED OR REQUIRING RELOCATION DURING THE CONSTRUCTION OF THIS PROJECT TO THE SATISFACTION OF THE PROPERTY OWNER AND CITY ARBORIST. COST SHALL BE INCLUDED IN THE PRICE BID.

G–6: ALL HOUSE NUMBERS SHALL BE REPLACED/ REESTABLISHED THROUGHOUT PROJECT LIMITS. COST TO BE INCLUDED IN URBAN RIGHT OF WAY RESTORATION. CONTRACTOR SHALL REESTABLISH DRAINS, ROOF DRAINS AND OTHER DRAINAGE THROUGH THE CURBS IN ACCORDANCE WITH CITY OF TULSA STANDARD 758. NO NEW CURB OUTLETS SHALL BE CONSTRUCTED WITHOUT APPROVAL OF THE ENGINEER.

G–7: AN INTERNATIONAL SOCIETY OF ARBORICULTURE (ISA) CERTIFIED ARBORIST SHALL OVERSEE ALL PLANTINGS AND/OR REMOVAL OF TREES. CONTACT CITY ARBORIST TO ACCEPT FINAL PLANTINGS.
CONTACT #: 918–596–2548

G–8: TREE GRATES ARE NOT ACCEPTABLE PER CITY ARBORIST. CONCRETE PAVERS ARE TO BE USED AS NECESSARY AROUND TREES.

G–9: CONTRACTOR SHALL COORDINATE WITH HOMEOWNERS TO RESET ALL PAVERS, LANDSCAPE STONE, PRIVATE SIDEWALKS AND FENCES THAT ARE DISTURBED DURING CONSTRUCTION OPERATIONS. ALL MATERIALS, LABOR, AND EQUIPMENT REQUIRED FOR RESETTING OF SUCH ITEMS IS TO BE INCLUDED IN PRICE BID FOR URBAN RIGHT OF WAY RESTORATION.

G–10: PAY ITEM INCLUDES ALL MOWING WITHIN THE RIGHT–OF–WAY AS DIRECTED DURING CONSTRUCTION.

DRAINAGE (D1 – D15)

D–1: THIS ITEM SHALL INCLUDE THE COST OF NEW MANHOLE FRAME AND COVER PER CITY OF TULSA STD NOS.752, 753, 754, 761, 762, 769A, 769B AND 775.

D–2: THE TOTAL COST FOR RUBBERIZED ASPHALT AND/OR SILICONE AT MANHOLES, VALVE BOXES, INLETS, AND INLET APRONS, SHALL BE INCLUDED.

D–3: NO MASONRY STRUCTURES SHALL BE CONSTRUCTED WITHIN THE RIGHT OF WAY.

D–4: ADDITIONAL DEPTH IN A MANHOLE SHALL BE MEASURED FROM 6FT AS MEASURED FROM THE TOP OF RIM TO THE LOWEST FLOWLINE.

D–5: ALL MANHOLES SHALL BE COMPLETE IN PLACE. THIS PAY ITEM INCLUDES FRAME, COVER, CONCRETE AND ALL OTHER INCIDENTALS REQUIRED FOR PLACEMENT.

D–6: ALL SANITARY AND STORM SEWER MANHOLE CASTINGS AND LIDS THAT ARE LOCATED IN THE STREET AND ARE DISTURBED BY THE CONTRACTOR SHALL BE REPLACED WITH NEW LIDS AND CASTINGS AND THE OLD ONES SHALL BE SALVAGED AND DELIVERED TO THE METAL RECYCLE BINS IN THE STOCKROOM AREA AT SEWER OPERATIONS AND MAINTENANCE, 9319 E. 42ND STREET NORTH, BETWEEN THE HOURS OF 7:30 AM AND 3:00 PM MONDAY THROUGH FRIDAY.

D–7: INCLUDES THE COST REQUIRED TO MAKE CONNECTION AND REMOVAL OF EXISTING INLETS. THE COST OF PC CONCRETE CURB AND GUTTER THROUGH THE INLET, 5' EACH SIDE OF THE INLET, AND THE PC CONCRETE INLET APRON SHALL BE INCLUDED. GRATE AND FLOWLINE ELEVATIONS SHALL MATCH EXISTING CONDITIONS UNLESS OTHERWISE NOTED IN THE PLANS.

D–8: QUICKSET FLOWABLE FILL SHALL BE USED TO BACKFILL AROUND STREET CURB INLETS AND REINFORCED CONCRETE PIPE, AS NEEDED, AT THE DIRECTION OF THE ENGINEER.

D–9: ALL INLETS, COMPLETE IN PLACE, SHALL BE CAST IN PLACE CONCRETE OR PRECAST CONCRETE. THIS PAY ITEM INCLUDES ANY INLET FRAME(S), GRATE(S), HOOD(S) AND CONCRETE REQUIRED FOR COMPLETE INSTALLATION OF STRUCTURE PER THE CONSTRUCTION DOCUMENTS.

D–10: ADDITIONAL DEPTH QUANTITIES SHALL BE MEASURED AND PAID FOR ALL INLETS EXCEEDING STANDARD DEPTH. STANDARD DEPTHS ARE AS FOLLOWS:

A) CAST IRON CURB INLET: 3.71 VF, MEASURED FROM CENTER ELEVATION OF LOWEST CAST IRON CURB TO FLOWLINE OF OUTLET PIPE.
B) RECESSED CURB INLET: 3.00 VF, MEASURED FROM TOP OF SLAB TO FLOWLINE OF OUTLET PIPE.
C) STANDARD DROP INLET: SEE STANDARD DETAILS 770, 771, 772 AND 773 – VARIES BASED ON PIPE SIZE, MEASURED FROM LOWEST ELEVATION OF INFLOW APRON TO FLOWLINE OF OUTLET PIPE.

D–11: CAST IRON CURB INLET CONFIGURATION NAMING CONVENTION PROVIDED IN COT STANDARD NO. 755. SEPARATE DETAILS SHALL BE REFERENCED OR PROVIDED IN THE PLANS FOR NON–CITY–STANDARD INLETS.

STANDARD NAMING: CICI DES G(T) [W/AMH]

G: NUMBER OF GRATES.

T: LETTER(S) CORRESPONDING TO ARRANGEMENT OF CAST IRON HOODS TO BE INSTALLED UPSTREAM OF GRATES.

W/AMH: IF SHOWN, INLET TO BE CONSTRUCTED WITH ATTACHED ACCESS MANHOLE.

D–12: REINFORCED CONCRETE PIPE TO BE CLASS III. ALL REINFORCED CONCRETE PIPE AND MANHOLES TO BE SUPPLIED WITH AN OMNI–FLEX JOINT GASKET OR APPROVED EQUAL. MASTIC JOINT SEALANT SHALL NOT BE ALLOWED.

D–13: THIS PAY ITEM SHALL BE COMPLETE IN PLACE AND SHALL INCLUDE ALL PIPE, STANDARD BEDDING MATERIAL AND TRENCH EXCAVATION, JOINT GASKETS AND ALL OTHER INCIDENTALS. NO ADDITIONAL COST WILL BE MADE. PRIOR TO ACCEPTANCE, INTERIOR OF PIPE SHALL BE INSPECTED FOR DEFECTS USING SELF–PROPELLED MOBILE CLOSED–CIRCUIT CAMERA SYSTEM.

D–14: WHERE CORRUGATED POLYPROPYLENE PIPE CONNECTS TO REINFORCED CONCRETE STRUCTURES, CONTRACTOR SHALL ENSURE CONNECTIONS ARE WATER–TIGHT AND FULLY SEALED AGAINST SOIL INFILTRATION.

D–15: WHERE QUICKSET FLOWABLE FILL IS USED TO BACKFILL AROUND CORRUGATED POLYPROPYLENE PIPE, THE CONTRACTOR SHALL UTILIZE AN ANCHORING SYSTEM APPROVED BY THE ENGINEER PRIOR TO INSTALLATION. ALL COSTS FOR LABOR, EQUIPMENT AND MATERIALS REQUIRED TO IMPLEMENT APPROVED ANCHORING SYSTEM INCLUDED IN PRICE BID FOR CORRUGATED POLYPROPYLENE PIPE.

TRAFFIC (T1 – T7)

T–1: ALL TRAFFIC MATERIALS REMOVED SHALL BE HANDLED PER COT SPECIFICATION 625 REMOVAL OF TRAFFIC ITEMS.

T–2: REFLECTORIZED SHEETING ON SIGNS AND BARRICADES SHALL BE OF A CUBIC PRISMATIC TYPE AND SHALL MEET THE SPECIFICATIONS ESTABLISHED FOR ASTM D 4956–01 TYPE IX RETROREFLECTIVE SHEETING. REFLECTORIZED SHEETING ON DRUMS AND TUBE CHANNELIZERS SHALL BE OF A HIGH–INTENSITY TYPE AND SHALL MEET THE SPECIFICATIONS ESTABLISHED FOR ASTM D 4956–01 TYPE III RETROREFLECTIVE SHEETING.

T–3: ALL PLASTIC PAVEMENT MARKINGS SHALL BE:

EXTRUDED–APPLIED THERMOPLASTIC (USE ON ASPHALT & CONCRETE PAVEMENT). THERMOPLASTIC PAVEMENT MARKINGS SHALL ONLY BE APPLIED WHEN THE SURFACE TEMPERATURE EXCEEDS 55°F FOR ALL OF THE SIX HOURS PRIOR TO INSTALLATION AND MAXIMUM WIND GUSTS ARE BELOW 15 MPH AT THE TIME OF APPLICATION. PRICE BID TO INCLUDE FLEX TABS OR LIKE KIND FOR POST CONSTRUCTION LANE MARKING/SEPARATION. MECHANICALLY APPLIED PREFORMED PLASTIC TAPE ("COLD TAPE") WILL NOT BE ACCEPTED.

T–4: PAYMENT SHALL BE MADE ON A SIGN–DAY BASIS ONLY FOR TRAFFIC CONTROL DEVICES THAT ARE PROPERLY INSTALLED AND IN GOOD WORKING ORDER. COSTS FOR DELIVERY, INSTALLATION, RELOCATION, MAINTENANCE REMOVAL AND REPLACEMENT, AS NEEDED AT THE DISCRETION OF THE ENGINEER, INCLUDED IN UNIT PRICE BID.

T–5: IF WARNING LIGHTS ARE TO BE USED ON TRAFFIC CONTROL DEVICES, TYPE "A" LIGHTS SHALL ONLY BE USED ON DEVICES WARNING OF UNEXPECTED HAZARDS, AND SHALL NOT BE USED FOR DELINEATION OF THE TRAVELED WAY. ONLY TYPE "C" WARNING LIGHTS SHALL BE USED FOR DELINEATION OF THE TRAVELED WAY, AND TYPE "C" LIGHTS SHALL NOT BE USED FOR ANY OTHER PURPOSE.

T–6: THE PAY ITEM FOR FLAGGER SHALL BE PAID FOR ON A FLAG DAY (F.D.) BASIS. ONE F.D. IS ONE COMPLETE WORKDAY PERFORMED BY THE CONTRACTOR AS SET FORTH IN THE CONTRACT DOCUMENTS AND SPECIFICATIONS.

T–7: PRICE BID FOR THIS ITEM INCLUDES INSTALLATION, MAINTENANCE AND SUBSEQUENT REMOVAL OF PROJECT SIGN.

PLANTING (P1 – P10)

P–1: INCLUDES AN ADDITIONAL 5% QUANTITY OVER THE PLAN AREA TO ACCOUNT FOR WASTE, TOPOGRAPHIC CHANGE, ETC. ALL DISTURBED AREAS OUTSIDE WHAT IS SHOWN ON THE PLANS SHALL BE RETURNED TO THEIR ORIGINAL CONDITION AT CONTRACTOR'S EXPENSE.

P–2: BID PRICE SHALL INCLUDE ALL LABOR, MATERIALS, EQUIPMENT AND INCIDENTALS TO INSTALL PAY ITEM AS SHOWN IN PLANTING DETAILS ON SHEET LANDSCAPE DETAILS (1). BID PRICE SHALL INCLUDE BUT NOT BE LIMITED TO ALL FERTILIZING AND INITIAL WATERING AT INSTALLATION.

P–3: BID PRICE SHALL INCLUDE ALL LABOR, MATERIALS, EQUIPMENT AND INCIDENTALS TO INSTALL COMMERCIAL GRADE MODEL 1007–6, THREE SIXTEENTH BY SIX INCH (3/16"X6") STEEL, WITH TAPERED STAKES, SIXTEEN (16") LONG AND 4 STAKES PER 10' LENGTH, AS MANUFACTURED BY COL–MET (WWW.COLMET.COM), OR APPROVED EQUAL. COLOR SHALL BE BLACK.

P–4: BID PRICE SHALL INCLUDE ALL LABOR, MATERIALS, EQUIPMENT AND INCIDENTALS TO INSTALL CYPRESS MULCH. THIS QUANTITY INCLUDES CYPRESS MULCH AT A 3" DEPTH AT ALL PLANTING BED AREAS. REFER TO 02950 TREES, SHRUBS AND GROUNDCOVER SPECIFICATION FOR MORE INFORMATION.

P–5: BID PRICE SHALL INCLUDE ALL LABOR, MATERIALS, EQUIPMENT AND INCIDENTALS TO INSTALL BACK TO NATURE COMPOST. THIS QUANTITY INCLUDES 1/4 OF THE PLANTING MIX AT ALL MEDIANS TO A DEPTH OF 24".

P–6: BID PRICE SHALL INCLUDE ALL LABOR, MATERIALS, EQUIPMENT AND INCIDENTALS TO INSTALL SANDY LOAM TOPSOIL. THIS QUANTITY INCLUDES 3/4 OF THE PLANTING MIX AT ALL MEDIANS TO A DEPTH OF 24" AND ALSO ALL SOLID SLAB SOD LOCATIONS TO A DEPTH OF 2".

P–7: REFER TO 02950 TREES, SHRUBS AND GROUNDCOVER SPECIFICATION FOR MORE INFORMATION.

P–8: BID PRICE SHALL INCLUDE ALL LABOR, MATERIALS, EQUIPMENT AND INCIDENTALS TO REMOVE THE EXISTING SOIL FROM THE MEDIANS. EXCAVATION IS FIGURED FOR 1'–7" DEPTH FROM EXISTING GRADE.

P–9: BID PRICE SHALL INCLUDE ALL LABOR, MATERIALS, EQUIPMENT AND INCIDENTALS TO INSTALL BUFFALO SOD. SOLID SLAB SODDING ('CODY' BUFFALO) PAY ITEM ALSO INCLUDES ALL WATERING AND FERTILIZING UNTIL FINAL ACCEPTANCE. INITIAL FERTILIZER SHALL BE 1 POUND OF NITROGEN PER 1,000 SQUARE FEET. AFTER INITIAL FERTILIZATION, BUFFALO GRASS REQUIRES 1 OR 2 POUNDS OF NITROGEN PER 1,000 SQUARE FEET PER YEAR. SELECT A FERTILIZER WITH A NITROGEN–TO–PHOSPHORUS–TO–POTASSIUM (N–P–K) RATIO OF 3–1–2 OR 4–1–2 AND AT LEAST 35 PERCENT SLOW–RELEASE NITROGEN. APPLY FERTILIZER AT A RATE OF 1 POUND NITROGEN PER 1,000 SQUARE FEET IN JUNE AND AGAIN IN LATE JULY OR EARLY AUGUST. WATERING SHALL BE 1–2" PER WEEK TO ESTABLISH IN WARM PERIODS (MID TO LATE MAY UNLESS IT HAS BEEN A DRY SPRING) AND THEN 1" EVERY TWO TO FOUR WEEKS THEREAFTER UNTIL FINAL ACCEPTANCE. COST SHALL ALSO INCLUDE ONE MOWING PRIOR TO PROJECT ACCEPTANCE. REFER TO 02930 LAWNS AND FINE GRADING FOR MORE INFORMATION.

P–10: BID PRICE SHALL INCLUDE ALL LABOR, MATERIALS, EQUIPMENT AND INCIDENTALS TO INSTALL BERMUDA SOD. SOLID SLAB SODDING ('U3' BERMUDA) PAY ITEM ALSO INCLUDES ALL WATERING AND FERTILIZING UNTIL FINAL ACCEPTANCE. INITIAL FERTILIZER SHALL BE 1 POUND OF NITROGEN PER 1,000 SQUARE FEET. AFTER INITIAL FERTILIZATION, BERMUDA GRASS REQUIRES 4 OR 5 POUNDS OF NITROGEN PER 1,000 SQUARE FEET PER YEAR. SELECT A FERTILIZER WITH A NITROGEN–TO–PHOSPHORUS–TO–POTASSIUM (N–P–K) RATIO OF 3–1–2 OR 4–1–2 AND AT LEAST 35 PERCENT SLOW–RELEASE NITROGEN. APPLY FERTILIZER AT A RATE OF 1.5 POUND NITROGEN PER 1,000 SQUARE FEET IN MARCH OR APRIL, AGAIN IN LATE JULY OR EARLY AUGUST, AND AGAIN IN LATE AUGUST OR EARLY SEPTEMBER. WATERING SHALL BE 1–2" PER WEEK TO ESTABLISH IN WARM PERIODS (MID TO LATE MAY UNLESS IT HAS BEEN A DRY SPRING) AND THEN 1" EVERY TWO TO FOUR WEEKS THEREAFTER UNTIL FINAL ACCEPTANCE. COST SHALL ALSO INCLUDE MOWING AS NEEDED PRIOR TO PROJECT ACCEPTANCE. REFER TO 02930 LAWNS AND FINE GRADING FOR MORE INFORMATION.

BEFORE YOU DIG 811 1-800-522-OKIE CALL OKIE

LICENSED PROFESSIONAL ENGINEER JASON P. DICKMAN 27639 OKLAHOMA
07/19/2020

REVISION	BY	DATE

ROADWAY PAY ITEM NOTES

PROJECT NO. 144200

ARTERIAL STREET REHABILITATION AND WATERLINE REPLACEMENT – 36TH ST. N. – MLK BLVD TO PEORIA AVE.

CITY OF TULSA, OKLAHOMA
ENGINEERING SERVICES DEPARTMENT

PLANS AND ESTIMATES PREPARED BY: PEC PROFESSIONAL ENGINEERING CONSULTANTS, P.A. 1924 S. UTICA AVE., SUITE 1400 TULSA, OK 74104 918-664-5400 www.pec1.com

DRAWN	BFS	01/2020	APPROVED:
DESIGNED	JPD	01/2020	
SURVEY			
PROJ. MGR.		07/20	
LEAD ENGR.		7/20	
FIELD MGR.		8/20	
RECOMMENDED: DESIGN MANAGER		9-20	CITY ENGINEER

FILE: DRAWING: DATE: 10/30/20

ATLAS PAGE NO: 218, 219, 281, 282 SHEET 3 OF 165 SHEETS

$TIME$ $DATE$ $SCALE$ SCALE: $USER$ PLOTTED BY: XXX DSNR: $FILE$

SCHEDULE OF PAY QUANTITIES (ROADWAY)

ITEM NO.	SPEC. NO.	ITEM	PAY ITEM NOTE	UNIT	QUANTITY
1	201(D)	SELECTIVE CLEARING	E-1, 2	ACRE	0.22
2	202(A)	UNCLASSIFIED EXCAVATION	E-3, 4, 5, R-1	CY	13757
3	221(C)	TEMPORARY SILT FENCE	E-7	LF	4425
4	221(D)	TEMPORARY SEDIMENT FILTER	E-7, 8, 9	EA	33
5	303(A)	AGGREGATE BASE TYPE A	E-5, S-1, 2	CY	8967
6	310(B)	SUBGRADE METHOD B	E-5	SY	20971
7	325	SEPARATOR FABRIC	E-5, S-3	SY	25958
8	414(B)	DOWEL JOINTED P.C.C. PAVEMENT (PLACEMENT)(9")	S-10, 11	SY	12587
9	414(G)	P.C. CONCRETE FOR PAVEMENT	S-10, 11, 12, 13	CY	3147
10	509(A)	CLASS A CONCRETE		CY	28
11	510(A)	RETAINING WALL	S-14	SY	153
12	601(A)	TYPE I PLAIN RIPRAP	E-5	TON	7
13	609(A)	CONCRETE CURB (8" BARRIER-INTEGRAL)	S-12, 13, 15, 16	LF	6662
14	609(B)	COMBINED CURB & GUTTER (6" BARRIER)	S-12, 13, 15, 16	LF	3034
15	609(B)	COMBINED CURB & GUTTER (8" BARRIER)	S-12, 13, 15, 16	LF	2105
16	610(A)	4" CONCRETE SIDEWALK	S-12, 13, 16, 17	SY	7173
17	610(A)	6" CONCRETE SIDEWALK	S-12, 13, 16, 17	SY	541
18	610(B)	6" CONCRETE DRIVEWAY (H.E.S.)	S-12, 13, 16, 17	SY	3842
19	610(I)	TACTILE WARNING DEVICE		SF	520
20	611(G)	INLET, DESIGN NO. 2 (B), COMPLETE IN PLACE	D-2, 3, 7, 8, 9, 10, 11	EA	6
21	611(G)	INLET, DESIGN NO. 2 (C), COMPLETE IN PLACE	D-2, 3, 7, 8, 9, 10, 11	EA	1
22	611(G)	INLET, DESIGN NO. 2 (D), COMPLETE IN PLACE	D-2, 3, 7, 8, 9, 10, 11	EA	6
23	611(G)	INLET, DESIGN NO. 4 (STD), COMPLETE IN PLACE	D-2, 3, 7, 8, 9, 10, 11	EA	1
24	611(G)	INLET, DESIGN NO. 4 (2A), COMPLETE IN PLACE	D-2, 3, 7, 8, 9, 10, 11	EA	1
25	611(G)	INLET, DESIGN NO. 4 (C), COMPLETE IN PLACE	D-2, 3, 7, 8, 9, 10, 11	EA	1
26	611(G)	INLET, DESIGN NO. 4 (D), COMPLETE IN PLACE	D-2, 3, 7, 8, 9, 10, 11	EA	4
27	611(G)	INLET, DESIGN NO. 4 (D+A), COMPLETE IN PLACE	D-2, 3, 7, 8, 9, 10, 11	EA	2
28	611(G)	INLET, DESIGN NO. 5 (D), COMPLETE IN PLACE	D-2, 3, 7, 8, 9, 10, 11	EA	2
29	611(H)	ADDITIONAL DEPTH IN INLET, DES. 2	D-10	VF	9
30	611(H)	ADDITIONAL DEPTH IN INLET, DES. 4	D-10	VF	3
31	612(A)	MANHOLE(4' DIA.)	D-1, 2, 3, 4, 5	EA	2
32	612(A)	MANHOLE(6' DIA.)	D-1, 2, 3, 4, 5	EA	3
33	612(A)	MANHOLE(8' DIA.)	D-1, 2, 3, 4, 5	EA	3
34	612(A)	MANHOLE ADJUSTED TO GRADE (PUBLIC)	S-12, R-2, D-1, 2, 6	EA	3
35	612(E)	VALVE BOXES ADJUSTED TO GRADE	S-12, R-2, D-6	EA	15
36	612(F)	METER BOXES ADJUSTED TO GRADE	S-12, R-2, D-6	EA	5
37	613(A)	RCP,15 INCH ROUND, COMPLETE IN PLACE	D-8, 12, 13	LF	1
38	613(A)	RCP,18 INCH ROUND, COMPLETE IN PLACE	D-8, 12, 13	LF	272
39	613(A)	RCP,21 INCH ROUND, COMPLETE IN PLACE	D-8, 12, 13	LF	1
40	613(A)	RCP,24 INCH ROUND, COMPLETE IN PLACE	D-8, 12, 13	LF	318
41	613(A)	RCP,30 INCH ROUND, COMPLETE IN PLACE	D-8, 12, 13	LF	262
42	613(A)	RCP,36 INCH ROUND, COMPLETE IN PLACE	D-8, 12, 13	LF	568
43	613(A)	RCP,42 INCH ROUND, COMPLETE IN PLACE	D-8, 12, 13	LF	140
44	613(L)	42" PREFAB. CULVERT END SEC., ROUND		EA	1
45	619(A)	REMOVAL OF STRUCTURES AND OBSTRUCTIONS	D-8, 12, 13	LSUM	1
46	619(B)	REMOVAL OF CURB AND GUTTER	R-1, 2, 5, 6	LF	5030
47	619(B)	REMOVAL OF EXISTING DRIVEWAYS	R-1, 2, 5, 6	SY	4893
48	619(B)	REMOVAL OF CONCRETE PAVEMENT	R-1, 2, 5, 6	SY	15302
49	619(B)	REMOVAL OF SIDEWALK	R-1, 2, 5, 6	SY	2445
50	625(B)	REMOVE AND RECONSTRUCT FENCE		LF	91
51	SPECIAL	COORDINATION WITH LANDSCAPING CONTRACTOR		EA	1
52	SPECIAL	TYPE A CURB RAMP		EA	8
53	SPECIAL	TYPE B CURB RAMP		EA	25
54	SPECIAL	TYPE C CURB RAMP		EA	2
55	SPECIAL	OWNER ALLOWANCE		ALLOW	1
56	SPECIAL	TYPE I PCC PATCH	S-10, 11, 12, 13, 21	CY	932
57	SPECIAL	URBAN RIGHT-OF-WAY RESTORATION	G-5, 6, 7, 8, 9, 10	EA	1
58	220	SWPPP DOCUMENTATION AND MANAGEMENT		LSUM	1
59	640(A)	FIELD OFFICE		EA	1
60	641	MOBILIZATION	G-2	EA	1
61	642(B)	CONSTRUCTION STAKING LEVEL II	G-3, 4	EA	1
62	857(E)	CONSTRUCTION ZONE PAVEMENT MARKERS		EA	5270
63	880(A)	ARROW DISPLAY	46	SD	720
64	880(B)	SIGNS 0.00 TO 6.25 SF	37,38,46	SD	9180
65	880(B)	SIGNS 6.26 TO 15.99 SF	37,38,46	SD	100
66	880(B)	SIGNS 16.00 AND UP	37,38,46	SD	3330
67	880(C)	BARRICADES (TYPE III)	37,38,46	SD	10080
68	880(E)	TYPE "A" WARNING LIGHT	38	SD	17280

SCHEDULE OF PAY QUANTITIES (ROADWAY)

ITEM NO.	SPEC. NO.	ITEM	PAY ITEM NOTE	UNIT	QUANTITY
69	880(E)	TYPE "C" WARNING LIGHT	38	SD	86220
70	880(F)	DRUMS	37,38,46	SD	86220
71	880(G)	TUBE CHANNELIZERS	37,46	SD	8622
72	880(I)	FLAGGER	39	FD	30
73	882(B)	REMOTE CONTROLLED CHANGEABLE MESSAGE SIGN	46	SD	720
74	SPECIAL	CONTRACTORS QUALITY CONTROL		EA	1
75	SPECIAL	PROJECT SIGN (CITY OF TULSA)	46	EA	2
76	SPECIAL	SIGNAGE FOR BUSINESS ACCESS (BAS-1)	46	EA	22

SCHEDULE OF PAY QUANTITIES (LANDSCAPING)

ITEM NO.	SPEC. NO.	ITEM	PAY ITEM NOTE	UNIT	QUANTITY
77	02950	(PL) PLANTING (GROUNDCOVER) - MONKEY GRASS Liriope muscari 'Big Blue'	P2, P7	EA	712
78	02950	(PL) PLANTING (MATERIALS) - METAL BED EDGING	P3, P7	LF	100
79	02950	(PL) PLANTING (MATERIALS) - CYPRESS MULCH (3 CF BAG)	P4, P7	BAG	121
80	02950	(PL) PLANTING (MATERIALS) - BACK TO NATURE (3 CF BAG)	P5, P7	BAG	4921
81	02950	(PL) PLANTING (MATERIALS) - SANDY LOAM TOPSOIL	P6, P7	CY	2409
82	202(A) & 02950	UNCLASSIFIED EXCAVATION	P7, P8	CY	1732
83	230(A) & 02930	SOLID SLAB SODDING ('CODY' BUFFALO)	P1, P9	SY	11561
84	230(A) & 02930	SOLID SLAB SODDING (U3 BERMUDA)	P1, P10	SY	5585

ADD ALTERNATE #1 SITE FURNISHINGS SCHEDULE OF PAY QUANTITIES (LANDSCAPING)

ITEM NO.	SPEC. NO.	ITEM	PAY ITEM NOTE	UNIT	QUANTITY
85		72" BENCH		EA	10
86	610(A)	4" CONCRETE SIDEWALK / SLAB AT BENCH LOCATIONS		SY	40

ADD ALTERNATE #2 "NO MOW SIGNS" SCHEDULE OF PAY QUANTITIES (LANDSCAPING)

ITEM NO.	SPEC. NO.	ITEM	PAY ITEM NOTE	UNIT	QUANTITY
87		12" x 12" "NO-MOW ZONE" SIGN		EA	33

ADD ALTERNATE #3 CONDUIT FOR FUTURE PEDESTRIAN LIGHTING SCHEDULE OF PAY QUANTITIES (LANDSCAPING)

ITEM NO.	SPEC. NO.	ITEM	PAY ITEM NOTE	UNIT	QUANTITY
88	802(B)	2" PVC SCHED 80 PLASTIC CONDUIT TRENCHED		LF	10348
89	803(A)	PULL BOX SIZE III or "GREEN ROUND IRRIGATION VALVE BOX"		EA	22

BEFORE YOU DIG 811 1-800-522-OKIE CALL OKIE

LICENSED PROFESSIONAL ENGINEER JASON P. DICKMAN 27639 OKLAHOMA

07/19/2020

REVISION	BY	DATE

SUMMARY OF QUANTITIES (ROADWAY) (LANDSCAPING)

PROJECT NO. 144200

ARTERIAL STREET REHABILITATION AND WATERLINE REPLACEMENT – 36TH ST. N. – MLK BLVD TO PEORIA AVE.

CITY OF TULSA, OKLAHOMA
ENGINEERING SERVICES DEPARTMENT

PLANS AND ESTIMATES PREPARED BY: PEC PROFESSIONAL ENGINEERING CONSULTANTS, P.A. 1924 S. UTICA AVE., SUITE 1400 TULSA, OK 74104 918-684-5400 www.pec1.com

DRAWN	BFS	01/2020	APPROVED:
DESIGNED	JPD	01/2020	
SURVEY			
PROJ. MGR.		07/20	
LEAD ENGR.		7/20	
FIELD MGR.		8/20	
RECOMMENDED: DESIGN MANAGER	HAS	9-20	CITY ENGINEER

FILE: DRAWING: DATE: 10/30/20

ATLAS PAGE NO: 218, 219, 281, 282 SHEET 4 OF 165 SHEETS

DSN#: XXX PLOTTED BY: $USER# SCALE: $SCALE# $DATE# $TIME# $FILE#

GENERAL CONSTRUCTION NOTES (SEPT. 2016)(TRANSPORTATION)

1. ALL CONSTRUCTION AND MATERIALS SHALL BE IN ACCORDANCE WITH THE 2009 OKLAHOMA DEPARTMENT OF TRANSPORTATION STANDARD SPECIFICATIONS FOR HIGHWAY CONSTRUCTION AND THE CURRENT CITY OF TULSA ENGINEERING SERVICES DEPARTMENT'S STANDARD SPECIFICATIONS AND STANDARD DETAILS AND STANDARD DRAWINGS AND CITY OF TULSA SPECIAL PROVISIONS.

2. THE CONTRACTOR SHALL COMPLY WITH ALL FEDERAL, STATE AND LOCAL LAWS GOVERNING SAFETY, HEALTH AND SANITATION. THE CONTRACTOR SHALL PROVIDE ALL SAFEGUARDS, SAFETY DEVICES AND PROTECTIVE EQUIPMENT, AND TAKE ANY OTHER NEEDED ACTION ON AS HIS OWN RESPONSIBILITY OR AS THE ENGINEER MAY DETERMINE REASONABLY NECESSARY TO PROTECT PROPERTY IN CONNECTION WITH THE PERFORMANCE OF WORK COVERED BY THE CONTRACT.

3. PAY ITEMS SHALL BE AS SPECIFIED ON THE CITY OF TULSA OR ON THE ODOT STANDARD DRAWINGS EXCEPT AS MODIFIED BY THE CONTRACT.

4. THE CONTRACTOR SHALL DETERMINE THE EXACT LOCATION OF ALL EXISTING UTILITIES BEFORE COMMENCING WORK IN EACH AREA. THE CONTRACTOR IS FULLY RESPONSIBLE FOR ANY AND ALL DAMAGES WHICH MIGHT RESULT FROM HIS FAILURE TO LOCATE AND PRESERVE ANY AND ALL UTILITIES.

5. THE LOCATIONS OF THE UTILITIES ARE SHOWN ACCORDING TO ALL AVAILABLE INFORMATION. THE CONTRACTOR SHALL NOTIFY EACH UTILITY OWNER PRIOR TO COMMENCEMENT OF WORK TO VERIFY BOTH HORIZONTAL AND VERTICAL LOCATIONS. THE FOLLOWING IS A LIST OF UTILITY OWNERS; AT&T, PUBLIC SERVICE COMPANY OF OKLAHOMA (AEP), OKLAHOMA NATURAL GAS (ONG), COX COMMUNICATIONS, MCI/VERIZON, EASYTEL COMMUNICATIONS, WELLSCO VALLOR TELECOM, CITY OF TULSA–WATER AND SEWER, CITY OF TULSA–TRAFFIC OPERATIONS. SEE TITLE SHEET FOR CONTACT INFORMATION.

6. THE CONTRACTOR SHALL GIVE THE NOTIFICATION CENTER OF OKLAHOMA ONE–CALL SYSTEM, INC. NOTICE OF ANY EXCAVATION NO SOONER THAN TEN DAYS NOR LATER THAN 48 HOURS , EXCLUDING SATURDAYS, SUNDAYS AND LEGAL HOLIDAYS, PRIOR TO THE COMMENCEMENT OF WORK. PHONE 1–800–522–6543.

7. THE CONTRACTOR SHALL TAKE REASONABLE PRECAUTIONS TO PREVENT EXCESS MOISTURE FROM INCLEMENT WEATHER OR OTHER SOURCES FROM ENTERING ANY STREET EXCAVATION. IF EXCESS MOISTURE DOES ENTER THE EXCAVATION THROUGH THE NEGLIGENCE OF THE CONTRACTOR AND THE ADJOINING PAVEMENT IS ADVERSELY EFFECTED BY THE EXCESS MOISTURE, THE CONTRACTOR SHALL REPLACE THE ADJOINING PAVEMENT AND SUBBASE AT HIS SOLE EXPENSE.

8. THE CONTRACTOR SHALL PRESERVE THE INTEGRITY OF THE SANITARY SEWER STRUCTURES AND ALL OTHER UTILITY STRUCTURES WITHIN THE PROJECT EXTENTS.

9. THE CONTRACTOR SHALL WORK IN COOPERATION WITH THE CITY OF TULSA TO ESTABLISH, INSTALL, MAINTAIN, AND OPERATE COMPLETE, ADEQUATE, AND SAFE TRAFFIC CONTROLS DURING THE ENTIRE CONSTRUCTION PERIOD. ALL FLAGMEN, BARRICADES, AND TRAFFIC CONTROL DEVICES SHALL BE APPROVED BY THE FIELD ENGINEERING REPRESENTATIVE.

10. CONSTRUCTION SIGNAGE WILL BE INSTALLED IN A MANNER APPROVED BY THE ENGINEER, IN ACCORDANCE WITH CHAPTER VI OF THE MANUAL ON UNIFORM TRAFFIC CONTROL DEVICES, CURRENT ADDITION, AND APPLICABLE ODOT STANDARD DRAWINGS. THE CONTRACTOR SHALL PROVIDE A PROPOSED TRAFFIC CONTROL PLAN FOR APPROVAL BY THE ENGINEER PRIOR TO BEGINNING WORK.

11. THE CONTRACTOR SHALL NOTIFY THE CITY OF TULSA FIELD ENGINEERING, 918–596–9404, A MINIMUM OF 48 HOURS PRIOR TO COMMENCING WORK OR PRIOR TO REMOVING TRAFFIC SIGNS.

12. THE CONTRACTOR SHALL BE RESPONSIBLE FOR THE REPLACEMENT OF ALL EXISTING TRAFFIC SIGNS AND MARKINGS REMOVED OR DAMAGED AS LISTED IN THE SIGNAGE SCHEDULE FOR THE PROJECT. ALL SIGNS AND POLES PROVIDED SHALL BE NEW AND UNDAMAGED AND SHALL MEET THE REQUIREMENTS OF COT SPECIFICATION 608 TRAFFIC SIGNS. ALL TRAFFIC MATERIALS REMOVED SHALL BE HANDLED PER COT SPECIFICATION 625 REMOVAL OF TRAFFIC ITEMS.

13. THE CONTRACTOR WILL BE RESPONSIBLE FOR PREPARATION AND DISTRIBUTION OF A WRITTEN NOTICE TO RESIDENTS 48 HOURS PRIOR TO BEGINNING PAVEMENT REMOVAL AND MILLING AND OVERLAY OPERATIONS.

14. LOCAL AND THROUGH TRAFFIC SHALL BE MAINTAINED THROUGH THE PROJECT AT ALL TIMES.

15. ALL PUBLIC AND PRIVATE STREETS AND DRIVES SHALL BE ACCESSIBLE AT ALL TIMES.

16. ALL BROKEN CONCRETE, WASTE MATERIAL, AND OTHER DEBRIS SHALL BECOME THE PROPERTY OF THE CONTRACTOR AND SHALL BE REMOVED FROM THE LIMITS OF THE PROJECT AND DISPOSED OF IN A MANNER APPROVED BY THE ENGINEER. NO ADDITIONAL PAYMENT WILL BE MADE FOR THE DISPOSAL OF THIS MATERIAL.

17. ALL EXCAVATED MATERIAL NOT REQUIRED IN THE PROJECT SHALL BECOME THE PROPERTY OF THE CONTRACTOR AND SHALL BE DISPOSED OF BY THE CONTRACTOR IN A MANNER ACCEPTABLE TO THE ENGINEER WITHOUT COST TO THE CITY. THE CONTRACTOR WILL BE REQUIRED TO OBTAIN AN EARTH CHANGE PERMIT IF ANY MATERIAL IS STORED ON THE PROJECT SITE AND/OR DISPOSED OF WITHIN THE CITY LIMITS.

18. ALL TREES, BRUSH AND OTHER DEBRIS THAT MIGHT INTERFERE WITH THE FLOW OF WATER IS TO BE CLEANED OUT TO THE RIGHT–OF–WAY LINE IN A MANNER APPROVED BY THE ENGINEER. ALL COST TO BE INCLUDED IN THE PRICE BID FOR OTHER ITEMS OF WORK. TREES OUTSIDE THE FILL SLOPES AND THE TOP OF CUT SLOPES SHALL NOT BE DISTURBED EXCEPT WITH THE WRITTEN APPROVAL OF THE ENGINEER.

19. WHERE MATERIALS ARE TRANSPORTED IN THE PROSECUTION OF WORK, VEHICLES SHALL NOT BE LOADED BEYOND THE CAPACITY RECOMMENDED BY THE VEHICLE MANUFACTURER OR AS PRESCRIBED BY ANY FEDERAL, STATE OR LOCAL LAW OR REGULATION.

20. ANY DAMAGE TO THE ROADWAY PAVEMENT, CURB, DRIVEWAYS OR SIDEWALK CAUSED BY THE CONTRACTOR'S OPERATION SHALL BE REPAIRED TO THE ENGINEER'S SATISFACTION AND SHALL BE ACCOMPLISHED AT THE CONTRACTOR'S SOLE EXPENSE. ALL DISTURBED ITEMS SHALL BE REPAIRED TO MATCH EXISTING MATERIALS AND PATTERNING.

21. IF THE CONTRACTOR ENCOUNTERS VOIDS WHEN PATCHING STREETS, THE CONTRACTOR SHALL CALL FIELD ENGINEERING AT 918–596–7814 FOR AN INSPECTION BEFORE PROCEEDING WITH WORK.

22. THE PROJECT SHALL BE CONSTRUCTED WITH CONTINUOUS FLOW OF MATERIAL SUPPLIED TO THE PROJECT SUCH THAT THE LAYDOWN MACHINE WILL REMAIN IN MOTION. ANY DELAY IN FORWARD PROGRESSION OF THE LAYDOWN MACHINE MAY REQUIRE A TRANSVERSE JOINT AS DIRECTED BY THE ENGINEER.

23. NO FLY ASH IS ALLOWED TO BE USED ON THIS PROJECT.

24. PHYSICAL TESTING FOR QUALITY ASSURANCE SHALL BE FURNISHED BY THE CITY.

25. CONTRACTOR IS RESPONSIBLE FOR ALL NECESSARY QUALITY CONTROL TESTING TO ENSURE THAT PROJECT REQUIREMENTS ARE MET.

26. MASONRY STRUCTURES SHALL NOT BE CONSTRUCTED WITHIN THE STREET RIGHT–OF–WAY.

27. ALL CONCRETE CURB AND GUTTERS SHALL BE MONOLITHIC POURS. DOWELED–ON CURBS WILL NOT BE ALLOWED.

28. NO LIFTING HOLES WILL BE ALLOWED ON ANY REINFORCED CONCRETE PIPES OR REINFORCED CONCRETE BOXES.

29. CURB RAMP CONSTRUCTION SHALL COMPLY WITH THE CURRENT AMERICANS WITH DISABILITIES ACT STANDARDS.

30. REFLECTORIZED SHEETING ON SIGNS AND BARRICADES SHALL BE OF A CUBIC PRISMATIC TYPE AND SHALL MEET THE SPECIFICATIONS ESTABLISHED FOR ASTM D 4956–01 TYPE IX RETROREFLECTIVE SHEETING. REFLECTORIZED SHEETING ON DRUMS AND TUBE CHANNELIZERS SHALL BE OF A HIGH–INTENSITY TYPE AND SHALL MEET THE SPECIFICATIONS ESTABLISHED FOR ASTM D 4956–01 TYPE III RETROREFLECTIVE SHEETING.

31. ALL SANITARY AND STORM SEWER MANHOLE CASTINGS AND LIDS THAT ARE LOCATED IN THE STREET AND ARE DISTURBED BY THE CONTRACTOR SHALL BE REPLACED WITH NEW LIDS AND CASTINGS AND THE OLD ONES SHALL BE SALVAGED AND DELIVERED TO THE METAL RECYCLE BINS IN THE STOCKROOM AREA AT SEWER OPERATIONS AND MAINTENANCE, 9319 E. 42ND STREET NORTH, BETWEEN THE HOURS OF 7:30 AM AND 3:00 PM MONDAY THROUGH FRIDAY.

32. THE SIGN PLACEMENT STATIONING AND LOCATIONS SHOWN ON THE PLAN SHEETS AND SUMMARY SHEETS ARE APPROXIMATE. EXACT STATIONING AND LOCATIONS SHALL BE VERIFIED BY THE CONTRACTOR SO THAT THE SIGN IS INSTALLED IN ACCORDANCE WITH CITY OF TULSA STANDARDS, CURRENT AMERICANS WITH DISABILITIES ACT STANDARDS, AND THE MANUAL ON UNIFORM TRAFFIC CONTROL DEVICES IN ORDER TO PROVIDE OPTIMUM VISIBILITY TO THE ONCOMING/APPROACHING MOTORIST. IF A PROPOSED LOCATION CONFLICTS WITH OTHER SIGNS, UTILITIES, OR OTHER ROADWAY FEATURES, THE ENGINEER SHALL BE NOTIFIED.

33. THE CONTRACTOR SHALL BE RESPONSIBLE FOR THE REPLACEMENT OF ALL EXISTING NEIGHBORHOOD, MTTA ETC. TRAFFIC SIGNS AND MARKINGS REMOVED OR DAMAGED AS PART OF THIS PROJECT, AT THE CONTRACTORS EXPENSE.

34. POST LENGTHS SHOWN ON SIGN SUMMARY ARE APPROXIMATE. EXACT LENGTHS SHALL BE DETERMINED BY A FIELD SURVEY CONDUCTED BY THE CONTRACTOR.

35. ALL ASPHALT STREETS THAT ARE TO BE RECONSTRUCTED SHALL BE LEFT WITH A DRIVABLE SURFACE AT ALL TIMES. THE CONTRACTOR WILL NOT BE ALLOWED TO MILL OFF ALL THE ASPHALT BEFORE EXCAVATION BEGINS.

36. THE CONTRACTOR SHALL REPLACE ANY SECTION CORNERS OR OTHER PERMANENT RIGHT OF WAY MARKERS REMOVED OR DISTURBED AS A RESULT OF THE CONSTRUCTION OF THIS PROJECT. REPLACEMENT OF SECTION CORNERS OR ANY OTHER MONUMENTS SHALL BE PERFORMED BY A LICENSED LAND SURVEYOR AUTHORIZED TO PERFORM WORK IN THE STATE OF OKLAHOMA.

37. THE CONTRACTOR SHALL BE RESPONSIBLE FOR THE CONTROL AND MAINTENANCE OF THE STORMWATER DRAINAGE. STORMWATER PONDING ON THE CONSTRUCTION SITE THAT IS THE RESULT OF CONSTRUCTION WILL NOT BE ALLOWED.

38. STRAW OR HAY BALES AS STORMWATER BEST MANAGEMENT PRACTICES ARE NO LONGER ALLOWED ON CONSTRUCTION PROJECTS.

39. THE CONTRACTOR MUST CALL 1–800–458–4251 IMMEDIATELY IF A NATURAL GAS PIPELINE IS CUT, DAMAGED, OR OTHERWISE DISTURBED.

40. PRIOR TO FINAL ACCEPTANCE, ALL EXPOSED CURB SURFACES SHALL BE CLEANED OF ALL DICOLORATION SUCH AS ASPHALT STAIN, TIRE MARKS, OR OTHER DISFIGUREMENT.

41. ALL FEATURES OF THIS PROJECT INCLUDING, BUT NOT LIMITED TO, SIDEWALKS, CURB RAMPS, AND CROSSWALKS SHALL COMPLY WITH THE AMERICANS WITH DISABILITIES ACT, ACCESSIBILITY GUIDELINES, AND THE PROPOSED ACCESSIBILITY GUIDELINES FOR PEDESTRIAN FACILITIES IN THE PUBLIC RIGHT–OF–WAY, PUBLISHED ON JULY 26, 2011 BY THE U.S. ACCESS BOARD. WHERE SPATIAL LIMITATIONS OR EXISTING FEATURES WITHIN THE LIMITS OF THE PROJECT PREVENT FULL COMPLIANCE WITH THIS ACT, THE CONTRACTOR SHALL IMMEDIATELY NOTIFY THE ENGINEER UPON DISCOVERY OF SUCH FEATURES. THE CONTACTOR SHALL NOT PROCEED WITH ANY ASPECT OF THE WORK, WHICH IS NOT IN FULL COMPLIANCE WITH THE ADA WITHOUR PRIOR WRITTEN APPROVAL FROM THE ENGINEER. ANY WORK WHICH IS NOT PERFORMED WITHIN THE GUIDELINES OF THE ADA, FOR WHICH THE CONTRACTOR DOES NOT HAVE WRITTEN APPROVAL, SHALL BE CORRECTED AT THE CONTRACTOR'S EXPENSE.

42. ALL TRENCH WIDTHS & BEDDING MATERIAL SHALL BE AS SHOWN ON COT STANDARD PIPE BEDDING DETAIL, STANDARD NO. 751. SPECIFIED TRENCH WIDTHS SHALL BE MAINTAINED FULL DEPTH FROM THE FLOWLINE TO THE GRADING TEMPLATE. THE CONTRACTOR SHALL KEEP THE OPEN TRENCH DRAINED.

43. THE CONTRACTOR SHALL NOTIFY THE METROPOLITAN TULSA TRANSIT AUTHORITY (MTTA), ERIC SMITH 918–830–0024, A MINIMUM OF 48 HOURS PRIOR TO COMMENCING WORK, LANE CLOSURES OR PRIOR TO DETOURING TRAFFIC.

44. CONTRACTOR SHALL NOT STORE EQUIPMENT OR MATERIALS IN THE FLOODPLAIN





07/19/2020

REVISION	BY	DATE

GENERAL CONSTRUCTION NOTES

PROJECT NO. 144200

ARTERIAL STREET REHABILITATION AND WATERLINE REPLACEMENT – 36TH ST. N. – MLK BLVD TO PEORIA AVE.

CITY OF TULSA, OKLAHOMA
ENGINEERING SERVICES DEPARTMENT

PLANS AND ESTIMATES PREPARED BY: PEC PROFESSIONAL ENGINEERING CONSULTANTS, P.A. 1924 S. UTICA AVE., SUITE 1400 TULSA, OK 74104 918-664-5400 www.pec1.com

DRAWN	BFS	01/2020	APPROVED:
DESIGNED	JPD	01/2020	
SURVEY			
PROJ. MGR.			
LEAD ENGR.			
FIELD MGR.			
RECOMMENDED: DESIGN MANAGER			CITY ENGINEER

FILE: DRAWING: DATE:

ATLAS PAGE NO: 218, 219, 281, 282 SHEET 5 OF 165 SHEETS

DSNG: XXX PLOTTED BY: $USER$ SCALE: $SCALE$ $DATE$ $TIME$
$FILE$

SCHEDULE OF PAY QUANTITIES (TRAFFIC)

ITEM NO.	SPEC. NO.	DESCRIPTION	PAY ITEM NOTE	UNIT	QUANTITY
90	COT 601	PULL BOX SIZE II		EA	3
91	COT 601	PULL BOX SIZE III		EA	1
92	COT 602	2" PVC SCH 40 PLASTIC CONDUIT (TRENCHED)		LF	461
93	COT 602	3" PVC SCH 40 PLASTIC CONDUIT (TRENCHED)		LF	63
94	COT 602	2-3" HDPE SCH 40 CONDUIT (BORE)		LF	266
95	COT 603	36" SIGNAL FOOTING S-18/24	81	EA	2
96	COT 603	36" SIGNAL FOOTING S-30/36	81	EA	3
97	COT 603	24" PEDESTAL FOOTING F-1	81	EA	13
98.	COT 606	PRE-EMPTION CABLE		LF	640
99	COT 606	INFRARED PRE-EMPTION DETECTOR - SINGLE		EA	4
100	COT 606	PRE-EMPTION PHASE SELECTOR		EA	1
101	COT 607	SERVICE TO SIGNAL STANDARD	82	EA	1
102	COT 608	GROUND MOUNT SIGN	37	SF	18
103	COT 608	OVERHEAD SIGN	37	SF	86
104	COT 608	1-1/2" SIGN POST		LF	14
105	COT 608	1-3/4" SIGN POST		LF	700
106	COT 608	2" SIGN POST		LF	90
107	COT 610	TRAFFIC SIGNAL CONTROLER CABINET ASSEMBLY	83,84,87	EA	1
108	COT 611	2C #14 TRAFFIC SIGNAL ELECTRICAL CABLE		LF	460
109	COT 611	4C #14 TRAFFIC SIGNAL ELECTRICAL CABLE		LF	505
110	COT 611	7C #14 TRAFFIC SIGNAL ELECTRICAL CABLE		LF	875
111	COT 611	20C #14 TRAFFIC SIGNAL ELECTRICAL CABLE		LF	485
112	COT 611	GREEN #6 THHN ELECTRICAL CONDUCTOR		LF	1290
113	COT 611	GREEN #12 THHN ELECTRICAL CONDUCTOR		LF	975
114	COT 612	CABINET BASE, APRON AND GUARD		EA	1
115	COT 613	AUDIBLE PEDESTRIAN PUSHBUTTON AND SIGN	88	EA	16
116	COT 614	LED 3 SECTION TRAFFIC SIGNAL HEAD (#36)	85	EA	8
117	COT 614	LED ICC PEDESTRAIN HEAD (#33)		EA	8
118	COT 617	24' MODULAR TRAFFIC SIGNAL MAST ARM & POLE W/O LUMINAIRE EXTENSION		EA	2
119	COT 617	36' MODULAR TRAFFIC SIGNAL MAST ARM & POLE W/O LUMINAIRE EXTENSION		EA	3
120	COT 617	10' PEDESTAL POLE		EA	13
121	COT 619	TEMP SIGNAL SPAN		EA	1
122	COT 619	TEMP SIGNAL POLE		EA	1
123	COT 619	TEMP SIGNAL CABINET		EA	1
124	COT 619	TEMP SIGNAL SERVICE		EA	1
125	COT 622	WIRELESS TRAFFIC SIGNAL COMMUNICATIONS SYSTEM		EA	1
126	COT 623	BATTERY BACKUP SYSTEM		EA	1
127	COT 625	REMOVAL OF TRAFFIC ITEMS	66, 86	EA	1
128	SPECIAL	RECTANGULAR RAPID FLASH BEACON (RRFB) INSTALLATION		EA	4
129	855(A)	TRAFFIC STRIPE (PLASTIC) (4" WIDE)	36	LF	9335
130	855(A)	TRAFFIC STRIPE (PLASTIC) (6" WIDE)	36	LF	10167
131	855(A)	TRAFFIC STRIPE (PLASTIC) (8" WIDE)	36	LF	52
132	855(A)	TRAFFIC STRIPE (PLASTIC) (24" WIDE)	36	LF	1702
133	855(B)	TRAFFIC STRIPE (PLASTIC) (ARROWS)	36	EA	25
134	855(B)	TRAFFIC STRIPE (PLASTIC)("BIKE LANE")(ARROW)	36	EA	8
135	855(B)	TRAFFIC STRIPE (PLASTIC)(BIKE SYMBOL)	36	EA	48
136	857(F)	PAVEMENT MARKING REMOVAL		LF	10700
136A	SPECIAL	TEMPORARY TRAFFIC SIGNAL COORDINATION		EA	1

PAY ITEM NOTES (TRAFFIC)

1. - 35. NOT USED.

36. ALL PLASTIC PAVEMENT MARKINGS SHALL BE:

EXTRUDED-APPLIED THERMOPLASTIC (USE ON ASPHALT PAVEMENT AND CONCRETE PAVEMENT). THERMOPLASTIC PAVEMENT MARKINGS SHALL ONLY BE APPLIED WHEN THE SURFACE TEMPERATURE EXCEED 55°F FOR ALL OF THE SIX HOURS PRIOR TO INSTALLATION AND MAXIMUM WIND GUSTS ARE BELOW 15 MPH AT THE TIME OF APPLICATION. PRICE BID TO INCLUDE FLEX TABS OR LIKE KIND FOR POST CONSTRUCTION LANE MARKING/SEPARATION. MECHANICALLY APPLIED PREFORMED PLASTIC TAPE ("COLD TAPE") WILL NOT BE ACCEPTED.

37. REFLECTORIZED SHEETING ON SIGNS AND BARRICADES SHALL BE OF A CUBIC PRISMATIC TYPE AND SHALL MEET THE SPECIFICATIONS ESTABLISHED FOR ASTM D 4956-01 TYPE IX RETROREFLECTIVE SHEETING. REFLECTORIZED SHEETING ON DRUMS AND TUBE CHANNELIZERS SHALL BE OF A HIGH-INTENSITY TYPE AND SHALL MEET THE SPECIFICATIONS ESTABLISHED FOR ASTM D 4956-01 TYPE III RETROREFLECTIVE SHEETING.

38. IF WARNING LIGHTS ARE TO BE USED ON TRAFFIC CONTROL DEVICES, TYPE "A" LIGHTS SHALL ONLY BE USED ON DEVICES WARNING OF UNEXPECTED HAZARDS, AND SHALL NOT BE USED FOR DELINEATION OF THE TRAVELED WAY. ONLY TYPE "C" WARNING LIGHTS SHALL BE USED FOR DELINEATION OF THE TRAVELED WAY, AND TYPE "C" LIGHTS SHALL NOT BE USED FOR ANY OTHER PURPOSE.

39. THE PAY ITEM FOR FLAGGER SHALL BE PAID FOR ON A FLAG DAY (F.D.) BASIS. ONE F.D. IS ONE COMPLETE WORKDAY AS PERFORMED BY THE CONTRACTOR SET FORTH IN THE CONTRACT DOCUMENTS AND SPECIFICATIONS.

40. - 45. NOT USED.

46. PRICE BID FOR THIS ITEM SHALL BE PAYMENT IN FULL FOR THE INSTALLATION, MAINTENANCE AND SUBSEQUENT REMOVAL OF ALL NECESSARY CONSTRUCTION TRAFFIC CONTROL REQUIRED FOR COMPLETION OF THE PROJECT.

47. - 65. NOT USED.

66. ALL TRAFFIC MATERIALS REMOVED SHALL BE HANDLED PER COT SPECIFICATION 625 REMOVAL OF TRAFFIC ITEMS.

67. NOT USED.

68. NOT USED.

81. POLE FOUNDATIONS SHALL BE CONSTRUCTED ACCORDING TO THE REQUIREMENTS OF ODOT STANDARD SPECIFICATIONS FOR DRILLED SHAFT FOUNDATIONS.

82. THE INSTALLED SERVICE SHALL BE FULLY OPERATIONAL AND ANY COSTS CHARGED BY THE UTILITY COMPANY FOR THE SERVICE INSTALLATION SHALL BE PAID BY THE CONTRACTOR AND IS INCLUDED IN THIS PAY ITEM.

83. THE TRAFFIC SIGNAL CONTROLLER PROVIDED SHALL BE AN ECONOLITE ATC COBALT IN A 332S SIGNAL CABINET. CONFLICT MONITOR SHALL BE AN EDI 2018 ECLIP. BATTERY BACKUP SHALL BE ECONOLITE ZINC BLUE 2. VIDEO DETECTION SHALL BE ECONOLITE AUTOSCOPE VISION.

84. THE CONTRACTOR SHALL DELIVER THE FULLY WIRED SIGNAL CABINET TO THE COT TRAFFIC OPERATIONS DIVISION FOR APPROVAL.

85. HINGES SHALL BE LOCATED TO THE LEFT SIDE FOR 3-SECTION SIGNAL HEADS AND TOWARD THE OUTSIDE EDGES FOR A 5-SECTION SIGNAL HEAD. THE CONTRACTOR SHALL PICK UP THE LUMINAIRE(S) AND RELATED EQUIPMENT (200W HPS LUMINAIRE, 200W HPS LAMP, 120V PHOTO CELL, INLINE FUSE HOLDER, AND 5AMP KTK FUSE) AT THE AEP/PSO WAREHOUSE ON 15TH STREET NEAR FULTON AVENUE IN TULSA.

86. THIS PAY ITEM INCLUDES THE REMOVAL AND DELIVERY OF THE FOLLOWING EQUIPMENT TO THE CITY OF TULSA TRAFFIC OPERATIONS SHOP AT 440 W. 23RD, WHICH IS TO REMAIN THE PROPERTY OF THE CITY OF TULSA:

MULTI-SIDED GALVANIZED TRAFFIC SIGNAL POLES, SIGNAL HEADS, PEDESTRIAN HEADS AND PUSH BUTTONS, BACK PLATES, CONTROLLER CABINET ASSEMBLY, CABINET GUARD, UNDAMAGED PULL BOX LIDS, MAST ARM SIGNS, ASTRO-BRACKETS, SPAN WIRE EQUIPMENT AND ANY OTHER TRAFFIC SIGNAL EQUIPMENT REMOVED EXCEPT FOR THE PULL BOXES, CONDUIT AND WIRE WHICH SHALL BECOME THE PROPERTY OF THE CONTRACTOR. THE PRICE BID SHALL INCLUDE THE REMOVAL OF ALL FOOTINGS BELOW GROUND LEVEL OR AS DIRECTED BY THE ENGINEER. FOOTINGS, GREEN ARM POLES, AND ALL OTHER SIGNAL POLES OTHER THAN THE MULTI-SIDED POLES ARE TO BECOME THE PROPERTY OF THE CONTRACTOR.

87. THE CABINET PROVIDED SHALL BE A STRETCH CABINET MEETING THE CABINET AND DOOR HEIGHT SPECIFICATIONS OF A MCCAIN 332S CABINET. ALL OTHER DIMENSIONS SHALL MEET CURRENT COT STANDARDS AND SPECIFICATIONS.

88. THE PEDESTRIAN SIGNAL INDICATIONS FURNISHED ON THIS PROJECT SHALL INCLUDE AUDIBLE INDICATIONS TO SERVE VISUALLY IMPAIRED PEDESTRIANS. THE AUDIBLE INDICATIONS SHALL BE POLARA IN2, OR APPROVED EQUAL, WITH INTERNAL SPEAKERS OR APPROVED EQUAL. IT SHALL PROVIDE AN ELECTRONIC BIRD SOUND WITH "CUCKOO" FOR NORTH/SOUTH AND "PEEP-PEEP" FOR ALL CROSSINGS EXCEPT AS NOTED BELOW. THE OUTPUT VOLUME SHALL ADJUST AUTOMATICALLY TO CHANGING AMBIENT NOISE LEVELS.

A. THE NORTH/SOUTH PUSH BUTTONS (2) AT 36TH AND MLK JR SHALL BE FACTORY PROGRAMMED WITH THE FOLLOWING VERBAL MESSAGES:
DURING FLASHING DON'T WALK AND STEADY DON'T WALK - "WAIT TO CROSS 36TH AT MLK JR"
DURING WALK - "36TH - WALK SIGN IS ON TO CROSS 36TH"
B. THE EAST PUSH BUTTONS (2) AT 36TH AND MLK JR SHALL BE FACTORY PROGRAMMED WITH THE FOLLOWING VERBAL MESSAGES:
DURING FLASHING DON'T WALK AND STEADY DON'T WALK - "WAIT TO CROSS MLK JR AT 36TH"
DURING WALK - "MLK JR - WALK SIGN IS ON TO CROSS MLK JR"
C. THE NORTH/SOUTH PUSH BUTTONS (2) AT 36TH AND HARTFORD SHALL BE FACTORY PROGRAMMED WITH THE FOLLOWING VERBAL MESSAGES:
DURING FLASHING DON'T WALK AND STEADY DON'T WALK - "WAIT TO CROSS 36TH AT HARTFORD"
DURING WALK - "36TH - WALK SIGN IS ON TO CROSS 36TH"
D. THE EAST PUSH BUTTONS (2) AT 36TH AND HARTFORD SHALL BE FACTORY PROGRAMMED WITH THE FOLLOWING VERBAL MESSAGES:
DURING FLASHING DON'T WALK AND STEADY DON'T WALK - "WAIT TO CROSS HARTFORD AT 36TH"
DURING WALK - "HARTFORD - WALK SIGN IS ON TO CROSS HARTFORD"
E. THE EAST/WEST PUSH BUTTONS (2) AT 36TH AND PEORIA SHALL BE FACTORY PROGRAMMED WITH THE FOLLOWING VERBAL MESSAGES:
DURING FLASHING DON'T WALK AND STEADY DON'T WALK - "WAIT TO CROSS PEORIA AT 36TH"
DURING WALK - "PEORIA - WALK SIGN IS ON TO CROSS PEORIA"
F. THE NORTH PUSH BUTTONS (2) AT 36TH AND PEORIA SHALL BE FACTORY PROGRAMMED WITH THE FOLLOWING VERBAL MESSAGES:
DURING FLASHING DON'T WALK AND STEADY DON'T WALK - "WAIT TO CROSS 36TH AT PEORIA"
DURING WALK - "36TH - WALK SIGN IS ON TO CROSS 36TH"

LICENSED PROFESSIONAL ENGINEER
JASON P. DICKMAN
27639
OKLAHOMA
08/14/2020

REVISION	BY	DATE

SUMMARY OF PAY QUANTITIES AND NOTES (TRAFFIC)

PROJECT NO. 144200

ARTERIAL STREET REHABILITATION AND WATERLINE REPLACEMENT – 36TH ST. N. – MLK BLVD TO PEORIA AVE.

CITY OF TULSA, OKLAHOMA
ENGINEERING SERVICES DEPARTMENT

PLANS AND ESTIMATES PREPARED BY: PEC PROFESSIONAL ENGINEERING CONSULTANTS, P.A. 1924 S. UTICA AVE., SUITE 1400 TULSA, OK 74104 918-664-5400 www.pec1.com

DRAWN	BFS	01/2020	APPROVED:	
DESIGNED	JPD	01/2020		
SURVEY				
PROJ. MGR.	ARL	09/20		
LEAD ENGR.	JPD	08/20		
FIELD MGR.		8/20		
RECOMMENDED: DESIGN MANAGER	HAS	9.20	CITY ENGINEER	

FILE: DRAWING: DATE: 10/30/20

ATLAS PAGE NO: 218, 219, 281, 282 SHEET 6 OF 165 SHEETS

DSNR: XXX PLOTTED BY: $USER# SCALE: $SCALE# $DATE# $TIME#
$FILE$

WATER CONSTRUCTION NOTES (REVISED 09/24/2018)

1. THE CITY OF TULSA FIELD ENGINEERING DEPARTMENT SHALL INSPECT ALL TRENCHING, BEDDING, PIPE INSTALLATION, BACKFILL AND COMPACTION.

2. ALL CONSTRUCTION AND MATERIALS SHALL BE IN ACCORDANCE WITH CURRENT STANDARD SPECIFICATIONS AND STANDARD DETAILS, CITY OF TULSA ENGINEERING SERVICES DEPARTMENT.

3. EXISTING SERVICE CONNECTIONS ARE TO BE KEPT IN SERVICE UNTIL CONNECTIONS TO NEW MAIN ARE MADE. ALL SERVICE LINE RECONNECTIONS SHALL BE MADE BY THE CONTRACTOR. SERVICE RECONNECTIONS SHALL BE INSTALLED AS PER CITY OF TULSA STANDARD SPECIFICATIONS AND STANDARD DETAILS.

4. MINIMUM COVER OVER WATER LINES SHALL BE AS NOTED ON PLANS.

5. CONTRACTOR SHALL REPLACE EXISTING GRASS WITH SEED/SOD OF SAME TYPE AND VARIETY OR AS NOTED ON PLANS.

6. CONTRACTOR SHALL BORE EXISTING TREES UNDER DRIP LINE, UNLESS DIRECTED OTHERWISE BY ENGINEER.

7. CONTRACTOR SHALL BORE EXISTING DRIVEWAYS, UNLESS DIRECTED OTHERWISE BY ENGINEER.

8. WATER OPERATIONS SHALL OPERATE ALL VALVES ON TRANSMISSION MAINS (16" AND LARGER). CONTRACTOR SHALL OPERATE ALL VALVES ON DISTRIBUTION MAINS (SMALLER THAN 16") WITH THE COORDINATION OF FIELD ENGINEERING AND WATER OPERATIONS AND IN THE PRESENCE OF A FIELD ENGINEERING INSPECTOR.

   a. ATTEMPTS WILL BE MADE WITH ASSISTANCE FROM THE CONTRACTOR TO NOTIFY ALL AFFECTED CUSTOMERS 48-HOURS IN ADVANCE, PARTICULARLY IF COMMERCIAL OR INDUSTRIAL CUSTOMERS ARE INVOLVED. PRIOR TO SHUTDOWN, FIELD ENGINEERING WILL NOTIFY WATER OPERATIONS, AT 918-596-9488, GIVING AN ESTIMATED DOWNTIME. WATER OPERATIONS WILL NOTIFY THE FIRE DEPARTMENT OF ALL FIRE HYDRANTS OUT OF SERVICE AND WHEN THEY ARE BACK IN SERVICE, BY STREET ADDRESS OR INTERSECTION.

   b. WHERE COMMERCIAL, INDUSTRIAL, OR CRITICAL CUSTOMERS ARE AFFECTED, AND FOR ALL LINES 16-INCH AND LARGER IN SIZE, FIELD ENGINEERING WILL REQUEST WATER OPERATIONS TO SHUT DOWN THE MAIN. THERE WILL BE A MINIMUM OF 48-HOUR NOTICE TO WATER OPERATIONS.

9. CONTRACTOR SHALL PROVIDE AT LEAST 48 HOUR NOTICE TO ALL RESIDENTS OR BUSINESSES AFFECTED BEFORE TURNING OFF ANY WATER. CONTRACTOR SHALL BE RESPONSIBLE FOR PLACING DOOR HANGERS ON AFFECTED HOMES AND BUSINESSES.

10. CONTRACTOR SHALL GIVE THE NOTIFICATION CENTER OF THE OKLAHOMA ONE-CALL SYSTEM, INC, NOTICE OF ANY EXCAVATION NO SOONER THAN 48 HOURS OR LATER THAN 10 DAYS, EXCLUDING SATURDAYS, SUNDAYS, LEGAL HOLIDAYS PRIOR TO COMMENCEMENT OF WORK, PHONE 1-800-522-6543.

11. LOCAL AND THROUGH TRAFFIC SHALL BE MAINTAINED THROUGH PROJECT AT ALL TIMES. OPEN CUT STREET CROSSINGS REQUIRE AN APPROVED TRAFFIC CONTROL PLAN WITH TRAFFIC CONTROL DEVICES IN ACCORDANCE WITH CURRENT MUTCD REQUIREMENTS

12. ANY DAMAGE CAUSED BY CONTRACTOR TO ADJACENT TRAFFIC SIGNAL INFRASTRUCTURE SHALL BE REPAIRED AT CONTRACTOR'S EXPENSE TO THE SATISFACTION OF THE TRAFFIC ENGINEER.

13. PRIOR TO PAVEMENT SAWING AND EXCAVATION NEAR SIGNALIZED INTERSECTION, CONTRACTOR SHALL CONTACT ENGINEERING SERVICES, TRAFFIC OPERATIONS, 918-596-9766, FOR SITE SPECIFIC, UNDERGROUND TRAFFIC UTILITY LOCATES.

14. CONSTRUCTION FOR ALL ENGINEERING SERVICES FACILITIES SHALL BE IN COMPLIANCE WITH THE LATEST EDITION OF TITLE 252, DEPARTMENT OF ENVIRONMENTAL QUALITY, CHAPTER 626, PUBLIC WATER SUPPLY CONSTRUCTION STANDARDS, OKLAHOMA DEPARTMENT OF ENVIRONMENTAL QUALITY (ODEQ).

15. ALL EXCAVATED MATERIAL NOT REQUIRED IN OTHER AREAS OF THE PROJECT SHALL BECOME THE PROPERTY OF THE CONTRACTOR AND SHALL BE DISPOSED OF BY THE CONTRACTOR IN A MANNER ACCEPTABLE TO THE ENGINEER WITHOUT COST TO THE CITY. THE CONTRACTOR SHALL BE REQUIRED TO OBTAIN AN EARTH CHANGE PERMIT IF ANY EXCESS MATERIAL IS TO BE DISPOSED OF WITHIN THE CITY LIMITS OF TULSA.

16. ANY CHANGES FROM APPROVED PLANS SHALL BE SUBMITTED TO THE CITY OF TULSA FOR WRITTEN APPROVAL PRIOR TO INSTALLATION.

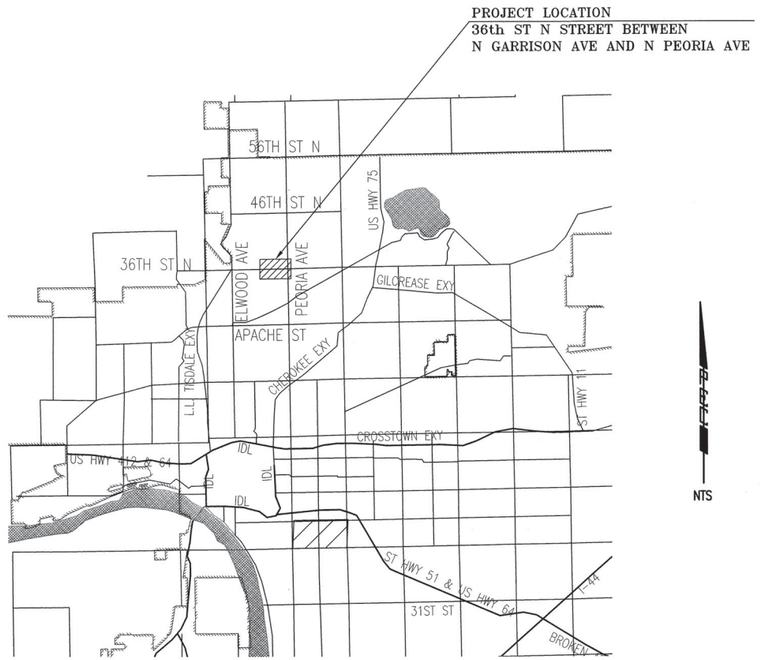

PROJECT LOCATION
KEY MAP

BEFORE YOU DIG 811 1-800-522-OKIE CALL OKIE

LICENSED PROFESSIONAL ENGINEER JASON P. DICKMAN 27639 OKLAHOMA
07/19/2020

REVISION	BY	DATE

WATERLINE GENERAL NOTES

PROJECT NO. 144200

ARTERIAL STREET REHABILITATION AND WATERLINE REPLACEMENT – 36TH ST. N. – MLK BLVD TO PEORIA AVE.

CITY OF TULSA, OKLAHOMA
ENGINEERING SERVICES DEPARTMENT

PLANS AND ESTIMATES PREPARED BY: PEC PROFESSIONAL ENGINEERING CONSULTANTS, P.A. 1924 S. UTICA AVE., SUITE 1400 TULSA, OK 74104 918-664-5400 www.pec1.com

DRAWN	BFS	01/2020	APPROVED:
DESIGNED	JPD	01/2020	
SURVEY			
PROJ. MGR.	JPH	8/20	
LEAD ENGR.	JPW	8/2020	
FIELD MGR.	BFS	8/20	
RECOMMENDED: DESIGN MANAGER	HRS	9.20	CITY ENGINEER

FILE: DRAWING: DATE: 10/30/20

ATLAS PAGE NO: 218, 219, 281, 282 SHEET 7 OF 165 SHEETS

Saved: 06-16-2020 4:48:48 AM by: JASON.DICKMAN
Print Scale: 1:1 07-19-2020 9:02:18 PM by: MISSY.SOMMERS
U:\Tulsa\2015\15K40\000\Mun\Drawings\15K40-C-Notes

PAY ITEM NOTES (TYPICAL) - (REVISED 09/24/2018)

1. TESTING AND CHLORINATION OF WATER MAINS SHALL BE PERFORMED BY THE CITY OF TULSA. TESTING, CHLORINATION, AND FLUSHING SHALL BE DONE IN ACCORDANCE WITH SECTION 109.3 OF THE GENERAL SPECIFICATIONS.

   A. CONTRACTOR SHALL FURNISH AND INSTALL TEMPORARY PLUGS WITH ADEQUATE BLOCKING OR RESTRAINTS, PLUS CORPORATION STOPS, AS DIRECTED BY CITY TESTING PERSONNEL, THEN, ONCE TESTING, CHLORINATION AND FLUSHING BY CITY PERSONNEL IS COMPLETED, REMOVE TEMPORARY BLOCKING AND TIE INTO EXISTING SYSTEM, USING FITTINGS SWABBED INTERNALLY WITH 2% BLEACH SOLUTION.

   B. TESTING, CHLORINATION, AND FLUSHING OF NEW WATER MAIN SHALL BE PERFORMED BY CITY PERSONNEL ON MAINS WHICH ARE PHYSICALLY DISCONNECTED FROM THE EXISTING WATER SYSTEM. TESTING, CHLORINATION, AND FLUSHING OF NEW WATER MAINS SHALL NOT BE PERFORMED AGAINST VALVES WHICH ARE PHYSICALLY CONNECTED TO EXISTING SYSTEM.

   C. ALL COSTS FOR TEMPORARY PLUGS, BLOCKING, RESTRAINING, CORPORATION STOPS, TUBING, THREADED CONNECTIONS, BLEACH AND OTHER INCIDENTALS SHALL BE INCLUDED IN THE UNIT PRICE BID FOR PIPE.

2. BURIED BOLTS, HARNESS LUGS, AND COUPLINGS SHALL BE GIVEN TWO COATS OF KOPPER'S BITUMASTIC 300-M (DRY MIL THICKNESS OF 16 MILS) OR EQUAL. COST TO BE INCLUDED IN UNIT PRICE BID FOR PIPE AND FITTINGS.

3. CONTRACTOR TO EXCAVATE ALL UTILITY CROSSINGS AHEAD OF PIPE LAYING SO THAT THE GRADES CAN BE ADJUSTED ON THE PROPOSED WATER MAIN TO AVOID UTILITY CONFLICTS. FAILURE TO DO SO SHALL NOT ENTITLE THE CONTRACTOR TO CLAIM EXTRA COMPENSATION FOR ADJUSTMENTS TO THE PROPOSED WATER MAIN. COST FOR EXCAVATING UTILITY CROSSINGS SHALL BE INCLUDED IN UNIT PRICE BID FOR PIPE.

4. CONTRACTOR SHALL INSURE ALL POLES WHICH ARE AFFECTED BY TRENCHING CONDITIONS ARE BRACED BY OWNERS. PAYMENT SHALL BE INCLUDED IN "RIGHT-OF-WAY CLEARING AND RESTORING". NO ADDITIONAL PAYMENT SHALL BE MADE.

5. ALL HYDRANTS, VALVES AND OTHER FITTINGS FROM ABANDONED WATER MAINS SHALL BE SALVAGED AND DELIVERED TO SOUTH YARD, 2317 S JACKSON. PAYMENT TO BE MADE UNDER RIGHT OF WAY CLEARING AND RESTORING. NO ADDITIONAL PAYMENT SHALL BE MADE.

6. CONTRACTOR SHALL REPAIR ANY IRRIGATION SYSTEMS, ROOF DRAINS, AND FENCING DAMAGED IN THE ZONE OF CONSTRUCTION DURING THE COURSE OF CONSTRUCTION TO SATISFACTION OF THE PROPERTY OWNER. PAYMENT SHALL BE INCLUDED IN RIGHT-OF-WAY CLEARING AND RESTORING. NO ADDITIONAL PAYMENT SHALL BE MADE.

7. NOT USED.

8. ALL COSTS FOR COMPONENTS NECESSARY TO RESTRAIN JOINTS FOR PIPE AND FITTINGS DESIGNATED RESTRAINED JOINT ("RJ") SHALL BE INCLUDED IN UNIT PRICE BID FOR PIPE OR FITTINGS.

   A. DUCTILE IRON PIPE RESTRAINED JOINT SYSTEMS: US PIPE TRFLEX, GRIFFIN SNAPLOK, MCWANE THRUSTLOCK, AMERICAN FLEXRING, EBAA MEGALUG, STAR STARGRIP, SMITH-BLAIR CAMLOCK, CLOW TUFGRIP OR EQUAL SHALL BE USED ON THIS PROJECT. SHOULD RJ PIPE BE SPECIFIED THROUGH UNCASED BORES, ONLY USPIPE TRFLEX, GRIFFIN SNAPLOK, MCWANE THRUSTLOCK, OR AMERICAN FLEXRING IS TO BE USED. LOCKING GASKETS NOT PERMITTED;

   B. POLYVINYL CHLORIDE (PVC) RESTRAINED JOINT SYSTEMS: EBAA MEGALUG, STAR STARGRIP OR EQUAL SHALL BE USED ON THIS PROJECT. LOCKING GASKETS NOT PERMITTED.

   C. HIGH DENSITY POLYETHYLENE (HDPE) RESTRAINED JOINT SYSTEMS: EBAA MEGALUG, STAR STARGRIP OR EQUAL SHALL BE USED ON THIS PROJECT.

   NO ADDITIONAL PAYMENT SHALL BE MADE.

9. ALL CUT ENDS AND WHERE SALVAGED FITTINGS HAVE BEEN REMOVED FROM ABANDONED WATER LINES LEFT IN PLACE, SHALL BE PLUGGED WITH 24-IN OF CONCRETE INSIDE THE PIPE. COST OF CONCRETE PLUGGING TO BE INCLUDED IN UNIT PRICE BID FOR PIPE. NO ADDITIONAL PAYMENT SHALL BE MADE.

10. NOT USED.

11. DETECTABLE MYLAR MARKING TAPE SHALL BE INSTALLED OVER DUCTILE IRON PIPE AS PER CONST SPEC 307.3 AND 307.4. COST WILL BE INCLUDED IN COST OF DUCTILE IRON PIPE.

12. ALL LABOR, MATERIALS, AND EQUIPMENT TO CONNECT PROPOSED WATER MAINS TO EXISTING WATER MAINS ARE INCLUDED IN COST OF SLEEVES/ADAPTORS. CONTRACTOR TO EXCAVATE ALL EXISTING WATER MAINS AHEAD OF PIPE LAYING SO THAT THE GRADES CAN BE ADJUSTED ACCORDINGLY. FAILURE TO DO SO SHALL NOT ENTITLE THE CONTRACTOR TO CLAIM EXTRA COMPENSATION FOR ADJUSTMENTS TO THE PROPOSED WATER MAIN. COST FOR EXCAVATING EXISTING WATER MAINS SHALL BE INCLUDED IN UNIT PRICE BID FOR SLEEVES. NO ADDITIONAL PAYMENT SHALL BE MADE.

13. NOT USED.

14. CONTRACTOR IS REMINDED TO BACKFILL ALL TRENCHES EXCAVATED ACROSS ANY EXISTING OR PROPOSED DRIVING OR PARKING SURFACE WITH 1½ -IN TYPE A AGGREGATE BASE, PLACED IN 8-INCH MAXIMUM LIFTS AND COMPACTED TO 98% MODIFIED PROCTOR DENSITY. COST TO BE INCLUDED IN COST OF EXCAVATION AND BACKFILL. NO ADDITIONAL PAYMENT SHALL BE MADE.

15. WATER SERVICE CONNECTIONS SHALL INCLUDE COST OF MATERIAL, LABOR AND EQUIPMENT TO REMOVE AND INSTALL SADDLES, SERVICE CLAMPS, CORPORATION STOPS, BENDS, 3-PART UNIONS, COUPLINGS, SETTERS AND ANY OTHER INCIDENTALS REQUIRED FOR A COMPLETE WATER SERVICE CONNECTION WITH EXCEPTION OF METER CANS, RIMS AND LIDS. NO ADDITIONAL PAYMENT SHALL BE MADE. METER CANS, LIDS AND RIMS SHALL BE PAID AS A SEPARATE BID ITEM.

   A. SHORT SERVICE SHALL BE ANY SERVICE LINE THAT IS 25-FEET OR LESS IN LENGTH. SHORT SERVICES DO NOT INCLUDE PAVEMENT REPLACEMENT. I.E. ¾-INCH WATER SERVICE CONNECTIONS (SHORT SERVICE)

   B. LONG SERVICE SHALL BE ANY SERVICE LINE THAT IS GREATER THAN 25-FEET UP TO 80-FEET IN LENGTH. LONG SERVICES INCLUDE PAVEMENT REPLACEMENT AND/ OR COST TO BORE. EXAMPLE: ¾-IN WATER SERVICE CONNECTIONS (LONG SERVICE)

   C. SHORT AND LONG SERVICE LINES EXCEEDING THE ABOVE PARAMETERS WILL BE COMPENSATED FOR LINEAR FOOTAGE ABOVE AND BEYOND. COMPENSATION SHALL BE PAID AS "SERVICE LINES, EXTENSION", PER LF

16. SERVICE LINES ON NON-ARTERIALS SHALL BE EITHER COPPER TUBING (TYPE K SOFT ANNEALED CONFORMING TO ASTM B 88) OR PEX TUBING (UPONOR AQUA PEX 5206 BLUE CONFORMING TO ASTM F876/F877/F2023). PEX TUBING IS NOT PERMITTED WITHIN ARTERIAL RIGHT OF WAY. WHEN CONTRACTOR ELECTS TO USE PEX TUBING:

   A. ¾-INCH WATER SERVICE CONNECTION SHALL USE 1-INCH PEX TUBING MINIMUM
   B. 1-INCH WATER SERVICE CONNECTION SHALL USE 1½-INCH PEX TUBING MINIMUM

17. CONTRACTOR'S PLUMBER SHALL PROVIDE AN INFORMATIONAL BROCHURE TO THE PROPERTY OWNERS OUTLINING THE STEPS REQUIRED TO THOROUGHLY FLUSH THEIR WATERLINES AFTER CONNECTION TO THE NEW WATER MAIN. ALL COSTS TO PRODUCE AND DISTRIBUTE THE BROCHURE SHALL BE INCLUDED IN THE PRICE BID FOR THIS ITEM.

18. THE "OWNER ALLOWANCE" CAN BE USED FOR VARIOUS WORK AND MISCELLANEOUS ITEMS NOT IDENTIFIED IN THE CONTRACT DOCUMENTS WITH THE FOLLOWING PROVISIONS: THE ALLOWANCE SHALL BE USED FOR COST OF MATERIALS, LABOR, INSTALLATION AND OVERHEAD AND PROFIT FOR ADDITIONAL WORK AND MISCELLANEOUS ITEMS THAT ARE NOT IDENTIFIED IN THE CONSTRUCTION DOCUMENTS AND PLANS, AND NOT INCLUDED IN THE BID ITEMS OF THE CONTRACT.

   A. THE ALLOWANCE SHALL BE USED ONLY AT THE DISCRETION OF THE CITY. ANY ALLOWANCE BALANCE REMAINING AT THE COMPLETION OF THE PROJECT WILL BE CREDITED BACK TO THE CITY ON THE FINAL APPLICATION FOR PAYMENT SUBMITTED BY THE CONTRACTOR.

   B. THE CONTRACTOR SHALL PROVIDE, TO THE CITY, A WRITTEN REQUEST FOR THE USE OF ANY ALLOWANCE, WITH A SCHEDULE OF VALUES, AND ALL ASSOCIATED BACKUP INFORMATION, INCLUDING ANY TIME EXTENSIONS REQUIRED TO PERFORM THE WORK.

   C. THE CONTRACTOR SHALL PROCEED WITH THE WORK INCLUDED IN THE ALLOWANCE ONLY AFTER RECEIVING A WRITTEN ORDER, FROM THE ENGINEER AND CITY AUTHORIZING SUCH WORK. PROCEEDING WITH WORK IN THE ALLOWANCE WITHOUT A WRITTEN ORDER FROM THE CITY WILL BE AT THE CONTRACTOR'S EXPENSE.

19. NOT USED.

20. NOT USED.

21. TOP OF VALVE BOX SHALL BE FLUSH WITH FINISHED GRADE.

22. THE CONTRACTOR SHALL RESTORE ALL DISTURBED AREAS TO A CONDITION EQUAL TO OR BETTER THAN THE EXISTING IMPROVEMENTS. LIMITS OF DISTURBANCE SHALL NOT EXCEED 9-FEET CENTERED ON THE WATERLINE. ANY DISTURBANCE OUTSIDE OF THIS AREA SHALL BE RESTORED AT THE CONTRACTORS EXPENSE. STREETS, DRIVEWAYS AND ASSOCIATED ITEMS SHALL BE PAID FOR UNDER OTHER ITEMS OF WORK.

23. THE CONTRACTOR SHALL RESTORE ALL DISTURBED GRASS AREAS TO A CONDITION EQUAL TO OR BETTER THAN THE EXISTING CONDITION. THE CONTRACTOR SHALL REPLACE THE SOD TO MATCH IN-KIND AND QUALITY. LIMITS OF DISTURBANCE SHALL NOT EXCEED 9-FEET CENTERED ON THE WATERLINE. ANY DISTURBANCE OUTSIDE OF THIS AREA SHALL BE RESTORED AT THE CONTRACTORS EXPENSE.

24. SPOT ELEVATIONS ON THE MAIN WATER LINE RELATIVE TO FINISHED GRADE SHALL BE PROVIDED AT EACH 100-FT INTERVAL, COMPLETE WITH STATION AND OFFSET. IN ADDITION, ALL VALVES, FITTINGS, FIRE HYDRANTS (TOP OF NUT) AND OTHER MAJOR APPURTENANT ITEMS SHALL BE SHOWN WITH THE PROPER DESCRIPTION, STATION, OFFSET (NORTHING, EASTING) AND ELEVATION PER PLAN SURVEY CONTROL DATUM.

25. SPOT ELEVATIONS ON WATER METER CANS, VAULTS, SHALL BE SHOWN WITH THE PROPER DESCRIPTION (METER TYPE, METER SIZE, METER NUMBER, SERVICE MATERIAL, SERVICE SIZE), STATION, OFFSET (NORTHING, EASTING) AND ELEVATION PER PLAN SURVEY CONTROL DATUM.

26. NOT USED.

27. PRESSURE TESTING AND CHLORINATION OF WATER MAINS SHALL NOT BE PERFORMED UNTIL THE CITY INSPECTOR HAS RECEIVED REQUIRED CONSTRUCTION AS-BUILT RECORDS.

28. NOT USED.

ITEM NO.	SPEC. NO.	ITEM	PAY ITEM NOTE	UNIT	QUANTITY
137	SPECIAL	OWNER ALLOWANCE	18	ALLOW	1
138	SPECIAL	CONSTRUCTION AS-BUILT	24, 25, 27	EA	1
139	COT 301	RIGHT-OF-WAY CLEARING AND RESTORATION, COMPLETE IN PLACE	4, 5, 6, 22	SY	2100
140	COT 302	EXCAVATION AND BACKFILL, UNCLASSIFIED	14	CY	390
141	COT 307	6 INCH DIP, CL51 POLYETHYLENE WRAPPED	1, 2, 3, 9, 11, 27	LF	33
142	COT 307	6 INCH DIP, CL51 POLYETHYLENE WRAPPED (RJ)	1, 2, 3, 8, 9, 11, 27	LF	414
143	COT 307	12 INCH DIP, CL50 POLYETHYLENE WRAPPED	1, 2, 3, 9, 11, 27	LF	700
144	COT 307	12 INCH DIP, CL50 POLYETHYLENE WRAPPED (RJ)	1, 2, 3, 8, 9, 11, 27	LF	944
145	COT 312	12 INCH DUCTILE IRON 11-1/4 DEGREE BEND (RJ)	2, 8	EA	10
146	COT 312	6 INCH DUCTILE IRON 22-1/2 DEGREE BEND (RJ)	2, 8	EA	1
147	COT 312	6 INCH DUCTILE IRON 45 DEGREE BEND (RJ)	2, 8	EA	18
148	COT 312	12 INCH DUCTILE IRON 45 DEGREE BEND (RJ)	2, 8	EA	10
149	COT 312	6 INCH X 6 INCH DUCTILE IRON TEE (RJ)	2, 8	EA	4
150	COT 312	12 INCH X 12 INCH DUCTILE IRON TEE (RJ)	2, 8	EA	3
151	COT 312	12 INCH X 6 INCH DUCTILE IRON TEE (RJ)	2, 8	EA	6
152	COT 312	12 INCH X 6 INCH DUCTILE IRON CROSS (RJ)	2, 8	EA	1
153	COT 312	12 INCH DUCTILE IRON SLEEVE (RJ)	2, 8, 12	EA	1
154	COT 315	3/4 INCH WATER SERVICE CONNECTION (LONG)	15, 16, 17	EA	1
155	COT 315	3/4 INCH WATER SERVICE CONNECTION (SHORT)	15, 16, 17	EA	1
156	COT 316	1 INCH WATER SERVICE CONNECTION (LONG)	15, 16, 17	EA	1
157	COT 317	1.5 INCH WATER SERVICE CONNECTION (LONG)	15, 16, 17	EA	1
158	COT 317	6" GATE VALVE (RJ)	8	EA	9
159	COT 317	12" GATE VALVE (RJ)	8	EA	9
160	COT 317	2" AIR RELIEF VALVE		EA	3
161	COT 312	2" X 12" TAPPING SLEEVE (RJ)	2, 8	EA	4
162	COT 317	3-WAY FIRE HYDRANT, IN PLACE		EA	4
163	COT 318	VALVE BOX	21	EA	19
164	COT 404	ABANDON-IN-PLACE 6" WATERLINE	9	LF	1535
165	COT 404	ABANDON-IN-PLACE 12" WATERLINE	9	LF	275

BEFORE YOU DIG 811 1-800-522-OKIE CALL OKIE

LICENSED PROFESSIONAL ENGINEER JASON P. DICKMAN 27639 OKLAHOMA
07/19/2020

SUMMARY OF WATERLINE PAY QUANTITIES

PROJECT NO. 144200

ARTERIAL STREET REHABILITATION AND WATERLINE REPLACEMENT – 36TH ST. N. – MLK BLVD TO PEORIA AVE.

CITY OF TULSA, OKLAHOMA
ENGINEERING SERVICES DEPARTMENT

PLANS AND ESTIMATES PREPARED BY: PEC PROFESSIONAL ENGINEERING CONSULTANTS, P.A. 1924 S. UTICA AVE., SUITE 1400 TULSA, OK 74104 918-664-5400 www.pec1.com

REVISION	BY	DATE

DRAWN	BFS	01/2020	APPROVED:
DESIGNED	JPD	01/2020	
SURVEY			
PROJ. MGR.	JPH	8/20	
LEAD ENGR.	CSW	8/2020	
FIELD MGR.		8/20	
RECOMMENDED: DESIGN MANAGER	HAS	9-20	CITY ENGINEER

FILE: DRAWING: DATE: 10/30/20

ATLAS PAGE NO: 218, 219, 281, 282 SHEET 8 OF 165 SHEETS

Saved: 07-19-2020 7:43:51 PM by: JASON.DICKMAN
Plot: Scale: 1:1 07-19-2020 9:02:29 PM by: MISSY.SOWARDS
U:\Tulsa\2015\15K40\000\Mun\Drawings\15K40-C-Quantities

METER SCHEDULE

ADDRESS	OWNER	LOT AND BLOCK	C/L ROAD STATION	C/L ROAD OFFSET	METER #	SIZE	3/4" SERVICE LINE	1" SERVICE LINE	1 1/2" SERVICE LINE	PRIVATE SERVICE CONNECTION BY LICENSED PLUMBER
							L.F.	L.F.	L.F.	EA.
3538 N HARTFORD AVE E	MOHAMMAD NAEEM	LOT 1, BLOCK 6	124+77.54	29.38' RT						1
591 E 36TH ST N	BOARD OF REGENTS, UNIVERSITY OF OKLAHOMA	PART BLOCK 1	124+85.48	35.78' LT	51741785	1"		35.78'		1
725 E 36TH ST N	FAITH CHRISTIAN FELLOWSHIP NORTH	ALL BLOCK 2	127+26.59	23.84' LT	60370888	1.5"			23.84'	1
801 E 36TH ST N	COLBERT-GRANT'S INVESTMENTS LLC	LOT 1	133+66.97	37.46' LT	17092372	3/4"	34.4'6			1

WATER VALVE AND FIRE HYDRANT SCHEDULE

DESCRIPTION	C/L ROAD STATION	C/L ROAD OFFSET	NORTHING	EASTING	ELEVATION
FIRE HYDRANT	STA. 128+56.43	35.03' RT.	445,129.5669	2,563,303.8671	637.87
FIRE HYDRANT	STA. 133+14.40	35.60' RT.	445,139.6412	2,563,761.7274	648.10
FIRE HYDRANT	STA. 138+76.17	33.00' RT.	445,155.3036	2,564,323.2852	647.81
FIRE HYDRANT	STA. 152+22.53	42.50' LT.	445,262.0801	2,565,667.5231	626.56
12" RJ GATE VALVE	STA. 122+74.49	40.56' RT.	445,110.5135	2,562,722.2103	640.70
12" RJ GATE VALVE	STA. 122+80.37	27.69' RT.	445,123.5075	2,562,727.7856	639.25
12" RJ GATE VALVE	STA. 125+89.64	33.97' RT.	445,124.4271	2563037.1213	635.50
12" RJ GATE VALVE	STA. 126+37.65	34.03' RT.	445,125.48	2563085.1160	634.50
6" RJ GATE VALVE	STA. 126+41.27	49.63' RT.	445,120.45	2563085.2685	634.50
6" RJ GATE VALVE	STA. 128+56.43	35.03' RT.	445,129.57	2563303.8671	637.87
6" RJ GATE VALVE	STA. 133+14.40	35.60' RT.	445,139.64	2563761.7274	648.10
12" RJ GATE VALVE	STA. 135+78.69	40.96' RT.	445,140.4215	2,564,026.0710	650.90
6" RJ GATE VALVE	STA. 105+25.25	59.42' LT.	445,169.8015	2,560,971.1156	671.71
6" RJ GATE VALVE	STA. 105+29.92	39.43' RT.	445,071.0882	2,560,978.0808	668.67
6" RJ GATE VALVE	STA. 111+85.16	38.03' RT.	445,087.7162	2,561,633.1157	652.44
6" RJ GATE VALVE	STA. 113+10.46	37.77' RT.	445,090.8958	2,561,758.3717	649.03
6" RJ GATE VALVE	STA. 139+04.42	55.92' LT.	445,244.8558	2,564,349.4580	650.54
12" RJ GATE VALVE	STA. 139+08.13	33.44' RT.	445,155.6044	2,564,355.2466	645.74
12" RJ GATE VALVE	STA. 138+68.67	32.90' RT.	445,155.2255	2,564,315.7867	648.64
12" RJ GATE VALVE	STA. 152+12.69	37.57' RT.	445,181.7986	2,565,659.5455	626.49
12" RJ GATE VALVE	STA. 152+22.64	46.27' LT.	445,272.6300	2,565,664.6064	626.50
6" RJ GATE VALVE	STA. 152+22.53	42.50' LT.	445,262.0801	2,565,667.5231	626.56





07/19/2020

REVISION	BY	DATE

METER AND VALVE SCHEDULES

PROJECT NO. 144200

ARTERIAL STREET REHABILITATION AND WATERLINE REPLACEMENT – 36TH ST. N. – MLK BLVD TO PEORIA AVE.

CITY OF TULSA, OKLAHOMA
ENGINEERING SERVICES DEPARTMENT

PLANS AND ESTIMATES PREPARED BY: PEC PROFESSIONAL ENGINEERING CONSULTANTS, P.A. 1924 S. UTICA AVE., SUITE 1400 TULSA, OK 74104 918-664-5400 www.pec1.com

DRAWN	BFS	01/2020	APPROVED:
DESIGNED	JPD	01/2020	
SURVEY			
PROJ. MGR.	JPH	8/20	
LEAD ENGR.	CEW	8/2020	
FIELD MGR.	DRM	8/20	
RECOMMENDED: DESIGN MANAGER	HAS	9.20	CITY ENGINEER

FILE: DRAWING: DATE: 10/30/20

ATLAS PAGE NO: 218, 219, 281, 282 SHEET 9 OF 165 SHEETS

Saved 07-15-2020 4:50:56 PM by JASON.DICKMAN
Plot Scale 1:1 07-19-2020 9:02:45 PM by MISSY.SOMMERS
U:\Tulsa\2015\15640\000\Mark\Drawings\15K40-C-Meter-Valve Schedules

SUMMARY OF CONCRETE SIDEWALK (4" & 6") & SIDEWALK RAMP

ROADWAY	STATION		SIDE	CONCRETE SIDEWALK (4") (610A)	CONCRETE SIDEWALK (6") (610A)	REM. OF SIDEWALK (619B)	CURB RAMPS TYPE A (SPECIAL)	CURB RAMPS TYPE B (SPECIAL)	CURB RAMPS TYPE C (SPECIAL)	TACTILE WARN. DEVICE (610I)
				S.Y.	S.Y.	S.Y.	EA	EA	EA	S.F.
E 36TH ST N	100+32.84	102+68.27	LT	126.36	4.25	154.00		2		20
E 36TH ST N	102+83.53	104+00.00	LT	96.41	6.94	63.59				
E 36TH ST N	104+00.00	104+76.93	LT	68.36	0.00	44.57		1		16
E 36TH ST N	105+24.26	108+50.00	LT	289.74	0.00	187.26		1		16
E 36TH ST N	108+50.00	111+36.59	LT	254.79	0.00	165.05		1		16
E 36TH ST N	111+90.68	112+36.03	LT	33.06	6.00	36.20		1		16
E 36TH ST N	112+90.21	113+00.00	LT	1.57	5.97	4.94				
E 36TH ST N	113+00.00	115+96.96	LT	256.86	5.67	162.42				
E 36TH ST N	116+25.71	116+36.01	LT	0.00	9.18	4.88			1	32
E 36TH ST N	116+64.85	117+50.00	LT	71.08	5.69	45.34				
E 36TH ST N	117+50.00	122+00.00	LT	405.34	0.00	245.85				
E 36TH ST N	122+00.00	122+34.31	LT	32.32	0.00	21.22				
E 36TH ST N	125+67.59	125+84.90	LT	16.93	0.00	32.48		2		21
E 36TH ST N	126+43.12	126+50.51	LT	11.91	0.00	0.00				
E 36TH ST N	126+45.51	126+75.00	LT	29.69	0.00	36.40		1		16
E 36TH ST N	126+75.00	128+05.45	LT	108.98	5.83	70.80				
E 36TH ST N	128+51.57	131+00.00	LT	213.70	5.89	134.01				
E 36TH ST N	131+00.00	131+15.61	LT	6.77	5.85	9.12				
E 36TH ST N	131+61.99	132+54.94	LT	79.64	5.81	60.15		1		16
E 36TH ST N	133+14.58	134+23.36	LT	98.26	5.85	50.27		1		16
E 36TH ST N	134+46.86	135+23.92	LT	60.81	5.94	38.48		1		16
E 36TH ST N	135+66.97	136+28.49	LT	47.03	5.90	31.08		1		16
E 36TH ST N	136+62.62	137+34.93	LT	54.23	11.84	13.56				
E 36TH ST N	137+77.24	138+55.03	LT	61.86	5.86	108.56		1		16
E 36TH ST N	138+50.03	138+71.74	LT	17.27	0.00	0.00				
E 36TH ST N	138+98.50	139+19.65	LT	16.18	0.00	0.00				
E 36TH ST N	139+19.65	140+01.78	LT	70.34	5.78	68.16		1		
E 36TH ST N	140+29.52	141+62.00	LT	103.37	12.89	86.11			1	48
E 36TH ST N	141+86.00	143+85.00	LT	204.81	14.16	103.38				
E 36TH ST N	144+08.98	144+50.00	LT	31.45	7.11	22.56				
E 36TH ST N	144+50.00	146+46.00	LT	208.86	6.55	94.07				
E 36TH ST N	146+76.00	148+06.00	LT	136.07	12.04	68.44				
E 36TH ST N	148+46.00	149+00.00	LT	42.02	6.92	29.54				
E 36TH ST N	149+00.00	149+39.56	LT	36.43	7.11	25.90				
E 36TH ST N	149+61.56	151+51.90	LT	172.31	13.79	98.59				
E 36TH ST N	151+87.89	152+31.26	LT	27.59	6.67	21.55	2			20
E 36TH ST N	153+15.00	153+63.56	LT	41.50	0.00	47.34	2			20
E 36TH ST N	100+27.24	102+61.19	RT	206.69	6.20	0.00		2		26
E 36TH ST N	102+90.22	104+00.00	RT	90.62	6.19	0.00				
E 36TH ST N	104+00.00	105+79.87	RT	152.77	6.17	0.00				
E 36TH ST N	106+07.14	108+50.00	RT	208.67	6.15	0.00				
E 36TH ST N	108+50.00	109+34.94	RT	68.22	7.11	0.00				
E 36TH ST N	109+48.94	111+11.99	RT	128.96	14.20	0.00				
E 36TH ST N	111+28.02	113+00.00	RT	147.77	7.13	0.00				
E 36TH ST N	113+00.00	113+21.76	RT	12.22	6.95	0.00				
E 36TH ST N	113+46.76	114+48.81	RT	76.54	14.09	0.00				
E 36TH ST N	114+73.74	115+50.09	RT	53.51	14.18	0.00				
E 36TH ST N	115+66.09	117+50.00	RT	156.62	7.08	0.00				
E 36TH ST N	117+50.00	119+66.39	RT	185.14	6.92	0.00				
E 36TH ST N	119+88.79	120+62.58	RT	53.90	12.38	29.44				
E 36TH ST N	120+84.63	121+31.12	RT	25.40	13.81	0.00				
E 36TH ST N	121+44.74	121+91.96	RT	27.78	13.84	0.00				
E 36TH ST N	122+08.04	122+75.29	RT	52.74	6.93	0.00		1		16
E 36TH ST N	122+70.29	122+83.21	RT	7.40	0.00	0.00				
E 36TH ST N	123+37.58	124+10.25	RT	57.52	6.92	0.00		1		16
E 36TH ST N	124+24.27	125+92.75	RT	142.65	6.93	0.00		1		21
E 36TH ST N	125+87.74	126+05.18	RT	19.40	0.00	0.00				
E 36TH ST N	126+41.14	126+47.28	RT	4.47	0.00	0.00				
E 36TH ST N	126+42.28	126+75.00	RT	29.05	0.00	0.00		1		16
E 36TH ST N	126+75.00	127+66.47	RT	74.32	6.86	0.00				
E 36TH ST N	127+88.19	128+61.63	RT	50.81	14.09	0.00				
E 36TH ST N	128+97.45	131+00.00	RT	173.16	7.06	0.00				
E 36TH ST N	131+00.00	131+16.25	RT	7.42	6.93	0.00				
E 36TH ST N	131+50.35	132+00.98	RT	30.80	13.81	0.00				
E 36TH ST N	132+47.23	133+66.66	RT	92.29	14.05	0.00				
E 36TH ST N	133+90.73	134+27.77	RT	18.70	14.19	0.00				
E 36TH ST N	134+71.87	135+50.00	RT	62.34	7.09	0.00				
E 36TH ST N	135+50.00	135+52.47	RT	2.19	0.00	0.00		1		16
E 36TH ST N	135+96.61	138+25.13	RT	203.98	0.00	0.00		2		32
E 36TH ST N	138+38.69	140+00.00	RT	116.73	0.00	0.00		1		16
E 36TH ST N	140+00.00	141+39.00	RT	120.72	6.92	0.00				
E 36TH ST N	141+57.00	142+49.00	RT	65.49	13.80	0.00				
E 36TH ST N	142+69.00	144+50.00	RT	153.78	6.96	0.00				

SUMMARY OF CONCRETE SIDEWALK (4" & 6") & SIDEWALK RAMP

ROADWAY	STATION		SIDE	CONCRETE SIDEWALK (4") (610A)	CONCRETE SIDEWALK (6") (610A)	REM. OF SIDEWALK (619B)	CURB RAMPS TYPE A (SPECIAL)	CURB RAMPS TYPE B (SPECIAL)	CURB RAMPS TYPE C (SPECIAL)	TACTILE WARN. DEVICE (610I)
				S.Y.	S.Y.	S.Y.	EA	EA	EA	S.F.
E 36TH ST N	144+50.00	146+17.00	RT	141.33	7.11	0.00				
E 36TH ST N	146+29.00	147+15.00	RT	60.95	14.12	0.00				
E 36TH ST N	147+37.00	148+17.00	RT	66.45	14.13	0.00				
E 36TH ST N	148+39.00	149+00.00	RT	52.08	7.11	0.00				
E 36TH ST N	149+00.00	149+82.32	RT	69.07	6.60	0.00				
E 36TH ST N	150+09.69	150+69.00	RT	38.50	14.31	0.00				
E 36TH ST N	151+09.00	152+29.49	RT	105.44	7.11	0.00	2			20
E 36TH ST N	153+13.75	153+50.98	RT	23.79	0.00	29.25	2			20
TOTAL				7172.28	540.89	2444.56	8	25	2	520.00

SUMMARY OF SURFACING

ROADWAY	STATION TO STATION		AGG BASE TYPE A (303A)	SUBGRADE METHOD B (310B)	SEPARATOR FABRIC (325)	DOWEL JOINTED P.C.C. PAVT. (PLACEMENT) (9")(414B)	P.C. CONCRETE PAVEMENT (414G)	CLASS A CONCRETE (509B)	REMOVAL OF CONCRETE PAVEMENT (619B)	TYPE I PCC PATCH (SPECIAL)
			C.Y.	S.Y.	S.Y.	S.Y.	C.Y.	C.Y.	S.Y.	C.Y.
E 36TH ST N	100+00.00	104+00.00	209.20	627.61	930.52	541.82	135.46	2.47	792.37	0.00
E 36TH ST N	104+00.00	108+50.00	404.32	990.75	1424.91	600.16	150.04	1.25	972.47	55.55
E 36TH ST N	108+50.00	113+00.00	610.65	1291.83	1749.78	553.34	138.33	1.25	911.74	135.03
E 36TH ST N	113+00.00	117+50.00	478.00	1087.03	1569.78	540.64	135.16	1.25	861.19	86.74
E 36TH ST N	117+50.00	122+00.00	588.49	1270.63	1745.68	490.60	122.65	0.72	959.95	123.71
E 36TH ST N	122+00.00	126+75.00	624.99	1422.29	1845.22	669.56	167.39	3.96	733.03	113.17
E 36TH ST N	126+75.00	131+00.00	652.38	1434.66	1798.52	579.10	144.78	2.66	902.70	130.62
E 36TH ST N	131+00.00	135+50.00	659.35	1354.01	1791.33	513.12	128.28	2.53	744.52	156.01
E 36TH ST N	135+50.00	140+00.00	637.56	1395.96	1744.01	587.91	146.98	4.45	714.39	129.18
E 36TH ST N	140+00.00	144+50.00	852.81	2551.75	2883.08	2007.97	501.99	2.37	2088.11	1.67
E 36TH ST N	144+50.00	149+00.00	904.85	2714.56	3061.82	2193.33	548.33	1.95	2178.02	0.00
E 36TH ST N	149+00.00	154+00.00	1276.84	3830.53	4176.46	3308.69	827.17	2.52	3443.43	0.00
TOTALS			7899.44	19971.59	24721.10	12586.24	3146.56	27.37	15301.93	931.69

SUMMARY OF EARTHWORK

ROADWAY	STATION TO STATION	UNCLASSIFIED EXCAVATION 202(A)	EMBANKMENT +15%	EXCESS EXCAVATION
		C.Y.	C.Y.	C.Y.
36TH ST. N.	100+09.63 to 104+00.00	184	127	58
36TH ST. N.	104+00.00 to 108+50.00	407	365	42
36TH ST. N.	108+50.00 to 113+00.00	744	55	689
36TH ST. N.	113+00.00 to 117+50.00	642	87	555
36TH ST. N.	117+50.00 to 122+00.00	888	75	813
36TH ST. N.	122+00.00 to 126+75.00	1,130	32	1,098
36TH ST. N.	126+75.00 to 131+00.00	662	12	651
36TH ST. N.	131+00.00 to 135+50.00	1,156	7	1,149
36TH ST. N.	135+50.00 to 140+00.00	902	22	880
36TH ST. N.	140+00.00 to 144+50.00	2,374	75	2,299
36TH ST. N.	144+50.00 to 149+00.00	2,294	31	2,263
36TH ST. N.	149+00.00 to 153+51.29	1,718	0	1,718
	TOTALS	13,101	887	12,214

BEFORE YOU DIG 811 1-800-522-OKIE CALL OKIE

LICENSED PROFESSIONAL ENGINEER JASON P. DICKMAN 27639 OKLAHOMA

07/19/2020

REVISION	BY	DATE

SUMMARY SHEET 1

PROJECT NO. 144200

ARTERIAL STREET REHABILITATION AND WATERLINE REPLACEMENT – 36TH ST. N. – MLK BLVD TO PEORIA AVE.

CITY OF TULSA, OKLAHOMA
ENGINEERING SERVICES DEPARTMENT

PLANS AND ESTIMATES PREPARED BY: PEC PROFESSIONAL ENGINEERING CONSULTANTS, P.A. 1924 S. UTICA AVE., SUITE 1400 TULSA, OK 74104 918-664-5400 www.pec1.com

DRAWN	BFS	01/2020	APPROVED:
DESIGNED	JPD	01/2020	
SURVEY			
PROJ. MGR.		09/20	
LEAD ENGR.		7/20	
FIELD MGR.		8/20	
RECOMMENDED: DESIGN MANAGER		9-20	CITY ENGINEER

FILE: DRAWING: DATE: 10/30/20

ATLAS PAGE NO: 218, 219, 281, 282 SHEET 10 OF 165 SHEETS

$TIME$ $DATE$ $SCALE$ $USER$ SCALE: PLOTTED BY: XXX DSN#: $FILE$

SUMMARY OF DRIVEWAYS

ROADWAY	STATION	OFFSET	SIDE		TYPE	LENGTH	WIDTH	AREA	RADIUS		EXISTING SLOPE	PROPOSED SLOPE	6" CONCRETE DRIVEWAY (H.E.S.) 610(B)	AGGREGATE BASE TYPE A 303(A)	REMOVAL OF ASPHALT DRIVEWAY 619(B)
		FT.	LT.	RT.		FT.	FT.	S.F.	LT. (FT.)	RT. (FT.)	%	%	S.Y.	C.Y.	S.Y.
E. 36TH ST N	102+75.08	60.00		X	H.E.S. CONC.	23.18	35.93	973.92	15.00	15.00	1.67	2.12	108.21	18.04	114.21
E. 36TH ST N	102+75.97	55.00	X		H.E.S. CONC.	15.00	30.92	638.21	15.00	15.00	5.91	9.99	70.91	11.82	44.83
E. 36TH ST N	105+93.50	50.00		X	H.E.S. CONC.	27.19	25.84	867.02	15.00	15.00	1.41	5.07	96.34	16.06	72.61
E. 36TH ST N	109+41.94	44.06		X	H.E.S. CONC.	14.00	19.93	462.60	15.00	15.00	0.35	1.02	51.40	8.57	34.98
E. 36TH ST N	111+18.15	42.84		X	H.E.S. CONC.	16.00	21.53	431.36	10.00	10.00	2.68	3.36	47.93	7.99	37.72
E. 36TH ST N	112+61.30	60.00	X		H.E.S. CONC.	53.97	39.70	2339.46	15.00	15.00	7.95	8.00	259.94	43.32	230.64
E. 36TH ST N	113+34.28	39.84		X	H.E.S. CONC.	25.00	19.08	638.92	15.00	15.00	1.72	2.41	70.99	11.83	57.10
E. 36TH ST N	114+61.27	42.82		X	H.E.S. CONC.	24.93	22.18	721.66	15.00	15.00	3.36	3.14	80.18	13.36	68.96
E. 36TH ST N	115+58.01	42.60		X	H.E.S. CONC.	16.00	22.04	521.25	15.00	15.00	4.13	6.13	57.92	9.65	N/A
E. 36TH ST N	116+13.37	49.00	X		H.E.S. CONC.	28.75	28.69	883.83	15.00	5.00	6.35	8.00	98.20	16.37	88.97
E. 36TH ST N	116+47.65	49.00	X		H.E.S. CONC.	28.84	28.65	901.99	5.00	15.00	7.07	8.00	100.22	16.70	91.67
E. 36TH ST N	119+79.44	39.89		X	H.E.S. CONC.	23.50	19.24	611.68	15.00	15.00	3.55	0.63	67.96	11.33	53.26
E. 36TH ST N	120+72.30	39.50		X	H.E.S. CONC.	22.50	18.80	586.95	15.00	15.00	2.91	2.11	65.22	10.87	52.04
E. 36TH ST N	121+37.14	40.98		X	H.E.S. CONC.	15.00	20.17	467.20	15.00	15.00	4.97	4.78	51.91	8.65	35.18
E. 36TH ST N	122+00.00	39.97		X	H.E.S. CONC.	16.00	19.31	474.86	15.00	15.00	4.69	4.75	52.76	8.79	36.11
E. 36TH ST N	124+17.26	39.94		X	H.E.S. CONC.	14.00	19.18	433.60	15.00	15.00	4.20	5.92	48.18	8.03	N/A
E. 36TH ST N	127+77.33	41.51		X	H.E.S. CONC.	22.00	20.78	624.14	15.00	15.00	5.41	5.12	69.35	11.56	190.35
E. 36TH ST N	128+28.50	37.56	X		H.E.S. CONC.	45.83	17.25	948.70	15.00	15.00	5.34	5.51	105.41	17.57	86.80
E. 36TH ST N	128+79.63	49.05		X	H.E.S. CONC.	35.63	28.20	1161.42	15.00	15.00	7.79	8.47	129.05	21.51	119.11
E. 36TH ST N	131+33.35	46.16		X	H.E.S. CONC.	34.11	25.37	1025.99	15.00	15.00	5.40	4.61	114.00	19.00	113.86
E. 36TH ST N	131+38.78	37.67	X		H.E.S. CONC.	46.06	17.09	943.22	15.00	15.00	4.83	4.63	104.80	17.47	86.58
E. 36TH ST N	132+23.96	43.50		X	H.E.S. CONC.	46.32	22.74	1215.33	15.00	15.00	6.56	7.38	135.04	22.51	116.54
E. 36TH ST N	133+78.69	42.81		X	H.E.S. CONC.	24.07	22.10	698.65	15.00	15.00	2.45	3.05	77.63	12.94	113.47
E. 36TH ST N	134+37.12	36.92	X		H.E.S. CONC.	23.51	15.05	559.66	15.00	15.00	3.33	4.49	62.18	10.36	49.94
E. 36TH ST N	134+49.77	42.70		X	H.E.S. CONC.	44.10	21.91	1136.63	15.00	15.00	3.76	3.38	126.29	21.05	244.53
E. 36TH ST N	135+45.19	45.00	X		H.E.S. CONC.	23.80	24.49	750.21	15.00	15.00	6.97	7.97	83.36	13.89	69.47
E. 36TH ST N	136+46.00	50.00	X		H.E.S. CONC.	34.14	28.47	1220.05	15.00	15.00	9.24	8.00	135.56	22.59	234.96
E. 36TH ST N	136+07.60 to 138+11.31	–		X	–	–	–	–	–	–	–	–	–	–	403.50
E. 36TH ST N	137+59.27	48.86	X		H.E.S. CONC.	42.32	28.39	1182.83	15.00	15.00	5.79	6.93	131.43	21.90	263.07
E. 36TH ST N	140+16.09	49.00	X		H.E.S. CONC.	26.60	28.45	929.93	15.00	15.00	4.19	6.79	103.33	17.22	89.61
E. 36TH ST N	141+49.32	50.00		X	H.E.S. CONC.	18.00	29.50	754.92	15.00	15.00	-2.32	5.24	83.88	13.98	70.10
E. 36TH ST N	141+73.00	50.00	X		H.E.S. CONC.	24.00	30.37	802.99	10.00	10.00	4.90	7.34	89.22	14.87	91.06
E. 36TH ST N	142+59.00	50.00		X	H.E.S. CONC.	20.00	29.50	755.01	15.00	15.00	-1.55	7.87	83.89	13.98	71.13
E. 36TH ST N	143+99.85	50.00	X		H.E.S. CONC.	24.00	29.50	801.16	10.00	10.00	5.47	7.45	89.02	14.84	115.28
E. 36TH ST N	146+23.00	50.00		X	H.E.S. CONC.	12.00	29.50	396.73	5.00	5.00	4.44	3.44	44.08	7.35	N/A
E. 36TH ST N	146+62.06	50.00	X		H.E.S. CONC.	30.00	29.50	938.71	10.00	10.00	3.23	5.18	104.30	17.38	209.88
E. 36TH ST N	147+22.56	50.00		X	H.E.S. CONC.	22.00	29.50	697.42	15.00	15.00	6.74	6.94	77.49	12.92	42.65
E. 36TH ST N	148+28.00	50.00		X	H.E.S. CONC.	22.00	29.50	743.01	10.00	10.00	7.77	8.00	82.56	13.76	42.73
E. 36TH ST N	148+28.09	50.00	X		H.E.S. CONC.	40.00	29.50	1226.98	15.00	15.00	4.96	6.28	136.33	22.72	146.35
E. 36TH ST N	148+56.16 to 149+21.97	–		X	–	–	–	–	–	–	–	–	–	–	122.19
E. 36TH ST N	149+54.06	50.00	X		H.E.S. CONC.	22.00	29.50	615.39	15.00	15.00	4.62	5.94	68.38	11.40	60.29
E. 36TH ST N	149+96.00	50.00		X	H.E.S. CONC.	26.00	29.50	322.56	25.00	25.00	3.58	4.54	35.84	5.97	130.62
E. 36TH ST N	150+89.00	50.00		X	H.E.S. CONC.	40.00	29.50	1353.78	15.00	15.00	1.47	3.98	150.42	25.07	424.28
E. 36TH ST N	151+70.48	50.00	X		H.E.S. CONC.	30.00	29.50	811.41	15.00	15.00	2.90	8.09	90.16	15.03	165.65
TOTALS													3841.26	640.21	4892.28

SUMMARY OF CURB

ROADWAY	STATION TO STATION		SIDE	CONCRETE CURB (8" BARRIER-INTEGRAL) 609A	COMBINED CURB & GUTTER (6" BARRIER) 609B	COMBINED CURB & GUTTER (8" BARRIER) 609B	REMOVAL OF CURB AND GUTTER 619B
				L.F.	L.F.	L.F.	L.F.
E 36TH ST N	100+00.00	104+00.00	LT	227.96	43.80	0.00	43.80
E 36TH ST N	104+00.00	108+50.00	LT	341.95	102.97	0.00	102.95
E 36TH ST N	108+50.00	113+00.00	LT	374.41	126.06	0.00	126.05
E 36TH ST N	113+00.00	117+50.00	LT	342.47	182.03	0.00	181.99
E 36TH ST N	117+50.00	122+00.00	LT	454.26	216.97	0.00	216.95
E 36TH ST N	122+00.00	126+75.00	LT	110.76	225.39	0.00	189.95
E 36TH ST N	126+75.00	131+00.00	LT	330.25	191.75	0.00	191.02
E 36TH ST N	131+00.00	135+50.00	LT	252.45	124.63	0.00	125.30
E 36TH ST N	135+50.00	140+00.00	LT	166.39	203.77	0.00	203.28
E 36TH ST N	140+00.00	144+50.00	LT	280.88	0.00	343.50	325.64
E 36TH ST N	144+50.00	149+00.00	LT	356.90	0.00	365.13	348.00
E 36TH ST N	149+00.00	154+00.00	LT	180.33	0.00	335.61	330.98
E 36TH ST N	100+00.00	104+00.00	RT	270.45	22.02	0.00	22.00
E 36TH ST N	104+00.00	108+50.00	RT	316.45	59.86	0.00	59.85
E 36TH ST N	108+50.00	113+00.00	RT	310.31	130.77	0.00	130.75
E 36TH ST N	113+00.00	117+50.00	RT	278.38	93.13	0.00	93.11
E 36TH ST N	117+50.00	122+00.00	RT	399.77	172.00	0.00	171.98
E 36TH ST N	122+00.00	126+75.00	RT	110.91	362.56	0.00	362.52
E 36TH ST N	126+75.00	131+00.00	RT	330.25	206.97	0.00	206.50
E 36TH ST N	131+00.00	135+50.00	RT	252.45	227.84	0.00	228.25
E 36TH ST N	135+50.00	140+00.00	RT	216.40	341.29	0.00	346.26
E 36TH ST N	140+00.00	144+50.00	RT	283.37	0.00	386.42	380.00
E 36TH ST N	144+50.00	149+00.00	RT	295.80	0.00	383.70	352.00
E 36TH ST N	149+00.00	154+00.00	RT	178.21	0.00	290.28	290.41
TOTALS				6661.76	3033.81	2104.64	5029.54

SUMMARY OF EROSION CONTROL

ROADWAY	STATION TO STATION		SIDE		TEMP. SILT FENCE (221C)	TEMP. SEDIMENT FILTER (221D)
			LT.	RT.	L.F.	EA.
E 36TH ST N	100+17.00	104+82.00	X		221.12	0.00
E 36TH ST N	105+18.00	111+43.00	X		0	7.00
E 36TH ST N	111+80.00	125+94.00	X		841.04	5.00
E 36TH ST N	126+35.00	132+56.00	X		511.15	1.00
E 36TH ST N	133+13.00	138+70.00	X		0	0.00
E 36TH ST N	139+00.00	154+00.00	X		515.97	6.00
E 36TH ST N	100+14.00	122+77.00		X	1430.66	4.00
E 36TH ST N	123+30.00	126+05.00		X	192.32	2.00
E 36TH ST N	126+33.00	135+54.00		X	212.05	2.00
E 36TH ST N	135+90.00	138+32.00		X	0.00	0.00
E 36TH ST N	138+62.00	154+00.00		X	499.92	6.00
	TOTAL				4424.23	33.00

SUMMARY OF RETAINING WALLS

STATION TO STATION	SIDE	LOCATION	RETAINING WALL S.Y. (510A)
100+37.84 to 102+61.95	Lt.	RETAINING WALL A	87.2
114+00.00 to 115+86.45	Lt.	RETAINING WALL B	58.5
120+11.75 to 120+31.17	Lt.	RETAINING WALL C	2.9
140+38.26 to 140+66.43	Lt.	RETAINING WALL D	4.0
TOTAL			152.6

BEFORE YOU DIG 811 1-800-522-OKIE CALL OKIE

LICENSED PROFESSIONAL ENGINEER JASON P. DICKMAN 27639 OKLAHOMA

07/19/2020

REVISION	BY	DATE

SUMMARY SHEET 2

PROJECT NO. 144200

ARTERIAL STREET REHABILITATION AND WATERLINE REPLACEMENT – 36TH ST. N. – MLK BLVD TO PEORIA AVE.

CITY OF TULSA, OKLAHOMA
ENGINEERING SERVICES DEPARTMENT

PLANS AND ESTIMATES PREPARED BY: PEC PROFESSIONAL ENGINEERING CONSULTANTS, P.A. 1924 S. UTICA AVE., SUITE 1400 TULSA, OK 74104 918-684-5400 www.pec1.com

DRAWN	BFS	01/2020	APPROVED:
DESIGNED	JPD	01/2020	
SURVEY			
PROJ. MGR.			
LEAD ENGR.			
FIELD MGR.			
RECOMMENDED: DESIGN MANAGER			CITY ENGINEER

FILE: DRAWING: DATE:

ATLAS PAGE NO: 218, 219, 281, 282 SHEET 11 OF 165 SHEETS

$TIME$ $DATE$ $SCALE$ SCALE: $USER$ PLOTTED BY: XXX DSNR: $FILE$

SIGN SCHEDULE

SIGN LOCATION				SIGN TYPES	SIGN DIMENSION (IN X IN)	SF	ACTION	I-1/2" SIGN POST	I-3/4" SIGN POST	2" SIGN POST
SHT NO.	ALIGNMENT	STATION	OFFSET							
89	36TH ST N	99+95.03	40' LT	BIKE MAY USE FULL LANE (R4-11)	30 X 30	6.25	INSTALL	0.00	10.50	0.00
89	36TH ST N	100+50.09	32' RT	BIKE LANE (R3-17)	30 X 24	5.00	INSTALL	0.00	10.50	0.00
89	36TH ST N	100+50.09	32' RT	AHEAD (R3-17aP)	24 X 8	1.33	INSTALL	0.00	0.00	0.00
89	36TH ST N	102+16.77	33' LT	BIKE LANE (R3-17)	30 X 24	5.00	INSTALL	0.00	10.50	0.00
89	36TH ST N	102+16.77	33' LT	ENDS (R3-17bP)	24 X 8	1.33	INSTALL	0.00	0.00	0.00
89	36TH ST N	102+75.08	4.5' RT	ONE WAY (R6-1(R))	36 X 12	3.00	INSTALL	0.00	10.50	0.00
89	36TH ST N	102+76.02	4.5' LT	ONE WAY (R6-1(R))	36 X 12	3.00	INSTALL	0.00	10.50	0.00
89	36TH ST N	104+00.05	30' RT	SPEED LIMIT 40 (R2-1)	24 X 30	5.00	REMOVE & REPLACE	0.00	10.50	3.00
89	36TH ST N	104+81.29	51' LT	STOP SIGN (R1-1)	30 X 30	6.25	REMOVE & REPLACE	2.00	10.50	3.00
89	36TH ST N	104+81.29	51' LT	STREET NAME (D3-1)	9 X 42	5.25	REMOVE & REPLACE	0.00	0.00	0.00
89	36TH ST N	104+81.29	51' LT	STREET NAME (D3-1)	9 X 48	6.00	REMOVE & REPLACE	0.00	0.00	0.00
89	36TH ST N	105+33.76	3.6' LT	KEEP RIGHT (R4-7)	24 X 30	5.00	INSTALL	0.00	10.50	0.00
89	36TH ST N	105+93.50	4.3' RT	ONE WAY (R6-1(R))	36 X 12	3.00	INSTALL	0.00	10.50	0.00
89	36TH ST N	109+41.94	4.3' RT	ONE WAY (R6-1(R))	36 X 12	3.00	INSTALL	0.00	10.50	0.00
89	36TH ST N	111+42.22	38' LT	STOP SIGN (R1-1)	30 X 30	6.25	REMOVE & REPLACE	2.00	10.50	3.00
89	36TH ST N	111+42.22	38' LT	STREET NAME (D3-1)	9 X 42	5.25	REMOVE & REPLACE	0.00	0.00	0.00
89	36TH ST N	111+42.22	38' LT	STREET NAME (D3-1)	9 X 42	5.25	REMOVE & REPLACE	0.00	0.00	0.00
89	36TH ST N	112+01.95	3.6' LT	KEEP RIGHT (R4-7)	24 X 30	5.00	INSTALL	0.00	10.50	0.00
89	36TH ST N	112+06.00	26' RT	BUS STOP*			REMOVE & RESET	0.00	10.00	3.00
89	36TH ST N	112+61.30	4.3' LT	ONE WAY (R6-1(R))	36 X 12	3.00	INSTALL	0.00	10.50	0.00
89	36TH ST N	113+34.26	4.3' RT	ONE WAY (R6-1(R))	36 X 12	3.00	INSTALL	0.00	10.50	0.00
89	36TH ST N	114+61.27	4.3' RT	ONE WAY (R6-1(R))	36 X 12	3.00	INSTALL	0.00	10.50	0.00
89	36TH ST N	116+84.01	3.6' LT	KEEP RIGHT (R4-7)	24 X 30	5.00	INSTALL	0.00	10.50	0.00
89	36TH ST N	118+88.67	27' RT	PEDESTRIAN CROSSING (W11-2)	36 X 36	9.00	INSTALL	0.00	11.00	3.00
89	36TH ST N	118+88.67	27' RT	AHEAD (R3-17a)	30 X 12	2.50	INSTALL	0.00	0.00	0.00
89	36TH ST N	119+79.44	4.3' RT	ONE WAY (R6-1(R))	36 X 12	3.00	INSTALL	0.00	10.50	0.00
89	36TH ST N	120+20.50	31' RT	PEDESTRIAN CROSSING (W11-2)	36 X 36	9.00	INSTALL ON RRFB PEDESTAL	0.00	0.00	0.00
89	36TH ST N	120+20.50	31' RT	DOWNWARD DIAGONAL ARROW (W6-7p)	24 X 12	2.00	INSTALL ON RRFB PEDESTAL	0.00	0.00	0.00
89	36TH ST N	120+20.50	31' RT	PUSH BUTTON TO TURN ON WARNING LIGHTS (R10-25)	9 X 12	0.75	INSTALL ON RRFB PEDESTAL	0.00	0.00	0.00
89	36TH ST N	120+31.50	32' LT	PEDESTRIAN CROSSING (W11-2)	36 X 36	9.00	INSTALL ON RRFB PEDESTAL	0.00	0.00	0.00
89	36TH ST N	120+31.50	32' LT	DOWNWARD DIAGONAL ARROW (W6-7p)	24 X 12	2.00	INSTALL ON RRFB PEDESTAL	0.00	0.00	0.00
89	36TH ST N	120+31.50	32' LT	PUSH BUTTON TO TURN ON WARNING LIGHTS (R10-25)	9 X 12	0.75	INSTALL ON RRFB PEDESTAL	0.00	0.00	0.00
89	36TH ST N	120+72.30	4.3' RT	ONE WAY (R6-1(R))	36 X 12	3.00	INSTALL	0.00	10.50	0.00
89	36TH ST N	121+00.00	28' LT	BUS STOP*			REMOVE & RESET	0.00	10.00	3.00
89	36TH ST N	121+37.14	0.0 LT	ONE WAY (R6-1(R))	36 X 12	3.00	INSTALL	0.00	10.50	0.00
89	36TH ST N	121+81.28	27' LT	PEDESTRIAN CROSSING (W11-2)	36 X 36	9.00	INSTALL	0.00	11.00	3.00
89	36TH ST N	121+81.28	27' LT	AHEAD (R3-17a)	30 X 12	2.50	INSTALL	0.00	0.00	0.00
89	36TH ST N	123+29.99	48' RT	STOP SIGN (R1-1)	30 X 30	6.25	REMOVE & REPLACE	2.00	10.50	3.00
89	36TH ST N	123+29.99	48' RT	STREET NAME (D3-1)	9 X 42	5.25	REMOVE & REPLACE	0.00	0.00	0.00
89	36TH ST N	123+29.99	48' RT	STREET NAME (D3-1)	9 X 54	6.75	REMOVE & REPLACE	0.00	0.00	0.00
90	36TH ST N	123+58.34	26' LT	SPEED LIMIT 40 (R2-1)	24 X 30	5.00	REMOVE & REPLACE	0.00	10.50	3.00
90	36TH ST N	124+17.26	4.3' RT	ONE WAY (R6-1(R))	36 X 12	3.00	INSTALL	0.00	10.50	0.00
90	36TH ST N	127+77.33	4.5' RT	ONE WAY (R6-1(R))	36 X 12	3.00	INSTALL	0.00	10.50	0.00
90	36TH ST N	128+28.50	4.5' LT	ONE WAY (R6-1(R))	36 X 12	3.00	INSTALL	0.00	10.50	0.00
90	36TH ST N	128+79.63	4.5' RT	ONE WAY (R6-1(R))	36 X 12	3.00	INSTALL	0.00	10.50	0.00
90	36TH ST N	129+20.28	27' RT	SPEED LIMIT 40 (R2-1)	24 X 30	5.00	REMOVE & REPLACE	0.00	10.50	3.00
90	36TH ST N	132+66.69	50' LT	STOP SIGN (R1-1)	30 X 30	6.25	REMOVE & REPLACE	2.00	10.50	3.00
90	36TH ST N	132+66.69	50' LT	STREET NAME (D3-1)	9 X 42	5.25	REMOVE & REPLACE	0.00	0.00	0.00
90	36TH ST N	132+66.69	50' LT	STREET NAME (D3-1)	9 X 54	6.75	REMOVE & REPLACE	0.00	0.00	0.00
90	36TH ST N	132+83.55	4.3' LT	ONE WAY (R6-1(R))	36 X 12	3.00	INSTALL	0.00	10.50	0.00
90	36TH ST N	133+01.93	49' LT	DEAD END (W14-1)	36 X 36	9.00	REMOVE & REPLACE	0.00	11.00	3.00
90	36TH ST N	133+78.69	4.3' RT	ONE WAY (R6-1(R))	36 X 12	3.00	INSTALL	0.00	10.50	0.00
90	36TH ST N	134+36.47	4.3' LT	ONE WAY (R6-1(R))	36 X 12	3.00	INSTALL	0.00	10.50	0.00
90	36TH ST N	134+49.82	2.5' LT	ONE WAY (R6-1(R))	36 X 12	3.00	INSTALL	0.00	10.50	0.00
90	36TH ST N	135+93.02	44' RT	STOP SIGN (R1-1)	30 X 30	6.25	REMOVE & REPLACE	2.00	10.50	3.00
90	36TH ST N	135+93.02	44' RT	STREET NAME (D3-1)	9 X 42	5.25	REMOVE & REPLACE	0.00	0.00	0.00
90	36TH ST N	135+93.02	44' RT	STREET NAME (D3-1)	9 X 48	6.00	REMOVE & REPLACE	0.00	0.00	0.00
90	36TH ST N	137+56.72	4.3' LT	ONE WAY (R6-1(R))	36 X 12	3.00	INSTALL	0.00	10.50	0.00
90	36TH ST N	138+65.94	45' RT	STOP SIGN (R1-1)	30 X 30	6.25	REMOVE & REPLACE	2.00	10.50	3.00
90	36TH ST N	138+65.94	45' RT	STREET NAME (D3-1)	9 X 42	5.25	REMOVE & REPLACE	0.00	0.00	0.00
90	36TH ST N	138+65.94	45' RT	STREET NAME (D3-1)	9 X 48	6.00	REMOVE & REPLACE	0.00	0.00	0.00
90	36TH ST N	138+67.63	46' LT	STOP SIGN (R1-1)	30 X 30	6.25	REMOVE & REPLACE	2.00	10.50	3.00
90	36TH ST N	138+67.63	46' LT	STREET NAME (D3-1)	9 X 42	5.25	REMOVE & REPLACE	0.00	0.00	0.00
90	36TH ST N	138+67.63	46' LT	STREET NAME (D3-1)	9 X 48	6.00	REMOVE & REPLACE	0.00	0.00	0.00
90	36TH ST N	139+51.57	27' RT	PEDESTRIAN/BICYCLE CROSSING (W11-15)	36 X 36	9.00	INSTALL	0.00	11.00	3.00
90	36TH ST N	139+51.57	27' RT	AHEAD (R3-17a)	30 X 12	2.50	INSTALL	0.00	0.00	0.00

SIGN SCHEDULE

SIGN LOCATION				SIGN TYPES	SIGN DIMENSION (IN X IN)	SF	ACTION	I-1/2" SIGN POST	I-3/4" SIGN POST	2" SIGN POST
SHT NO.	ALIGNMENT	STATION	OFFSET							
90	36TH ST N	140+16.09	4.3' LT	ONE WAY (R6-1(R))	36 X 12	3.00	INSTALL	0.00	10.50	0.00
90	36TH ST N	140+73.88	46' RT	NO MOTOR VEHICLES (R5-3)	24 X 24	4.00	REMOVE & REPLACE	0.00	10.00	3.00
90	36TH ST N	140+79.00	33' RT	PEDESTRIAN/BICYCLE CROSSING (W11-15)	36 X 36	9.00	INSTALL ON RRFB PEDESTAL	0.00	0.00	0.00
90	36TH ST N	140+79.00	33' RT	DOWNWARD DIAGONAL ARROW (W6-7p)	24 X 12	2.00	INSTALL ON RRFB PEDESTAL	0.00	0.00	0.00
90	36TH ST N	140+79.00	33' RT	PUSH BUTTON TO TURN ON WARNING LIGHTS (R10-25)	9 X 12	0.75	INSTALL ON RRFB PEDESTAL	0.00	0.00	0.00
90	36TH ST N	140+81.89	43' LT	STOP SIGN (R1-1)	18 X 18	2.25	REMOVE & REPLACE	0.00	9.50	3.00
90	36TH ST N	140+93.12	48' RT	STOP SIGN (R1-1)	18 X 18	2.25	REMOVE & REPLACE	0.00	9.50	3.00
90	36TH ST N	140+99.00	30' LT	PEDESTRIAN/BICYCLE CROSSING (W11-15)	36 X 36	9.00	INSTALL ON RRFB PEDESTAL	0.00	0.00	0.00
90	36TH ST N	140+99.00	30' LT	DOWNWARD DIAGONAL ARROW (W6-7p)	24 X 12	2.00	INSTALL ON RRFB PEDESTAL	0.00	0.00	0.00
90	36TH ST N	140+99.00	30' LT	PUSH BUTTON TO TURN ON WARNING LIGHTS (R10-25)	9 X 12	0.75	INSTALL ON RRFB PEDESTAL	0.00	0.00	0.00
90	36TH ST N	140+99.53	42' LT	NO MOTOR VEHICLES (R5-3)	24 X 24	4.00	REMOVE & REPLACE	0.00	10.00	3.00
90	36TH ST N	141+17.00	3.3' RT	KEEP RIGHT (R4-7)	24 X 30	5.00	INSTALL	0.00	10.50	0.00
90	36TH ST N	142+43.26	35' LT	PEDESTRIAN/BICYCLE CROSSING (W11-15)	36 X 36	9.00	INSTALL	0.00	11.00	3.00
90	36TH ST N	142+43.26	35' LT	AHEAD (R3-17a)	30 X 12	2.50	INSTALL	0.00	0.00	0.00
90	36TH ST N	142+60.20	5' RT	ONE WAY (R6-1(R))	36 X 12	3.00	INSTALL	0.00	10.50	0.00
90	36TH ST N	144+20.99	3.6' LT	KEEP RIGHT (R4-7)	24 X 30	5.00	INSTALL	0.00	10.50	0.00
90	36TH ST N	146+23.20	4.8' RT	ONE WAY (R6-1(R))	36 X 12	3.00	INSTALL	0.00	10.50	0.00
91	36TH ST N	146+60.61	4.1' LT	ONE WAY (R6-1(R))	36 X 12	3.00	INSTALL	0.00	10.50	0.00
91	36TH ST N	147+20.27	4.6' LT	ONE WAY (R6-1(R))	36 X 12	3.00	INSTALL	0.00	10.50	0.00
91	36TH ST N	148+05.61	26' RT	SCHOOL (S1-1)	30 X 30	6.25	REMOVE & REPLACE	0.00	11.50	3.00
91	36TH ST N	148+05.61	26' RT	AHEAD (W16-9p)	24 X 12	2.00	REMOVE & REPLACE	0.00	0.00	0.00
91	36TH ST N	148+57.99	3.6' LT	KEEP RIGHT (R4-7)	24 X 30	5.00	INSTALL	0.00	10.50	0.00
91	36TH ST N	149+13.74	27' LT	SPEED LIMIT 40 (R2-1)	24 X 30	5.00	REMOVE & REPLACE	0.00	10.50	3.00
91	36TH ST N	149+27.00	31' LT	BUS STOP*			REMOVE & RESET	0.00	10.00	3.00
91	36TH ST N	149+51.87	1.3' LT	ONE WAY (R6-1(R))	36 X 12	3.00	INSTALL	0.00	10.50	0.00
91	36TH ST N	149+59.53	3.3' RT	KEEP RIGHT (R4-7)	24 X 30	5.00	INSTALL	0.00	10.50	0.00
91	36TH ST N	150+19.26	3.3' RT	KEEP RIGHT (R4-7)	24 X 30	5.00	INSTALL	0.00	10.50	0.00
91	36TH ST N	150+67.44	3.3' RT	KEEP RIGHT (R4-7)	24 X 30	5.00	INSTALL	0.00	10.50	0.00
91	36TH ST N	151+48.70	25' RT	BIKE LANE (R3-17)	30 X 24	5.00	INSTALL	0.00	10.50	0.00
91	36TH ST N	151+48.70	25' RT	ENDS (R3-17bP)	24 X 8	1.33	INSTALL	0.00	0.00	0.00
91	36TH ST N	151+48.70	25' RT	BIKE ROUTE (D11-1)	24 X 18	3.00	INSTALL	0.00	10.50	0.00
91	36TH ST N	151+48.70	25' RT	LEFT ARROW (M6-1)	21 X 15	2.19	INSTALL	0.00	0.00	0.00
91	36TH ST N	151+95.02	27' LT	BIKE LANE (R3-17)	30 X 24	5.00	INSTALL	0.00	10.50	0.00
91	36TH ST N	151+95.02	27' LT	AHEAD (R3-17aP)	24 X 8	1.33	INSTALL	0.00	0.00	0.00
91	36TH ST N	152+16.81	30' RT	SCHOOL (S1-1)	30 X 30	6.25	REMOVE & REPLACE	0.00	11.50	3.00
91	36TH ST N	152+16.81	30' RT	DOWNWARD DIAGONAL ARROW (W6-7p)	24 X 12	2.00	REMOVE & REPLACE	0.00	0.00	0.00
91	36TH ST N	152+29.82	48' LT	SCHOOL (S1-1)	30 X 30	6.25	REMOVE & REPLACE	0.00	11.50	3.00
91	36TH ST N	152+29.82	48' LT	DOWNWARD DIAGONAL ARROW (W6-7p)	24 X 12	2.00	REMOVE & REPLACE	0.00	0.00	0.00
91	36TH ST N	153+15.73	43' RT	SCHOOL (S1-1)	30 X 30	6.25	REMOVE & REPLACE	0.00	11.50	3.00
91	36TH ST N	153+15.73	43' RT	DOWNWARD DIAGONAL ARROW (W6-7p)	24 X 12	2.00	REMOVE & REPLACE	0.00	0.00	0.00
91	36TH ST N	153+35.84	28' LT	SCHOOL (S1-1)	30 X 30	6.25	REMOVE & REPLACE	0.00	11.50	3.00
91	36TH ST N	153+35.84	28' LT	DOWNWARD DIAGONAL ARROW (W6-7p)	24 X 12	2.00	REMOVE & REPLACE	0.00	0.00	0.00
91	36TH ST N	153+98.70	30' RT	BIKE MAY USE FULL LANE (R4-11)	30 X 30	6.25	INSTALL	0.00	10.50	0.00

SUMMARY OF PAVEMENT MARKING

STATION TO STATION			4" WIDE WHITE	4" WIDE WHITE	4" WIDE YELLOW	8" WIDE YELLOW	24" WIDE WHITE	LEFT TURN ARROWS	BIKE LANE WORDS & ARROW	BIKE LANE SYMBOL	BIKE LANE CROSSING (24" WIDE GREEN)
			855(A)	855(A)	855(A)	855(A)	855(A)	855(A)	855(B)	855(B)	855(B)
			L.F.	L.F.	L.F.	L.F.	L.F.	EA	EA	EA	L.F.
100+00.00	TO	112+00.00	2300.0	185.1	1665.4	0.0	254.7	5	4	10	58.7
112+00.00	TO	123+50.00	2300.0	90.0	1698.2	0.0	74.7	2	0	11	44.0
123+50.00	TO	135+00.00	2136.6	255.1	1313.9	0.0	324.8	8	0	11	106.3
135+00.00	TO	146+50.00	2300.0	868.6	1316.4	0.0	265.2	5	0	13	121.0
146+50.00	TO	153+50.00	1129.6	808.3	1134.0	51.4	452.4	5	4	3	0.0
Total			10166.2	2207.1	7127.8	51.4	1371.8	25	8	48	330.0

SEE TRAFFIC SIGNAL PLANS FOR MAST ARM MOUNTED SIGN SUMMARY

* CONTRACTOR IS RESPONSIBLE TO SAFELY STORE THE REMOVED SIGN DURING CONSTRUCTION.

LICENSED PROFESSIONAL ENGINEER
JASON P. DICKMAN
27639
OKLAHOMA
08/13/2020

BEFORE YOU DIG 1-800-522-OKIE 811 CALL OKIE

SUMMARY SHEET 3

PROJECT NO. 144200

ARTERIAL STREET REHABILITATION AND WATERLINE REPLACEMENT – 36TH ST. N. – MLK BLVD TO PEORIA AVE.

CITY OF TULSA, OKLAHOMA
ENGINEERING SERVICES DEPARTMENT

PLANS AND ESTIMATES PREPARED BY: PEC PROFESSIONAL ENGINEERING CONSULTANTS, P.A. 1924 S. UTICA AVE., SUITE 1400 TULSA, OK 74104 918-664-5400 www.pec1.com

REVISION	BY	DATE

DRAWN	BFS	01/2020	APPROVED:
DESIGNED	JPD	01/2020	
SURVEY			
PROJ. MGR.			
LEAD ENGR.		8/20	
FIELD MGR.		8/20	
RECOMMENDED: DESIGN MANAGER		9-20	CITY ENGINEER

FILE: DRAWING: DATE: 10/30/20

ATLAS PAGE NO: 218, 219, 281, 282 SHEET 12 OF 165 SHEETS

DSWG: XXX PLOTTED BY: $USER$ SCALE: $SCALE$ $DATE$ $TIME$ $FILE$

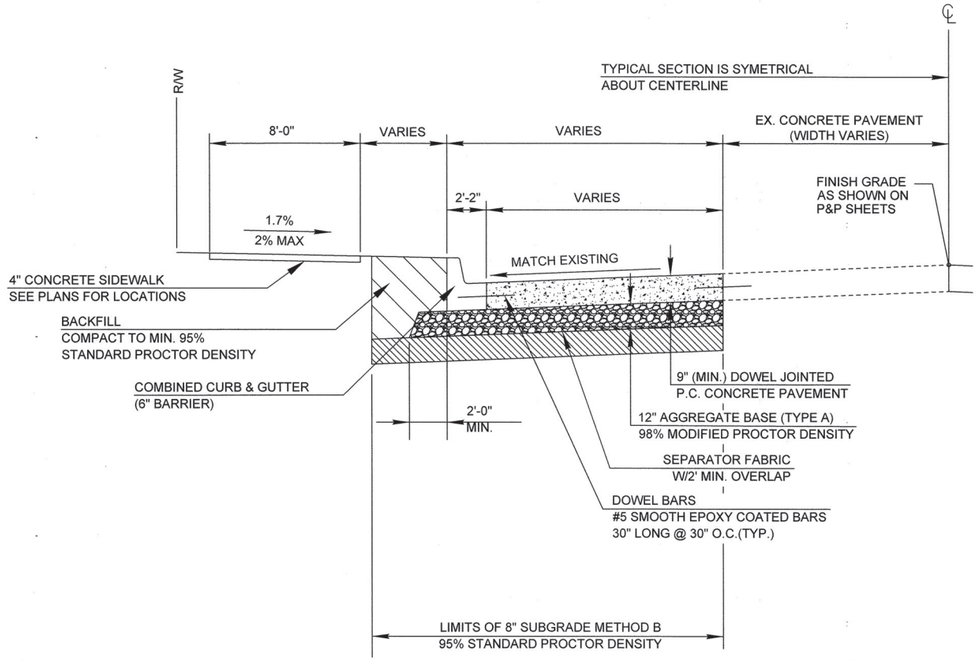

36TH STREET NORTH TYPICAL SECTION
OUTSIDE PANEL REPLACEMENT

SEE PLANS FOR PANEL LOCATIONS
STA. 99+75.83 TO 140+44.36

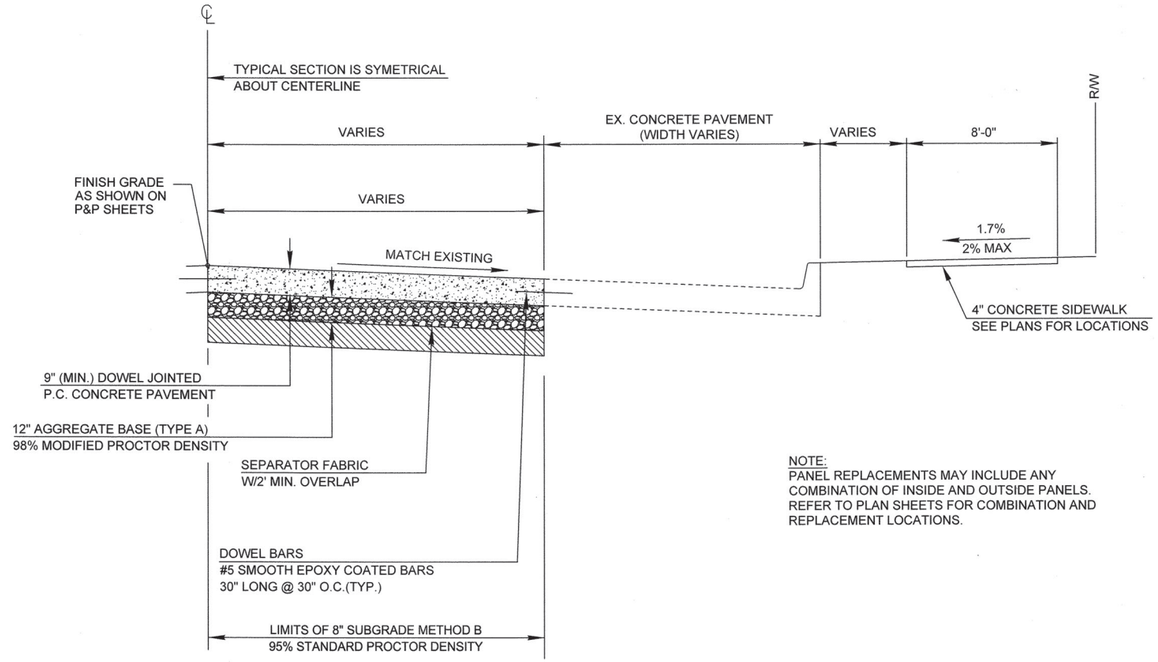

NOTE:
PANEL REPLACEMENTS MAY INCLUDE ANY COMBINATION OF INSIDE AND OUTSIDE PANELS. REFER TO PLAN SHEETS FOR COMBINATION AND REPLACEMENT LOCATIONS.

36TH STREET NORTH TYPICAL SECTION
INSIDE PANEL REPLACEMENT

SEE PLANS FOR PANEL LOCATIONS
STA. 99+75.83 TO 140+44.36

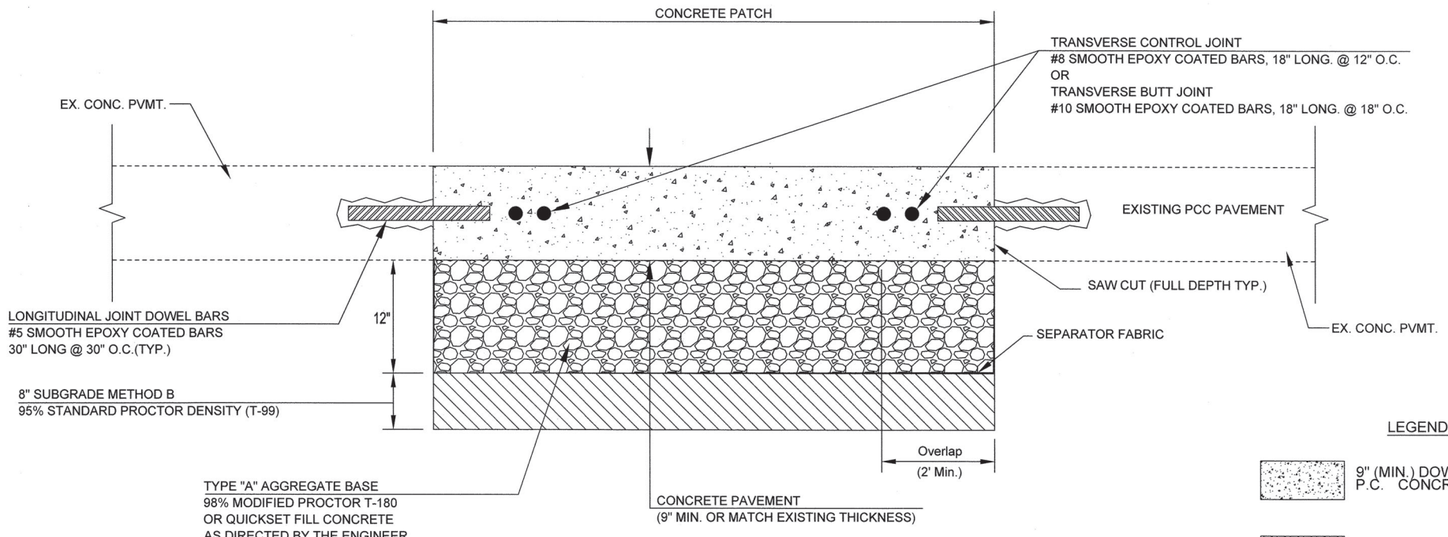

TYPE I PCC PATCH

TRANSVERSE JOINT REPLACEMENTS
SEE PLANS FOR PANEL AND JOINT LOCATIONS
STA. 99+75.83 TO 140+44.36

LEGEND

- 9" (MIN.) DOWEL JOINTED P.C. CONCRETE PAVEMENT
- 12" AGGREGATE BASE
- 8" SUBGRADE METHOD B 95% STANDARD PROCTOR DENSITY

① TOPSOIL NOTE:
THE CONTRACTOR SHALL STRIP ALL OF THE AVAILABLE TOPSOIL, STOCKPILE IT, AND PLACE IT BACK ON THE SECTION IN ACCORDANCE WITH SECTION 205 OF THE ODOT STANDARD SPECIFICATIONS, "SALVAGING TOPSOIL" ADJACENT TO WHERE THE CURB AND/OR INLETS ARE TO BE REPLACED. RESERVED TOPSOIL SHALL BE SPREAD FIRST ON THE COMPLETED SLOPES OF THE CUT SECTIONS AND THE REMAINDER ON COMPLETED FILL SLOPES OR OTHER PRIORITY AREAS LOCATED BY THE ENGINEER. ALL ADDITIONAL COSTS ASSOCIATED WITH OPERATIONS SHALL BE INCLUDED IN THE PAY ITEM FOR "UNCLASSIFIED EXCAVATION".

② SLOPE VARIES, SEE CROSS SECTIONS.

LICENSED PROFESSIONAL ENGINEER
JASON P. DICKMAN
27639
OKLAHOMA
07/19/2020

TYPICAL SECTIONS 1
PROJECT NO. 144200
ARTERIAL STREET REHABILITATION AND WATERLINE REPLACEMENT – 36TH ST. N. – MLK BLVD TO PEORIA AVE.

CITY OF TULSA, OKLAHOMA
ENGINEERING SERVICES DEPARTMENT

PLANS AND ESTIMATES PREPARED BY: PEC — PROFESSIONAL ENGINEERING CONSULTANTS, P.A. 1924 S. UTICA AVE., SUITE 1400 TULSA, OK 74104 918-664-5400 www.pec1.com

REVISION	BY	DATE

DRAWN	BFS	01/2020	APPROVED:
DESIGNED	JPD	01/2020	
SURVEY			
PROJ. MGR.		07/20	
LEAD ENGR.		7/20	
FIELD MGR.		8/20	
RECOMMENDED: DESIGN MANAGER		9-20	CITY ENGINEER

FILE: DRAWING: DATE: 10/30/20

ATLAS PAGE NO: 218, 219, 281, 282 SHEET 13 OF 165 SHEETS

DSNR: XXX PLOTTED BY: #USER# SCALE: #SCALE# #DATE# #TIME#
#FILE#

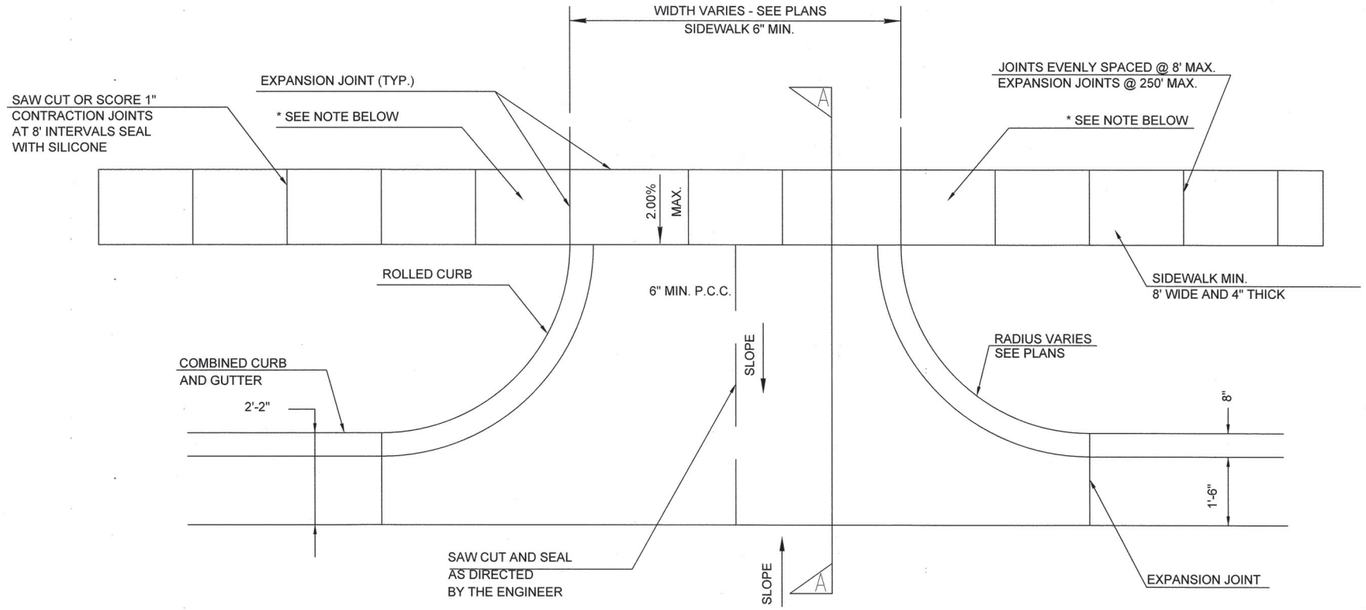

* - FIRST PANEL ON EITHER SIDE OF DRIVEWAY IS TO HAVE A MINIMUM THICKNESS OF 6".

DRIVEWAY DETAIL

NOTE:
FOR DRIVES GREATER THAN 12' WIDE, PLACE A SAW CUT JOINT AT THE CENTER OF THE DRIVE, OR AS DIRECTED BY THE ENGINEER.

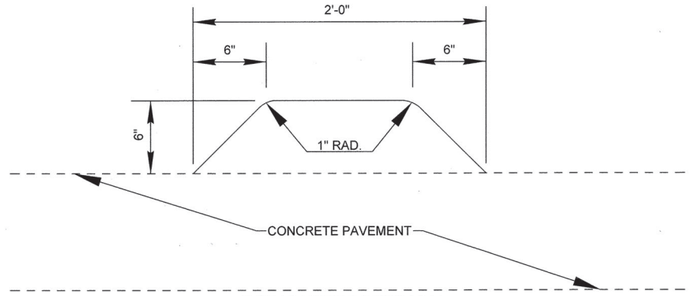

CONCRETE MEDIAN MOUNTABLE CURB

(PAID FOR AS CLASS A CONCRETE)
(POUR INTEGRAL TO CONCRETE PAVEMENT)

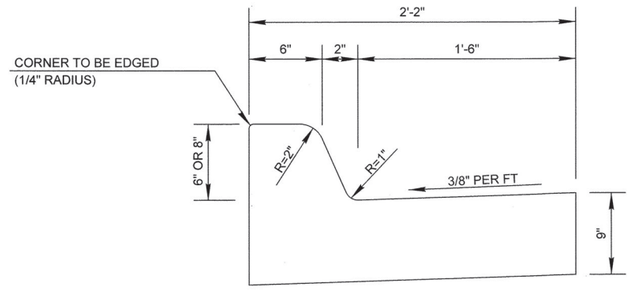

COMBINED CURB & GUTTER (6" & 8" BARRIER)

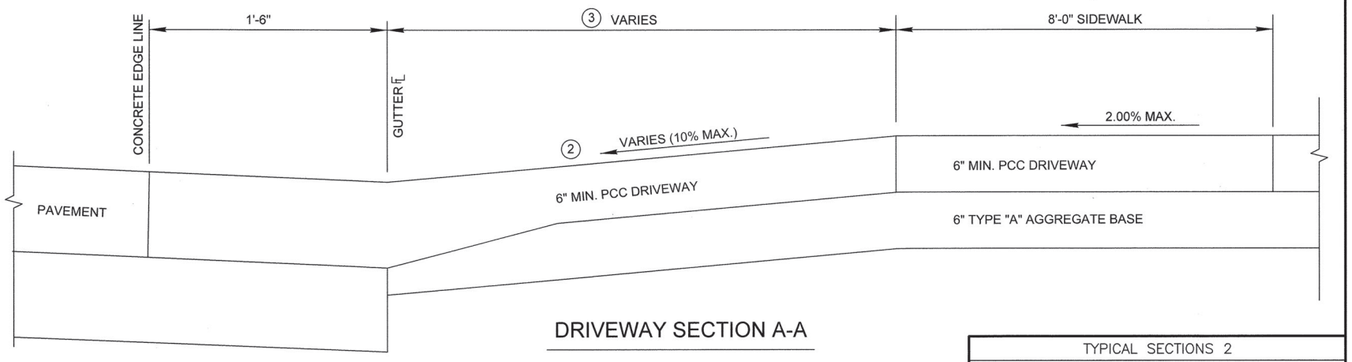

DRIVEWAY SECTION A-A

① TOPSOIL NOTE:
THE CONTRACTOR SHALL STRIP ALL OF THE AVAILABLE TOPSOIL, STOCKPILE IT, AND PLACE IT BACK ON THE SECTION IN ACCORDANCE WITH SECTION 205 OF THE ODOT STANDARD SPECIFICATIONS, "SALVAGING TOPSOIL" ADJACENT TO WHERE THE CURB AND/OR INLETS ARE TO BE REPLACED. RESERVED TOPSOIL SHALL BE SPREAD FIRST ON THE COMPLETED SLOPES OF THE CUT SECTIONS AND THE REMAINDER ON COMPLETED FILL SLOPES OR OTHER PRIORITY AREAS LOCATED BY THE ENGINEER. ALL ADDITIONAL COSTS ASSOCIATED WITH OPERATIONS SHALL BE INCLUDED IN THE PAY ITEM FOR "UNCLASSIFIED EXCAVATION".

② SLOPE VARIES, SEE CROSS SECTIONS.

③ VARIES, SEE CROSS SECTIONS.

LICENSED PROFESSIONAL ENGINEER
JASON P. DICKMAN
27639
OKLAHOMA
07/19/2020

REVISION	BY	DATE

TYPICAL SECTIONS 2

PROJECT NO. 144200

ARTERIAL STREET REHABILITATION AND WATERLINE REPLACEMENT – 36TH ST. N. – MLK BLVD TO PEORIA AVE.

CITY OF TULSA, OKLAHOMA
ENGINEERING SERVICES DEPARTMENT

PLANS AND ESTIMATES PREPARED BY: PEC PROFESSIONAL ENGINEERING CONSULTANTS, P.A. 1924 S. UTICA AVE., SUITE 1400 TULSA, OK 74104 918-664-5400 www.pec1.com

DRAWN	BFS	01/2020	APPROVED:
DESIGNED	JPD	01/2020	
SURVEY			
PROJ. MGR.		07/20	
LEAD ENGR.		7/20	
FIELD MGR.		8/20	
RECOMMENDED: DESIGN MANAGER	HRS 9.20		CITY ENGINEER

FILE: DRAWING: DATE: 10/20/20

ATLAS PAGE NO: 218, 219, 281, 282 SHEET 14 OF 165 SHEETS

DSNR: XXX PLOTTED BY: $USER$ SCALE: $SCALE$ $DATE$ $TIME$ $FILE$

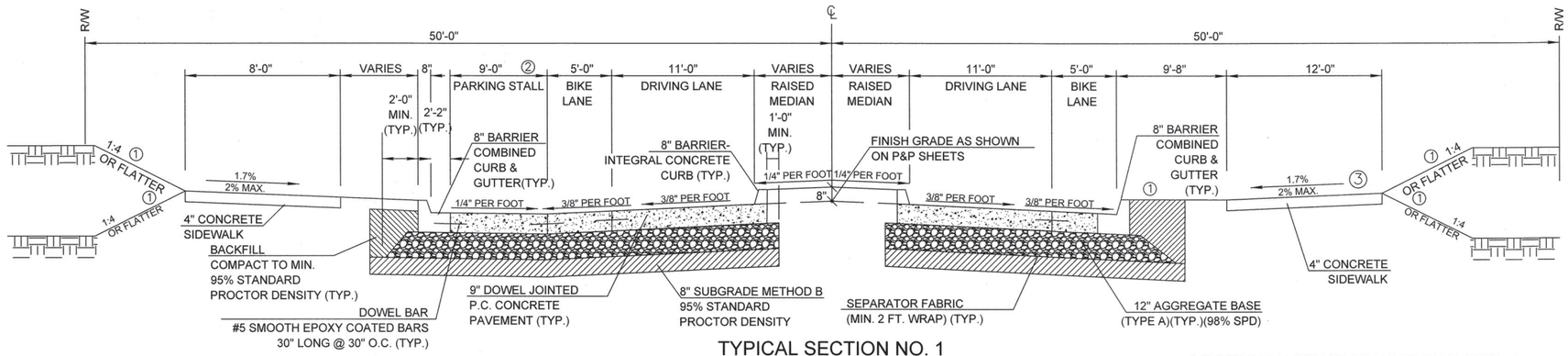

SECTION WITH PARKING STALL

SECTIONS WITH PARKING STALL INCLUDE:
STA. 141+95.33 TO 143+53.00
STA. 144+38.30 TO 145+95.63
STA. 146+89.33 TO 147+81.66
STA. 148+61.06 TO 149+09.39
STA. 149+09.39 TO 151+46.05
(BUS DROP-OFF LANE) (LANE WIDTH VARIES)

TYPICAL SECTION NO. 1

STA. 140+55.60 TO STA. 140+82.91
STA. 140+93.64 TO STA. 141+20.91
STA. 141+65.00 TO STA. 143+77.00
STA. 144+17.08 TO STA. 147+98.00
STA. 148+54.05 TO STA. 149+89.27
STA. 150+15.36 TO STA. 152+12.56

SECTION WITHOUT PARKING STALL

SECTIONS WITH PARKING STALL INCLUDE:
STA. 141+77.33 TO 141+77.33
STA. 143+05.33 TO 143+75.66
STA. 143+95.83 TO 145+32.16
STA. 145+41.83 TO 145+90.16
STA. 147+50.33 TO 147+98.66
STA. 148+52.71 TO 149+23.04

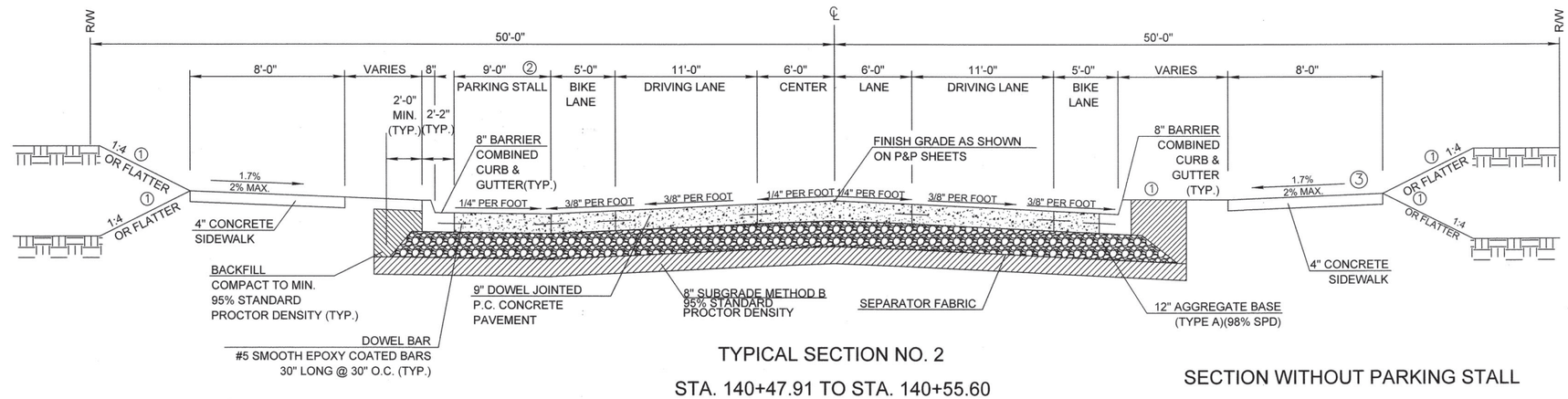

SECTION WITH PARKING STALL

TYPICAL SECTION NO. 2

STA. 140+47.91 TO STA. 140+55.60
STA. 140+82.91 TO STA. 140+93.64
STA. 141+20.91 TO STA. 141+65.00
STA. 143+77.00 TO STA. 144+17.08
STA. 147+98.00 TO STA. 148+54.05
STA. 149+89.27 TO STA. 150+15.36
STA. 152+12.56 TO STA. 152+70.43

SECTION WITHOUT PARKING STALL

SEE JOINT LAYOUT SHEET FOR JOINT SPACING

① SLOPE VARIES, SEE CROSS SECTIONS.

② WIDTH AND SIDE VARIES, SEE GEOMETRIC LAYOUT SHEETS.

③ SLOPE WATER AWAY FROM CENTERLINE OF STREET, SEE GEOMETRIC LAYOUT SHEETS & CROSS SECTIONS.

LICENSED PROFESSIONAL ENGINEER
JASON P. DICKMAN
27639
OKLAHOMA
07/19/2020

REVISION	BY	DATE

TYPICAL SECTIONS 3

PROJECT NO. 144200

ARTERIAL STREET REHABILITATION AND WATERLINE REPLACEMENT – 36TH ST. N. – MLK BLVD TO PEORIA AVE.

CITY OF TULSA, OKLAHOMA
ENGINEERING SERVICES DEPARTMENT

PLANS AND ESTIMATES PREPARED BY: PEC
PROFESSIONAL ENGINEERING CONSULTANTS, P.A.
1924 S. UTICA AVE., SUITE 1400
TULSA, OK 74104 918-664-5400 www.pec1.com

DRAWN	BFS	01/2020	APPROVED:
DESIGNED	JPD	01/2020	
SURVEY			
PROJ. MGR.			
LEAD ENGR.			
FIELD MGR.			
RECOMMENDED: DESIGN MANAGER			CITY ENGINEER

FILE: DRAWING: DATE: 10/20/20

ATLAS PAGE NO: 218, 219, 281, 282 SHEET 15 OF 165 SHEETS

$TIME$ $DATE$ $SCALE$ $USER$ SCALE: PLOTTED BY: DSNR: XXX $FILE$

N. M.L.K. BLVD.

100+00

SW CORNER SECTION 13
STA. 99+75.83
N-445,097.6327
E-2,560,423.2306

THOMAS, CHARLES D. TRUST
GENERAL WARRANTY DEED
BOOK 3958 PAGE 819

TULSA COUNTY

SKYLINE HEIGHTS ADDITION BLOCK 1

24

25

LLEWELLYN R. WILLIS AND JACQUELINE WILLIS
QUITCLAIM DEED
DOC# 2005007924

RIGHT-OF-WAY AGREEMENT
OKLAHOMA NATURAL GAS
BOOK 4174 PAGES 1053

N. DETROIT AVE.

105+00

SKYLINE HEIGHTS ADDITION BLOCK 2

11 — FELICIA LAVONN MIMS DECREE OF DISTRIBUTION DOC# 2013039545

12 — MARSHA LYNN WILSON AND KAREN WILSON VICE GENERAL WARRANTY DEED BOOK 5319 PAGE 0430

13 — NOLAN BONNER AND AUGUSTA BONNER WARRANTY DEED BOOK 3820 PAGE 1909

14 — RUIZ, CINDY & JEREMY GENERAL WARRANTY DEED DOC#2019022807

15 — ADAMS, CHRISTOPHER GENERAL WARRANTY DEED DOC#2020026223

16 — ELIZABETH LEWIS GENERAL WARRANTY DEED BOOK 5482 PAGE 2391

17 — EDMOND R. SMITH, SR., EDMOND R. SMITH, JR., DEVAYNE ALLEN SMITH, JACQUELYN ELAINE SMITH & BEVILEE ALICIA SMITH GENERAL WARRANTY DEED BOOK 4548 PAGE 1764

18 — PHOENIX AVENUE LAND TRUST GENERAL WARRANTY DEED DOC# 2017124AF

19 — 341 E. 36 ST. N. TRUST TRUSTEE'S DEED DOC#2016076812

110+00

E. 36TH STREET N.

16.5' STATUTORY R/W

COUNTY BUSINESS DEDICATION DEED
BOOK 4064 PAGES 3-4

ALFRESCO GROUP LLC
GENERAL WARRANTY DEED
DOC#2019075940

GEOMETRY SHOWN FROM TAX ASSESSOR'S MAP NO RECORDED INSTRUMENT PROVIDED TO DETERMINE OWNERSHIP

CARL'S COMMERCIAL CENTER 4

MATCH LINE STA. 110+65.00

MATCH LINE STA. 110+65.00

N. ELGIN AVE.

115+00

SKYLINE HEIGHTS ADDITION BLOCK 1

2

1

INGRESS/EGRESS EASEMENT
BOOK 4176 PAGE 1001

NEIGHBOR FOR NEIGHBOR, INC.
GENERAL WARRANTY DEED
BOOK 6981 PAGES 1208-1210

SHIRLEY A. CRUTISON AND BRENDA K. CRUTISON
QUITCLAIM DEED
DOC#2004091474

NORTHLAND CENTER BLOCK 1

120+00

NEIGHBOR FOR NEIGHBOR, INC.
GENERAL WARRANTY DEED
BOOK 6981 PAGES 1211-1213

NON-EXCLUSIVE ACCESS EASEMENT
DOC# 2011025070

15' SANITARY SEWER EASEMENT

MYRTIS KIRK
STATUTORY SPECIAL WARRANTY DEED
DOC# 2008128945

UNDERGROUND RIGHT-OF-WAY EASEMENT
DOC# 2007098700

ALFRESCO GROUP LLC
CORRECTED QUITCLAIM DEED
DOC# 2018041263

TAHIR A. KAHN
WARRANTY DEED
DOC# 2015042960

UNDERGROUND RIGHT-OF-WAY EASEMENT
DOC# 2008052871

CARLIS BELL AND ELZADIE R. WILLIAMS
GENERAL WARRANTY DEED
BOOK 4639 PAGE 2233

MAXWELL ASARE
GENERAL WARRANTY DEED
DOC# 2010052548

CARL'S GREEN VALLEY ADDITION BLOCK 1

2

CARL'S COMMERCIAL CENTER

3 — 2 — 1

MATCH LINE STA. 122+70.00

SURVEYORS CERTIFICATE

I, James E. Harden of Tulsa County, State of Oklahoma, and a Professional Surveyor, do hereby certify that the above shown survey is true and correct to the best of my knowledge.

WITNESS MY HAND AND SEAL THIS 17th DAY OF JULY, 2020.

JAMES E. HARDEN, P.L.S. #1233

REGISTERED PROFESSIONAL LAND SURVEYOR
JAMES EDWARD HARDEN
L.S. 1233
STATE OF OKLAHOMA

REVISION	BY	DATE

RIGHT-OF-WAY 1

PROJECT NO. 144200

ARTERIAL STREET REHABILITATION AND WATERLINE REPLACEMENT - 36TH ST. N. - MLK BLVD TO PEORIA AVE.

CITY OF TULSA, OKLAHOMA
ENGINEERING SERVICES DEPARTMENT

PLANS AND ESTIMATES PREPARED BY: PEC PROFESSIONAL ENGINEERING CONSULTANTS, P.A. 1924 S. UTICA AVE., SUITE 1400 TULSA, OK 74104 918-664-5400 www.pec1.com

PLAN SCALE: 1" = 40'	DRAWN	BFS	01/2020	APPROVED:
	DESIGNED	JPD	01/2020	
	SURVEY			
PROFILE SCALE:	PROJ. MGR.	BRK	07/20	
HORIZONTAL: 1" =	LEAD ENGR.	JPD	7/20	
	FIELD MGR.	JEH	8/20	
VERTICAL 1" =	RECOMMENDED DESIGN MANAGER	MAS	9-20	CITY ENGINEER

FILE: DRAWING: DATE: 10/20/20

ATLAS PAGE NO: 218, 219, 281, 282 SHEET 16 OF 165 SHEETS

DSNR: XXX PLOTTED BY: $USER$ SCALE: $SCALE$ $DATE$ $TIME$

MATCH LINE STA. 122+70.00

MATCH LINE STA. 133+10.00

MATCH LINE STA. 133+10.00

MATCH LINE STA. 140+70.00

N. GARRISON AVE.

N. HARTFORD AVE.

N. HARTFORD AVE.

N. KENOSHA AVE.

N. LANSING AVE.

N. LANSING PL.

N. LANSING PL.

OSAGE PRAIRIE TRAIL

OSAGE PRAIRIE TRAIL

E. 36TH STREET N.

E. 36TH STREET N.

125+00

130+00

135+00

140+00

BOARD OF REGENTS OF THE UNIVERSITY OF OKLAHOMA SPECIAL WARRANTY DEED DOC# 2009069103

BOARD OF REGENTS OF THE UNIVERSITY OF OKLAHOMA SPECIAL WARRANTY DEED DOC# 2009069103

NORTHLAND CENTER BLOCK 2

FAITH CHRISTIAN FELLOWSHIP NORTH, INC. QUITCLAIM DEED BOOK 5743 PAGE 614

15' SANITARY SEWER EASEMENT

FAITH CHRISTIAN FELLOWSHIP NORTH, INC. QUITCLAIM DEED BOOK 5743 PAGE 614

FAITH CHRISTIAN FELLOWSHIP NORTH, INC. QUITCLAIM DEED BOOK 5743 PAGE 614

FAITH CHRISTIAN FELLOWSHIP NORTH, INC. QUITCLAIM DEED BOOK 5743 PAGE 614

16.5' STATUTORY R/W

1393 Sufa Corner-Section-big N=445159.161 E=2563069.796 El=640.69 Brass Cap Found

S 1/4 CORNER SECTION 13
STA. 126+23.11
N-445,159.1608
E-2,563,069.7963

JONES, ETONNO SR. QUIT CLAIM DEED DOC#2019046226

36

NAEEM, MOHAMMAD GENERAL WARRANTY DEED DOC#20200036291

1

35

CHANDLER-FRATES SECOND ADDITION BLOCK 6

CHANDLER-FRATES SECOND ADDITION 2 AMENDED PLAT BLOCK 6, LOT 1-6

AMERITOPS LLC WARRANTY DEED DOC#2017036773

CHAPEL HILL ADDITION BLOCK 1

1

LIGHT OF THE WORLD INTERDENOMINATIONAL DELIVERANCE CHURCH GENERAL WARRANTY DEED BOOK 5797 PAGE 1252

ADETULA TRUST GENERAL WARRANTY DEED DOC#2016053875

WHITE'S KNOLL BLOCK 1

1

2

COLBERT-GRANT'S INVESTMENTS LLC GENERAL WARRANTY DEED DOC#2018039753

COLBERT-GRANT'S INVESTMENTS LLC GENERAL WARRANTY DEED DOC#2018039753

BROWN, LESLIE JR QUIT CLAIM DEED DOC#2019101067

10

11

RIGHT-OF-WAY EASEMENT PUBLIC SERVICE COMPANY DOC# 2014067696

REVERSE PARKING AGREEMENT BOOK 3766 PAGES 647-650

41

42

THE BOWLER FAMIL ST QUITCLAIM DEED MEMORANDUM OF TRUST DOC# 2014116142

GREATER UNION BAPTIST CHURCH GENERAL WARRANTY DEED BOOK 4079 PAGE 1708

TULSA COUNTY PER TULSA COUNTY LAND RECORDS NO RECORDED INSTRUMENT PROVIDED

CROSSOVER COMMUNITY IMPACT, INC. QUITCLAIM DEED DOC# 2014109172

REVERSE PARKING AGREEMENT BOOK 3777 PAGES 326-329

SIDEWALK EASM'T BK 6780 PG 172-173

STARKS, TONNIEKA WARRANTY DEED DOC#2020018551

1

CHANDLER-FRATES SECOND ADDITION BLOCK 2

DEED OF DEDICATION BOOK 2573 PAGE 415

MARCUS OFFORD GENERAL WARRANTY DEED BOOK 4004 PAGE 1493 BOOK 4004 PAGE 1502

1

2

CHANDLER-FRATES SECOND ADDITION BLOCK 1

FRAZIER, ROBERT LEE JR GUARDIAN'S DEED DOC#2019065174

1

CHANDLER-FRATES SECOND ADDITION BLOCK 3

NORTHSIDE CLINIC BLOCK 1

1

0 20' 40' 80'

SURVEYORS CERTIFICATE

I, James E. Harden of Tulsa County, State of Oklahoma, and a Professional Surveyor, do hereby certify that the above shown survey is true and correct to the best of my knowledge.

WITNESS MY HAND AND SEAL THIS 17th DAY OF JULY, 2020.

JAMES E. HARDEN, P.L.S. #1233

REGISTERED PROFESSIONAL LAND SURVEYOR
JAMES EDWARD HARDEN
L.S. 1233
STATE OF OKLAHOMA

RIGHT-OF-WAY 2

PROJECT NO. 144200

ARTERIAL STREET REHABILITATION AND WATERLINE REPLACEMENT - 36TH ST. N. - MLK BLVD TO PEORIA AVE.

CITY OF TULSA, OKLAHOMA
ENGINEERING SERVICES DEPARTMENT

PLANS AND ESTIMATES PREPARED BY: PEC PROFESSIONAL ENGINEERING CONSULTANTS, P.A. 1924 S. UTICA AVE., SUITE 1400 TULSA, OK 74104 918-664-5400 www.pec1.com

REVISION	BY	DATE

PLAN SCALE: 1" = 40'

DRAWN	BFS	01/2020	APPROVED:
DESIGNED	JPD	01/2020	
SURVEY			
PROJ. MGR.		07/20	
LEAD ENGR.		7/20	
FIELD MGR.		8/20	
RECOMMENDED		9.20	
DESIGN MANAGER			CITY ENGINEER

PROFILE SCALE:

HORIZONTAL: 1" =

VERTICAL 1" =

FILE: DRAWING: DATE: 10/30/20

ATLAS PAGE NO: 218, 219, 281, 282 SHEET 17 OF 165 SHEETS

DSNR: XXX PLOTTED BY: $USER$ SCALE: $SCALE$ DATE$ TIME$ SHEET$

MATCH LINE STA. 140+70.00

145+00

150+00

2

MARKET ADDITION BLOCK 1

1

COMANCHE CHRISTIAN CENTER, INC. A/K/A LEWIS BUMPERS, JR. MINISTRIES GENERAL WARRANTY DEED BOOK 6895 PAGES 1037–1039

COMANCHE PARK BLOCK 1

1

7.5' U/E

7.5' U/E

50' B/L

CARNES, AND COWEN CONST CO. PER TULSA COUNTY LAND RECORDS NO RECORDED INSTRUMENT PROVIDED

PRES. R/W

GREATER UNION BAPTIST CHURCH GENERAL WARRANTY DEED BOOK 4891 PAGE 2498

ROADWAY GRANT BOOK 2856 PAGE 13

WORLD WON FOR CHRIST OUTREACH MINISTRIES, INC. GENERAL WARRANTY DEED BOOK 6421 PAGES 1435–1436

SIGN EASEMENT BOOK 6895 PAGE 1038

CHAUDHARY, NASIR & ZAHIR & MUHAMMAD A JAVED CORRECTED GENERAL WARRANTY DEED DOC#2019012156

N. PEORIA AVE.

SE CORNER SECTION 13
STA. 152+70.43
N=445,220.7007
E=2,565,716.3982

E. 36TH STREET N.

16.5' STATUTORY R/W

30'

50'

25'

RIGHT OF WAY EASEMENT BOOK 1428, PAGE 69

CROSSOVER COMMUNITY IMPACT, INC. QUITCLAIM DEED DOC# 2014109172

APPROXIMATE LOCATION OF ACCESS/UTILITY EASEMENT DOC# 2005143620

BOBBY J. PURIFY AFFADAVIT OF SURVIVING JOINT TENANT BOOK 6490 PAGES 1129–1131

CROSSOVER COMMUNITY IMPACT, INC. QUITCLAIM DEED DOC# 2014109172

CROSSOVER COMMUNITY IMPACT, INC. QUITCLAIM DEED DOC# 2015012712

35' B/L

IRIS GARDENS ADDITION BLOCK 1

2

3' U/E

CITY OF TULSA WARRANTY DEED BOOK 4680 PAGE 1566

EASEMENT FOR EQUIPMENT STATION BOOK 6502 PAGE 0110

RASHID, MUHAMMAD SPECIAL WARRANTY DEED DOC#2019019593

50' EASEMENT BOOK 1397, PAGE 426

NP36 LLC SPECIAL WARRANTY DEED DOC#2017012833

UNPLATTED

50'

SURVEYORS CERTIFICATE

I, James E. Harden of Tulsa County, State of Oklahoma, and a Professional Surveyor, do hereby certify that the above shown survey is true and correct to the best of my knowledge.

WITNESS MY HAND AND SEAL THIS 17th DAY OF JULY, 2020.

JAMES E. HARDEN, P.L.S. #1233

REGISTERED PROFESSIONAL LAND SURVEYOR — JAMES EDWARD HARDEN L.S. 1233 — STATE OF OKLAHOMA

REVISION	BY	DATE

RIGHT–OF–WAY 3

PROJECT NO. 144200

ARTERIAL STREET REHABILITATION AND WATERLINE REPLACEMENT – 36TH ST. N. – MLK BLVD TO PEORIA AVE.

CITY OF TULSA, OKLAHOMA
ENGINEERING SERVICES DEPARTMENT

PLANS AND ESTIMATES PREPARED BY: PEC — PROFESSIONAL ENGINEERING CONSULTANTS, P.A. 1924 S. UTICA AVE., SUITE 1400 TULSA, OK 74104 918-664-5400 www.pec1.com

PLAN SCALE: 1" = 40'	DRAWN	BFS	01/2020	APPROVED:
	DESIGNED	JPD	01/2020	
	SURVEY			
PROFILE SCALE:	PROJ. MGR.		07/20	
HORIZONTAL: 1" =	LEAD ENGR.		7/20	
	FIELD MGR.		8/20	
VERTICAL 1" =	RECOMMENDED: DESIGN MANAGER		9.20	CITY ENGINEER
FILE:	DRAWING:			DATE: 10/30/20
ATLAS PAGE NO: 218, 219, 281, 282				SHEET 18 OF 165 SHEETS

DSNR: XXX PLOTTED BY: $USER$ SCALE: $SCALE$ $DATE$ $TIME$

N. M.L.K. BLVD.

100+00

SW CORNER SECTION 13
STA. 99+75.83
N-445,097.6327
E-2,560,423.2306

CHAS D. THOMAS TRUST

R/W PRES. R/W

SKYLINE HEIGHTS ADDITION BLOCK 1

Address #3610 — 24

Address #3604 — 25 — 3 — LLEWELLYN R. WILLIS AND JACQUELINE WILLIS

5' U/E — 10' U/E — 25' B/L

PRES. R/W

RIGHT-OF-WAY AGREEMENT OKLAHOMA NATURAL GAS BOOK 4174 PAGES 1053

N. DETROIT AVE.

105+00

SKYLINE HEIGHTS ADDITION BLOCK 2

Address #3609	Address #309	Address #313	Address #317	Address #323	Address #327	Address #333	Address #337	Address #341
11	12	13	14	15	16	17	18	19
4	5	6	7	8	9	10	11	12
FELICIA LAVONN MIMS	MARSHA LYNN WILSON AND KAREN WILSON VICE	NOLAN BONNER AND AUGUSTA BONNER	CINDY AND JEREMY RUIZ	MYRTHA D. WASHINGTON C/O JERROD SHAHID KHAN	ELIZABETH LEWIS PRES. R/W	EDMOND R. SMITH, SR, EDMOND R. SMITH, JR, AND DEWAYNE ALLEN SMITH, ETAL	PHOENIX AVENUE LAND TRUST	341 E. 36TH ST. N. TRUST

15' B/L — 5' U/E — 25' B/L — R/W

100+00

110+00

E. 36TH STREET N.

16.5' STATUTORY R/W

50' — 80' — 75'

COUNTY BUSINESS DEDICATION DEED BOOK 4064 PAGES 3-4

GEOMETRY SHOWN FROM TAX ASSESSOR'S MAP NO RECORDED INSTRUMENT PROVIDED TO DETERMINE OWNERSHIP

ALFRESCO GROUP, LLC

CARL'S COMMERCIAL CENTER 4 — 2

MATCH LINE STA. 110+65.00

0 20' 40' 80'

MATCH LINE STA. 110+65.00

N. ELGIN AVE.

20 — Address #345 — 14 — SHIRLEY A. CRUTISON AND BRENDA K. CRUTISON

15' B/L

SKYLINE HEIGHTS ADDITION BLOCK 1 — 2

NEIGHBOR FOR NEIGHBOR, INC. — 16 — 1

25' B/L & U/E — 15' B/L

Address #505

PRES. R/W

INGRESS/EGRESS EASEMENT BOOK 4176 PAGE 1001

Address #505

NEIGHBOR FOR NEIGHBOR, INC.

115+00

18

NORTHLAND CENTER BLOCK 1

45' B/L

120+00

Address #505

NEIGHBOR FOR NEIGHBOR, INC.

NON-EXCLUSIVE ACCESS EASEMENT DOC# 2011025070

15' SANITARY SEWER EASEMENT

R/W — PRES. R/W

80' — 50'

16.5' STATUTORY R/W

E. 36TH STREET N.

MYRTIS KIRK

MAXWELL ASARE

ALFRESCO GROUP, LLC — 22

+03.86 50' RT.

+08.22 50' RT.

+81.27 50' RT.

+61.30 40' RT.

+61.27 50' RT.

+51.38 RT.

UNDERGROUND RIGHT-OF-WAY EASEMENT DOC# 2007098700

PROP. R/W

UNDERGROUND RIGHT-OF-WAY EASEMENT DOC# 2008052871

TAHIR A. KAHN — 23 — Address #558

Proposed R/W 23A — 2470.00 S.F.

CARLIS BELL AND ELZADIE R. WILLIAMS — 24 — Address #3388

15' B/L — 25' B/L — 10' U/E

MAXWELL ASARE — 19 — Address #502 — 25' B/L

CARL'S GREEN VALLEY ADDITION BLOCK 1 — 2

10' U/E

20 — Address #502

Proposed R/W 20A — 3496.03 S.F.

21 — Address #520

Proposed R/W 21A — 2447.14 S.F.

Proposed R/W 22A — 12730.00 S.F.

ALFRESCO GROUP, LLC — 13

ALFRESCO GROUP, LLC — 15 — 2

ALFRESCO GROUP, LLC — 17 — 1

CARL'S COMMERCIAL CENTER

MATCH LINE STA. 122+70.00

SURVEYORS CERTIFICATE

I, James E. Harden of Tulsa County, State of Oklahoma, and a Professional Surveyor, do hereby certify that the above shown survey is true and correct to the best of my knowledge.

WITNESS MY HAND AND SEAL THIS 17th DAY OF JULY, 2020.

JAMES E. HARDEN, P.L.S. #1233

REGISTERED PROFESSIONAL LAND SURVEYOR — JAMES EDWARD HARDEN L.S. 1233 — STATE OF OKLAHOMA

REVISION	BY	DATE

PROPOSED RIGHT-OF-WAY 1

PROJECT NO. 144200

ARTERIAL STREET REHABILITATION AND WATERLINE REPLACEMENT - 36TH ST. N. - MLK BLVD TO PEORIA AVE.

CITY OF TULSA, OKLAHOMA
ENGINEERING SERVICES DEPARTMENT

PLANS AND ESTIMATES PREPARED BY: PEC — PROFESSIONAL ENGINEERING CONSULTANTS, P.A. 1924 S. UTICA AVE., SUITE 1400 TULSA, OK 74104 918-664-5400 www.pect.com

PLAN SCALE: 1" = 40'	DRAWN	BFS	01/2020	APPROVED:
	DESIGNED	JPD	01/2020	
	SURVEY			
PROFILE SCALE:	PROJ. MGR.		07/20	
HORIZONTAL: 1" =	LEAD ENGR.		7/20	
	FIELD MGR.		7/20	
VERTICAL 1" =	RECOMMENDED: DESIGN MANAGER		9-20	CITY ENGINEER
FILE:	DRAWING:			DATE: 10/30/20
ATLAS PAGE NO: 218, 219, 281, 282				SHEET 19 OF 165 SHEETS

DSNR: XXX PLOTTED BY: $USER$ SCALE: $SCALE$ DATE: $DATE$ TIME: $TIME$

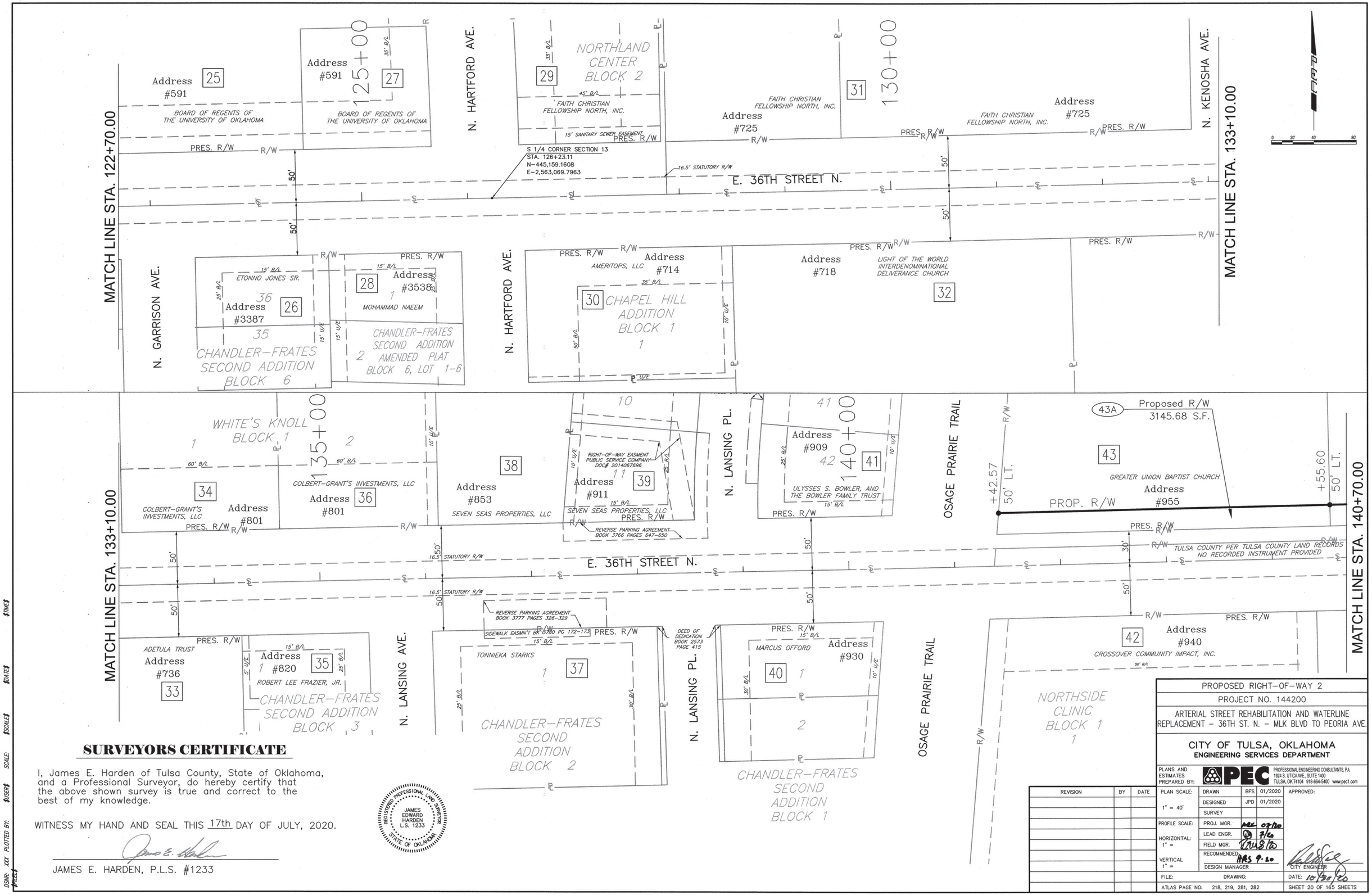

SURVEYORS CERTIFICATE

I, James E. Harden of Tulsa County, State of Oklahoma, and a Professional Surveyor, do hereby certify that the above shown survey is true and correct to the best of my knowledge.

WITNESS MY HAND AND SEAL THIS 17th DAY OF JULY, 2020.

JAMES E. HARDEN, P.L.S. #1233

REGISTERED PROFESSIONAL LAND SURVEYOR JAMES EDWARD HARDEN L.S. 1233 STATE OF OKLAHOMA

PROPOSED RIGHT-OF-WAY 2

PROJECT NO. 144200

ARTERIAL STREET REHABILITATION AND WATERLINE REPLACEMENT – 36TH ST. N. – MLK BLVD TO PEORIA AVE.

CITY OF TULSA, OKLAHOMA
ENGINEERING SERVICES DEPARTMENT

PLANS AND ESTIMATES PREPARED BY: PEC PROFESSIONAL ENGINEERING CONSULTANTS, P.A. 1924 S. UTICA AVE., SUITE 1400 TULSA, OK 74104 918-664-5400 www.pec1.com

REVISION	BY	DATE

PLAN SCALE: 1" = 40'	DRAWN	BFS	01/2020
	DESIGNED	JPD	01/2020
	SURVEY		
PROFILE SCALE:	PROJ. MGR.	ARK	07/20
HORIZONTAL: 1" =	LEAD ENGR.		7/20
	FIELD MGR.		8/20
VERTICAL 1" =	RECOMMENDED: DESIGN MANAGER	HRS	9-20

APPROVED: CITY ENGINEER

FILE: DRAWING:

DATE: 10/30/20

ATLAS PAGE NO: 218, 219, 281, 282

SHEET 20 OF 165 SHEETS

DSNR: XXX PLOTTED BY: $USER$ SCALE: $SCALE$ $DATE$ $TIME$

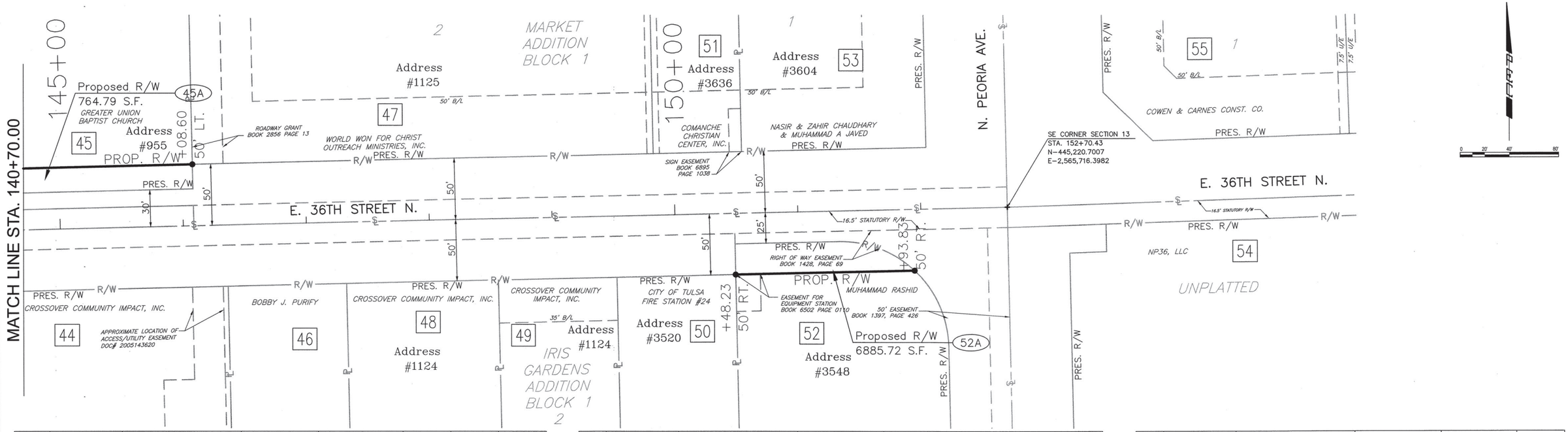

No.	Parcel #	Owner, Address	Address	Plat	Permanent Drainage Easement	Temporary Construction Easement	Right-of-Entry Permit
1	90213-02-13-36630	CHARLES D. THOMAS TRUST	P O BOX 52385	UNPLATTED			X
2	06750-02-24-00600	ALFRESCO GROUP, LLC	2118 S. ATLANTA PL. STE. 100	PART OF LOT 4, CARL'S COMMERCIAL CENTER			X
3	38450-02-13-04290	WILLIS, LLEWELLYN R. AND JACQUELINE	3604 N. DETROIT AVE.	LOT 25, BLK 1, SKYLINE HEIGHTS ADDITION			X
4	38450-02-13-04400	MIMS, FELICIA LAVONN	3609 N. DETROIT AVE.	LOT 11, BLK 2, SKYLINE HEIGHTS ADDITION			X
5	38450-02-13-04410	WILSON, MARSHA LYNN AND KAREN WILSON VICE	309 E. 36TH ST. N.	LOT 12, BLK 2, SKYLINE HEIGHTS ADDITION			X
6	38450-02-13-04420	BONNER, NOLAN AND AUGUSTA	313 E. 36TH ST. N.	LOT 13, BLK 2, SKYLINE HEIGHTS ADDITION			X
7	38450-02-13-04430	RUIZ, CINDY & JEREMY	317 E. 36TH ST. N.	LOT 14, BLK 2, SKYLINE HEIGHTS ADDITION			X
8	38450-02-13-04440	MYRTHA D. WASHINGTON C/O KHAN, JERROD SHAHID	323 E. 36TH ST. N.	LOT 15, BLK 2, SKYLINE HEIGHTS ADDITION			X
9	38450-02-13-04450	LEWIS, ELIZABETH	327 E. 36TH ST. N.	LOT 16, BLK 2, SKYLINE HEIGHTS ADDITION			X
10	38450-02-13-04460	SMITH, EDMOND R., SR. AND EDMOND R., JR., & DEWAYNE ALLEN, ETAL	333 E. 36TH ST. N.	LOT 17, BLK 2, SKYLINE HEIGHTS ADDITION			X
11	38450-02-13-04470	PHOENIX AVENUE LAND TRUST	337 E. 36TH ST. N.	LOT 18, BLK 2, SKYLINE HEIGHTS ADDITION			X
12	38450-02-13-04480	341 E. 36TH ST. N. TRUST	341 E. 36TH ST. N.	LOT 19, BLK 2, SKYLINE HEIGHTS ADDITION			X
13	06750-02-24-00600	ALFRESCO GROUP, LLC	2118 S. ATLANTA PL. STE. 100	LOT 3, CARL'S COMMERCIAL CENTER			X
14	38450-02-13-04490	SHIRLEY A. AND BRENDA K. CRUTISON	345 E. 36TH ST. N.	LOT 20, BLK 2, SKYLINE HEIGHTS ADDITION			X
15	06750-02-24-00600	ALFRESCO GROUP, LLC	2118 S. ATLANTA PL. STE. 100	LOT 2, CARL'S COMMERCIAL CENTER			X
16	38450-02-13-04050	NEIGHBOR FOR NEIGHBOR, INC.	505 E. 36TH ST. N.	LOT 1, BLK 1, SKYLINE HEIGHTS ADDITION			X
17	06750-02-24-00600	ALFRESCO GROUP, LLC	2118 S. ATLANTA PL. STE. 100	LOT 1, CARL'S COMMERCIAL CENTER			X
18	29575-02-13-03580	NEIGHBOR FOR NEIGHBOR, INC.	505 E. 36TH ST. N.	NORTHLAND CENTER BLOCK 1			X
19	06775-02-24-00630	MAXWELL ASARE	502 E. 36TH ST. N.	LOT 2, BLK 1 CARL'S GREEN VALLEY ADDITION			X
24	07600-02-24-01910	CARLIS BELL AND ELZADIE R. WILLIAMS	3388 N. GARRISON AVE.	LOT 1, BLK 7, CHANDLER-FRATES SECOND ADDITION			X
25	29575-02-13-03595	BOARD OF REGENTS OF THE UNIVERSITY OF OKLAHOMA	591 E. 36TH ST. N.	PART OF BLOCK 1 NORTHLAND CENTER			X
26	07600-02-24-01900	ETONNO JONES SR.	3387 N. GARRISON AVE.	LOT 36, BLK 6, CHANDLER-FRATES SECOND ADDITION			X
27	29575-02-13-03595	BOARD OF REGENTS OF THE UNIVERSITY OF OKLAHOMA	591 E. 36TH ST. N.	PART OF BLOCK 1 NORTHLAND CENTER			X
28	07625-02-24-02790	MOHAMMAD NAEEM	3538 N. HARTFORD AVE.	LOT 1, BLK 6, CHANDLER-FRATES SECOND ADDITION AMENDED PLAT			X
29	29575-02-13-03600	FAITH CHRISTIAN FELLOWSHIP NORTH, INC.	725 E. 36TH ST. N.	NORTHLAND CENTER BLOCK 2			X
30	07750-02-24-02850	AMERITOPS, LLC	714 E. 36TH ST. N.	LOT 1, BLK 1, CHAPEL HILL ADDITION			X
31	29575-02-13-29020	FAITH CHRISTIAN FELLOWSHIP NORTH, INC.	725 E. 36TH ST. N.	UNPLATTED			X
32	90224-02-24-19050	LIGHT OF THE WORLD INTERDENOMINATIONAL DELIVERANCE CHURCH	718 E. 36TH ST. N.	UNPLATTED			X
33	90224-02-24-18750	ADETULA TRUST	736 E. 36TH ST. N.	UNPLATTED			X
34	46975-02-13-12070	COLBERT-GRANT'S INVESTMENTS, LLC	801 E. 36TH ST. N.	LOT 1, WHITE'S KNOLL BLOCK 1			X
35	07600-02-24-01200	ROBERT LEE FRAZIER, JR.	820 E. 36TH ST. N.	LOT 1 & 2, BLK 3, CHANDLER-FRATES SECOND ADDITION			X

No.	Parcel #	Owner, Address	Address	Plat	Permanent Drainage Easement	Temporary Construction Easement	Right-of-Entry Permit
36	46975-02-13-12080	COLBERT-GRANT'S INVESTMENTS, LLC	801 E. 36TH ST. N.	LOT 2, WHITE'S KNOLL BLOCK 1			X
37	07600-02-24-00850	TONNIEKA STARKS	7607 E. 79TH ST.	LOT 1, BLK 2, CHANDLER-FRATES SECOND ADDITION			X
38	07725-02-13-03000	SEVEN SEAS PROPERTIES, LLC	853 E. 36TH ST. N.	UNPLATTED			X
39	07725-02-13-03000	SEVEN SEAS PROPERTIES, LLC	911 E. 36TH ST. N.	LOT 11, BLK 11, CHNADLER-FRATES FIFTH ADDITION			X
40	07600-02-24-00650	MARCUS OFFORD	930 E. 36TH ST. N.	LOT 1, BLK 1, CHANDLER-FRATES SECOND ADDITION			X
41	07725-02-13-02490	BOWLER, ULYSSES S., AND THE BOWLER FAMILY TRUST	909 E. 36TH ST. N.	LOTS 41 & 42, BLK 8, CHNADLER-FRATES FIFTH ADDITION			X
42	29680-02-24-15960	CROSSOVER COMMUNITY IMPACT, INC.	940 E. 36TH ST. N.	LOT 1, NORTHSIDE CLINIC BLOCK 1			X
44	29680-02-24-15960	CROSSOVER COMMUNITY IMPACT, INC.	942 E. 36TH ST. N.	UNPLATTED			X
46	90224-02-24-16370	BOBBY J. PURIFY	5540 E. 77TH ST.	UNPLATTED			X
47	25400-02-13-03400	WORLD WON FOR CHRIST OUTREACH MINISTRIES, INC.	1125 E. 36TH ST. N.	LOT 2, MARKET ADDITION BLOCK 1			X
48	29680-02-24-15960	CROSSOVER COMMUNITY IMPACT, INC.	1124 E. 36TH ST. N.	UNPLATTED			X
49	20250-02-24-08560	CROSSOVER COMMUNITY IMPACT, INC.	1124 E. 36TH ST. N.	LOT 2, IRIS GARDENS ADDITION BLOCK 1			X
50	90224-02-24-15145	CITY OF TULSA, FIRE STATION #24	3520 N. PEORIA AVE.	UNPLATTED			X
51	25400-02-13-03360	COMANCHE CHRISTIAN CENTER, INC.	3636 N. PEORIA AVE.	PART OF LOT 1, MARKET ADDITION BLOCK 1			X
53	25400-02-13-03350	CHAUDHARY, NASIR & ZAHIR & MUHAMMAD A JAVED	3604 N. PEORIA AVE.	PART OF LOT 1, MARKET ADDITION BLOCK 1			X
54	90319-03-19-27305	NP36, LLC	3525 N. PEORIA AVE.	UNPLATTED			X
55	09325-03-18-00010	COWEN & CARNES CONST. CO.	BOX 3465	LT 1, BLK 1, COMANCHE PARK ADDN.			X

No.	Parcel #	Owner, Address	Address	Plat	Permanent Easement
20	90224-02-24-21250	MAXWELL ASARE	502 E. 36TH ST. N.	UNPLATTED	X
21	90224-02-24-21150	MYRTIS KIRK	520 E. 36TH ST. N.	UNPLATTED	X
22	90224-02-24-20950	ALFRESCO GROUP, LLC	2118 S. ATLANTA PL. STE. 100	UNPLATTED	X
23	90224-02-24-20850	TAHIR A. KHAN	558 E. 36TH ST. N.	UNPLATTED	X
43	90213-02-13-31420	GREATER UNION BAPTIST CHURCH	955 E. 36TH ST. N.	UNPLATTED	X
45	90213-02-13-31220	GREATER UNION BAPTIST CHURCH	955 E. 36TH ST. N.	UNPLATTED	X
52	90224-02-24-14950	MUHAMMAD RASHID	3548 N. PEORIA AVE.	UNPLATTED	X

SURVEYORS CERTIFICATE

I, James E. Harden of Tulsa County, State of Oklahoma, and a Professional Surveyor, do hereby certify that the above shown survey is true and correct to the best of my knowledge.

WITNESS MY HAND AND SEAL THIS 17th DAY OF JULY, 2020.

JAMES E. HARDEN, P.L.S. #1233

REGISTERED PROFESSIONAL LAND SURVEYOR
JAMES EDWARD HARDEN
L.S. 1233
STATE OF OKLAHOMA

PROPOSED RIGHT-OF-WAY 3

PROJECT NO. 144200

ARTERIAL STREET REHABILITATION AND WATERLINE REPLACEMENT – 36TH ST. N. – MLK BLVD TO PEORIA AVE.

CITY OF TULSA, OKLAHOMA
ENGINEERING SERVICES DEPARTMENT

PLANS AND ESTIMATES PREPARED BY: PEC — PROFESSIONAL ENGINEERING CONSULTANTS, P.A. 1924 S. UTICA AVE., SUITE 1400 TULSA, OK 74104 918-664-5400 www.pec1.com

REVISION	BY	DATE

PLAN SCALE: 1" = 40'
PROFILE SCALE:
HORIZONTAL: 1" =
VERTICAL 1" =

DRAWN	BFS	01/2020	APPROVED:
DESIGNED	JPD	01/2020	
SURVEY			
PROJ. MGR.		07/20	
LEAD ENGR.		7/20	
FIELD MGR.		8/20	
RECOMMENDED: DESIGN MANAGER		9:20	CITY ENGINEER

FILE: DRAWING: DATE: 10/30/20

ATLAS PAGE NO: 218, 219, 281, 282 SHEET 21 OF 165 SHEETS

$TIME$ $DATE$ $SCALE$ SCALE: $USER$ PLOTTED BY: XXX DSNR: $FILE$

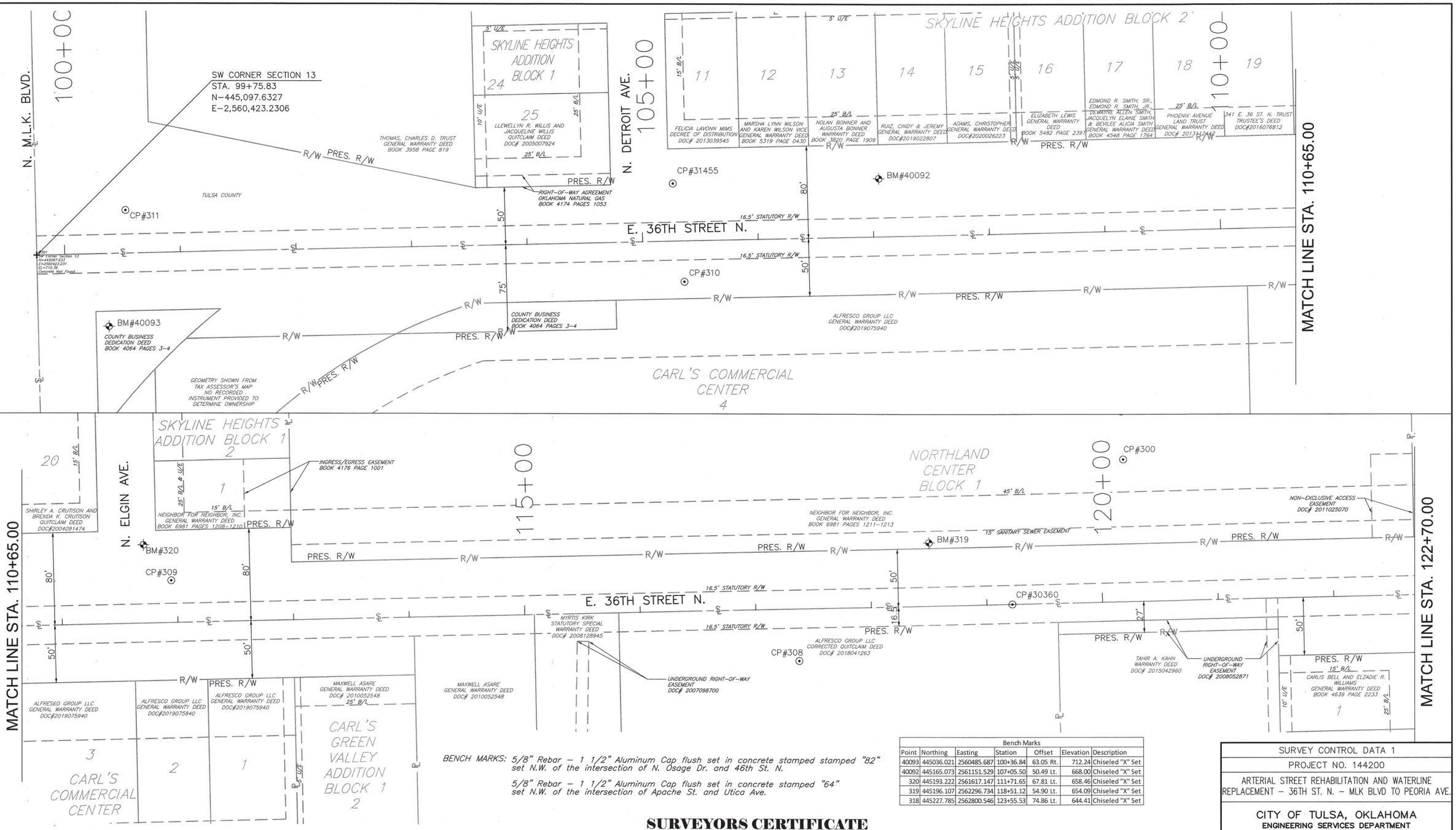

BENCH MARKS: 5/8" Rebar – 1 1/2" Aluminum Cap flush set in concrete stamped stamped "82" set N.W. of the intersection of N. Osage Dr. and 46th St. N.

5/8" Rebar – 1 1/2" Aluminum Cap flush set in concrete stamped "64" set N.W. of the intersection of Apache St. and Utica Ave.

Bench Marks

Point	Northing	Easting	Station	Offset	Elevation	Description
40093	445036.021	2560485.687	100+36.84	63.05 Rt.	712.24	Chiseled "X" Set
40092	445165.073	2561151.529	107+05.50	50.49 Lt.	668.00	Chiseled "X" Set
320	445193.222	2561617.147	111+71.65	67.81 Lt.	658.46	Chiseled "X" Set
319	445196.107	2562296.734	118+51.12	54.90 Lt.	654.09	Chiseled "X" Set
318	445227.785	2562800.546	123+55.53	74.86 Lt.	644.41	Chiseled "X" Set

Control Points

Number	Northing	Easting	Station	Offset	Elevation	Description
311	445136.79	2560499.87	100+53.36	37.37 Lt.	716.13	3/8" Iron Pin Set W/Cap (Harden)
310	445075.31	2560983.47	105+35.40	35.34 Rt.	673.32	3/8" Iron Pin Set W/Cap (Harden)
31455	445160.43	2560973.35	105+27.26	49.99 Lt.	676.27	Magic Marker "X" Set
309	445162.42	2561641.27	111+95.05	36.46 Lt.	658.41	3/8" Iron Pin Set W/Cap (Harden)
308	445093.65	2562184.61	117+36.65	44.92 Rt.	647.43	3/8" Iron Pin Set W/Cap (Harden)
30360	445142.83	2562368.91	119+22.03	0.04 Rt.	646.53	3/8" Iron Pin Found
300	445268.20	2562464.69	120+20.70	123.08 Lt.	657.70	3/8" Iron Pin Set W/Cap (Harden)
301	445309.73	2562462.97	120+19.97	164.63 Lt.	660.00	Mag Nail Set
307	445184.42	2562751.65	123+05.64	32.65 Lt.	644.05	3/8" Iron Pin Set W/Cap (Harden)

SURVEY PROVIDED BY
HARDEN & ASSOCIATES SURVEYING & MAPPING, P.C.
2001 S. 114TH E. AVE
TULSA, OK

HORIZONTAL DATUM: HORIZONTAL CONTROL BASED ON OKLAHOMA STATE PLANE COORDINATES, NZ 3501, NAD83 (1993)

VERTICAL DATUM: NAVD 1988
SCALE FACTOR: 0.99991832

SURVEYORS CERTIFICATE

I, James E. Harden of Tulsa County, State of Oklahoma, and a Professional Surveyor, do hereby certify that the above shown survey is true and correct to the best of my knowledge.

WITNESS MY HAND AND SEAL THIS 17th DAY OF JULY, 2020.

JAMES E. HARDEN, P.L.S. #1233

REGISTERED PROFESSIONAL LAND SURVEYOR
JAMES EDWARD HARDEN
L.S. 1233
STATE OF OKLAHOMA

SURVEY CONTROL DATA 1
PROJECT NO. 144200
ARTERIAL STREET REHABILITATION AND WATERLINE REPLACEMENT – 36TH ST. N. – MLK BLVD TO PEORIA AVE.

CITY OF TULSA, OKLAHOMA
ENGINEERING SERVICES DEPARTMENT

PLANS AND ESTIMATES PREPARED BY: PEC PROFESSIONAL ENGINEERING CONSULTANTS, P.A. 1924 S. UTICA AVE., SUITE 1400 TULSA, OK 74104 918-864-5400 www.pec1.com

REVISION	BY	DATE

PLAN SCALE: 1" = 40'
HORIZONTAL: 1" =
VERTICAL 1" =
PROFILE SCALE:

DRAWN	BFS	01/2020	APPROVED:
DESIGNED	JPD	01/2020	
SURVEY			
PROJ. MGR.			
LEAD ENGR.			
FIELD MGR.			
RECOMMENDED: DESIGN MANAGER			CITY ENGINEER

FILE: DRAWING: DATE: 10/30/20
ATLAS PAGE NO: 218, 219, 281, 282
SHEET 22 OF 165 SHEETS

DSN#: XXX PLOTTED BY: $USER$ SCALE: $SCALE$ DATE: $DATE$ TIME: $TIME$

MATCH LINE STA. 122+70.00

MATCH LINE STA. 133+10.00

MATCH LINE STA. 133+10.00

MATCH LINE STA. 140+70.00

N. GARRISON AVE.

N. HARTFORD AVE.

N. KENOSHA AVE.

N. LANSING AVE.

N. LANSING PL.

OSAGE PRAIRIE TRAIL

E. 36TH STREET N.

125+00

130+00

135+00

140+00

BM#318

BM#316

BM#317

CP#307

CP#400

CP#401

CP#40102

CP#305

CP#306

CP#354

CP#40094

CP#40095

CP#40096

CP#353

CP#304

CP#40101

CP#40100

CP#351

CP#303

BM#314

CP#101

BM#315

BOARD OF REGENTS OF THE UNIVERSITY OF OKLAHOMA SPECIAL WARRANTY DEED DOC# 2009069103

BOARD OF REGENTS OF THE UNIVERSITY OF OKLAHOMA SPECIAL WARRANTY DEED DOC# 2009069103

NORTHLAND CENTER BLOCK 2

FAITH CHRISTIAN FELLOWSHIP NORTH, INC. QUITCLAIM DEED BOOK 5743 PAGE 614

15' SANITARY SEWER EASEMENT

16.5' STATUTORY R/W

1395 SLA Corner-Section-Mp N=445159.181 E=2563089.798 EL=640.89 Brass Cap Found

S 1/4 CORNER SECTION 13
STA. 126+23.11
N=445,159.1608
E=2,563,069.7963

AMERITOPS LLC WARRANTY DEED DOC#2017036773

CHAPEL HILL ADDITION BLOCK 1

LIGHT OF THE WORLD INTERDENOMINATIONAL DELIVERANCE CHURCH GENERAL WARRANTY DEED BOOK 5797 PAGE 1252

ADETULA TRUST GENERAL WARRANTY DEED DOC#2016053875

JONES, ETONNO SR. QUIT CLAIM DEED DOC#2019046226

NAEEM, MOHAMMAD GENERAL WARRANTY DEED DOC#2020036291

CHANDLER-FRATES SECOND ADDITION BLOCK 6

CHANDLER-FRATES SECOND ADDITION 2 AMENDED PLAT BLOCK 6, LOT 1-6

WHITE'S KNOLL BLOCK 1

COLBERT-GRANT'S INVESTMENTS LLC GENERAL WARRANTY DEED DOC#2018039753

COLBERT-GRANT'S INVESTMENTS LLC GENERAL WARRANTY DEED DOC#2018039753

BROWN, LESLIE JR QUIT CLAIM DEED DOC#2019101067

RIGHT-OF-WAY EASEMENT PUBLIC SERVICE COMPANY DOC# 2014067696

REVERSE PARKING AGREEMENT BOOK 3766 PAGES 647-650

THE BOWLER FAMILY TRUST QUITCLAIM DEED AND MEMORANDUM OF TRUST DOC# 2014116142

GREATER UNION BAPTIST CHURCH GENERAL WARRANTY DEED BOOK 4079 PAGE 1708

TULSA COUNTY PER TULSA COUNTY LAND RECORDS NO RECORDED INSTRUMENT PROVIDED

CROSSOVER COMMUNITY IMPACT, INC. QUITCLAIM DEED DOC# 2014109172

NORTHSIDE CLINIC BLOCK 1

FRAZIER, ROBERT LEE JR GUARDIAN'S DEED DOC#2019065174

CHANDLER-FRATES SECOND ADDITION BLOCK 3

REVERSE PARKING AGREEMENT BOOK 3777 PAGES 326-329

SIDEWALK EASM'T BK 6060 PG 172-173

STARKS, TONNIEKA WARRANTY DEED DOC#2020018551

CHANDLER-FRATES SECOND ADDITION BLOCK 2

DEED OF DEDICATION BOOK 2573 PAGE 415

MARCUS OFFORD GENERAL WARRANTY DEED BOOK 4004 PAGE 1493 BOOK 4004 PAGE 1502

CHANDLER-FRATES SECOND ADDITION BLOCK 1

Control Points						
Number	Northing	Easting	Station	Offset	Elevation	Description
306	445113.57	2563085.04	126+37.29	45.93 Rt.	641.31	3/8" Iron Pin Set W/Cap (Harden)
400	445203.49	2563245.29	127+99.59	40.24 Lt.	641.75	3/8" Iron Pin Set W/Cap (Harden)
40094	445114.44	2563296.39	128+48.60	49.97 Rt.	643.50	3/8" Iron Pin Found W/Cap (White)
354	445123.56	2563350.79	129+03.20	42.13 Rt.	644.36	3/8" Iron Pin Set W/Cap (Harden)
401	445295.50	2563421.73	129+78.12	128.12 Lt.	641.25	Mag Nail Set
40095	445121.59	2563613.61	131+65.82	50.12 Rt.	648.54	3/4" Iron Pin Found
40096	445121.76	2563616.29	131+68.59	50.09 Rt.	649.66	Chiseled "X" Found
40102	445223.77	2563699.47	132+54.11	49.96 Lt.	649.35	3/8" Iron Pin Found SPINNER
305	445217.29	2563705.20	132+59.69	43.34 Lt.	650.16	3/8" Iron Pin Set W/Cap (Harden)
40097	445124.93	2563743.97	132+96.31	49.90 Rt.	652.17	3/8" Iron Pin Found
353	445137.50	2563992.21	135+44.78	43.09 Rt.	655.58	3/8" Iron Pin Set W/Cap (Harden)
101	445220.98	2564284.61	138+39.04	33.56 Lt.	655.62	Chiseled "X" Set
40101	445239.20	2564360.45	139+15.28	50.01 Lt.	655.39	3/8" Iron Pin Found SPINNER
304	445149.23	2564340.49	138+93.23	39.47 Rt.	653.93	3/8" Iron Pin Set W/Cap (Harden)
40100	445241.92	2564487.16	140+42.02	49.79 Lt.	654.71	3/8" Iron Pin Found
351	445242.17	2564570.39	141+25.23	48.10 Lt.	652.68	3/8" Iron Pin Set W/Cap (Harden)
303	445161.19	2564782.06	143+34.96	37.78 Rt.	646.73	3/8" Iron Pin Set W/Cap (Harden)
350	445179.45	2565152.34	147+05.57	28.13 Rt.	641.67	3/8" Iron Pin Set W/Cap (Harden)
40099	445155.92	2565082.83	146+35.53	50.03 Rt.	642.31	3/8" Iron Pin Found

Bench Marks						
Point	Northing	Easting	Station	Offset	Elevation	Description
317	445086.581	2563295.620	128+47.19	77.81 Rt.	645.54	Chiseled "X" Set
316	445244.475	2563765.091	133+20.20	69.13 Lt.	652.13	Chiseled "X" Set
315	445133.979	2564161.555	137+13.99	50.56 Rt.	656.29	Chiseled "X" Set
314	445246.502	2564647.404	142+02.33	50.56 Lt.	650.90	Chiseled "X" Set
313	445307.565	2565142.645	146+98.85	100.18 Lt.	641.26	Chiseled "X" Set

SURVEYORS CERTIFICATE

I, James E. Harden of Tulsa County, State of Oklahoma, and a Professional Surveyor, do hereby certify that the above shown survey is true and correct to the best of my knowledge.

WITNESS MY HAND AND SEAL THIS 17th DAY OF JULY, 2020.

JAMES E. HARDEN, P.L.S. #1233

REGISTERED PROFESSIONAL LAND SURVEYOR — JAMES EDWARD HARDEN L.S. 1233 — STATE OF OKLAHOMA

SURVEY CONTROL DATA 2

PROJECT NO. 144200

ARTERIAL STREET REHABILITATION AND WATERLINE REPLACEMENT – 36TH ST. N. – MLK BLVD TO PEORIA AVE.

CITY OF TULSA, OKLAHOMA
ENGINEERING SERVICES DEPARTMENT

PLANS AND ESTIMATES PREPARED BY: PEC — PROFESSIONAL ENGINEERING CONSULTANTS, P.A. 1924 S. UTICA AVE., SUITE 1400 TULSA, OK 74104 918-664-5400 www.pec1.com

REVISION	BY	DATE

PLAN SCALE: 1" = 40'
PROFILE SCALE:
HORIZONTAL: 1" =
VERTICAL 1" =

DRAWN	BFS	01/2020
DESIGNED	JPD	01/2020
SURVEY		
PROJ. MGR.		07/20
LEAD ENGR.		7/20
FIELD MGR.		8/20
RECOMMENDED: DESIGN MANAGER		

APPROVED: CITY ENGINEER

FILE: DRAWING:

DATE: 10/30/20

ATLAS PAGE NO: 218, 219, 281, 282

SHEET 23 OF 165 SHEETS

DSNR: XXX PLOTTED BY: $USER$ SCALE: $SCALE$ $DATE$ $FILE$ $TIME$

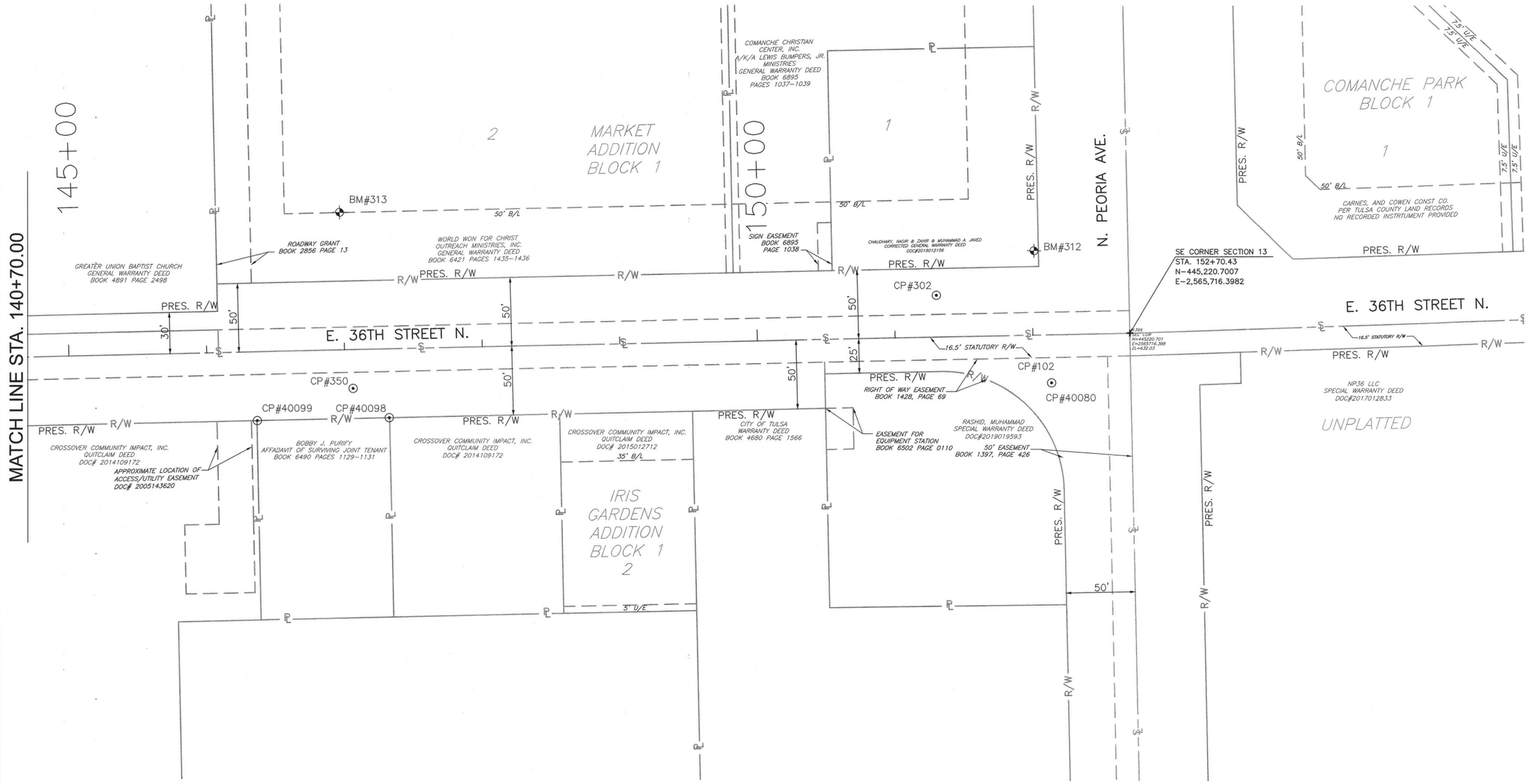

Control Points						
Number	Northing	Easting	Station	Offset	Elevation	Description
40098	445158.22	2565178.58	147+31.31	49.96 Rt.	641.88	3/8" Iron Pin Found W/Cap (Ramsey)
302	445247.87	2565575.95	151+30.66	30.42 Lt.	633.38	3/8" Iron Pin Set W/Cap (Harden)
102	445184.60	2565659.60	152+12.80	34.77 Rt.	632.22	Chiseled "X" Set
40080	445184.58	2565659.56	152+12.77	34.79 Rt.	632.28	Chiseled "X" Found

Bench Marks						
Point	Northing	Easting	Station	Offset	Elevation	Description
312	445280.595	2565646.823	152+02.27	61.49 Lt.	632.88	Chiseled "X" Set
1399	445220.701	2565716.398	152+70.43	0.00 Rt.	632.03	Brass Cap Found

SURVEYORS CERTIFICATE

I, James E. Harden of Tulsa County, State of Oklahoma, and a Professional Surveyor, do hereby certify that the above shown survey is true and correct to the best of my knowledge.

WITNESS MY HAND AND SEAL THIS 17th DAY OF JULY, 2020.

JAMES E. HARDEN, P.L.S. #1233

REGISTERED PROFESSIONAL LAND SURVEYOR
JAMES EDWARD HARDEN
L.S. 1233
STATE OF OKLAHOMA

REVISION	BY	DATE

SURVEY CONTROL DATA 3

PROJECT NO. 144200

ARTERIAL STREET REHABILITATION AND WATERLINE REPLACEMENT – 36TH ST. N. – MLK BLVD TO PEORIA AVE.

CITY OF TULSA, OKLAHOMA
ENGINEERING SERVICES DEPARTMENT

PLANS AND ESTIMATES PREPARED BY: PEC PROFESSIONAL ENGINEERING CONSULTANTS, P.A. 1924 S. UTICA AVE., SUITE 1400 TULSA, OK 74104 918-664-5400 www.pec1.com

PLAN SCALE: 1" = 40'	DRAWN	BFS	01/2020	APPROVED:
	DESIGNED	JPD	01/2020	
	SURVEY			
PROFILE SCALE:	PROJ. MGR.			
HORIZONTAL: 1" =	LEAD ENGR.			
	FIELD MGR.			
VERTICAL 1" =	RECOMMENDED: DESIGN MANAGER			CITY ENGINEER
FILE:	DRAWING:			DATE: 10/30/20
ATLAS PAGE NO: 218, 219, 281, 282				SHEET 24 OF 165 SHEETS

DGN: XXX PLOTTED BY: $USER$ SCALE: $SCALE$ $DATE$ $TIME$ $PAGES$

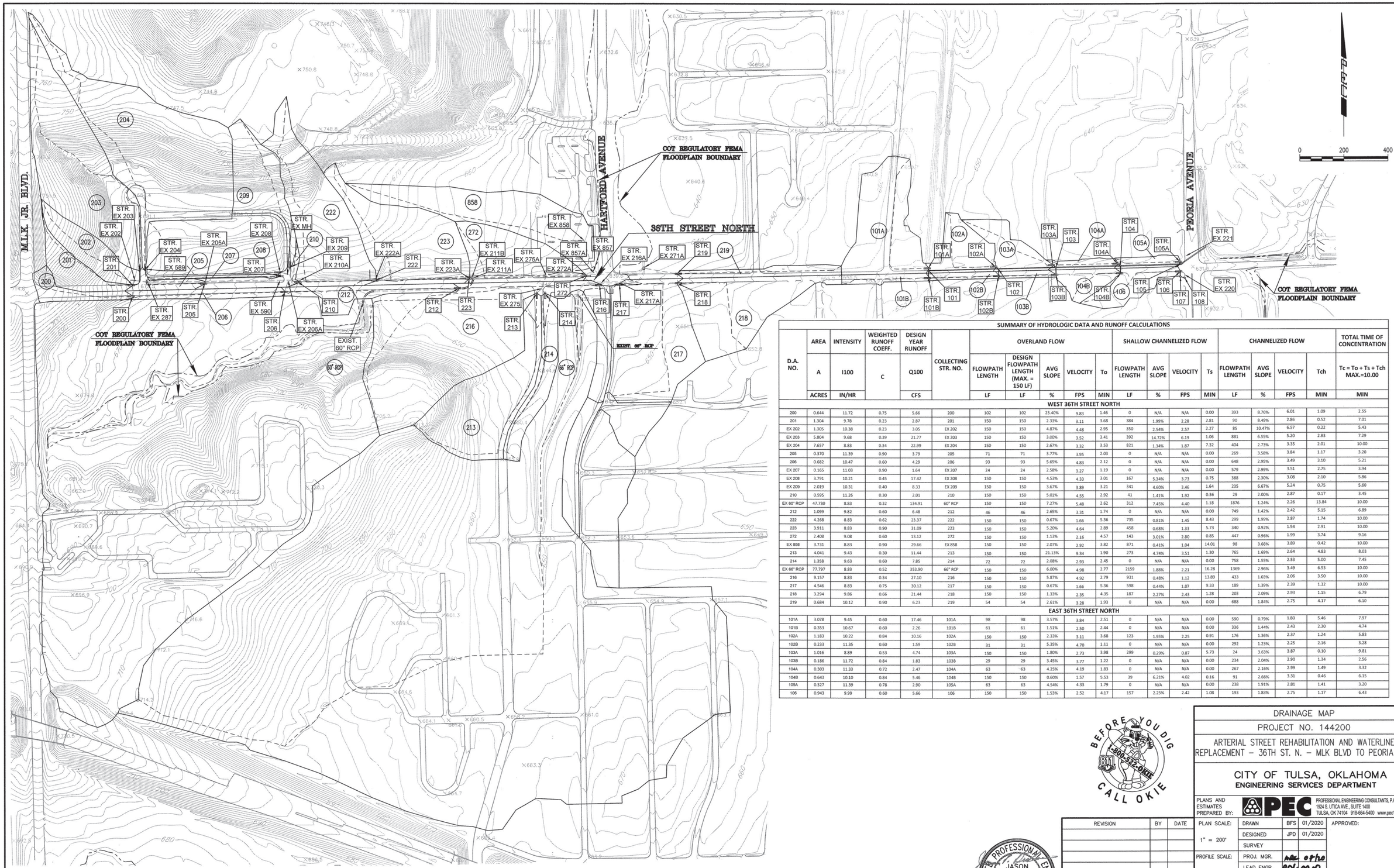

SUMMARY OF HYDROLOGIC DATA AND RUNOFF CALCULATIONS

D.A. NO.	AREA	INTENSITY	WEIGHTED RUNOFF COEFF.	DESIGN YEAR RUNOFF	COLLECTING STR. NO.	OVERLAND FLOW					SHALLOW CHANNELIZED FLOW				CHANNELIZED FLOW				TOTAL TIME OF CONCENTRATION
	A	I100	C	Q100		FLOWPATH LENGTH	DESIGN FLOWPATH LENGTH (MAX. = 150 LF)	AVG SLOPE	VELOCITY	To	FLOWPATH LENGTH	AVG SLOPE	VELOCITY	Ts	FLOWPATH LENGTH	AVG SLOPE	VELOCITY	Tch	Tc = To + Ts + Tch MAX.=10.00
	ACRES	IN/HR		CFS		LF	LF	%	FPS	MIN	LF	%	FPS	MIN	LF	%	FPS	MIN	MIN
WEST 36TH STREET NORTH																			
200	0.644	11.72	0.75	5.66	200	102	102	23.40%	9.83	1.46	0	N/A	N/A	0.00	393	8.76%	6.01	1.09	2.55
201	1.304	9.78	0.23	2.87	201	150	150	2.33%	3.11	3.68	384	1.99%	2.28	2.81	90	8.49%	2.86	0.52	7.01
EX 202	1.305	10.38	0.23	3.05	EX 202	150	150	4.87%	4.48	2.95	350	2.54%	2.57	2.27	85	10.47%	6.57	0.22	5.43
EX 203	5.804	9.68	0.39	21.77	EX 203	150	150	3.00%	3.52	3.41	392	14.72%	6.19	1.06	881	6.55%	5.20	2.83	7.29
EX 204	7.657	8.83	0.34	22.99	EX 204	150	150	2.67%	3.32	3.53	821	1.34%	1.87	7.32	404	2.73%	3.35	2.01	10.00
205	0.370	11.39	0.90	3.79	205	71	71	3.77%	3.95	2.03	0	N/A	N/A	0.00	269	3.58%	3.84	1.17	3.20
206	0.682	10.47	0.60	4.29	206	93	93	5.65%	4.83	2.12	0	N/A	N/A	0.00	648	2.95%	3.49	3.10	5.21
EX 207	0.165	11.03	0.90	1.64	EX 207	24	24	2.58%	3.27	1.19	0	N/A	N/A	0.00	579	2.99%	3.51	2.75	3.94
EX 208	3.791	10.21	0.45	17.42	EX 208	150	150	4.53%	4.33	3.01	167	5.34%	3.73	0.75	388	2.30%	3.08	2.10	5.86
EX 209	2.019	10.31	0.40	8.33	EX 209	150	150	3.67%	3.89	3.21	341	4.60%	3.46	1.64	235	6.67%	5.24	0.75	5.60
210	0.595	11.26	0.30	2.01	210	150	150	5.01%	4.55	2.92	41	1.41%	1.92	0.36	29	2.00%	2.87	0.17	3.45
EX 60" RCP	47.730	8.83	0.32	134.91	60" RCP	150	150	7.27%	5.48	2.62	312	7.45%	4.40	1.18	1876	1.24%	2.26	13.84	10.00
212	1.099	9.82	0.60	6.48	212	46	46	2.65%	3.31	1.74	0	N/A	N/A	0.00	749	1.42%	2.42	5.15	6.89
222	4.268	8.83	0.62	23.37	222	150	150	0.67%	1.66	5.36	735	0.81%	1.45	8.43	299	1.99%	2.87	1.74	10.00
223	3.911	8.83	0.90	31.09	223	150	150	5.20%	4.64	2.89	458	0.68%	1.33	5.73	340	0.92%	1.94	2.91	10.00
272	2.408	9.08	0.60	13.12	272	150	150	1.13%	2.16	4.57	143	3.01%	2.80	0.85	447	0.96%	1.99	3.74	9.16
EX 858	3.731	8.83	0.90	29.66	EX 858	150	150	2.07%	2.92	3.82	871	0.41%	1.04	14.01	98	3.66%	3.89	0.42	10.00
213	4.041	9.43	0.30	11.44	213	150	150	21.13%	9.34	1.90	273	4.74%	3.51	1.30	765	1.69%	2.64	4.83	8.03
214	1.358	9.63	0.60	7.85	214	72	72	2.08%	2.93	2.45	0	N/A	N/A	0.00	758	1.55%	2.53	5.00	7.45
EX 66" RCP	77.797	8.83	0.52	353.90	66" RCP	150	150	6.00%	4.98	2.77	2159	1.88%	2.21	16.28	1369	2.96%	3.49	6.53	10.00
216	9.157	8.83	0.34	27.10	216	150	150	5.87%	4.92	2.79	931	0.48%	1.12	13.89	433	1.03%	2.06	3.50	10.00
217	4.546	8.83	0.75	30.12	217	150	150	0.67%	1.66	5.36	598	0.44%	1.07	9.33	189	1.39%	2.39	1.32	10.00
218	3.294	9.86	0.66	21.44	218	150	150	1.33%	2.35	4.35	187	2.27%	2.43	1.28	203	2.09%	2.93	1.15	6.79
219	0.684	10.12	0.90	6.23	219	54	54	2.61%	3.28	1.93	0	N/A	N/A	0.00	688	1.84%	2.75	4.17	6.10
EAST 36TH STREET NORTH																			
101A	3.078	9.45	0.60	17.46	101A	98	98	3.57%	3.84	2.51	0	N/A	N/A	0.00	590	0.79%	1.80	5.46	7.97
101B	0.353	10.67	0.60	2.26	101B	61	61	1.51%	2.50	2.44	0	N/A	N/A	0.00	336	1.44%	2.43	2.30	4.74
102A	1.183	10.22	0.84	10.16	102A	150	150	2.33%	3.11	3.68	123	1.95%	2.25	0.91	176	1.36%	2.37	1.24	5.83
102B	0.233	11.35	0.60	1.59	102B	31	31	5.35%	4.70	1.11	0	N/A	N/A	0.00	292	1.23%	2.25	2.16	3.28
103A	1.016	8.89	0.53	4.74	103A	150	150	1.80%	2.73	3.98	299	0.29%	0.87	5.73	24	3.63%	3.87	0.10	9.81
103B	0.186	11.72	0.84	1.83	103B	29	29	3.45%	3.77	1.22	0	N/A	N/A	0.00	234	2.04%	2.90	1.34	7.56
104A	0.303	11.33	0.72	2.47	104A	63	63	4.25%	4.19	1.83	0	N/A	N/A	0.00	267	2.16%	2.99	1.49	3.32
104B	0.643	10.10	0.84	5.46	104B	150	150	0.60%	1.57	5.53	39	6.21%	4.02	0.16	91	2.66%	3.31	0.46	6.15
105A	0.327	11.39	0.78	2.90	105A	63	63	4.54%	4.33	1.79	0	N/A	N/A	0.00	238	1.91%	2.81	1.41	3.20
106	0.943	9.99	0.60	5.66	106	150	150	1.53%	2.52	4.17	157	2.25%	2.42	1.08	193	1.83%	2.75	1.17	6.43

BEFORE YOU DIG 1-800-522-OKIE CALL OKIE

LICENSED PROFESSIONAL ENGINEER JASON P. DICKMAN 27639 OKLAHOMA
07/19/2020

REVISION	BY	DATE

DRAINAGE MAP

PROJECT NO. 144200

ARTERIAL STREET REHABILITATION AND WATERLINE REPLACEMENT – 36TH ST. N. – MLK BLVD TO PEORIA AVE.

CITY OF TULSA, OKLAHOMA
ENGINEERING SERVICES DEPARTMENT

PLANS AND ESTIMATES PREPARED BY: PEC PROFESSIONAL ENGINEERING CONSULTANTS, P.A. 1924 S. UTICA AVE., SUITE 1400 TULSA, OK 74104 918-884-5400 www.pec1.com

PLAN SCALE: 1" = 200'	DRAWN	BFS	01/2020	APPROVED:
	DESIGNED	JPD	01/2020	
	SURVEY			
PROFILE SCALE:	PROJ. MGR.			
HORIZONTAL: 1" =	LEAD ENGR.			
	FIELD MGR.			
VERTICAL 1" =	RECOMMENDED: DESIGN MANAGER			CITY ENGINEER
FILE:	DRAWING:			DATE:
ATLAS PAGE NO: 218, 219, 281, 282				SHEET 25 OF 165 SHEETS

DSN#: XXX PLOTTED BY: $USER# SCALE: $SCALE# $DATE# $TIME#

SUMMARY OF INLET DESIGN

STR. NO.	DESIGN	NUMBER OF GRATES	NUMBER OF UPSTREAM HOODS	TOP OF GRATE FT	FLOWLINE FT	INNER STR. HEIGHT VF	LONGITUDINAL SLOPE AT INLET %	CROSS SLOPE AT INLET %	CLOGGING FACTOR	Q (100) CFS	QCARRYOVER CFS	SUM Q AT INLET CFS	SPREAD AT INLET FT	DEPTH AT INLET FT	QINTERCEPT CFS	QBYPASS CFS	BYPASS TARGET STR. NO.	INLET EFFICIENCY %
36TH STREET NORTH (WEST)																		
200	DES 2(B)	2	2	678.58	673.57	5.01	8.50%	2.02%	1.0	5.66	0.00	5.66	8.51	0.17	2.91	2.75	206	51%
201	DES 2(C)	2	3	678.57	674.87	3.70	7.39%	2.80%	1.0	2.87	0.00	2.87	5.03	0.14	2.16	0.71	205	75%
EX 202	EX AREA INLET	4	0	678.14	671.59	6.55	0.00%	12.31%	0.8	3.05	0.00	3.81	2.20	0.27	3.81	0.00	SUMP	100%
EX 203	EXIST. DES 2(STD)	2	0	676.50	672.20	4.30	1.67%	4.53%	1.0	21.77	0.00	21.77	11.78	0.53	8.77	13.01	205	40%
EX 204	EXIST. DES 2(STD)	2	0	676.48	670.81	5.67	2.95%	2.19%	1.0	22.99	0.00	22.99	13.00	0.28	7.69	15.31	205	33%
205	DES 4(D)	4	4	665.12	662.82	2.30	2.44%	1.57%	1.0	3.79	29.02	32.81	13.00	0.20	14.32	18.49	210	44%
206	DES 2(B)	2	2	657.09	654.49	2.60	2.29%	3.87%	1.0	4.29	2.75	7.04	5.77	0.22	3.16	1.12	212	74%
EX 207	EXIST. DES 1(STD)	1	0	657.97	654.82	3.15	0.46%	5.98%	1.0	1.64	0.00	1.64	4.34	0.26	1.29	0.35	210	79%
EX 208	EXIST. DES 2(STD)	2	0	658.20	654.45	3.75	3.04%	6.26%	1.0	17.42	0.00	17.42	7.86	0.49	9.07	8.35	210	52%
EX 209	EXIST. DES 1(STD)	1	0	658.42	654.92	3.50	2.38%	4.89%	1.0	8.33	0.00	8.33	7.46	0.36	4.22	4.11	210	51%
210	DES 4(STD)	4	0	656.61	653.26	3.35	2.03%	0.29%	1.0	2.01	31.30	33.31	13.00	0.04	10.36	22.96	222	31%
EX 60" RCP	EX 60" END SECTION	0	0	648.76	643.76	5.00	1.48%	10.00%	1.0	134.91	0.00	134.91	2.71	0.27	134.91	0.00	SUMP	100%
212	DES 2(D)	2	4	646.02	637.12	8.90	1.15%	1.38%	1.0	6.48	1.12	7.60	13.00	0.18	3.96	3.64	216	52%
222	DES 4(D+A)	4	5	649.67	645.85	3.82	0.88%	1.02%	1.0	23.37	22.96	46.33	13.00	0.13	20.36	25.97	223	44%
223	DES 4(D+A)	4	5	645.48	640.78	4.70	0.86%	1.55%	1.0	31.09	25.97	57.07	13.00	0.20	26.63	30.44	272	47%
272	DES 2(D)	2	4	640.69	637.23	3.46	1.57%	2.29%	1.0	13.12	30.44	43.55	13.00	0.30	18.71	24.84	EX 598 DS	43%
EX 858	EX AREA INLET	2	0	638.91	635.56	3.35	0.00%	3.66%	0.8	29.66	0.00	37.07	7.40	0.27	37.07	0.00	SUMP	100%
213	DES 4(D)	4	4	642.57	638.62	3.95	0.00%	1.50%	0.7	11.44	0.00	16.34	18.06	0.27	16.34	0.00	SUMP	100%
214	DES 2(D)	2	4	642.26	637.91	4.35	0.00%	3.47%	0.7	7.85	0.00	11.21	7.80	0.27	11.21	0.00	SUMP	100%
EX 66" RCP	EX 66" END SECTION	0	0	639.47	633.97	5.50	1.36%	10.00%	1.0	353.90	0.00	353.90	2.71	0.27	353.90	0.00	SUMP	100%
216	DES 4(C)	4	3	640.12	636.57	3.55	0.60%	3.04%	1.0	27.10	3.64	30.73	13.00	0.40	17.69	13.04	217	58%
217	DES 4(2A)	4	2	640.34	635.59	4.75	0.00%	2.07%	0.7	30.12	24.62	78.20	13.08	0.27	78.20	0.00	SUMP	100%
218	DES 2(D)	2	4	643.10	639.65	3.45	2.02%	2.20%	1.0	21.44	0.00	21.44	13.00	0.29	9.86	11.58	217	46%
219	DES 2(B)	2	2	643.15	639.18	3.97	1.88%	2.35%	1.0	6.23	0.00	6.23	10.09	0.24	3.37	2.86	EX 593 DS	54%
36TH STREET NORTH (EAST)																		
101A	DES 5(D)	5	4	650.86	648.19	2.67	2.05%	3.00%	1.0	17.46	0.00	17.46	11.41	0.34	10.88	6.57	102A	62%
101B	DES 2(B)	2	2	650.90	648.23	2.67	2.07%	3.00%	1.0	2.26	0.00	2.26	5.23	0.16	1.77	0.49	102B	78%
102A	DES 5(D)	5	4	646.64	643.97	2.67	0.59%	3.00%	1.0	10.16	6.57	16.74	12.51	0.38	12.06	4.67	103A	72%
102B	DES 2(B)	2	2	646.55	643.88	2.67	0.89%	3.00%	1.0	1.59	0.49	2.08	5.42	0.16	1.71	0.36	103B	82%
103A	DES 4(D)	4	4	642.09	639.42	2.67	1.84%	3.00%	1.0	4.74	4.67	9.41	8.80	0.26	6.66	2.75	104A	71%
103B	DES 2(D)	2	4	641.84	639.17	2.67	1.84%	3.00%	1.0	1.83	0.36	2.19	4.51	0.14	1.93	0.26	104B	88%
104A	DES 4(D)	4	4	636.27	633.60	2.67	2.56%	3.00%	1.0	2.47	2.75	5.23	6.31	0.19	4.16	1.07	105A	80%
104B	DES 4(D)	4	4	636.08	633.41	2.67	2.56%	3.00%	1.0	5.46	0.26	5.72	6.61	0.20	4.46	1.26	106	78%
105A	DES 2(D)	2	4	630.88	628.21	2.67	1.00%	3.00%	1.0	2.90	1.07	3.97	6.50	0.20	3.23	0.74	OFFSITE	81%
106	DES 2(D)	2	4	630.92	628.25	2.67	1.00%	3.00%	1.0	5.66	1.26	6.91	8.72	0.26	4.94	1.97	OFFSITE	71%

$TIME$ $DATE$ $SCALE$ SCALE: $USER$ PLOTTED BY: XXX DSN#: $FILE$

LICENSED PROFESSIONAL ENGINEER
JASON P. DICKMAN 27639
OKLAHOMA
07/19/2020

REVISION	BY	DATE

SUMMARY OF INLET DESIGN

PROJECT NO. 144200

ARTERIAL STREET REHABILITATION AND WATERLINE REPLACEMENT – 36TH ST. N. – MLK BLVD TO PEORIA AVE.

CITY OF TULSA, OKLAHOMA
ENGINEERING SERVICES DEPARTMENT

PLANS AND ESTIMATES PREPARED BY: PEC PROFESSIONAL ENGINEERING CONSULTANTS, P.A. 1924 S. UTICA AVE., SUITE 1400 TULSA, OK 74104 918-664-5400 www.pec1.com

	DRAWN	BFS	01/2020	APPROVED:
	DESIGNED	JPD	01/2020	
	SURVEY			
	PROJ. MGR.		10/30/20	
	LEAD ENGR.		10/30/20	
	FIELD MGR.		10/30/20	
	RECOMMENDED: DESIGN MANAGER	HAJ 9-20		CITY ENGINEER

FILE: DRAWING: DATE: 10/30/20

ATLAS PAGE NO: 218, 219, 281, 282 SHEET 26 OF 165 SHEETS

SUMMARY OF PIPE DESIGN

START NODE STR. NO.	END NODE STR. NO.	DIAM	LENGTH	SLOPE	INV UP	INV DN	T/G UP	T/G DN	HGL UP	HGL DN	EGL UP	EGL DN	Q100	QCAPACITY	VELOCITY
		INCH	LF	%	FT	FT	FT	FT	FT	FT	FT	FT	CFS	CFS	FPS
36TH STREET SOUTH (WEST)															
200	201	18	49.36	2.63	674.87	673.57	677.91	677.90	688.07	683.14	689.78	688.34	5.66	18.52	10.48
201	EX 202	18	24.66	8.03	673.57	671.59	677.90	677.47	683.14	686.74	688.34	687.89	8.53	32.33	18.30
EX 202	EX 287	24	57.82	1.21	671.59	670.89	677.47	674.62	686.74	682.38	687.89	685.94	12.34	27.04	8.61
EX 287	EX 205A	42	262.59	1.78	664.54	659.87	674.62	665.30	682.38	679.48	685.94	683.29	57.11	145.74	15.15
EX 205A	EX 590	42	338.66	1.90	659.87	653.42	665.30	658.40	679.48	675.92	683.29	679.96	89.92	150.82	15.68
EX 590	EX 206A	42	36.77	2.02	653.42	652.68	658.40	655.67	675.92	673.45	679.96	677.49	117.31	155.15	16.13
EX 206A	EX 210A	42	50.84	2.02	652.68	651.65	655.67	655.74	673.45	670.75	677.49	674.79	124.35	155.17	16.13
EX 210A	EX 222A	42	345.37	2.02	651.65	644.69	655.74	648.88	670.75	661.49	674.79	665.53	157.66	155.18	16.13
EX 222A	EX 223A	42	426.70	2.02	644.69	636.09	648.88	644.50	661.49	644.51	665.53	648.54	203.99	155.18	16.13
EX 223A	EX 211B	42	12.31	2.01	636.09	635.84	644.50	645.47	644.51	642.82	648.54	646.82	261.06	155.09	16.12
EX 211B	EX 211A	42	8.52	1.99	635.84	635.67	645.47	644.96	642.82	642.88	646.82	645.16	261.06	154.35	16.04
EX 211A	EX 275A	78	335.35	0.50	632.84	631.16	644.96	642.14	642.88	640.02	645.16	642.31	403.57	402.73	12.14
EX 275A	EX 272A	78	179.84	0.50	631.16	630.26	642.14	639.83	640.02	638.38	642.31	640.68	431.11	402.65	12.13
EX 272A	EX 857A	78	36.08	0.50	630.26	630.08	639.83	639.37	638.38	637.55	640.68	639.83	474.67	403.34	12.16
EX 857A	EX 271A	78	231.78	0.50	630.08	628.93	639.37	639.67	637.55	630.69	639.83	635.52	511.74	402.54	12.13
EX 203	EX 204	18	23.08	6.02	672.20	670.81	675.83	675.81	692.11	689.94	696.01	692.26	21.77	28.00	15.85
EX 204	EX 589	18	11.20	3.57	670.81	670.41	675.81	676.04	689.94	686.35	692.26	689.67	44.77	21.57	12.20
EX 589	EX 287	24	57.82	3.49	670.41	668.39	676.04	674.62	686.35	682.38	689.67	685.94	44.77	45.93	14.62
205	EX 205A	18	10.57	3.31	662.82	662.47	665.12	665.30	683.96	679.48	686.10	683.29	32.81	20.76	11.75
EX 209	EX MH	15	34.38	0.23	654.92	654.84	657.75	657.81	685.27	683.99	685.38	684.58	8.33	3.38	2.76
EX MH	EX 208	15	33.33	1.17	654.84	654.45	657.81	657.53	683.99	683.81	684.58	683.93	8.33	7.59	6.19
EX 208	EX 207	24	15.37	0.13	654.82	654.80	657.53	657.30	683.81	679.18	683.93	681.21	25.74	8.86	2.82
EX 207	EX 590	24	17.81	2.13	654.80	654.42	657.30	658.40	679.18	675.92	681.21	679.96	27.38	35.89	11.42
206	EX 206A	18	54.51	0.90	654.49	654.00	656.42	655.67	679.16	673.45	679.74	677.49	7.04	10.82	6.12
EX 206A	0	42	50.84	2.02	652.68	651.65	655.67	0.00	673.45	0.00	677.49	0.00	124.35	155.17	16.13
210	EX 210A	15	11.71	2.22	653.26	653.00	655.94	655.74	678.36	670.75	679.49	674.79	33.31	10.46	8.52
222	EX 222A	15	7.42	7.80	645.85	645.27	649.00	648.88	666.86	661.49	670.82	665.53	46.33	19.60	15.97
223	EX 223A	15	4.52	6.19	640.78	640.50	644.81	644.50	650.44	644.51	653.58	648.54	57.07	17.46	14.23
EX 60" RCP	212	60	464.83	1.43	643.76	637.12	648.76	645.35	648.78	641.95	653.39	646.55	134.91	338.13	17.22
212	EX 211A	60	87.72	1.43	637.12	635.87	645.35	644.96	641.95	642.88	646.55	645.16	142.51	338.11	17.22
213	EX 275	18	31.64	3.41	638.62	637.54	641.90	642.37	644.05	641.78	646.26	644.32	16.34	21.08	11.93
214	EX 275	18	28.56	3.92	637.91	636.79	641.59	642.37	643.34	641.78	645.88	644.32	11.21	22.60	12.79
EX 275	EX 275A	24	66.97	2.67	636.79	635.00	642.37	642.14	641.78	640.02	644.32	642.31	27.55	40.17	12.79
272	EX 272A	18	10.13	12.15	637.23	636.00	640.02	639.83	634.89	638.38	642.75	640.68	43.55	39.77	22.50
EX 858	EX 857	36	148.77	0.56	635.56	634.72	638.24	640.60	645.86	628.61	646.78	640.45	37.07	54.44	7.70
EX 857	EX 857A	36	9.92	7.26	634.72	634.00	640.60	639.37	628.61	637.55	640.45	639.83	37.07	195.20	27.61
EX 66" RCP	EX 216A	66	136.88	1.73	633.97	631.60	639.47	638.82	642.59	638.15	648.93	644.46	353.90	479.99	20.20
EX 216A	EX 217A	66	81.26	1.72	631.60	630.20	638.82	638.97	638.15	634.07	644.46	640.38	384.63	478.79	20.15
EX 217A	EX 271A	66	149.76	1.72	630.20	627.62	638.97	639.67	634.07	630.69	640.38	635.52	462.83	478.78	20.15
216	EX 216A	21	14.34	3.97	636.57	636.00	639.45	638.82	644.93	638.15	648.09	644.46	30.73	34.31	14.26
217	EX 217A	21	10.67	5.53	635.59	635.00	639.67	638.97	641.37	634.07	645.76	640.38	78.20	40.47	16.82
218	219	15	41.61	1.13	639.65	639.18	642.43	642.48	666.54	660.84	667.11	661.88	21.44	7.46	6.08
219	EX 271A	15	153.06	2.06	639.18	636.03	642.48	639.67	660.84	630.69	661.88	635.52	27.67	10.06	8.20

SUMMARY OF PIPE DESIGN

START NODE STR. NO.	END NODE STR. NO.	DIAM	LENGTH	SLOPE	INV UP	INV DN	T/G UP	T/G DN	HGL UP	HGL DN	EGL UP	EGL DN	Q100	QCAPACITY	VELOCITY
		INCH	LF	%	FT	FT	FT	FT	FT	FT	FT	FT	CFS	CFS	FPS
36TH STREET SOUTH (EAST)															
101A	101	18	9.06	7.40	648.19	647.52	650.19	650.58	637.03	639.02	641.82	640.73	17.46	31.03	17.56
101	102	24	317.30	1.80	647.02	641.31	650.58	646.22	639.02	635.20	640.73	637.50	19.72	32.96	10.49
102	103	30	261.60	1.80	640.81	636.10	646.22	641.51	635.20	631.12	637.50	634.05	38.53	59.78	12.18
103	104	36	292.90	1.80	635.60	630.34	641.51	635.75	631.12	629.19	634.05	631.48	50.14	97.09	13.74
104	105	36	274.20	1.40	630.14	626.30	635.75	630.60	629.19	628.00	631.48	629.00	61.08	85.74	12.13
105	OFFSITE	42	140.00	0.50	625.70	625.00	630.60	OFFSITE	628.00	OFFSITE	629.00	OFFSITE	65.05	77.28	8.03
101B	101	18	32.07	2.21	648.23	647.52	650.23	650.58	640.18	639.02	641.62	640.73	2.26	16.98	9.61
102A	102	18	13.27	4.97	643.97	643.31	645.97	646.22	635.74	635.20	638.96	637.50	16.74	25.45	14.40
102B	102	18	32.05	1.78	643.88	643.31	645.88	646.22	637.53	635.20	638.69	637.50	2.08	15.22	8.61
103A	103	18	14.89	8.87	639.42	638.10	641.42	641.51	629.90	631.12	635.64	634.05	9.41	33.97	19.22
103B	103	18	32.03	3.34	639.17	638.10	641.17	641.51	633.39	631.12	635.55	634.05	2.19	20.86	11.80
104A	104	18	14.38	6.68	633.60	632.64	635.60	635.75	628.35	629.19	632.67	631.48	5.23	29.48	16.68
104B	104	18	32.05	2.40	633.41	632.64	635.41	635.75	631.17	629.19	632.72	631.48	5.72	17.69	10.01
105A	105	18	10.03	3.09	628.21	627.90	630.21	630.60	627.53	628.00	629.53	629.00	3.97	20.06	11.35
106	107	18	23.21	0.50	628.25	628.13	630.25	631.60	629.28	628.00	629.61	629.00	6.91	8.07	4.56
107	108	18	20.70	0.50	628.03	627.93	631.60	630.93	628.00	628.97	629.00	629.27	6.91	8.09	4.58
108	OFFSITE	18	144.03	0.46	627.90	627.24	630.93	OFFSITE	628.97	OFFSITE	629.27	OFFSITE	6.91	7.72	4.37

LICENSED PROFESSIONAL ENGINEER
JASON P. DICKMAN
27639
OKLAHOMA
07/19/2020

REVISION	BY	DATE

SUMMARY OF PIPE DESIGN

PROJECT NO. 144200

ARTERIAL STREET REHABILITATION AND WATERLINE REPLACEMENT – 36TH ST. N. – MLK BLVD TO PEORIA AVE.

CITY OF TULSA, OKLAHOMA
ENGINEERING SERVICES DEPARTMENT

PLANS AND ESTIMATES PREPARED BY:

PEC PROFESSIONAL ENGINEERING CONSULTANTS, P.A.
1924 S. UTICA AVE., SUITE 1400
TULSA, OK 74104 918-664-5400 www.pec1.com

DRAWN	BFS	01/2020	APPROVED:
DESIGNED	JPD	01/2020	
SURVEY			
PROJ. MGR.		07/2020	
LEAD ENGR.		9.20	
FIELD MGR.		8/20	
RECOMMENDED: DESIGN MANAGER		9.20	CITY ENGINEER

FILE: DRAWING: DATE: 10/30/20

ATLAS PAGE NO: 218, 219, 281, 282 SHEET 27 OF 165 SHEETS

DGN#: XXX PLOTTED BY: $USER$ SCALE: $SCALE$ $DATE$ $TIME$
$FILE$

SUMMARY OF DRAINAGE STRUCTURES

STR NO.	ROADWAY	STATION	SIDE	O/S (FT)	NORTHING	EASTING	[2] TOP ELEV. (FT)	TOP CURB ELEV. (FT)	TOP RING & COVER ELEV. (FT)	FL OUT ELEV. (FT)	INNER STRUC. HEIGHT (FT)	[4] ADDTL DEPTH IN INLET DES. 2 (VF)	[4] ADDTL DEPTH IN INLET DES. 4 & 5 (VF)	CONDUIT DATA IN FLOW SIZE	CONDUIT DATA IN FLOW SIZE	CONDUIT DATA IN FLOW SIZE	CONDUIT DATA OUT FLOW SIZE	4' DIA. MANHOLE COMPLETE IN PLACE (EA)	6' DIA. MANHOLE COMPLETE IN PLACE (EA)	8' DIA. MANHOLE COMPLETE IN PLACE (EA)	INLET CI DES. 2(B) (EA)	INLET CI DES. 2(C) (EA)	INLET CI DES. 2(D) (EA)	INLET CI DES. 4(STD) (EA)	INLET CI DES. 4(2A) (EA)	INLET CI DES. 4(C) (EA)	INLET CI DES. 4(D) (EA)	INLET CI DES. 4(D+A) (EA)	INLET CI DES. 5(D) (EA)	8" CAST [5] IRON HOODS (EA)	INLET [5] FRAME AND GRATE (EA)	MH [5] FRAME & COVER (EA)	RCP, 18 INCH ROUND COMP IN PLCE (LF)	RCP, 24 INCH ROUND COMP IN PLCE (LF)	RCP, 30 INCH ROUND COMP IN PLCE (LF)	RCP, 36 INCH ROUND COMP IN PLCE (LF)	RCP, 42 INCH ROUND COMP IN PLCE (LF)	RC END SECTION, 42 INCH ROUND, COMP IN PLACE (EA)
	36TH STREET NORTH (WEST)																																					
200	36th St. N.	104+52.00	RT	26.16	445,082.55	2,560,899.88	678.58	679.08		674.87	3.71						Ex. 18' (N)				1										4	2							
201	36th St. N.	104+52.00	LT	26.15	445,134.84	2,560,898.66	678.57	679.07		673.57	5.00	1.29		Ex. 18' (S)			Ex. 18' (NE)					1									5	2							
205	36th St. N.	107+81.00	LT	25.84	445,142.17	2,561,227.58	665.79	666.29		662.82	2.97						Ex. 18' (NE)										1				8	4							
206	36th St. N.	111+42.00	RT	22.24	445,102.50	2,561,589.60	657.09	657.59		654.49	2.60						Ex. 18 (NE)				1										4	2							
210	36th St. N.	112+04.00	LT	21.87	445,148.04	2,561,650.56	656.61	657.11		653.26	3.35						Ex. 15' (NE)							1							4	4							
222	36th St. N.	115+56.00	LT	21.92	445,156.27	2,562,002.46	649.67	650.17		645.85	3.82		0.11				Ex. 15' (N)											1			9	4							
223	36th St. N.	119+82.00	LT	21.91	445,166.16	2,562,428.35	645.48	645.98		640.78	4.70		0.99				Ex. 15' (E)											1			9	4							
212	36th St. N.	119+33.00	RT	22.19	445,120.94	2,562,380.39	646.02	646.52		637.12	8.90	5.19			Ex. 60' (W)		Ex. 60' (E)						1								6	2							
272	36th St. N.	125+13.45	LT	21.70	445,178.31	2,562,959.66	640.69	641.19		637.23	3.46						Ex. 18' (N)						1								6	2							
216	36th St. N.	125+72.92	RT	22.23	445,135.78	2,563,020.14	640.12	640.62		636.57	3.55						Ex. 21' (NE)								1						7	4							
217	36th St. N.	126+64.00	RT	22.30	445,137.81	2,563,111.19	640.34	640.84		635.59	4.75		1.04				Ex. 21' (N)								1						6	4							
219	36th St. N.	129+27.00	LT	21.93	445,188.15	2,563,373.09	643.15	643.65		639.18	3.97	0.26		Ex. 15' (S)			Ex. 15' (NW)				1										4	2							
218	36th St. N.	129+27.50	RT	22.37	445,143.87	2,563,374.62	643.10	643.60		639.65	3.45						Ex. 15' (N)						1								6	2							
	SUBTOTAL											6.74	2.14								3	1	3	1	1	1	1	2		78	38							
	36TH STREET NORTH (EAST)																																					
101A	36th St. N.	140+68.45	LT	22.69	445,215.44	2,564,514.22	650.86	651.53		648.19	2.67						18' (S)												1	9	5		9.06						
101B	36th St. N.	140+68.45	RT	22.69	445,170.08	2,564,515.27	650.90	651.57		648.23	2.67						18' (N)				1										4	2		32.07					
101	36th St. N.	140+68.45	LT	11.50	445,204.26	2,564,514.48		651.92	651.25	647.02	4.23			18' (N)	18' (S)		24' (E)		1													1		317.30				
102A	36th St. N.	143+71.55	LT	22.67	445,222.47	2,564,817.24	646.64	647.31		643.97	2.67						18' (SE)												1	9	5		13.27					
102B	36th St. N.	143+85.75	RT	22.67	445,177.47	2,564,832.48	646.55	647.22		643.88	2.67						18' (N)				1										4	2		32.05					
102	36th St. N.	143+85.75	LT	11.50	445,211.63	2,564,831.69		647.56	646.89	640.81	6.08			18' (NW)	18' (S)	24' (W)	30' (E)		1													1		261.60				
103A	36th St. N.	146+33.04	LT	22.66	445,228.54	2,565,078.66	642.09	642.76		639.42	2.67						18' (SE)										1				8	4		14.89					
103B	36th St. N.	146+47.35	RT	22.64	445,183.58	2,565,094.02	641.84	642.51		639.17	2.67						18' (N)						1								6	2		32.03					
103	36th St. N.	146+47.35	LT	11.51	445,217.72	2,565,093.22		642.85	642.18	635.60	6.58			18' (NW)	18' (S)	30' (W)	36' (E)			1													1		292.90				
104A	36th St. N.	149+26.60	LT	22.67	445,235.37	2,565,372.14	636.27	636.94		633.60	2.67						18' (SE)										1				8	4		14.38					
104B	36th St. N.	149+40.25	RT	22.67	445,190.37	2,565,386.83	636.08	636.75		633.41	2.67						18' (N)										1				8	4		32.05					
104	36th St. N.	149+40.25	LT	11.50	445,224.52	2,565,386.04		637.09	636.42	630.14	6.28			18' (NW)	18' (S)	36' (W)	36' (E)			1													1		274.20				
106	36th St. N.	152+09.85	RT	22.67	445,196.63	2,565,656.37	630.92	631.59		628.25	2.67						18' (S)						1								6	2		23.21					
105A	36th St. N.	152+10.12	LT	22.66	445,241.96	2,565,655.58	630.88	631.55		628.21	2.67						18' (SE)						1								6	2		10.03					
107	36th St. N.	152+11.46	RT	45.78	445,173.56	2,565,658.51		632.94	632.27	628.03	4.24						18' (SE)	1														1		20.70					
105	36th St. N.	152+14.44	LT	11.50	445,230.90	2,565,660.16		631.94	631.27	625.70	5.57			18' (NW)		36' (W)	42' (NE)			1													1			140.00	1		
108	36th St. N.	152+31.17	RT	52.11	445,167.69	2,565,678.36		632.27	631.60	627.90	3.70						Ex. 18' (S)	1														1							
	SUBTOTAL																	2	2	3	2		3				3		2	68	32	7	233.74	317.30	261.60	567.09	140.00	1
	TOTAL											6.74	2.14					2	2	3	5	1	6	1	1	1	4	2	2	146	70	7	233.74	317.30	261.60	567.09	140.00	1

NOTES:
1 STATION AND OFFSET IS TO THE CENTERLINE OF THE STRUCTURE AT THE FLOWLINE OF CURB.
2 ELEVATION REFERENCED IS THE TOP OF GRATE, TOP OF MANHOLE RING AND LID AT THE CENTERLINE OF THE STRUCTURE.
3 STRUCTURE DEPTH IS MEASURED FROM THE TOP ELEVATION TO FLOWLINE OUT.
4 ADDITIONAL DEPTH IS MEASURED STRUCTURE DEPTH WHICH EXCEEDS 3.71 FEET FOR INLETS
5 FOR INFORMATION ONLY. COST OF HOODS, FRAMES, COVERS AND GRATES TO BE INCLUDED IN THE COST OF INLET.

DESIGN

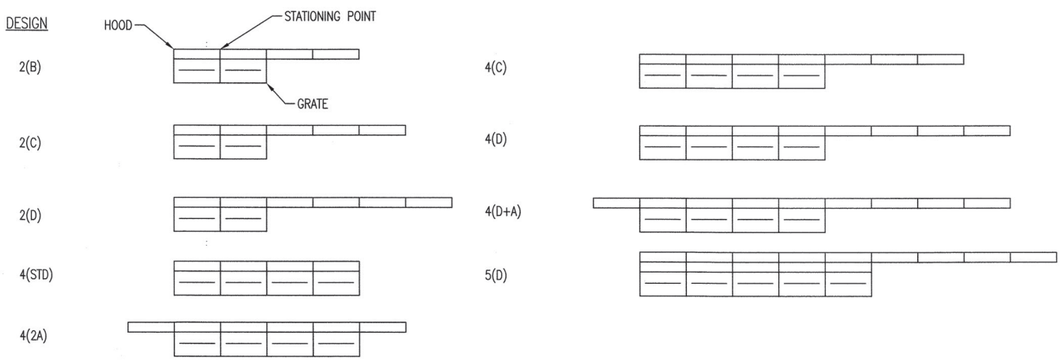

07/19/2020

REVISION	BY	DATE

SUM. OF DRAINAGE STRUCTURES AND CONDUIT
PROJECT NO. 144200
ARTERIAL STREET REHABILITATION AND WATERLINE REPLACEMENT – 36TH ST. N. – MLK BLVD TO PEORIA AVE.

CITY OF TULSA, OKLAHOMA
ENGINEERING SERVICES DEPARTMENT

PLANS AND ESTIMATES PREPARED BY: PEC PROFESSIONAL ENGINEERING CONSULTANTS, P.A. 1924 S. UTICA AVE., SUITE 1400 TULSA, OK 74104 918-664-5400 www.pec1.com

DRAWN	BFS	01/2020	APPROVED:
DESIGNED	JPD	01/2020	
SURVEY			
PROJ. MGR.		07/2020	
LEAD ENGR.		7/20	
FIELD MGR.		8/20	
RECOMMENDED: DESIGN MANAGER	HAJ	9.20	CITY ENGINEER

FILE: DRAWING: DATE: 10/30/20
ATLAS PAGE NO: 218, 219, 281, 282 SHEET 28 OF 165 SHEETS

$TIME$ $DATE$ $SCALE$ SCALE: $USCR$ PLOTTED BY: DSWG: XXX $FILE$

STORM WATER MANAGEMENT PLAN

SITE DESCRIPTION

PROJECT LIMITS: S 1/2 Sec. 13, T-20-N, R-12-E, City of Tulsa, Tulsa County, Oklahoma.
N 1/2 Sec. 24, T-20-N, R-12-E, City of Tulsa, Tulsa County, Oklahoma.

PROJECT DESCRIPTION: Arterial Street Rehabilitation and Waterline Replacement
36th Street North – MKL Jr. Blvd to Peoria Ave

SUGGESTED SEQUENCE OF EROSION CONTROL ACTIVITIES:

1. Temporary erosion control
2. Driveway and Sidewalk Improvements
3. Installation of storm sewer improvements
4. Pavement rehabilitation
5. Install permanent sodding and seeding

SOIL TYPE: Silty Sand with Lean and Fat Clay

AREA TO BE DISTURBED: APPROX. 5.1 ACRES

OFFSITE AREA TO BE DISTURBED: _____
(FOR CONTRACTOR USE)

MAXIMUM ACRES TO BE DISTURBED AT ANY ONE TIME: _____
(FOR CONTRACTOR USE)

LATITUDE & LONGITUDE OF CENTER OF PROJECT: Lat: 36° 12' 21" N Long: 95° 59' 04" W

NAME OF RECEIVING WATERS: Flat Rock Creek

SENSITIVE WATERS OR WATERSHEDS: YES ☐ NO ☒

303(d) IMPAIRED WATERS: YES ☐ NO ☒

NOTE:
THIS SHEET SHOULD BE USED IN CONJUNCTION WITH A DRAINAGE MAP THAT ILLUSTRATES THE DRAINAGE PATTERNS/PATHWAYS AND RECEIVING WATERS FOR THIS PROJECT. THIS SHEET SHOULD ALSO BE USED WITH THE EROSION CONTROL SUMMARIES, PAY ITEMS, & NOTES.

EROSION AND SEDIMENT CONTROLS

SOIL STABILIZATION PRACTICES:

- ____ TEMPORARY SEEDING
- _X_ PERMANENT SODDING, SPRIGGING OR SEEDING
- ____ VEGETATIVE MULCHING
- ____ SOIL RETENTION BLANKET
- _X_ PRESERVATION OF EXISTING VEGETATION

NOTE: TEMPORARY EROSION CONTROL METHODS MUST BE USED ON ALL DISTURBED AREAS WHERE CONSTRUCTION ACTIVITIES HAVE CEASED FOR OVER 14 DAYS. METHODS USED WILL BE AS SHOWN ON PLANS, OR AS DIRECTED BY THE ENGINEER.

STRUCTURAL PRACTICES:

- ____ STABILIZED CONSTRUCTION EXIT
- _X_ TEMPORARY SILT FENCE
- ____ TEMPORARY SILT DIKES
- ____ TEMPORARY FIBER LOG
- ____ DIVERSION, INTERCEPTOR OR PERIMETER DIKES
- ____ DIVERSION, INTERCEPTOR OR PERIMETER SWALES
- ____ ROCK FILTER DAMS
- ____ TEMPORARY SLOPE DRAIN
- ____ PAVED DITCH W/ DITCH LINER PROTECTION
- ____ TEMPORARY DIVERSION CHANNELS
- ____ TEMPORARY SEDIMENT BASINS
- ____ TEMPORARY SEDIMENT TRAPS
- _X_ TEMPORARY SEDIMENT FILTERS
- _X_ TEMPORARY SEDIMENT REMOVAL
- ____ RIP RAP
- ____ INLET SEDIMENT FILTER
- ____ TEMPORARY BRUSH SEDIMENT BARRIERS
- ____ SANDBAG BERMS
- ____ TEMPORARY STREAM CROSSINGS

OFFSITE VEHICLE TRACKING:

- ____ HAUL ROADS DAMPENED FOR DUST CONTROL
- ____ LOADED HAUL TRUCKS TO BE COVERED WITH TARPAULIN
- _X_ EXCESS DIRT ON ROAD REMOVED DAILY

NOTES:

THE CONTRACTOR SHALL ALSO BE RESPONSIBLE FOR THE FOLLOWING:

MAINTENANCE AND INSPECTION:

ALL EROSION AND SEDIMENT CONTROLS WILL BE MAINTAINED IN GOOD WORKING ORDER FROM THE BEGINNING OF CONSTRUCTION UNTIL AN ACCEPTABLE VEGETATIVE COVER IS ESTABLISHED. INSPECTION BY THE CONTRACTOR AND ANY NECESSARY REPAIRS SHALL BE PERFORMED ONCE EVERY 7 CALENDAR DAYS AND WITHIN 24 HOURS AFTER ANY STORM EVENT GREATER THAN 0.5 INCH AS RECORDED BY A NON-FREEZING RAIN GAUGE TO BE LOCATED ON SITE. POTENTIALLY ERODIBLE AREAS, DRAINAGEWAYS, MATERIAL STORAGE, STRUCTURAL DEVICES, CONSTRUCTION ENTRANCES AND EXITS ALONG WITH EROSION AND SEDIMENT CONTROL LOCATIONS ARE EXAMPLES OF SITES THAT NEED TO BE INSPECTED.

WASTE MATERIALS:

PROPER MANAGEMENT AND DISPOSAL OF CONSTRUCTION WASTE MATERIAL IS REQUIRED BY THE CONTRACTOR. MATERIALS INCLUDE STOCKPILES, SURPLUS, DEBRIS AND ALL OTHER BY-PRODUCTS FROM THE CONSTRUCTION PROCESS. PRACTICES INCLUDE DISPOSAL, PROPER MATERIALS HANDLING, SPILL PREVENTION AND CLEANUP MEASURES. CONTROLS AND PRACTICES SHALL MEET THE REQUIREMENTS OF ALL FEDERAL, STATE AND LOCAL AGENCIES.

HAZARDOUS MATERIALS:

PROPER MANAGEMENT AND DISPOSAL OF HAZARDOUS WASTE MATERIALS IS REQUIRED. THE CONTRACTOR IS RESPONSIBLE FOR FOLLOWING MANUFACTURER'S RECOMMENDATIONS, STATE AND FEDERAL REGULATIONS TO ENSURE CORRECT HANDLING, DISPOSAL, SPILL PREVENTION AND CLEANUP MEASURES. EXAMPLES INCLUDE BUT ARE NOT LIMITED TO: PAINTS, ACIDS, CLEANING SOLVENTS, CHEMICAL ADDITIVES, CONCRETE CURING COMPOUNDS AND CONTAMINATED SOILS.

GENERAL NOTES:

A STORM WATER POLLUTION PREVENTION PLAN (SWPPP) IS REQUIRED TO COMPLY WITH THE OKLAHOMA POLLUTION DISCHARGE ELIMINATION SYSTEM (OPDES) REGULATIONS. THIS PLAN IS INITIATED DURING THE DESIGN PHASE, CONFIRMED IN THE PRE-WORK MEETINGS AND AVAILABLE ON THE JOB SITE ALONG WITH COPIES OF THE NOTICE OF INTENT (NOI) FORM AND PERMIT CERTIFICATE THAT HAVE BEEN FILED WITH THE OKLAHOMA DEPARTMENT OF ENVIRONMENTAL QUALITY (ODEQ). THE PLAN MUST BE KEPT CURRENT WITH UP-TO-DATE AMENDMENTS DURING THE PROGRESSION OF THE PROJECT. ALL CONTRACTOR OFF-SITE OPERATIONS ASSOCIATED WITH THE PROJECT MUST BE DOCUMENTED IN THE SWPPP, I.E., BORROW PITS, WORK ROADS, DISPOSAL SITES, ASPHALT/CONCRETE PLANTS, ETC. THE BASIC GOAL OF STORM WATER MANAGEMENT IS TO IMPROVE WATER QUALITY BY REDUCING POLLUTANTS IN STORM WATER DISCHARGES. RUNOFF FROM CONSTRUCTION SITES HAS A POTENTIAL FOR POLLUTION DUE TO EXPOSED SOILS AND THE PRESENCE OF HAZARDOUS MATERIALS USED IN THE CONSTRUCTION PROCESS. THE PREVENTION OF SOIL EROSION, CONTAINMENT OF HAZARDOUS MATERIALS AND/OR THE INTERCEPTION OF THESE POLLUTANTS BEFORE LEAVING THE CONSTRUCTION SITE ARE THE BEST PRACTICES FOR CONTROLLING STORM WATER POLLUTION.

THE FOLLOWING SECTIONS OF THE 2019 ODOT STANDARD SPECIFICATIONS SHOULD BE NOTED:

103.05 BONDING REQUIREMENTS
104.10 FINAL CLEANING UP
104.12 CONTRACTOR'S RESPONSIBILITY FOR WORK
104.13 ENVIRONMENTAL PROTECTION
106.08 STORAGE AND HANDLING OF MATERIAL
107.01 LAWS, RULES AND REGULATIONS TO BE OBSERVED
107.20 STORM WATER MANAGEMENT
220 MANAGEMENT OF EROSION, SEDIMENTATION AND STORM WATER POLLUTION PREVENTION AND CONTROL
221 TEMPORARY SEDIMENT CONTROL

IN ADDITION:

"ODEQ GENERAL PERMIT (OKR10) FOR STORM WATER DISCHARGES FROM CONSTRUCTION ACTIVITIES WITHIN THE STATE OF OKLAHOMA." ODEQ, WATER QUALITY DIVISION, OCTOBER 17, 2022.

JASON P. DICKMAN 27639 LICENSED PROFESSIONAL ENGINEER OKLAHOMA
07/19/2020

REVISION	BY	DATE

STORM WATER MANAGEMENT PLAN
PROJECT NO. 144200
ARTERIAL STREET REHABILITATION AND WATERLINE REPLACEMENT – 36TH ST. N. – MLK BLVD TO PEORIA AVE.
CITY OF TULSA, OKLAHOMA
ENGINEERING SERVICES DEPARTMENT

PLANS AND ESTIMATES PREPARED BY: PEC PROFESSIONAL ENGINEERING CONSULTANTS, P.A. 1924 S. UTICA AVE., SUITE 1400 TULSA, OK 74104 918-664-5400 www.pec1.com

DRAWN	BFS	01/2020	APPROVED:
DESIGNED	JPD	01/2020	
SURVEY			
PROJ. MGR.	JW	07/20	
LEAD ENGR.	BFS	7/20	
FIELD MGR.	JWW	8/20	
RECOMMENDED: DESIGN MANAGER	HAS	9.20	CITY ENGINEER
FILE:	DRAWING:		DATE: 10/30/20
ATLAS PAGE NO: 218, 219, 281, 282			SHEET 29 OF 165 SHEETS

$TIME$ $DATE$ $SCALE$ SCALE: $USER$ PLOTTED BY: XXX DSNR: $FILE$

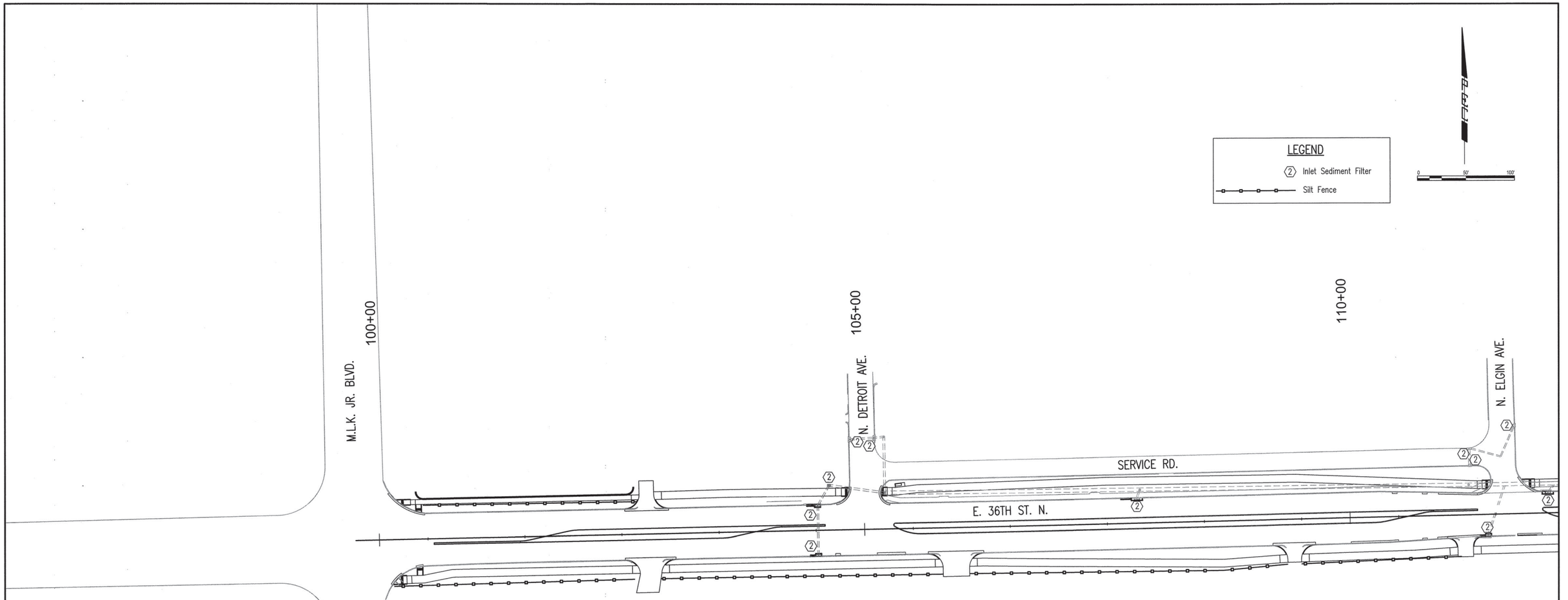

DSN#: XXX PLOTTED BY: #USER# SCALE: #SCALE# #DATE# #TIME# #FILE#

LICENSED PROFESSIONAL ENGINEER
JASON P. DICKMAN
27639
OKLAHOMA
07/19/2020

EROSION CONTROL PLAN 1

PROJECT NO. 144200

ARTERIAL STREET REHABILITATION AND WATERLINE REPLACEMENT – 36TH ST. N. – MLK BLVD TO PEORIA AVE.

CITY OF TULSA, OKLAHOMA
ENGINEERING SERVICES DEPARTMENT

PLANS AND ESTIMATES PREPARED BY:

PEC PROFESSIONAL ENGINEERING CONSULTANTS, P.A.
1924 S. UTICA AVE., SUITE 1400
TULSA, OK 74104 918-664-5400 www.pec1.com

REVISION	BY	DATE

PLAN SCALE: 1" = 50'	DRAWN	BFS	01/2020
	DESIGNED	JPD	01/2020
	SURVEY		
PROFILE SCALE:	PROJ. MGR.		03/20
HORIZONTAL: 1" =	LEAD ENGR.		
	FIELD MGR.		
VERTICAL 1" =	RECOMMENDED: DESIGN MANAGER		9-20

APPROVED: CITY ENGINEER

FILE: DRAWING: DATE: 10/20/20

ATLAS PAGE NO: 218, 219, 281, 282 SHEET 30 OF 165 SHEETS

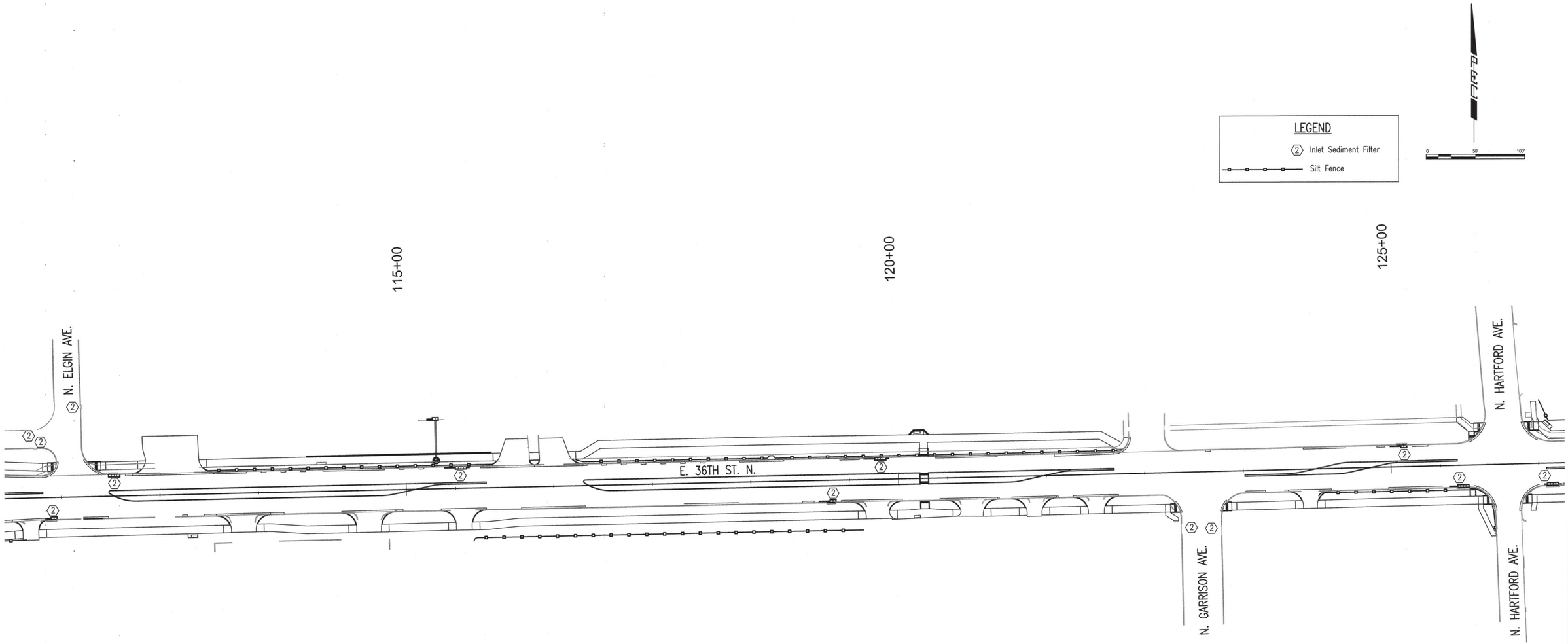

LICENSED PROFESSIONAL ENGINEER
JASON P. DICKMAN 27639
OKLAHOMA
07/19/2020

REVISION	BY	DATE

EROSION CONTROL PLAN 2

PROJECT NO. 144200

ARTERIAL STREET REHABILITATION AND WATERLINE REPLACEMENT – 36TH ST. N. – MLK BLVD TO PEORIA AVE.

CITY OF TULSA, OKLAHOMA
ENGINEERING SERVICES DEPARTMENT

PLANS AND ESTIMATES PREPARED BY: PEC PROFESSIONAL ENGINEERING CONSULTANTS, P.A. 1924 S. UTICA AVE., SUITE 1400 TULSA, OK 74104 918-664-5400 www.pec1.com

PLAN SCALE: 1" = 50'	DRAWN	BFS	01/2020	APPROVED:
	DESIGNED	JPD	01/2020	
	SURVEY			
PROFILE SCALE:	PROJ. MGR.	JPD	07/2020	
HORIZONTAL: 1" =	LEAD ENGR.	BFS	7/20	
	FIELD MGR.	BFS	8/20	
VERTICAL 1" =	RECOMMENDED: DESIGN MANAGER	HAS	9.20	CITY ENGINEER
FILE:	DRAWING:			DATE: 10/30/20
ATLAS PAGE NO: 218, 219, 281, 282				SHEET 31 OF 165 SHEETS

DGN: XXX PLOTTED BY: $USER$ SCALE: $SCALE$ $DATE$ $TIME$
$FILE$

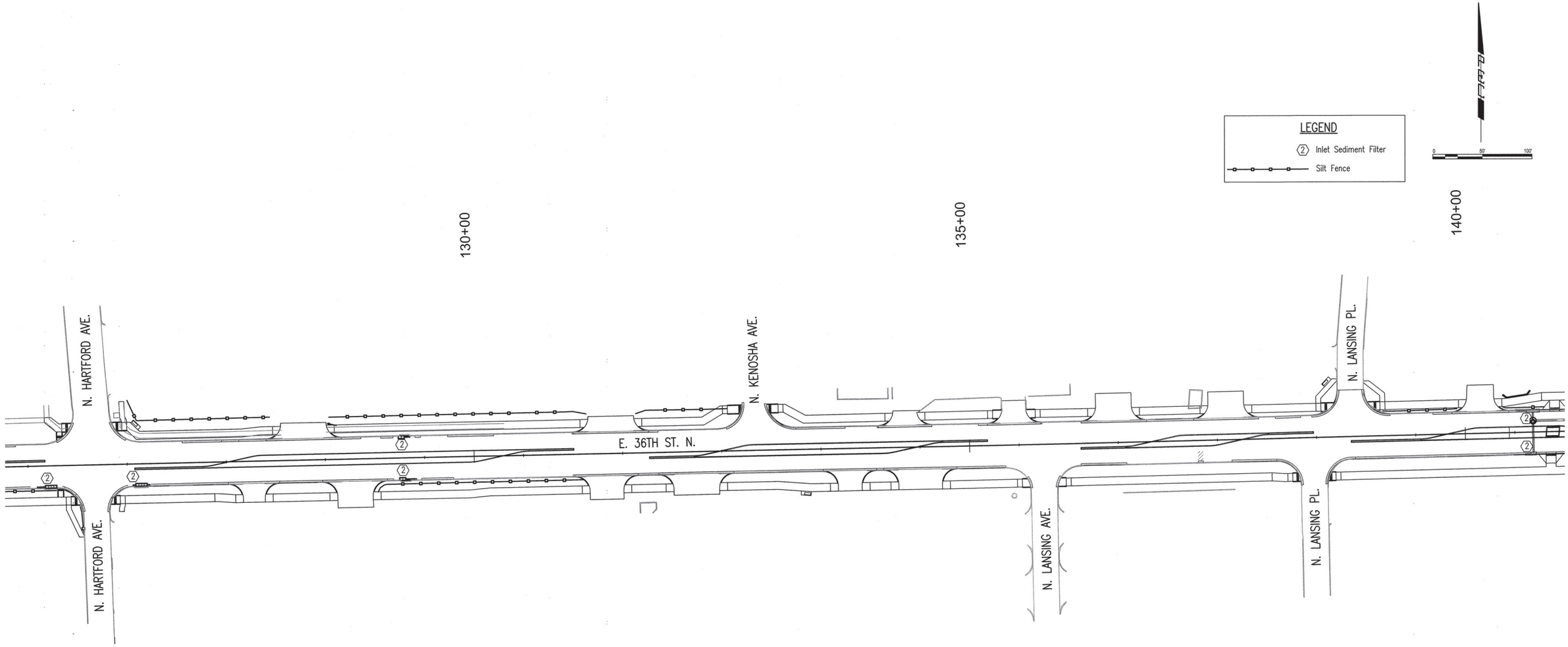

LICENSED PROFESSIONAL ENGINEER
JASON P. DICKMAN
27639
OKLAHOMA
07/19/2020

REVISION	BY	DATE

EROSION CONTROL PLAN 3

PROJECT NO. 144200

ARTERIAL STREET REHABILITATION AND WATERLINE REPLACEMENT – 36TH ST. N. – MLK BLVD TO PEORIA AVE.

CITY OF TULSA, OKLAHOMA
ENGINEERING SERVICES DEPARTMENT

PLANS AND ESTIMATES PREPARED BY: PEC PROFESSIONAL ENGINEERING CONSULTANTS, P.A. 1924 S. UTICA AVE., SUITE 1400 TULSA, OK 74104 918-664-5400 www.pec1.com

PLAN SCALE: 1" = 50'	DRAWN	BFS	01/2020	APPROVED:
	DESIGNED	JPD	01/2020	
	SURVEY			
PROFILE SCALE:	PROJ. MGR.	[illegible]	07/[illegible]	
HORIZONTAL: 1" =	LEAD ENGR.	[illegible]	7/20	
	FIELD MGR.	[illegible]	8/20	
VERTICAL 1" =	RECOMMENDED: DESIGN MANAGER	HAS	9.20	CITY ENGINEER
FILE:	DRAWING:			DATE: 10/30/20
ATLAS PAGE NO: 218, 219, 281, 282				SHEET 32 OF 165 SHEETS

DSNR: XXX PLOTTED BY: $USER$ SCALE: $SCALE$ $DATE$ $TIME$
$FILE$

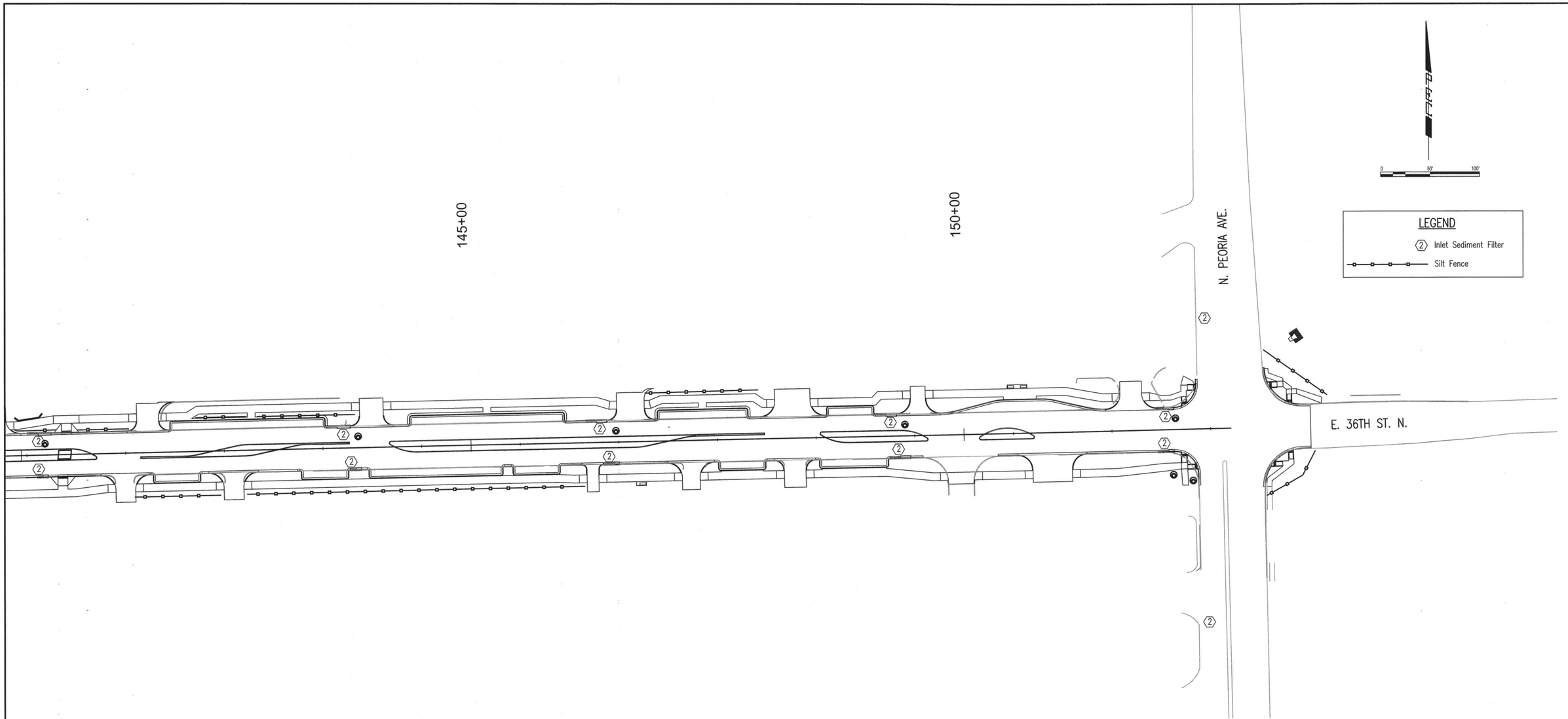

LICENSED PROFESSIONAL ENGINEER
JASON P. DICKMAN
27639
OKLAHOMA
07/19/2020

REVISION	BY	DATE

EROSION CONTROL PLAN 4

PROJECT NO. 144200

ARTERIAL STREET REHABILITATION AND WATERLINE REPLACEMENT – 36TH ST. N. – MLK BLVD TO PEORIA AVE.

CITY OF TULSA, OKLAHOMA
ENGINEERING SERVICES DEPARTMENT

PLANS AND ESTIMATES PREPARED BY: PEC — PROFESSIONAL ENGINEERING CONSULTANTS, P.A. 1924 S. UTICA AVE., SUITE 1400 TULSA, OK 74104 918-664-5400 www.pec1.com

PLAN SCALE: 1" = 50'	DRAWN	BFS	01/2020	APPROVED:
	DESIGNED	JPD	01/2020	
	SURVEY			
PROFILE SCALE:	PROJ. MGR.	[illegible]	[illegible]	
HORIZONTAL: 1" =	LEAD ENGR.	[illegible]	9.30	
	FIELD MGR.	[illegible]	8/20	
VERTICAL 1" =	RECOMMENDED: DESIGN MANAGER	HAS	9.30	CITY ENGINEER
FILE:	DRAWING:			DATE: 10/30/20
ATLAS PAGE NO: 218, 219, 281, 282				SHEET 33 OF 165 SHEETS

DSNR: XXX PLOTTED BY: $USER$ SCALE: $SCALE$ $DATE$ $TIME$
$FILE$

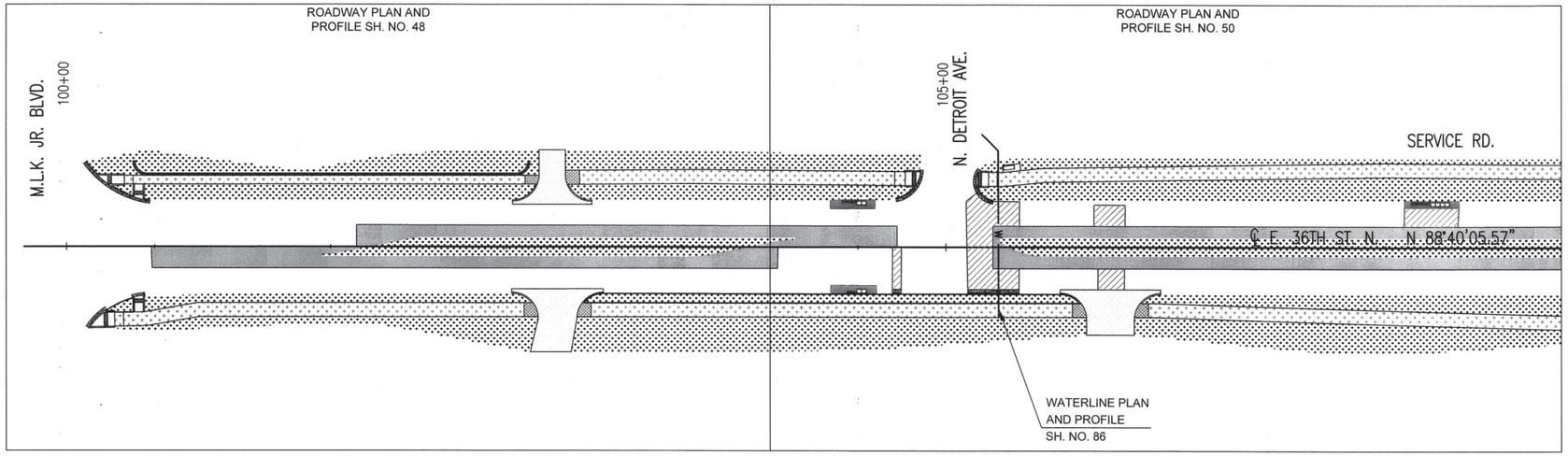

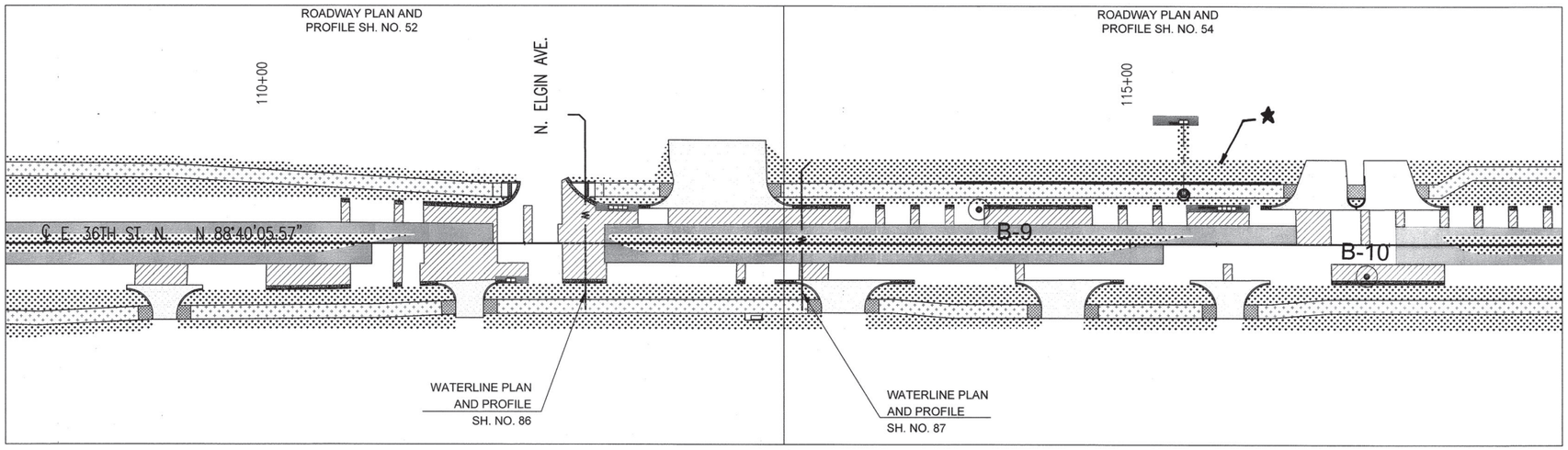

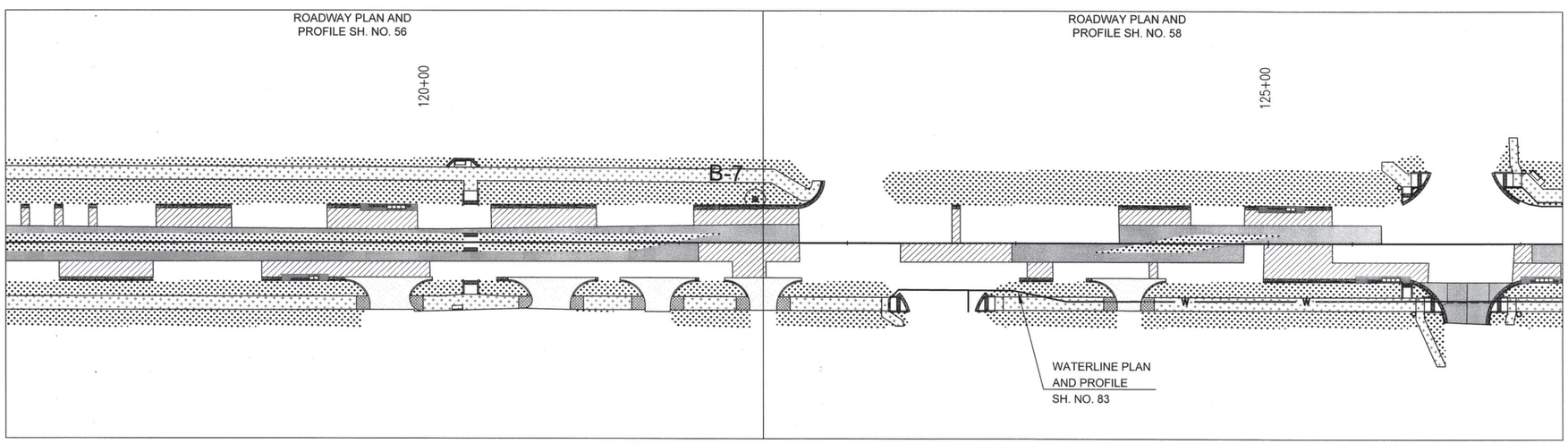



LEGEND

- PCC PANEL REPLACEMENT
- CONSTRUCT PCC CURB
- CONSTRUCT PCC DRIVEWAY
- CONSTRUCT PCC SIDEWALK
- CONSTRUCT INLET APRON
- FULL DEPTH PCC PAVEMENT
- B–X BORING LOCATION
- ★ SOD

JASON P. DICKMAN 27639 LICENSED PROFESSIONAL ENGINEER OKLAHOMA

07/19/2020

REVISION	BY	DATE

STREET REPAIR KEYMAP

PROJECT NO. 144200

ARTERIAL STREET REHABILITATION AND WATERLINE REPLACEMENT – 36TH ST. N. – MLK BLVD TO PEORIA AVE.

CITY OF TULSA, OKLAHOMA
ENGINEERING SERVICES DEPARTMENT

PLANS AND ESTIMATES PREPARED BY: PEC PROFESSIONAL ENGINEERING CONSULTANTS, P.A. 1924 S. UTICA AVE., SUITE 1400 TULSA, OK 74104 918-664-5400 www.pec1.com

PLAN SCALE: 1" =	DRAWN	BFS	01/2020	APPROVED:
	DESIGNED	JPD	01/2020	
	SURVEY			
PROFILE SCALE:	PROJ. MGR.			
HORIZONTAL: 1" =	LEAD ENGR.		7/20	
	FIELD MGR.		8/20	
VERTICAL 1" =	RECOMMENDED: DESIGN MANAGER		9.20	CITY ENGINEER
FILE:	DRAWING:			DATE: 10/20/20
ATLAS PAGE NO: 218, 219, 281, 282				SHEET 34 OF 165 SHEETS

$TIME$ $DATE$ $SCALE$ SCALE: $USER$ PLOTTED BY: XXX DGN: $FILE$

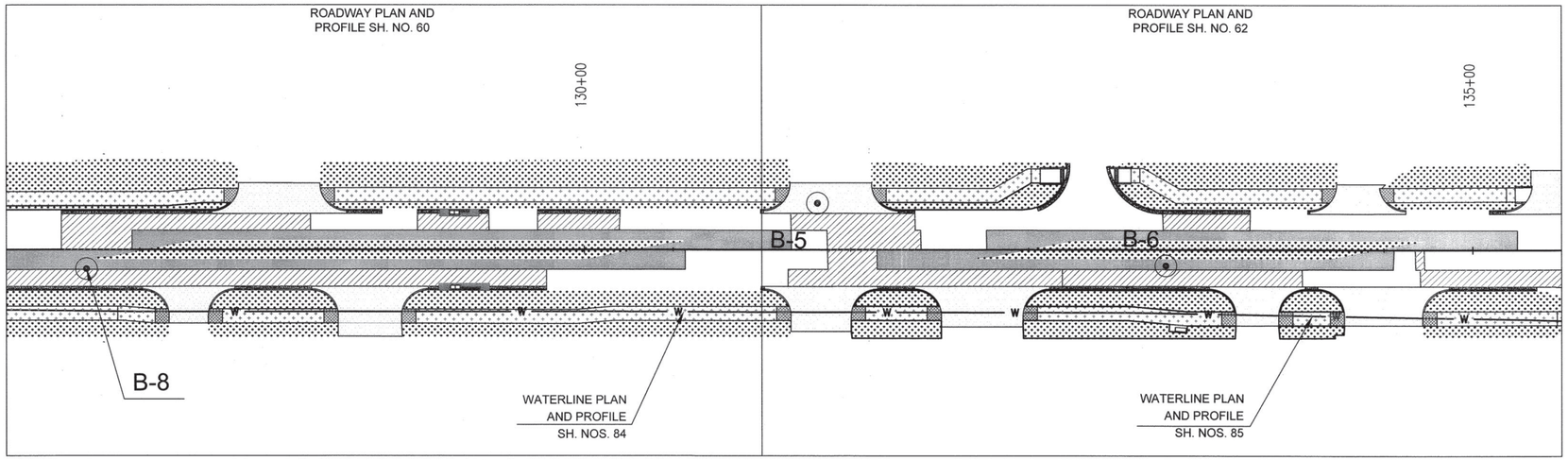

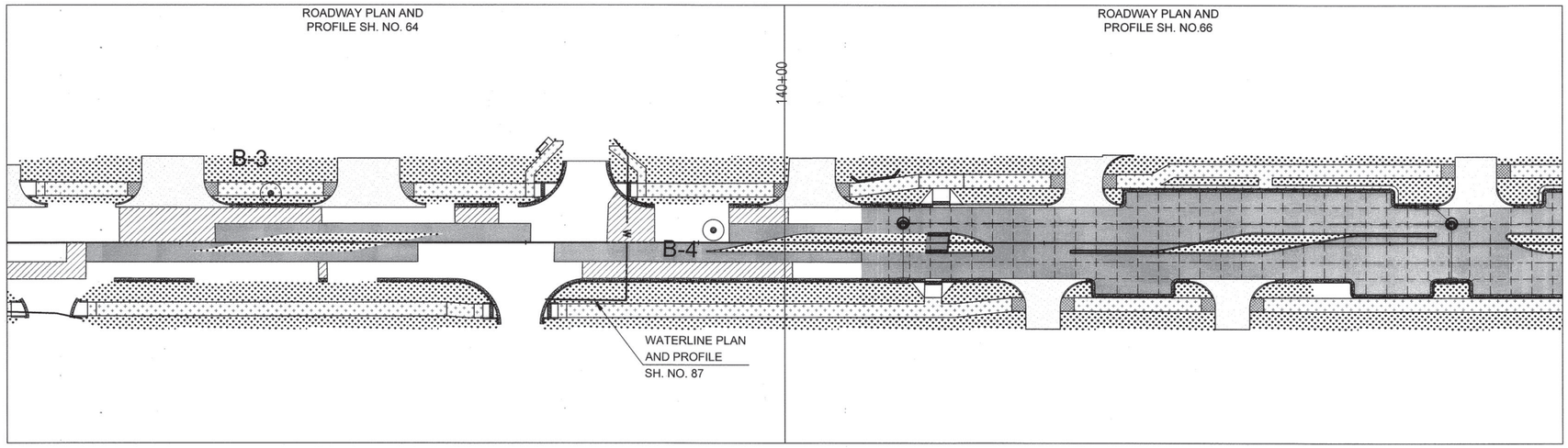

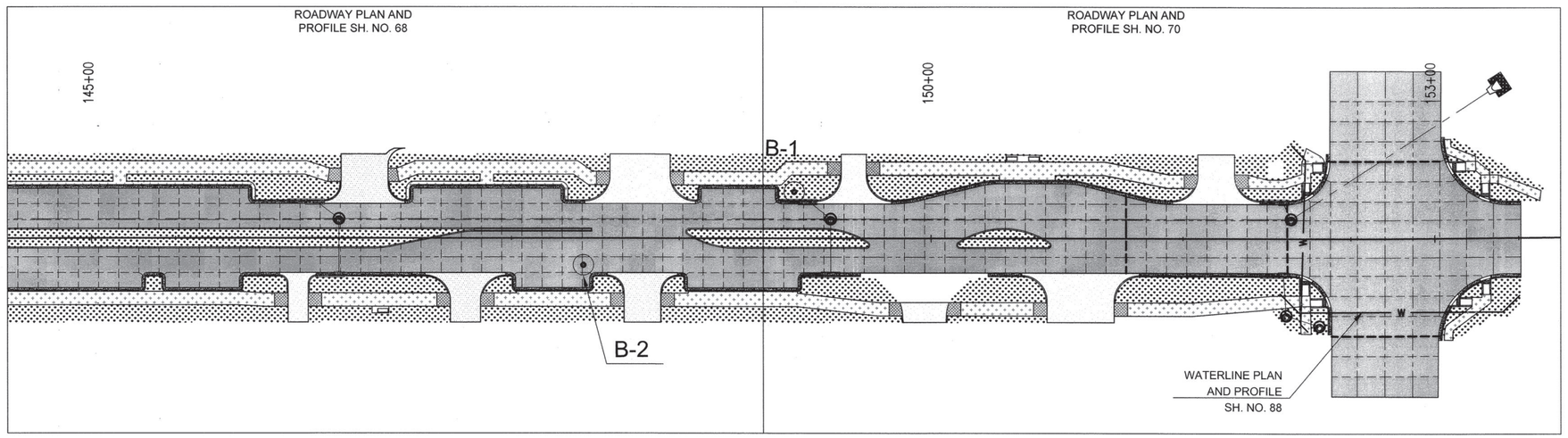

LEGEND

- PCC PANEL REPLACEMENT
- CONSTRUCT PCC CURB
- CONSTRUCT PCC DRIVEWAY
- CONSTRUCT PCC SIDEWALK
- CONSTRUCT INLET APRON
- FULL DEPTH PCC PAVEMENT
- B-X BORING LOCATION

LICENSED PROFESSIONAL ENGINEER
JASON P. DICKMAN
27639
OKLAHOMA
07/19/2020

STREET REPAIR KEYMAP (2)

PROJECT NO. 144200

ARTERIAL STREET REHABILITATION AND WATERLINE REPLACEMENT – 36TH ST. N. – MLK BLVD TO PEORIA AVE.

CITY OF TULSA, OKLAHOMA
ENGINEERING SERVICES DEPARTMENT

PLANS AND ESTIMATES PREPARED BY: PEC PROFESSIONAL ENGINEERING CONSULTANTS, P.A. 1924 S. UTICA AVE., SUITE 1400 TULSA, OK 74104 918-664-5400 www.pec1.com

REVISION	BY	DATE

PLAN SCALE: 1" =
PROFILE SCALE:
HORIZONTAL: 1" =
VERTICAL 1" =

DRAWN	BFS	01/2020
DESIGNED	JPD	01/2020
SURVEY		
PROJ. MGR.		7/20
LEAD ENGR.		7/20
FIELD MGR.		8/20
RECOMMENDED: DESIGN MANAGER		9.20

APPROVED: CITY ENGINEER

FILE: DRAWING: DATE: 10/23/20

ATLAS PAGE NO: 218, 219, 281, 282

SHEET 35 OF 165 SHEETS

DSN#: XXX PLOTTED BY: $FILE$ $USER$ SCALE: $SCALE$ $DATE$ $TIME$

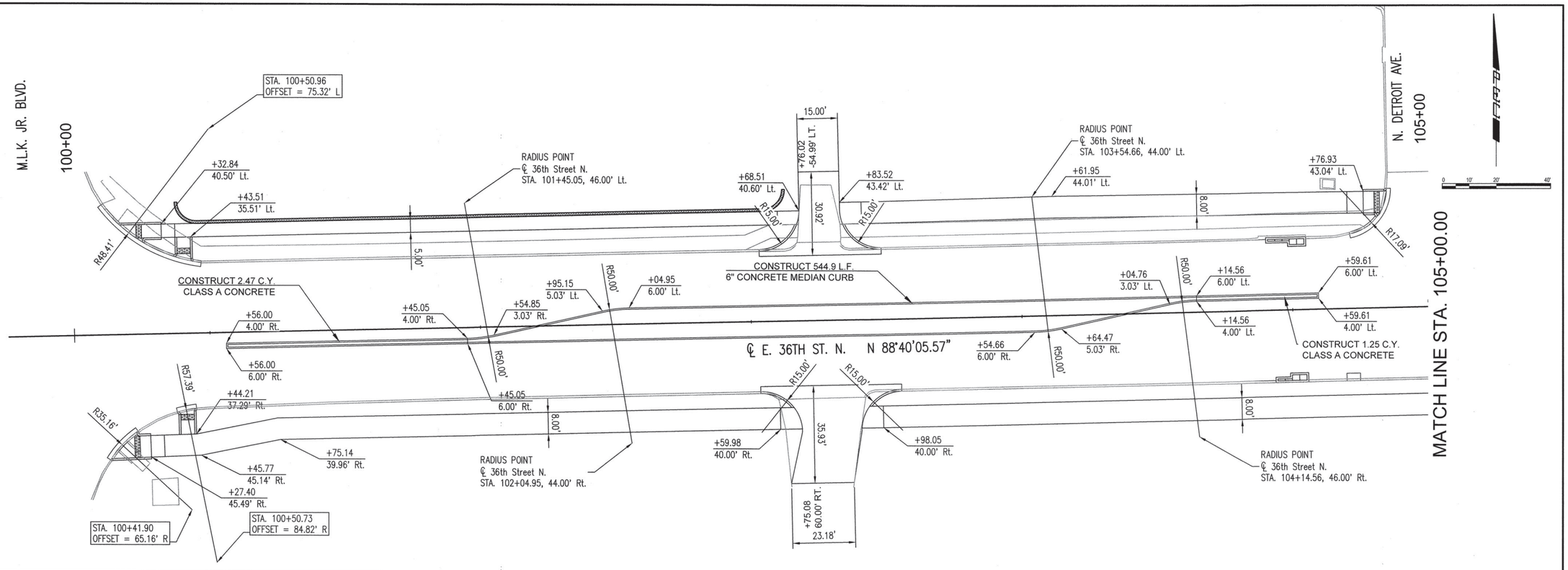

LICENSED PROFESSIONAL ENGINEER
JASON P. DICKMAN
27639
OKLAHOMA
07/19/2020

GEOMETRIC DATA 1

PROJECT NO. 144200

ARTERIAL STREET REHABILITATION AND WATERLINE REPLACEMENT – 36TH ST. N. – MLK BLVD TO PEORIA AVE.

CITY OF TULSA, OKLAHOMA
ENGINEERING SERVICES DEPARTMENT

PLANS AND ESTIMATES PREPARED BY: PEC — PROFESSIONAL ENGINEERING CONSULTANTS, P.A. 1924 S. UTICA AVE., SUITE 1400 TULSA, OK 74104 918-664-5400 www.pec1.com

REVISION	BY	DATE

PLAN SCALE: 1" = 20'
PROFILE SCALE:
HORIZONTAL: 1" =
VERTICAL 1" =

DRAWN	BFS	01/2020
DESIGNED	JPD	01/2020
SURVEY		
PROJ. MGR.		
LEAD ENGR.		
FIELD MGR.		
RECOMMENDED: DESIGN MANAGER		

APPROVED: CITY ENGINEER

FILE: DRAWING: DATE: 10/20/20

ATLAS PAGE NO: 218, 219, 281, 282 SHEET 36 OF 165 SHEETS

DSN#: XXX PLOTTED BY: $USER# SCALE: $SCALE# $DATE# $TIME#
$FILE#

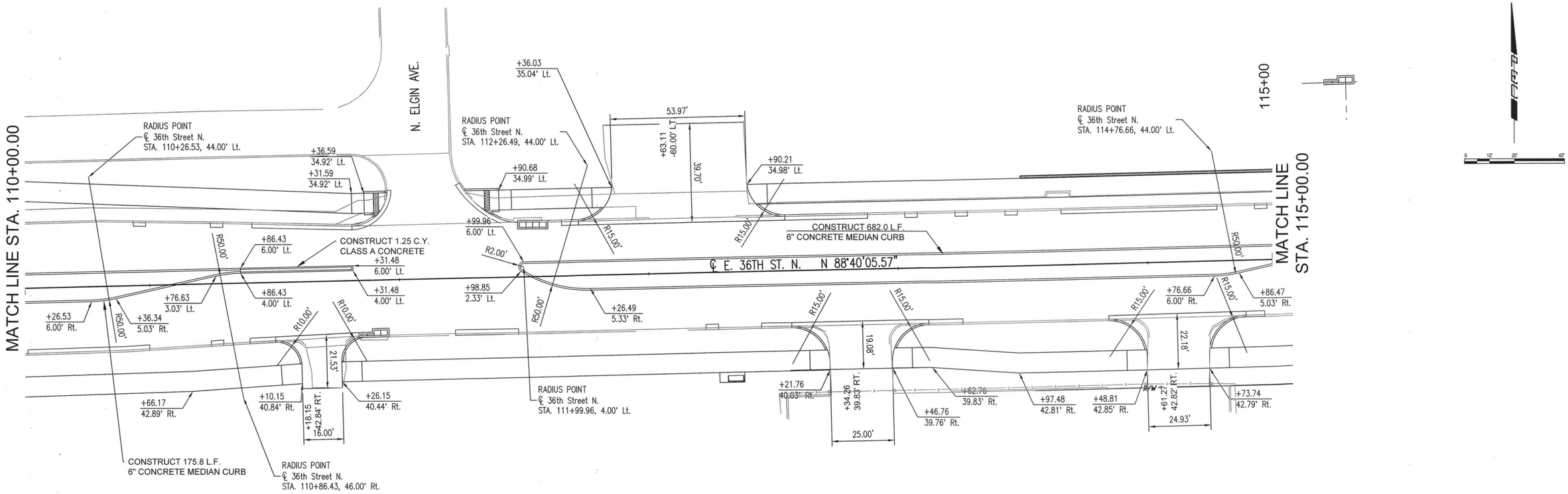

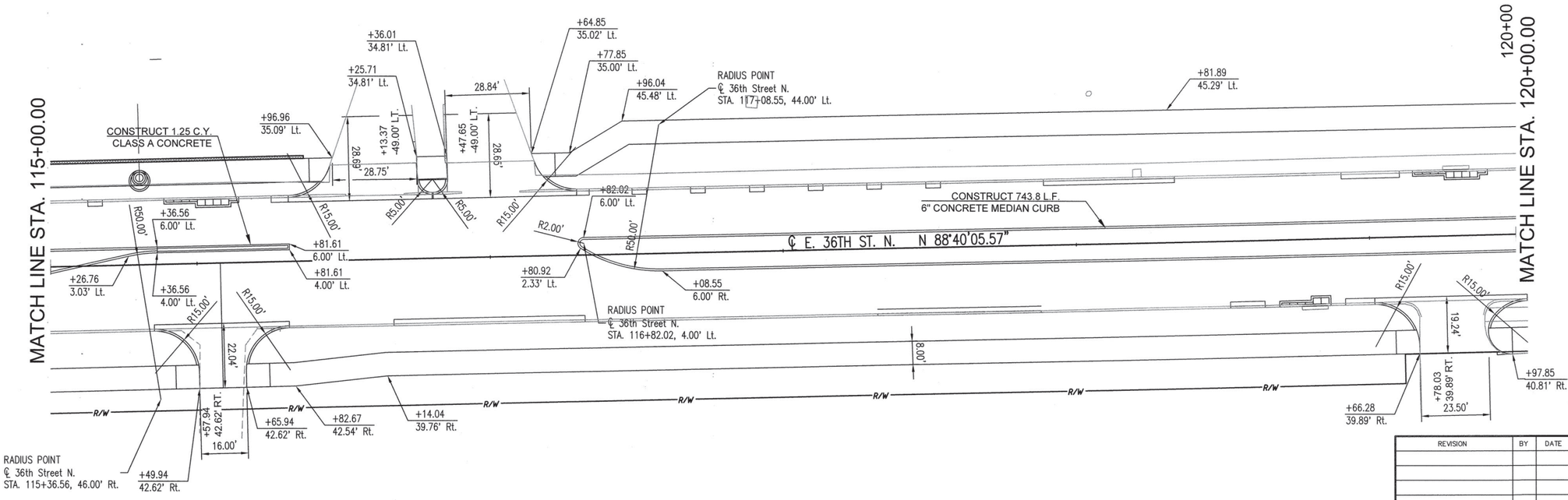

REVISION	BY	DATE

JASON P. DICKMAN 27639 LICENSED PROFESSIONAL ENGINEER OKLAHOMA
07/19/2020

GEOMETRIC DATA 2

PROJECT NO. 144200

ARTERIAL STREET REHABILITATION AND WATERLINE REPLACEMENT – 36TH ST. N. – MLK BLVD TO PEORIA AVE.

CITY OF TULSA, OKLAHOMA
ENGINEERING SERVICES DEPARTMENT

PLANS AND ESTIMATES PREPARED BY: PEC — PROFESSIONAL ENGINEERING CONSULTANTS, P.A. 1924 S. UTICA AVE., SUITE 1400 TULSA, OK 74104 918-664-5400 www.pec1.com

PLAN SCALE: 1" = 20'	DRAWN	BFS	01/2020	APPROVED:
	DESIGNED	JPD	01/2020	
	SURVEY			
PROFILE SCALE:	PROJ. MGR.			
HORIZONTAL: 1" =	LEAD ENGR.			
	FIELD MGR.			
VERTICAL 1" =	RECOMMENDED: DESIGN MANAGER			CITY ENGINEER

FILE: DRAWING: DATE: 10/30/20

ATLAS PAGE NO: 218, 219, 281, 282 SHEET 37 OF 165 SHEETS

DGN: XXX PLOTTED BY: $USER$ SCALE: $SCALE$ $DATE$ $TIME$
$FILE$

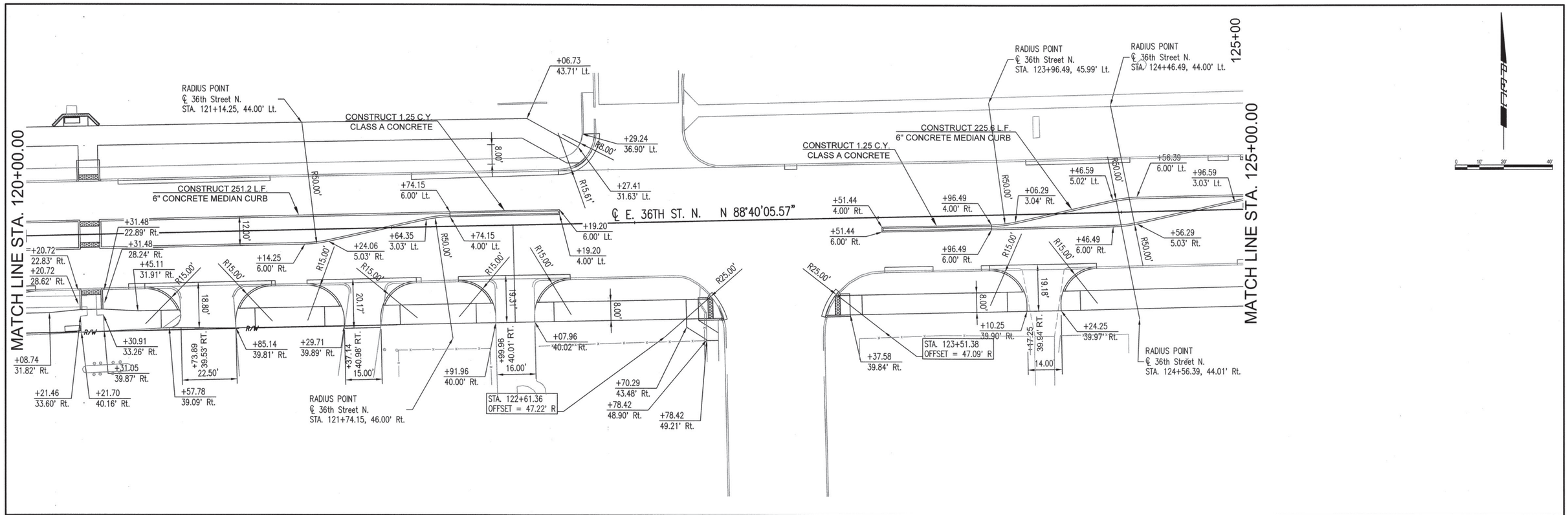

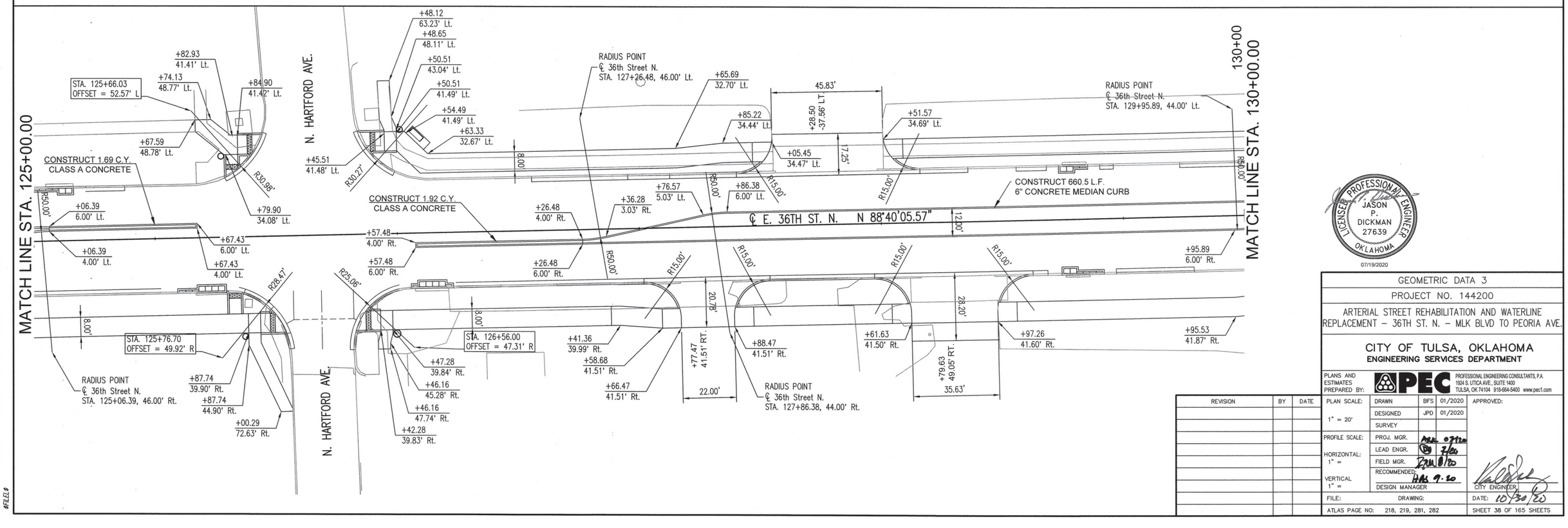

JASON P. DICKMAN 27639 LICENSED PROFESSIONAL ENGINEER OKLAHOMA
07/19/2020

REVISION	BY	DATE

GEOMETRIC DATA 3

PROJECT NO. 144200

ARTERIAL STREET REHABILITATION AND WATERLINE REPLACEMENT – 36TH ST. N. – MLK BLVD TO PEORIA AVE.

CITY OF TULSA, OKLAHOMA
ENGINEERING SERVICES DEPARTMENT

PLANS AND ESTIMATES PREPARED BY: PEC PROFESSIONAL ENGINEERING CONSULTANTS, P.A. 1924 S. UTICA AVE., SUITE 1400 TULSA, OK 74104 918-664-5400 www.pec1.com

PLAN SCALE: 1" = 20'	DRAWN	BFS	01/2020	APPROVED:
	DESIGNED	JPD	01/2020	
	SURVEY			
PROFILE SCALE:	PROJ. MGR.			
HORIZONTAL: 1" =	LEAD ENGR.			
	FIELD MGR.			
VERTICAL 1" =	RECOMMENDED: DESIGN MANAGER			CITY ENGINEER

FILE: DRAWING: DATE: 10/30/20

ATLAS PAGE NO: 218, 219, 281, 282 SHEET 38 OF 165 SHEETS

DGN: XXX PLOTTED BY: #PEL# #USER# SCALE: #SCALE# #DATE# #TIME#

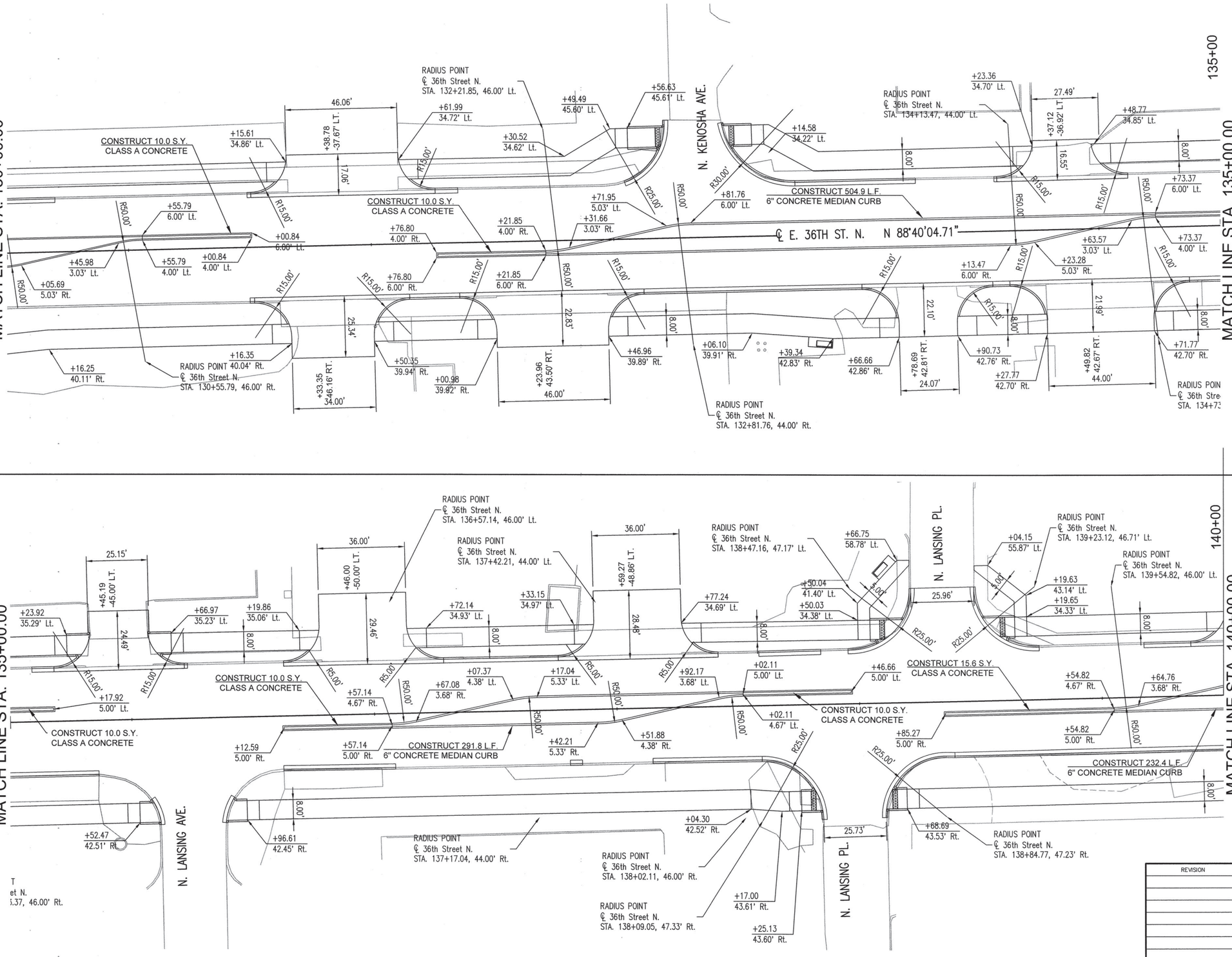

REVISION	BY	DATE

JASON P. DICKMAN 27639 PROFESSIONAL ENGINEER LICENSED OKLAHOMA
07/19/2020

GEOMETRIC DATA 4

PROJECT NO. 144200

ARTERIAL STREET REHABILITATION AND WATERLINE REPLACEMENT – 36TH ST. N. – MLK BLVD TO PEORIA AVE.

CITY OF TULSA, OKLAHOMA
ENGINEERING SERVICES DEPARTMENT

PLANS AND ESTIMATES PREPARED BY: PEC — PROFESSIONAL ENGINEERING CONSULTANTS, P.A. 1924 S. UTICA AVE., SUITE 1400 TULSA, OK 74104 918-664-5400 www.pec1.com

PLAN SCALE: 1" = 20'	DRAWN	BFS	01/2020	APPROVED:
	DESIGNED	JPD	01/2020	
	SURVEY			
PROFILE SCALE:	PROJ. MGR.			
	LEAD ENGR.			
HORIZONTAL: 1" =	FIELD MGR.			
VERTICAL 1" =	RECOMMENDED: DESIGN MANAGER			CITY ENGINEER
FILE:	DRAWING:			DATE: 10/30/20
ATLAS PAGE NO: 218, 219, 281, 282				SHEET 39 OF 165 SHEETS

DSN#: XXX PLOTTED BY: #USER# SCALE: #SCALE# #DATE# #TIME#

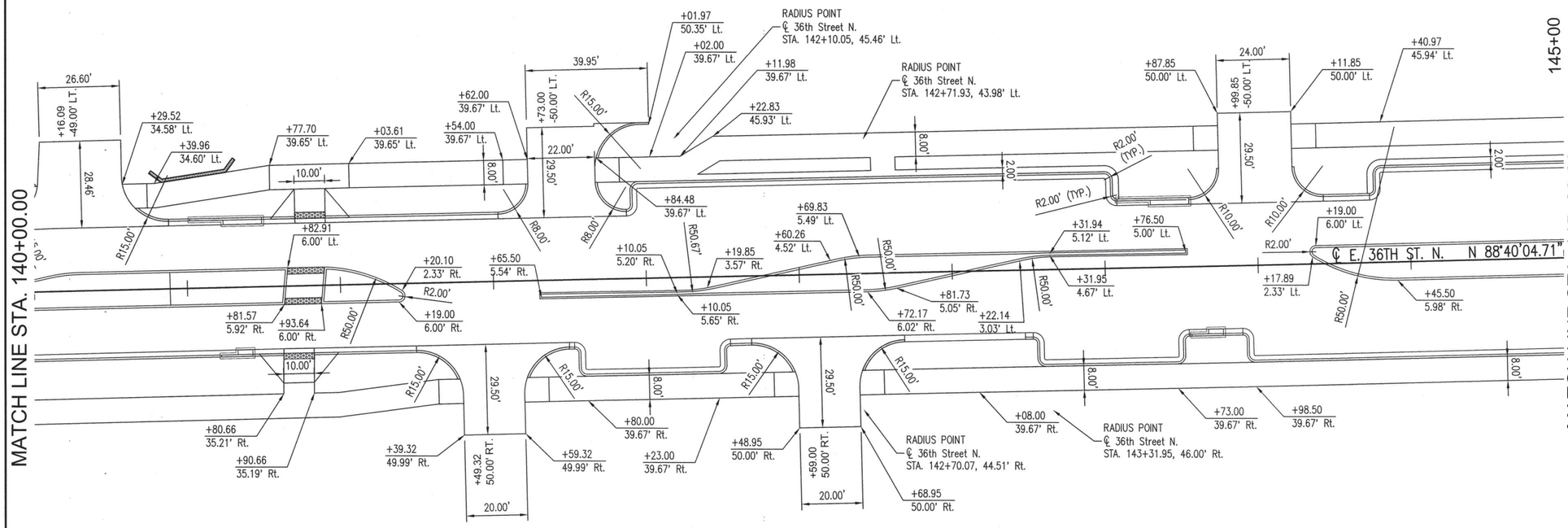

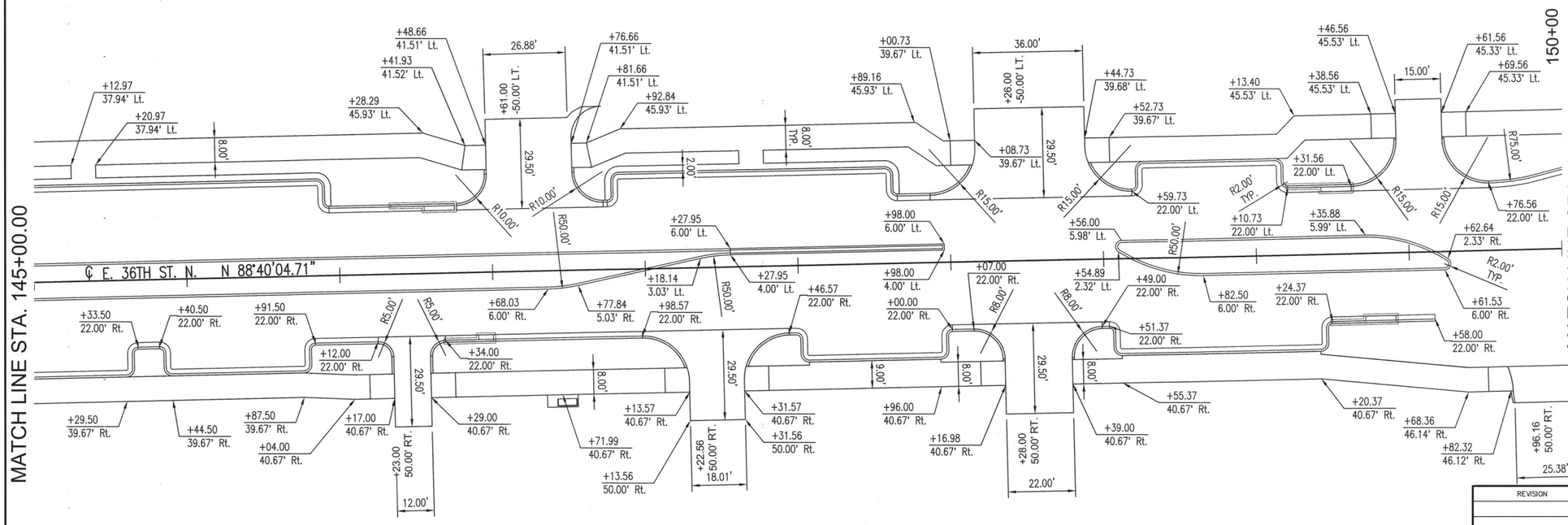

JASON P. DICKMAN 27639 PROFESSIONAL ENGINEER LICENSED OKLAHOMA

07/19/2020

GEOMETRIC DATA 5

PROJECT NO. 144200

ARTERIAL STREET REHABILITATION AND WATERLINE REPLACEMENT – 36TH ST. N. – MLK BLVD TO PEORIA AVE.

CITY OF TULSA, OKLAHOMA
ENGINEERING SERVICES DEPARTMENT

PLANS AND ESTIMATES PREPARED BY: PEC — PROFESSIONAL ENGINEERING CONSULTANTS, P.A. 1924 S. UTICA AVE., SUITE 1400 TULSA, OK 74104 918-664-5400 www.pec1.com

REVISION	BY	DATE

PLAN SCALE: 1" = 20'
PROFILE SCALE:
HORIZONTAL: 1" =
VERTICAL 1" =

DRAWN	BFS	01/2020
DESIGNED	JPD	01/2020
SURVEY		
PROJ. MGR.		7/20
LEAD ENGR.		7/20
FIELD MGR.		8/20
RECOMMENDED:		9-20
DESIGN MANAGER		

APPROVED:

CITY ENGINEER

FILE: DRAWING: DATE: 10/30/20

ATLAS PAGE NO: 218, 219, 281, 282 SHEET 40 OF 165 SHEETS

DGN: XXX PLOTTED BY: #USER# SCALE: #SCALE# DATE: #DATE# TIME: #TIME#

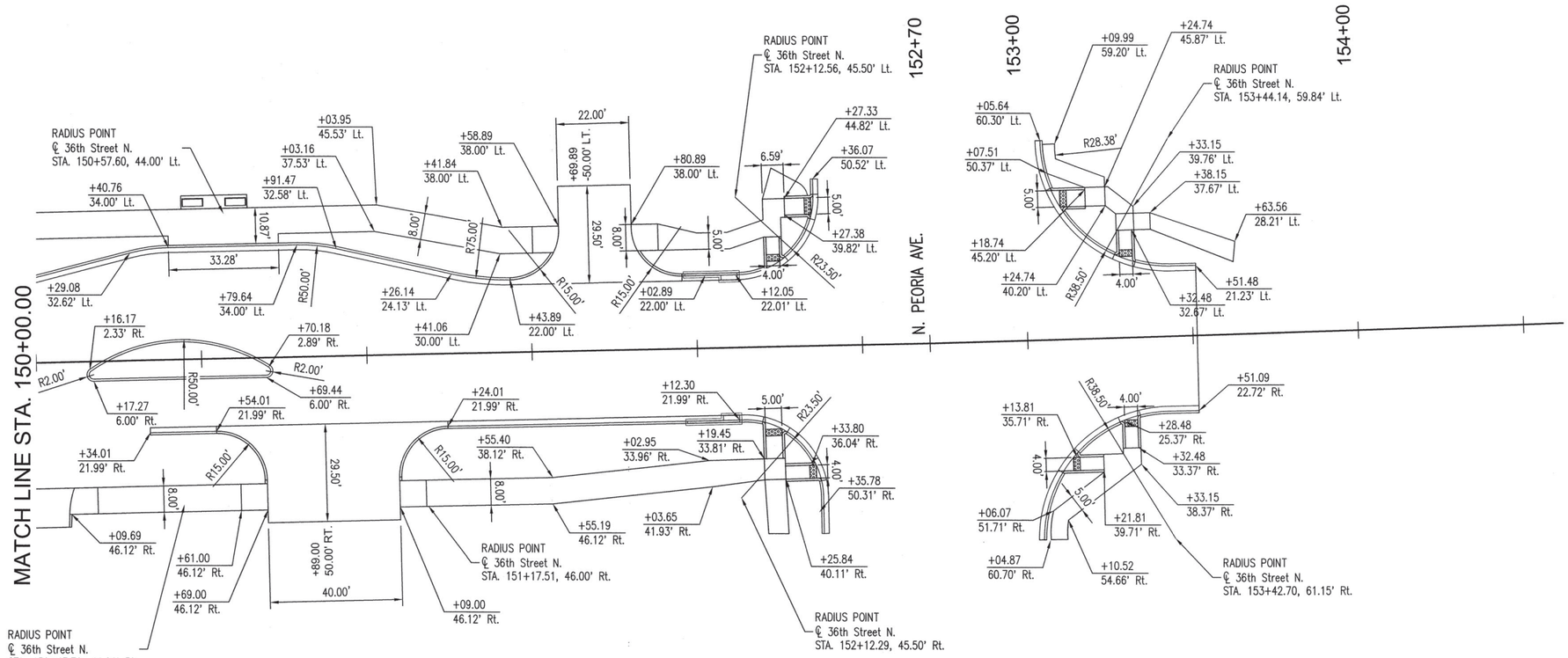

LICENSED PROFESSIONAL ENGINEER
JASON P. DICKMAN 27639
OKLAHOMA
07/19/2020

REVISION	BY	DATE

GEOMETRIC DATA 6

PROJECT NO. 144200

ARTERIAL STREET REHABILITATION AND WATERLINE REPLACEMENT – 36TH ST. N. – MLK BLVD TO PEORIA AVE.

CITY OF TULSA, OKLAHOMA
ENGINEERING SERVICES DEPARTMENT

PLANS AND ESTIMATES PREPARED BY: PEC — PROFESSIONAL ENGINEERING CONSULTANTS, P.A. 1924 S. UTICA AVE., SUITE 1400 TULSA, OK 74104 918-664-5400 www.pec1.com

PLAN SCALE: 1" = 20'	DRAWN	BFS	01/2020	APPROVED:
	DESIGNED	JPD	01/2020	
	SURVEY			
PROFILE SCALE:	PROJ. MGR.		07/20	
HORIZONTAL: 1" =	LEAD ENGR.		7/20	
	FIELD MGR.		8/20	
VERTICAL 1" =	RECOMMENDED: DESIGN MANAGER		9/20	CITY ENGINEER
FILE:	DRAWING:			DATE: 10/30/20
ATLAS PAGE NO: 218, 219, 281, 282				SHEET 41 OF 165 SHEETS

DSNR: XXX PLOTTED BY: $USER$ SCALE: $SCALE$ $DATE$ $TIME$
$FILE$

MEDIAN ELEVATION POINTS

PT. NO.	NORTHING	EASTING	STATION	OFFSET	ELEVATION
1	445093.498	2560503.519	100+56.00	6.00'	712.973'
2	445095.497	2560503.474	100+56.00	4.00'	713.034'
3	445095.567	2560592.543	101+45.05	6.00'	707.874'
4	445097.567	2560592.497	101+45.05	4.00'	707.897'
5	445098.765	2560602.277	101+54.85	3.03'	707.024'
6	445107.27	2560642.479	101+95.24	-4.54'	703.413'
7	445108.956	2560652.15	102+04.95	-6.00'	702.538'
8	445100.439	2560802.098	103+54.66	6.00'	687.171'
9	445101.638	2560811.878	103+64.47	5.03'	686.291'
10	445110.63	2560851.971	104+04.76	-3.03'	682.795'
11	445111.829	2560861.751	104+14.56	-4.00'	681.928'
12	445113.828	2560861.705	104+14.56	-6.00'	681.895'
13	445112.876	2560906.788	104+59.61	-4.00'	678.617'
14	445114.875	2560906.742	104+59.61	-6.00'	678.562'
15	445112.861	2560977.855	105+30.66	-2.33'	674.165'
16	445116.552	2560978.875	105+31.76	-6.00'	674.029'
17	445105.172	2561005.679	105+58.30	6.00'	672.615'
18	445106.141	2561047.371	106+00.00	6.00'	670.649'
19	445118.138	2561047.093	106+00.00	-6.00'	670.628'
20	445107.303	2561097.358	106+50.00	6.00'	668.718'
21	445119.3	2561097.079	106+50.00	-6.00'	668.689'
22	445108.465	2561147.344	107+00.00	6.00'	667.246'
23	445120.462	2561147.066	107+00.00	-6.00'	667.215'
24	445109.628	2561197.331	107+50.00	6.00'	666.067'
25	445121.624	2561197.052	107+50.00	-6.00'	666.063'
26	445110.79	2561247.317	108+00.00	6.00'	664.977'
27	445122.786	2561247.039	108+00.00	-6.00'	664.994'
28	445111.952	2561297.304	108+50.00	6.00'	663.944'
29	445123.949	2561297.025	108+50.00	-6.00'	663.947'
30	445113.114	2561347.29	109+00.00	6.00'	662.923'
31	445125.111	2561347.012	109+00.00	-6.00'	662.923'
32	445114.276	2561397.277	109+50.00	6.00'	661.936'
33	445126.273	2561396.998	109+50.00	-6.00'	661.907'
34	445115.438	2561447.263	110+00.00	6.00'	660.932'
35	445127.435	2561446.984	110+00.00	-6.00'	660.945'
36	445116.055	2561473.786	110+26.53	6.00'	660.448'
37	445117.253	2561483.567	110+36.34	5.03'	660.294'
38	445126.246	2561523.659	110+76.63	-3.03'	659.454'
39	445127.444	2561533.439	110+86.43	-4.00'	659.229'
40	445129.444	2561533.393	110+86.43	-6.00'	659.218'
41	445128.491	2561578.476	111+31.48	-4.00'	658.260'
42	445130.491	2561578.43	111+31.48	-6.00'	658.260'
43	445128.391	2561645.867	111+98.85	-2.33'	656.824'
44	445132.082	2561646.887	111+99.96	-6.00'	656.788'
45	445120.702	2561673.691	112+26.49	6.00'	656.112'
46	445121.249	2561697.196	112+50.00	6.00'	655.638'
47	445133.245	2561696.917	112+50.00	-6.00'	655.797'
48	445122.411	2561747.182	113+00.00	6.00'	654.555'
49	445134.407	2561746.903	113+00.00	-6.00'	654.705'
50	445123.573	2561797.169	113+50.00	6.00'	653.410'
51	445135.57	2561796.89	113+50.00	-6.00'	653.527'
52	445124.735	2561847.155	114+00.00	6.00'	652.272'
53	445136.732	2561846.876	114+00.00	-6.00'	652.390'
54	445125.897	2561897.142	114+50.00	6.00'	651.280'
55	445137.894	2561896.863	114+50.00	-6.00'	651.390'
56	445126.517	2561923.794	114+76.66	6.00'	650.837'
57	445127.715	2561933.575	114+86.47	5.03'	650.712'
58	445136.708	2561973.667	115+26.76	-3.03'	650.284'
59	445137.906	2561983.448	115+36.56	-4.00'	650.158'
60	445139.906	2561983.401	115+36.56	-6.00'	650.159'
61	445138.953	2562028.484	115+81.61	-4.00'	649.619'
62	445140.953	2562028.438	115+81.61	-6.00'	649.603'
63	445139.595	2562127.802	116+80.92	-2.33'	648.687'
64	445143.286	2562128.822	116+82.02	-6.00'	648.635'
65	445131.906	2562155.627	117+08.55	6.00'	648.320'
66	445132.87	2562197.061	117+50.00	6.00'	647.973'
67	445144.866	2562196.782	117+50.00	-6.00'	647.989'
68	445134.032	2562247.047	118+00.00	6.00'	647.337'
69	445146.028	2562246.768	118+00.00	-6.00'	647.371'
70	445135.194	2562297.034	118+50.00	6.00'	646.933'
71	445147.191	2562296.755	118+50.00	-6.00'	647.020'
72	445136.356	2562347.02	119+00.00	6.00'	646.511'

MEDIAN ELEVATION POINTS

PT. NO.	NORTHING	EASTING	STATION	OFFSET	ELEVATION
73	445148.353	2562346.741	119+00.00	-6.00'	646.531'
74	445137.518	2562397.007	119+50.00	6.00'	646.171'
75	445149.515	2562396.728	119+50.00	-6.00'	646.192'
76	445138.68	2562446.993	120+00.00	6.00'	645.835'
77	445150.677	2562446.714	120+00.00	-6.00'	645.801'
78	445139.194	2562469.092	120+22.10	6.00'	645.645'
79	445151.191	2562468.813	120+22.10	-6.00'	645.610'
80	445139.38	2562477.089	120+30.10	6.00'	645.575'
81	445151.377	2562476.81	120+30.10	-6.00'	645.562'
82	445139.842	2562496.98	120+50.00	6.00'	645.431'
83	445151.839	2562496.701	120+50.00	-6.00'	645.421'
84	445141.004	2562546.966	121+00.00	6.00'	645.087'
85	445153.001	2562546.687	121+00.00	-6.00'	645.071'
86	445141.335	2562561.212	121+14.25	6.00'	644.982'
87	445142.534	2562570.993	121+24.06	5.03'	644.918'
88	445151.526	2562611.085	121+64.35	-3.03'	644.612'
89	445152.725	2562620.866	121+74.15	-4.00'	644.523'
90	445154.724	2562620.819	121+74.15	-6.00'	644.490'
91	445153.772	2562665.902	122+19.20	-4.00'	644.171'
92	445155.772	2562665.856	122+19.20	-6.00'	644.133'
93	445146.836	2562798.338	123+51.44	6.01'	643.199'
94	445148.835	2562798.291	123+51.44	4.01'	643.218'
95	445147.888	2562843.375	123+96.49	6.01'	642.715'
96	445149.882	2562843.328	123+96.49	4.01'	642.730'
97	445151.081	2562853.109	124+06.29	3.04'	642.631'
98	445160.074	2562893.203	124+46.59	-5.02'	642.062'
99	445149.055	2562893.364	124+46.49	6.00'	642.060'
100	445150.254	2562903.14	124+56.29	5.03'	641.942'
101	445161.272	2562902.979	124+56.39	-5.99'	641.918'
102	445159.247	2562943.235	124+96.59	-3.03'	641.398'
103	445160.445	2562953.015	125+06.39	-4.00'	641.245'
104	445162.44	2562952.968	125+06.39	-5.99'	641.203'
105	445161.866	2563014.043	125+67.43	-4.00'	640.748'
106	445163.865	2563013.996	125+67.43	-6.00'	640.700'
107	445153.961	2563104.293	126+57.48	6.00'	640.709'
108	445155.961	2563104.246	126+57.48	4.00'	640.747'
109	445155.565	2563173.274	127+26.48	6.00'	641.352'
110	445157.565	2563173.227	127+26.48	4.00'	641.378'
111	445158.763	2563183.008	127+36.28	3.03'	641.450'
112	445167.756	2563223.101	127+76.57	-5.03'	641.858'
113	445168.955	2563232.882	127+86.38	-6.00'	641.942'
114	445157.274	2563246.777	128+00.00	6.00'	642.079'
115	445169.271	2563246.498	128+00.00	-6.00'	642.082'
116	445158.437	2563296.764	128+50.00	6.00'	642.602'
117	445170.433	2563296.485	128+50.00	-6.00'	642.612'
118	445159.599	2563346.75	129+00.00	6.00'	643.147'
119	445171.596	2563346.471	129+00.00	-6.00'	643.144'
120	445160.761	2563396.737	129+50.00	6.00'	643.919'
121	445172.758	2563396.458	129+50.00	-6.00'	643.909'
122	445161.828	2563442.611	129+95.89	6.00'	644.749'
123	445163.027	2563452.392	130+05.69	5.03'	644.967'
124	445173.92	2563446.444	130+00.00	-6.00'	644.809'
125	445172.019	2563492.484	130+45.98	-3.03'	645.809'
126	445173.218	2563502.265	130+55.79	-4.00'	645.996'
127	445175.217	2563502.218	130+55.79	-6.00'	645.967'
128	445176.264	2563547.255	131+00.84	-6.00'	646.928'
129	445174.265	2563547.301	131+00.84	-4.00'	646.963'
130	445168.033	2563623.433	131+76.80	4.00'	648.605'
131	445166.034	2563623.48	131+76.80	6.00'	648.596'
132	445169.08	2563668.47	132+21.85	4.00'	649.538'
133	445167.081	2563668.517	132+21.85	6.00'	649.557'
134	445170.279	2563678.251	132+31.66	3.03'	649.762'
135	445167.735	2563696.656	132+50.00	6.00'	650.147'
136	445179.271	2563718.343	132+71.95	-5.03'	650.647'
137	445180.47	2563728.124	132+81.76	-6.00'	650.888'
138	445168.897	2563746.642	133+00.00	6.00'	651.354'
139	445180.894	2563746.363	133+00.00	-6.00'	651.352'
140	445170.06	2563796.629	133+50.00	6.00'	652.445'
141	445182.057	2563796.35	133+50.00	-6.00'	652.437'
142	445171.222	2563846.615	134+00.00	6.00'	653.337'
143	445183.219	2563846.336	134+00.00	-6.00'	653.356'
144	445171.535	2563860.081	134+13.47	6.00'	653.530'

MEDIAN ELEVATION POINTS

PT. NO.	NORTHING	EASTING	STATION	OFFSET	ELEVATION
145	445172.734	2563869.862	134+23.28	5.03'	653.693'
146	445181.726	2563909.954	134+63.57	-3.03'	654.366'
147	445184.381	2563896.323	134+50.00	-6.00'	654.136'
148	445182.925	2563919.735	134+73.37	-4.00'	654.506'
149	445184.924	2563919.688	134+73.37	-6.00'	654.489'
150	445183.972	2563964.772	135+18.42	-4.00'	655.171'
151	445185.972	2563964.725	135+18.42	-6.00'	655.145'
152	445176.152	2564058.65	136+12.09	6.00'	655.938'
153	445178.152	2564058.603	136+12.09	4.00'	655.980'
154	445177.2	2564103.687	136+57.14	6.00'	656.097'
155	445179.199	2564103.64	136+57.14	4.00'	656.132'
156	445180.398	2564113.421	136+66.95	3.03'	656.138'
157	445178.196	2564146.534	137+00.00	6.00'	656.058'
158	445189.39	2564153.513	137+07.24	-5.03'	656.042'
159	445190.589	2564163.293	137+17.04	-6.00'	655.993'
160	445179.177	2564188.73	137+42.21	6.00'	655.829'
161	445180.376	2564198.51	137+52.01	5.03'	655.766'
162	445191.355	2564196.241	137+50.00	-6.00'	655.779'
163	445189.368	2564238.602	137+92.30	-3.03'	655.424'
164	445190.567	2564248.383	138+02.11	-4.00'	655.277'
165	445192.566	2564248.336	138+02.11	-6.00'	655.269'
166	445191.614	2564293.42	138+47.16	-4.00'	654.612'
167	445193.614	2564293.373	138+47.16	-6.00'	654.596'
168	445182.491	2564331.254	138+84.77	6.00'	653.982'
169	445184.491	2564331.208	138+84.77	4.00'	654.017'
170	445184.119	2564401.284	139+54.82	6.00'	652.903'
171	445186.119	2564401.238	139+54.82	4.00'	652.922'
172	445187.318	2564411.018	139+64.62	3.03'	652.769'
173	445185.17	2564446.453	140+00.00	6.00'	652.268'
174	445195.213	2564446.219	140+00.00	-4.05'	652.313'
175	445196.31	2564451.11	140+04.92	-5.03'	652.247'
176	445197.509	2564460.891	140+14.72	-6.00'	652.120'
177	445186.332	2564496.439	140+50.00	6.00'	651.610'
178	445198.329	2564496.16	140+50.00	-6.00'	651.610'
179	445187.066	2564527.995	140+81.56	6.00'	651.224'
180	445199.094	2564529.058	140+82.91	-6.00'	651.207'
181	445187.347	2564540.067	140+93.64	6.00'	651.075'
182	445199.311	2564541.124	140+94.97	-5.94'	651.058'
183	445187.936	2564565.419	141+19.00	6.00'	650.734'
184	445191.627	2564566.439	141+20.10	2.33'	650.720'
185	445189.005	2564611.408	141+65.00	6.00'	650.020'
186	445191.005	2564611.371	141+65.01	4.00'	650.020'
187	445190.083	2564657.772	142+11.38	6.00'	649.158'
188	445191.861	2564657.731	142+11.38	4.22'	649.158'
189	445193.065	2564667.751	142+21.42	3.25'	648.960'
190	445190.981	2564696.385	142+50.00	6.00'	648.449'
191	445199.443	2564696.189	142+50.00	-2.46'	648.449'
192	445202.291	2564708.886	142+62.76	-5.02'	648.256'
193	445191.492	2564718.361	142+71.98	6.00'	648.116'
194	445203.506	2564718.797	142+72.70	-6.00'	648.107'
195	445192.707	2564728.272	142+81.92	5.02'	647.985'
196	445201.919	2564769.341	143+23.19	-3.24'	647.533'
197	445203.123	2564779.362	143+33.24	-4.21'	647.450'
199	445204.14	2564746.093	143+00.00	-6.00'	647.762'
200	445203.931	2564823.107	143+76.99	-4.00'	647.116'
201	445205.93	2564823.07	143+77.00	-6.00'	647.116'
202	445203.215	2564864.041	144+17.89	-2.33'	646.671'
203	445206.907	2564865.059	144+19.00	-6.00'	646.658'
204	445195.545	2564891.836	144+45.50	5.98'	646.290'
205	445195.649	2564896.331	144+50.00	5.98'	646.226'
206	445207.627	2564896.052	144+50.00	-6.00'	646.226'
207	445196.807	2564946.317	145+00.00	5.99'	645.350'
208	445208.79	2564946.039	145+00.00	-6.00'	645.350'
209	445197.964	2564996.304	145+50.00	5.99'	644.323'
210	445209.952	2564996.025	145+50.00	-6.00'	644.323'
211	445199.122	2565046.291	146+00.00	6.00'	643.292'
212	445211.114	2565046.012	146+00.00	-6.00'	643.292'
213	445200.279	2565096.277	146+50.00	6.00'	642.261'
214	445212.277	2565095.999	146+50.00	-6.00'	642.261'
215	445200.696	2565114.303	146+68.03	6.00'	641.889'
216	445201.895	2565124.088	146+77.84	5.03'	641.686'
217	445210.89	2565164.192	147+18.14	-3.03'	640.855'

MEDIAN ELEVATION POINTS

PT. NO.	NORTHING	EASTING	STATION	OFFSET	ELEVATION
218	445212.089	2565173.973	147+27.95	-4.00'	640.653'
219	445214.089	2565173.926	147+27.95	-6.00'	640.653'
220	445213.717	2565244.003	147+98.00	-4.00'	639.209'
221	445215.717	2565243.956	147+98.00	-6.00'	639.209'
222	445213.357	2565300.923	148+54.89	-2.32'	638.089'
223	445217.049	2565301.941	148+56.00	-5.98'	638.069'
224	445205.688	2565328.718	148+82.50	6.00'	637.578'
225	445206.093	2565346.21	149+00.00	6.00'	637.262'
226	445218.076	2565345.931	149+00.00	-5.99'	637.262'
227	445218.913	2565381.805	149+35.88	-5.99'	636.633'
228	445207.521	2565407.724	149+61.53	6.00'	636.169'
229	445211.212	2565408.744	149+62.64	2.33'	636.150'
230	445208.81	2565463.436	150+17.26	6.01'	635.046'
231	445212.45	2565462.245	150+16.15	2.34'	635.071'
232	445210.031	2565515.602	150+69.44	6.00'	633.852'
233	445213.722	2565516.622	150+70.54	2.33'	633.826'

- THERE IS NO POINT NUMBER 198

LICENSED PROFESSIONAL ENGINEER
JASON P. DICKMAN 27639
OKLAHOMA
09/16/2020

MEDIAN POINTS

PROJECT NO. 144200

ARTERIAL STREET REHABILITATION AND WATERLINE REPLACEMENT – 36TH ST. N. – MLK BLVD TO PEORIA AVE.

CITY OF TULSA, OKLAHOMA
ENGINEERING SERVICES DEPARTMENT

PLANS AND ESTIMATES PREPARED BY: PEC PROFESSIONAL ENGINEERING CONSULTANTS, P.A. 1924 S. UTICA AVE., SUITE 1400 TULSA, OK 74104 918-664-5400 www.pec1.com

REVISION	BY	DATE

PLAN SCALE: 1" = 20'
PROFILE SCALE:
HORIZONTAL: 1" =
VERTICAL 1" =

DRAWN	BFS	01/2020
DESIGNED	JPD	01/2020
SURVEY		
PROJ. MGR.		
LEAD ENGR.		
FIELD MGR.		
RECOMMENDED: HRS 10-20 DESIGN MANAGER		

APPROVED: CITY ENGINEER

FILE: DRAWING: DATE: 10/20/20

ATLAS PAGE NO: 218, 219, 281, 282 SHEET 41A OF 165 SHEETS

DSN#: XXX PLOTTED BY: $USER# SCALE: $SCALE# $DATE# $TIME#
$FILE#

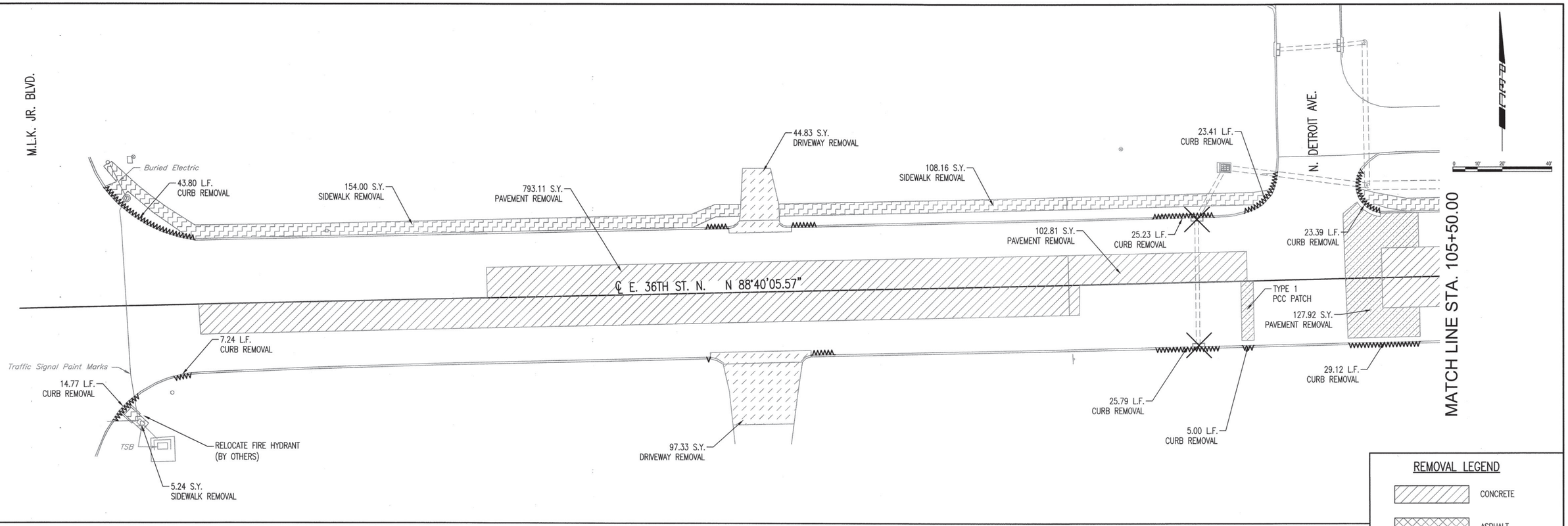

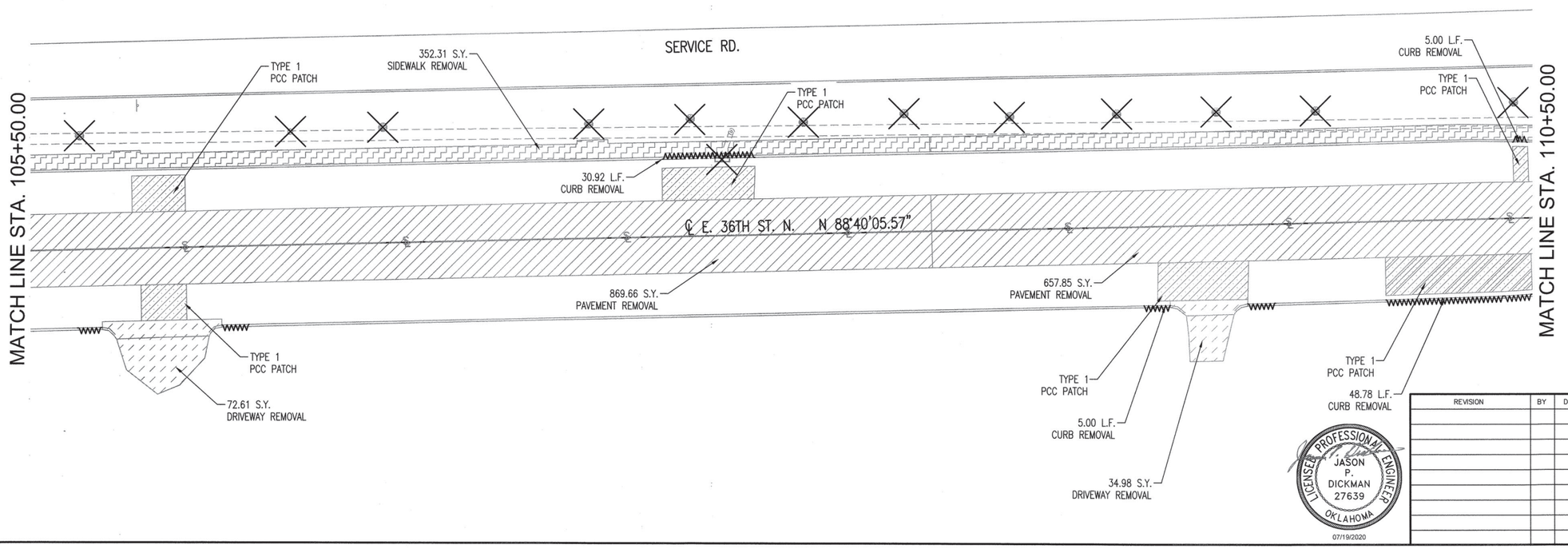

LICENSED PROFESSIONAL ENGINEER
JASON P. DICKMAN
27639
OKLAHOMA
07/19/2020

REVISION	BY	DATE

DEMOLITION PLAN 1

PROJECT NO. 144200

ARTERIAL STREET REHABILITATION AND WATERLINE REPLACEMENT – 36TH ST. N. – MLK BLVD TO PEORIA AVE.

CITY OF TULSA, OKLAHOMA
ENGINEERING SERVICES DEPARTMENT

PLANS AND ESTIMATES PREPARED BY: PEC PROFESSIONAL ENGINEERING CONSULTANTS, P.A. 1924 S. UTICA AVE., SUITE 1400 TULSA, OK 74104 918-664-5400 www.pec1.com

PLAN SCALE: 1" = 20'	DRAWN	BFS	01/2020	APPROVED:
	DESIGNED	JPD	01/2020	
	SURVEY			
PROFILE SCALE:	PROJ. MGR.		07/20	
HORIZONTAL: 1" =	LEAD ENGR.		7/20	
	FIELD MGR.		7/20	
VERTICAL 1" =	RECOMMENDED: DESIGN MANAGER		9.20	CITY ENGINEER
FILE:	DRAWING:			DATE: 10/30/20
ATLAS PAGE NO: 218, 219, 281, 282				SHEET 42 OF 165 SHEETS

$TIME$ $DATE$ $SCALE$ $USER$ SCALE: PLOTTED BY: XXX DSWG: $FILE$

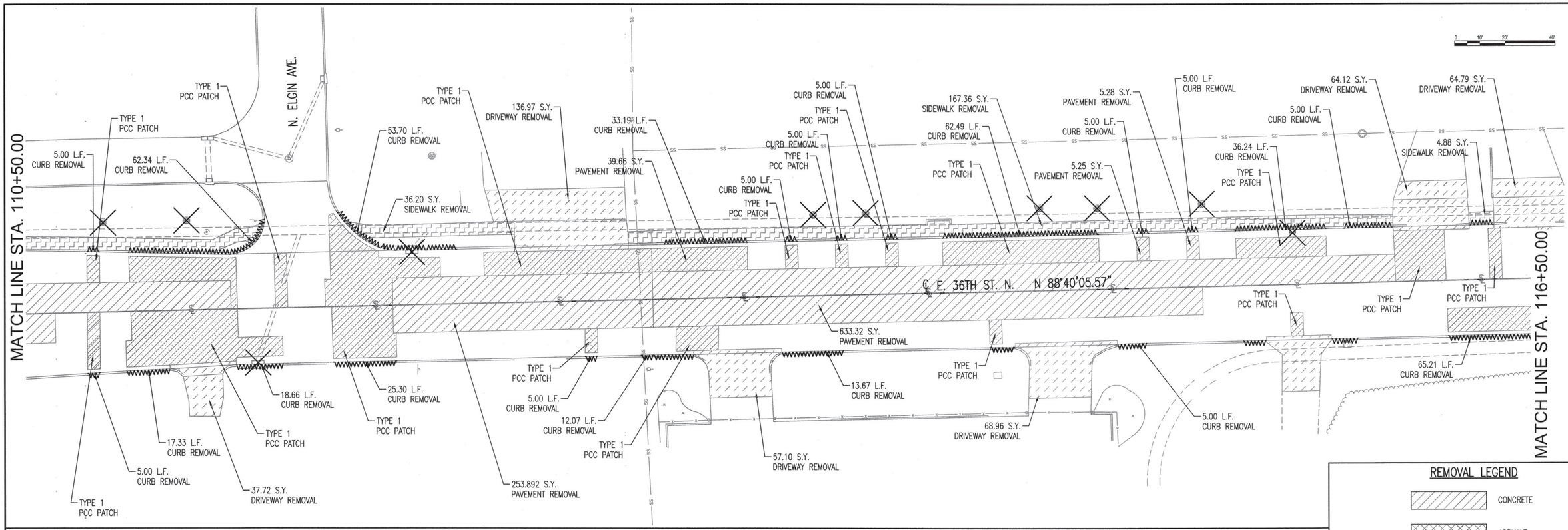

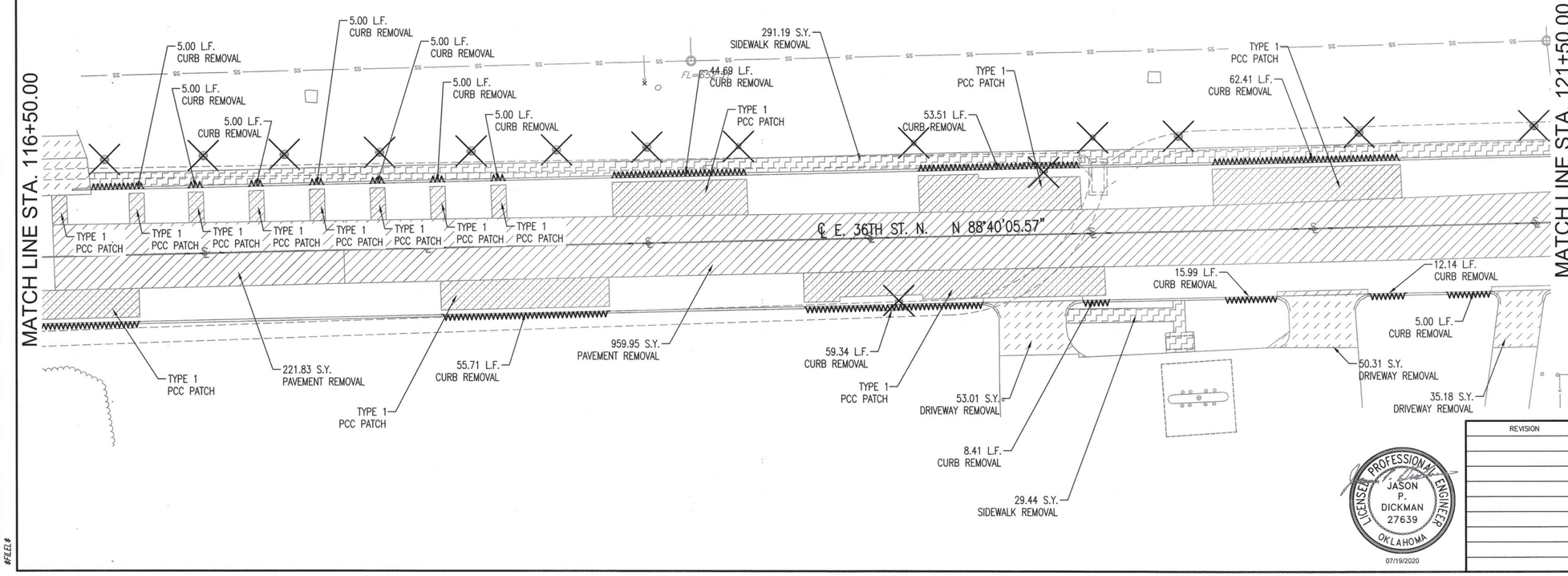

REMOVAL LEGEND

- CONCRETE
- ASPHALT
- DRIVEWAYS
- SIDEWALK
- TYPE I PCC PATCH SEE PLAN SHEETS
- CURB
- FLOWABLE FILL IN PIPE
- STRUCTURE/TREE REMOVAL
- REMOVE PIPE
- REMOVE FENCE

DSWG: XXX PLOTTED BY: $USER$ SCALE: $SCALE$ $DATE$ $FILE$ $TIME$

LICENSED PROFESSIONAL ENGINEER JASON P. DICKMAN 27639 OKLAHOMA
07/19/2020

REVISION	BY	DATE

DEMOLITION PLAN 2

PROJECT NO. 144200

ARTERIAL STREET REHABILITATION AND WATERLINE REPLACEMENT – 36TH ST. N. – MLK BLVD TO PEORIA AVE.

CITY OF TULSA, OKLAHOMA
ENGINEERING SERVICES DEPARTMENT

PLANS AND ESTIMATES PREPARED BY: PEC PROFESSIONAL ENGINEERING CONSULTANTS, P.A. 1924 S. UTICA AVE., SUITE 1400 TULSA, OK 74104 918-664-5400 www.pec1.com

PLAN SCALE: 1" = 20'	DRAWN	BFS	01/2020	APPROVED:
	DESIGNED	JPD	01/2020	
	SURVEY			
PROFILE SCALE:	PROJ. MGR.			
	LEAD ENGR.			
HORIZONTAL: 1" =	FIELD MGR.			
VERTICAL 1" =	RECOMMENDED: DESIGN MANAGER			CITY ENGINEER
FILE:	DRAWING:			DATE: 10/30/20
ATLAS PAGE NO: 218, 219, 281, 282				SHEET 43 OF 165 SHEETS

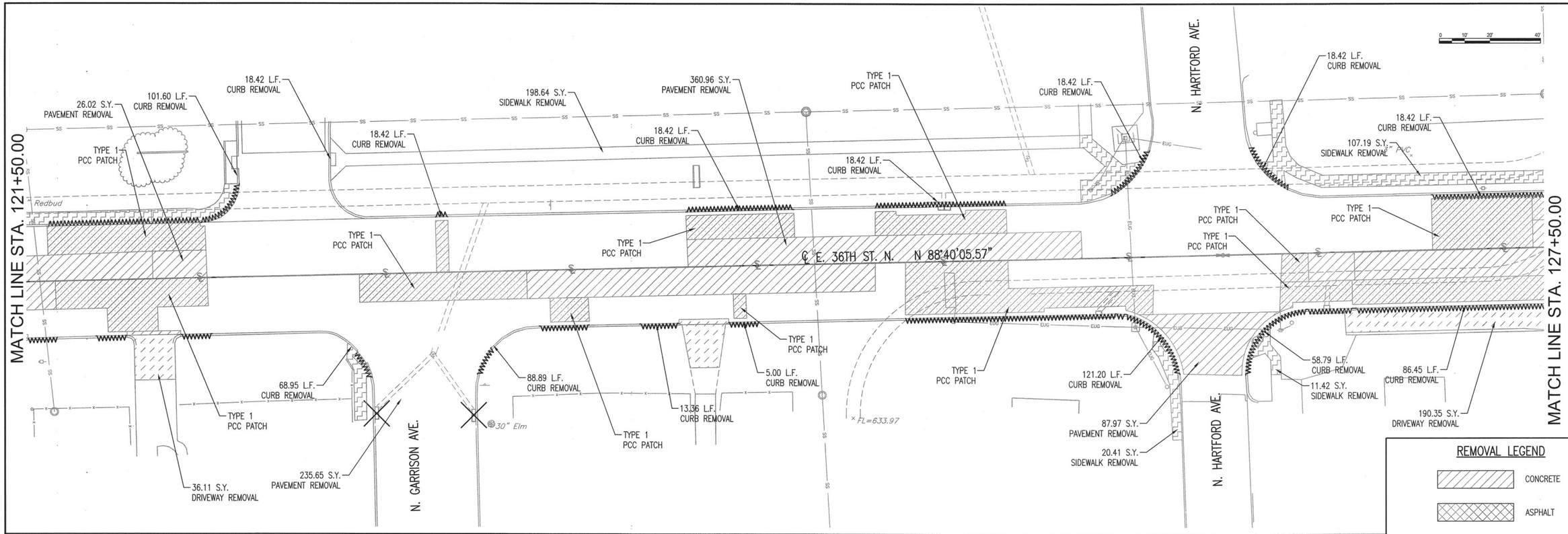

REMOVAL LEGEND

- CONCRETE
- ASPHALT
- DRIVEWAYS
- SIDEWALK
- TYPE I PCC PATCH SEE PLAN SHEETS
- CURB
- FLOWABLE FILL IN PIPE
- STRUCTURE/TREE REMOVAL
- REMOVE PIPE
- REMOVE FENCE

LICENSED PROFESSIONAL ENGINEER
JASON P. DICKMAN 27639
OKLAHOMA
07/19/2020

REVISION	BY	DATE

DEMOLITION PLAN 3

PROJECT NO. 144200

ARTERIAL STREET REHABILITATION AND WATERLINE REPLACEMENT – 36TH ST. N. – MLK BLVD TO PEORIA AVE.

CITY OF TULSA, OKLAHOMA
ENGINEERING SERVICES DEPARTMENT

PLANS AND ESTIMATES PREPARED BY: PEC — PROFESSIONAL ENGINEERING CONSULTANTS, P.A. 1924 S. UTICA AVE., SUITE 1400 TULSA, OK 74104 918-664-5400 www.pec1.com

PLAN SCALE: 1" = 20'	DRAWN	BFS	01/2020	APPROVED:
	DESIGNED	JPD	01/2020	
	SURVEY			
PROFILE SCALE:	PROJ. MGR.		07/20	
HORIZONTAL: 1" =	LEAD ENGR.		7/20	
	FIELD MGR.		7/20	
VERTICAL 1" =	RECOMMENDED: DESIGN MANAGER		9.20	CITY ENGINEER
FILE:	DRAWING:			DATE: 10/30/20
ATLAS PAGE NO: 218, 219, 281, 282				SHEET 44 OF 165 SHEETS

$TIME$ $DATE$ $SCALE$ SCALE: $USER$ PLOTTED BY: XXX DSN#: $FILE$

MATCH LINE STA. 132+50.00

N. KENOSHA AVE.

TYPE 1 PCC PATCH

724.41 S.Y. PAVEMENT REMOVAL

38.48 S.Y. SIDEWALK REMOVAL

1.33 L.F. CURB REMOVAL

188.15 S.Y. DRIVEWAY REMOVAL

175.91 S.Y. DRIVEWAY REMOVAL

49.94 S.Y. DRIVEWAY REMOVAL

56.51 S.Y. DRIVEWAY REMOVAL

31.08 S.Y. SIDEWALK REMOVAL

13.56 S.Y. SIDEWALK REMOVAL

49.33 L.F. CURB REMOVAL

11.15 L.F. CURB REMOVAL

5.00 L.F. CURB REMOVAL

9.07 L.F. CURB REMOVAL

5.00 L.F. CURB REMOVAL

20.88 L.F. CURB REMOVAL

19.21 L.F. CURB REMOVAL

50.27 S.Y. SIDEWALK REMOVAL

8.50 L.F. CURB REMOVAL

TPED

TYPE 1 PCC PATCH

62.05 L.F. CURB REMOVAL

TYPE 1 PCC PATCH

℄ E. 36TH ST. N. N 88°40'04.71"

TYPE 1 PCC PATCH

457.96 S.Y. PAVEMENT REMOVAL

MATCH LINE STA. 138+00.00

N. LANSING AVE.

46.08 L.F. CURB REMOVAL

30.24 L.F. CURB REMOVAL

403.05 S.Y. DRIVEWAY REMOVAL

5.34 S.Y. PAVEMENT REMOVAL

5.00 L.F. CURB REMOVAL

99.66 L.F. CURB REMOVAL

TYPE 1 PCC PATCH

113.47 S.Y. DRIVEWAY REMOVAL

17.04 L.F. CURB REMOVAL

115.61 S.Y. DRIVEWAY REMOVAL

59.13 L.F. CURB REMOVAL

128.92 S.Y. DRIVEWAY REMOVAL

26.61 L.F. CURB REMOVAL

MATCH LINE STA. 138+00.00

N. LANSING PL.

40.70 L.F. CURB REMOVAL

25.53 L.F. CURB REMOVAL

108.56 S.Y. SIDEWALK REMOVAL

TYPE 1 PCC PATCH

84.00 L.F. CURB REMOVAL

154.34 L.F. CURB REMOVAL

N. LANSING PL.

TYPE 1 PCC PATCH

68.16 S.Y. SIDEWALK REMOVAL

40.70 L.F. CURB REMOVAL

19.30 L.F. CURB REMOVAL

61.49 S.Y. DRIVEWAY REMOVAL

86.11 S.Y. SIDEWALK REMOVAL

Vent Pipe

OSAGE PRAIRIE TRAIL

91.06 S.Y. DRIVEWAY REMOVAL

44.16 L.F. CURB REMOVAL

REMOVE & SALVAGE ROCK BUSINESS SIGN TO OWNER

103.38 S.Y. SIDEWALK REMOVAL

RELOCATE LIGHT POLE

183.00 L.F. CURB REMOVAL

320.81 S.Y. PAVEMENT REMOVAL

℄ E. 36TH ST. N. N 88°40'04.71"

MATCH LINE STA. 143+50.00

TYPE 1 PCC PATCH

117.88 S.Y. PAVEMENT REMOVAL

131.00 L.F. CURB REMOVAL

20.87 S.Y. SIDEWALK REMOVAL

OSAGE PRAIRIE TRAIL

76.00 L.F. CURB REMOVAL

CPED (COX)

173.00 L.F. CURB REMOVAL

70.10 S.Y. DRIVEWAY REMOVAL

1477.33 S.Y. PAVEMENT REMOVAL

71.13 S.Y. DRIVEWAY REMOVAL

0 10' 20' 40'

REMOVAL LEGEND

- CONCRETE
- ASPHALT
- DRIVEWAYS
- SIDEWALK
- TYPE I PCC PATCH SEE PLAN SHEETS
- CURB
- FLOWABLE FILL IN PIPE
- STRUCTURE/TREE REMOVAL
- REMOVE PIPE
- REMOVE FENCE

LICENSED PROFESSIONAL ENGINEER
JASON P. DICKMAN 27639
OKLAHOMA

07/19/2020

REVISION	BY	DATE

DEMOLITION PLAN 4

PROJECT NO. 144200

ARTERIAL STREET REHABILITATION AND WATERLINE REPLACEMENT – 36TH ST. N. – MLK BLVD TO PEORIA AVE.

CITY OF TULSA, OKLAHOMA
ENGINEERING SERVICES DEPARTMENT

PLANS AND ESTIMATES PREPARED BY: PEC PROFESSIONAL ENGINEERING CONSULTANTS, P.A. 1924 S. UTICA AVE., SUITE 1400 TULSA, OK 74104 918-664-5400 www.pec1.com

PLAN SCALE: 1" = 20'	DRAWN	BFS	01/2020	APPROVED:
	DESIGNED	JPD	01/2020	
	SURVEY			
PROFILE SCALE:	PROJ. MGR.		07/20	
HORIZONTAL: 1" =	LEAD ENGR.		7/20	
	FIELD MGR.		7/20	
VERTICAL 1" =	RECOMMENDED: DESIGN MANAGER			CITY ENGINEER
FILE:	DRAWING:			DATE: 10/30/20
ATLAS PAGE NO: 218, 219, 281, 282				SHEET 45 OF 165 SHEETS

DSNG: XXX PLOTTED BY: $FILE$ $USER$ SCALE: $SCALE$ $DATE$ $TIME$

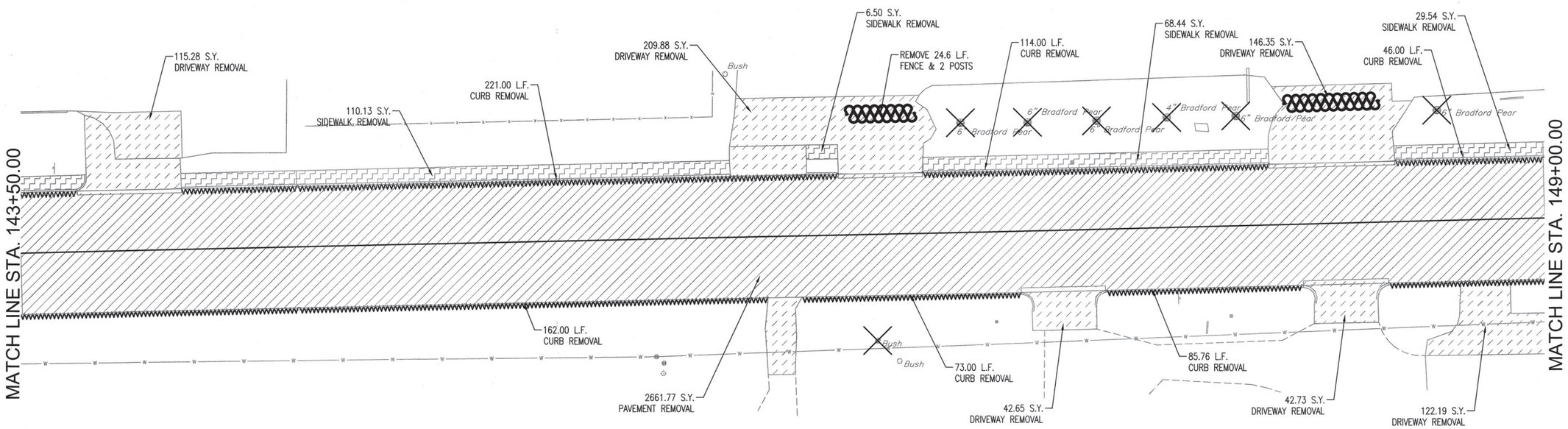

REMOVAL LEGEND

- CONCRETE
- ASPHALT
- DRIVEWAYS
- SIDEWALK
- TYPE I PCC PATCH SEE PLAN SHEETS
- CURB
- FLOWABLE FILL IN PIPE
- STRUCTURE/TREE REMOVAL
- REMOVE PIPE
- REMOVE FENCE

LICENSED PROFESSIONAL ENGINEER
JASON P. DICKMAN 27639
OKLAHOMA
07/19/2020

DEMOLITION PLAN 5

PROJECT NO. 144200

ARTERIAL STREET REHABILITATION AND WATERLINE REPLACEMENT – 36TH ST. N. – MLK BLVD TO PEORIA AVE.

CITY OF TULSA, OKLAHOMA
ENGINEERING SERVICES DEPARTMENT

PLANS AND ESTIMATES PREPARED BY: PEC PROFESSIONAL ENGINEERING CONSULTANTS, P.A. 1924 S. UTICA AVE., SUITE 1400 TULSA, OK 74104 918-664-5400 www.pec1.com

REVISION	BY	DATE

PLAN SCALE: 1" = 20'	DRAWN	BFS	01/2020
	DESIGNED	JPD	01/2020
	SURVEY		
PROFILE SCALE:	PROJ. MGR.		07/20
HORIZONTAL: 1" =	LEAD ENGR.		7/20
	FIELD MGR.		7/20/20
VERTICAL 1" =	RECOMMENDED DESIGN MANAGER		9-20

APPROVED:

CITY ENGINEER

FILE: DRAWING: DATE: 10/30/20

ATLAS PAGE NO: 218, 219, 281, 282 SHEET 46 OF 165 SHEETS

DSN#: XXX PLOTTED BY: $USER# SCALE: $SCALE# $DATE# $TIME#

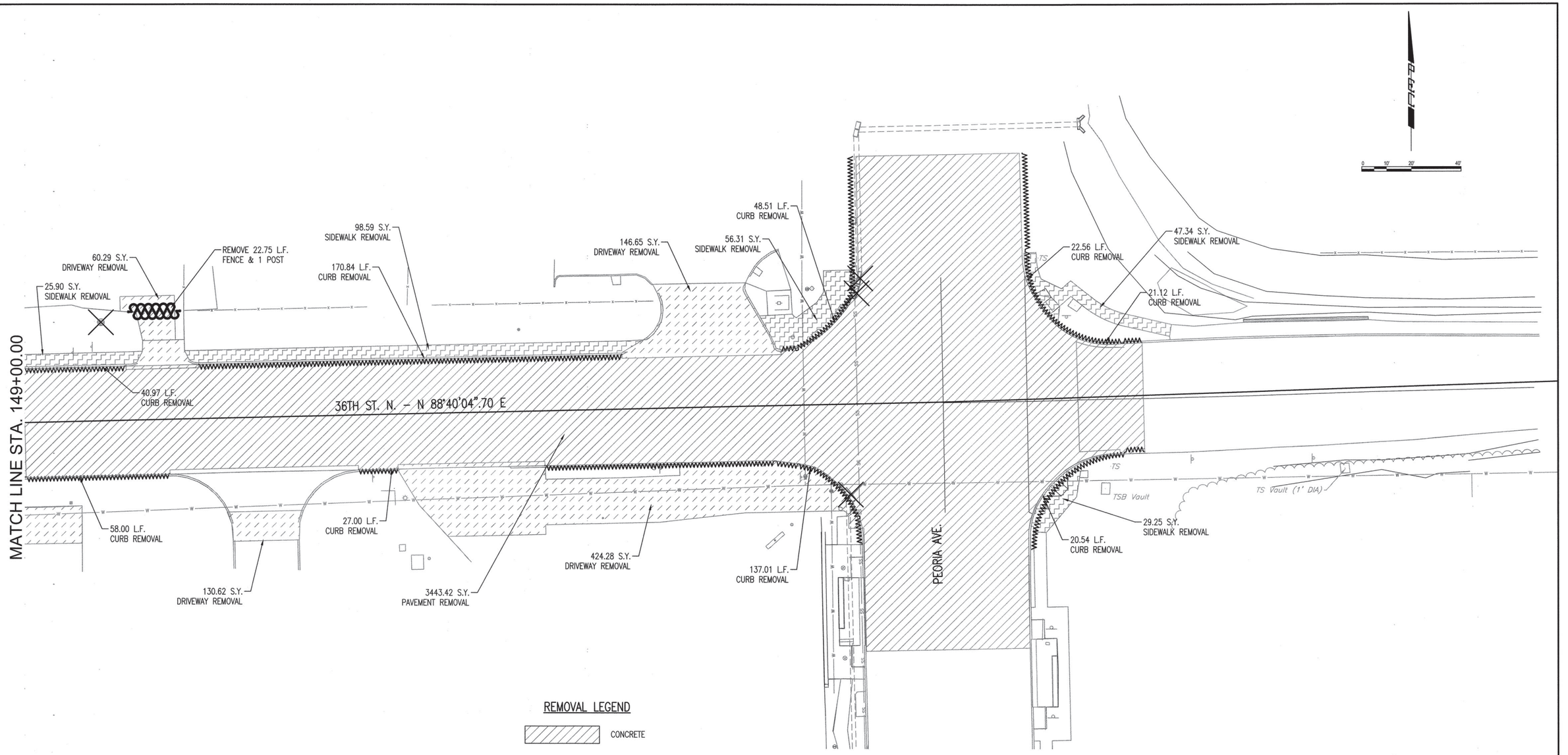

REMOVAL LEGEND

- CONCRETE
- ASPHALT
- DRIVEWAYS
- SIDEWALK
- TYPE I PCC PATCH SEE PLAN SHEETS
- CURB
- FLOWABLE FILL IN PIPE
- STRUCTURE/TREE REMOVAL
- REMOVE PIPE
- REMOVE FENCE

LICENSED PROFESSIONAL ENGINEER
JASON P. DICKMAN
27639
OKLAHOMA
07/19/2020

REVISION	BY	DATE

DEMOLITION PLAN 6

PROJECT NO. 144200

ARTERIAL STREET REHABILITATION AND WATERLINE REPLACEMENT – 36TH ST. N. – MLK BLVD TO PEORIA AVE.

CITY OF TULSA, OKLAHOMA
ENGINEERING SERVICES DEPARTMENT

PLANS AND ESTIMATES PREPARED BY: PEC PROFESSIONAL ENGINEERING CONSULTANTS, P.A. 1924 S. UTICA AVE., SUITE 1400 TULSA, OK 74104 918-664-5400 www.pec1.com

PLAN SCALE: 1" = 20'	DRAWN	BFS	01/2020	APPROVED:
	DESIGNED	JPD	01/2020	
	SURVEY			
PROFILE SCALE:	PROJ. MGR.		07/20	
HORIZONTAL: 1" =	LEAD ENGR.		7/20	
	FIELD MGR.		7/20	
VERTICAL 1" =	RECOMMENDED: DESIGN MANAGER		7-20	CITY ENGINEER
FILE:	DRAWING:			DATE: 10/30/20
ATLAS PAGE NO: 218, 219, 281, 282				SHEET 47 OF 165 SHEETS

DSNR: XXX PLOTTED BY: $USER$ SCALE: $SCALE$ $DATE$ $TIME$ $FILE$

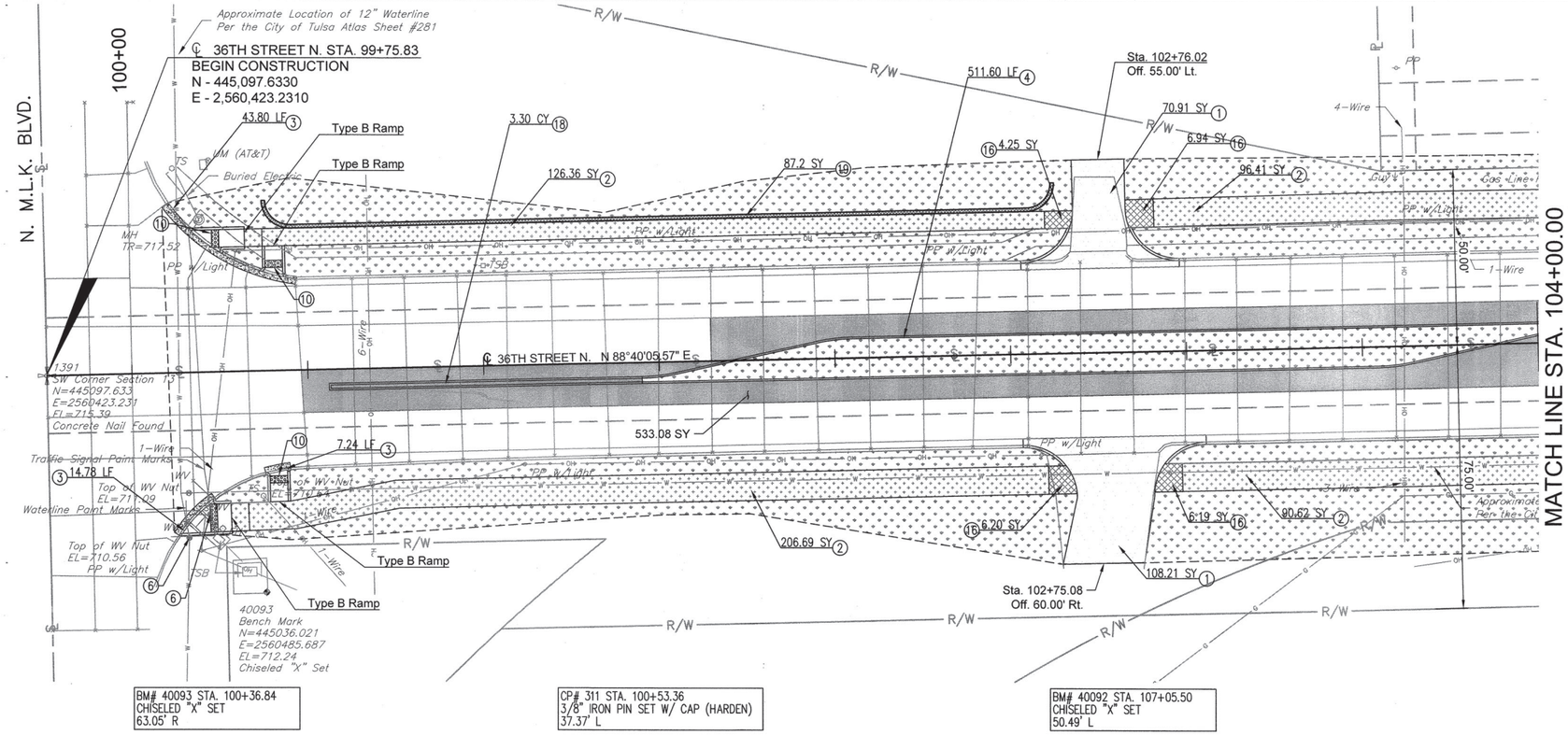

BM# 40093 STA. 100+36.84
CHISELED "X" SET
63.05' R

CP# 311 STA. 100+53.36
3/8" IRON PIN SET W/ CAP (HARDEN)
37.37' L

BM# 40092 STA. 107+05.50
CHISELED "X" SET
50.49' L

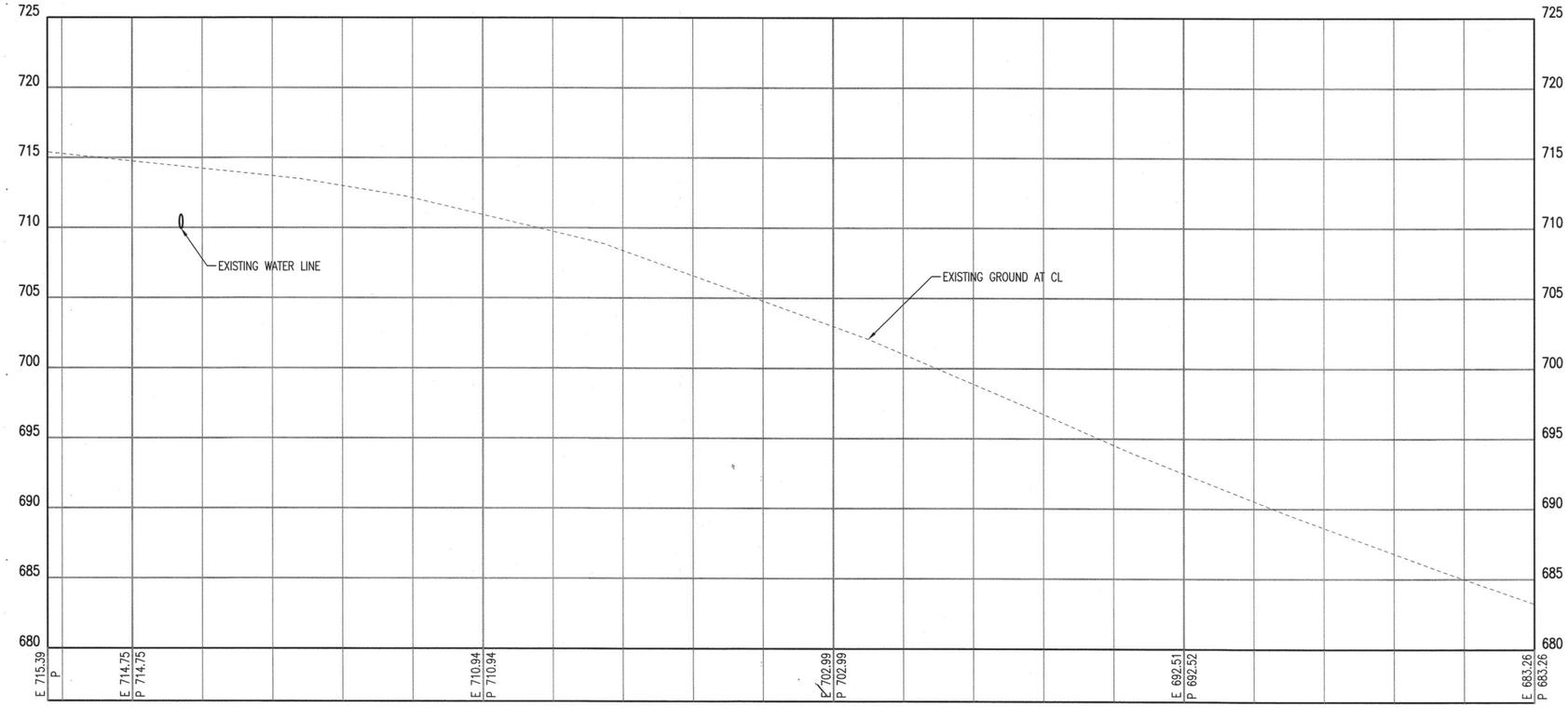

0 10' 20' 40'

LEGEND

- PCC PANEL REPLACEMENT
- CONSTRUCT PCC CURB
- CONSTRUCT PCC DRIVEWAY
- CONSTRUCT 4" PCC SIDEWALK
- CONSTRUCT 6" PCC SIDEWALK
- CONSTRUCT INLET APRON
- FULL DEPTH PCC PAVEMENT
- SODDING – SEE LANDSCAPING PLANS

1. PCC DRIVEWAY
2. PCC 4" SIDEWALK
3. PCC CURB 6" BARRIER CURB AND GUTTER
4. PCC CURB 8" BARRIER CURB AND GUTTER (REVERSE SLOPE AT MEDIANS)
5. STAMPED CONCRETE SIDEWALK
6. ADJUST VALVE TO GRADE
7. ADJUST METER TO GRADE
8. ADJUST MANHOLE TO GRADE
9. SAW CUT
10. TACTILE WARNING DEVICE
11. REMOVE & RESET EXIST. SIGN
12. REMOVE & REPLACE EXIST. SIGN
13. PROPOSED SIGNAL POLE
14. PROPOSED RECTANGUAL RAPID-FLASH BEACON
15. PROPOSED WATERLINE
16. PCC 6" SIDEWALK
17. TYPE 1 PCC PATCH
18. CLASS A CONCRETE
19. MBW RETAINING WALL

BEFORE YOU DIG 811 1-800-522-OKIE CALL OKIE

LICENSED PROFESSIONAL ENGINEER JASON P. DICKMAN 27639 OKLAHOMA
07/19/2020

REVISION	BY	DATE

PLAN & PROFILE 1

PROJECT NO. 144200

ARTERIAL STREET REHABILITATION AND WATERLINE REPLACEMENT – 36TH ST. N. – MLK BLVD TO PEORIA AVE.

CITY OF TULSA, OKLAHOMA
ENGINEERING SERVICES DEPARTMENT

PLANS AND ESTIMATES PREPARED BY: PEC PROFESSIONAL ENGINEERING CONSULTANTS, P.A. 1924 S. UTICA AVE., SUITE 1400 TULSA, OK 74104 918-664-5400 www.pec1.com

PLAN SCALE: 1" = 20'	DRAWN	BFS	01/2020	APPROVED:
	DESIGNED	JPD	01/2020	
	SURVEY			
PROFILE SCALE:	PROJ. MGR.			
HORIZONTAL: 1" = 20'	LEAD ENGR.			
	FIELD MGR.			
VERTICAL 1" = 5'	RECOMMENDED: DESIGN MANAGER			CITY ENGINEER
FILE:	DRAWING:			DATE: 10/30/20
ATLAS PAGE NO: 218, 219, 281, 282				SHEET 48 OF 165 SHEETS

DGN: XXX PLOTTED BY: $USER$ SCALE: $SCALE$ $DATE$ $TIME$ $FILE$

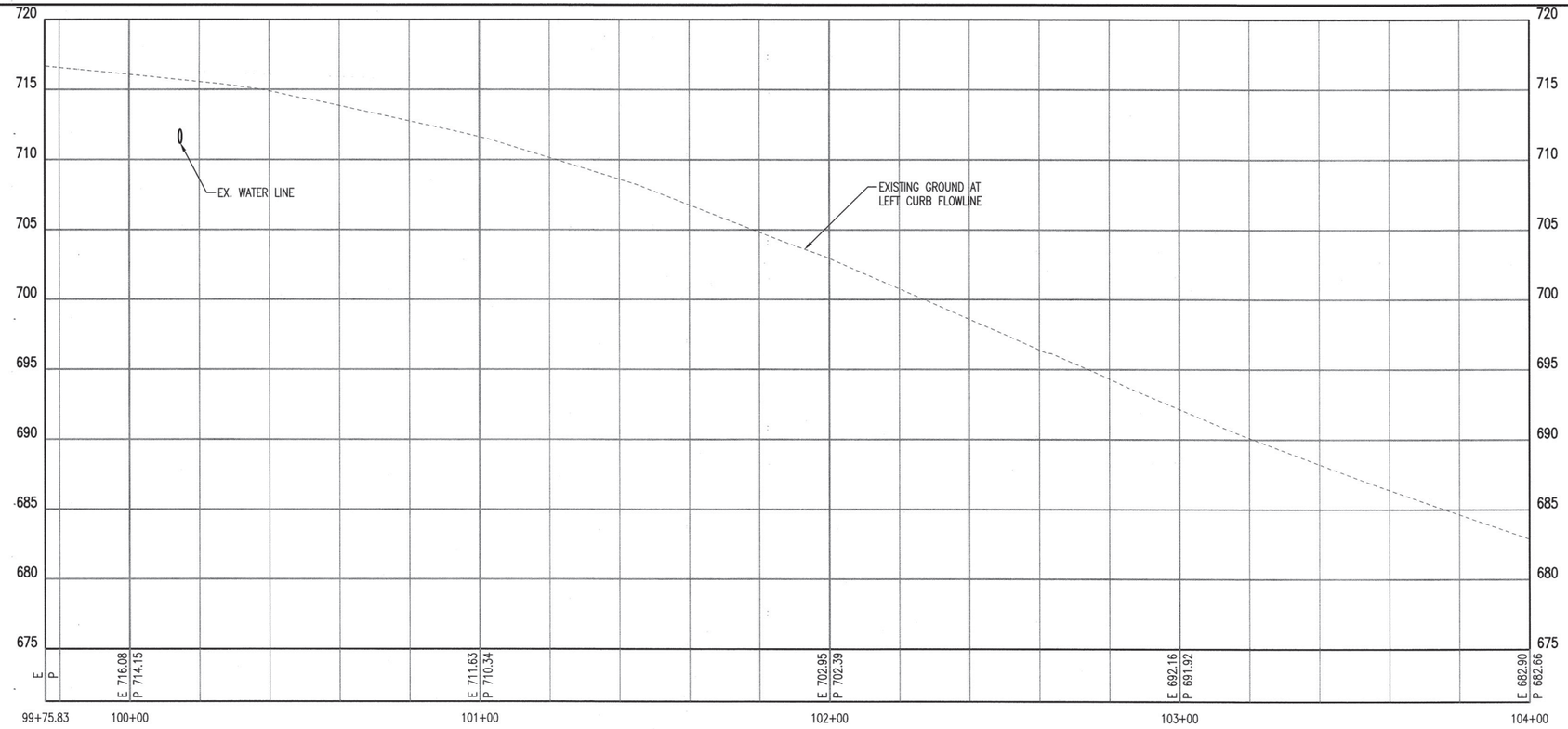

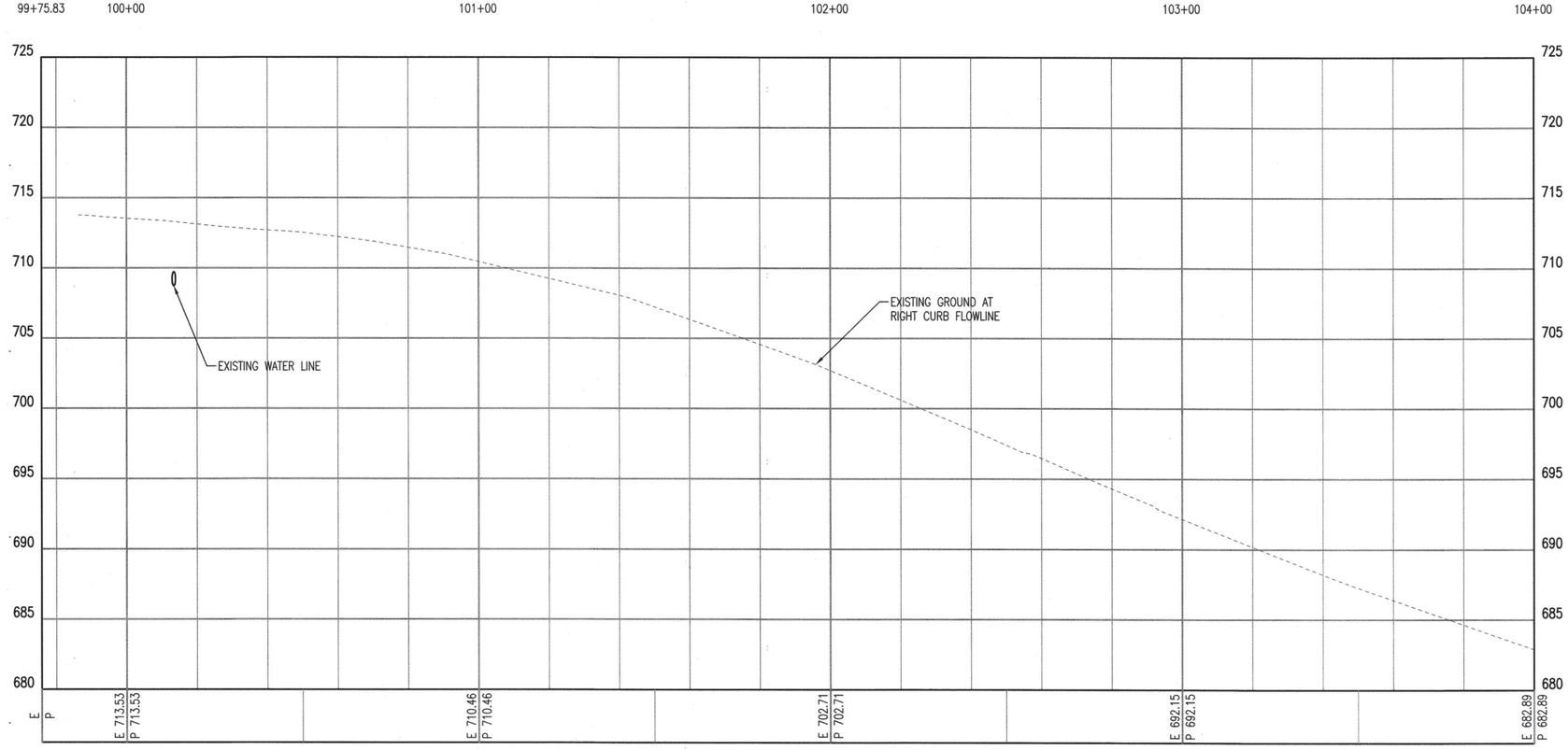

DSN#: XXX PLOTTED BY: #USER# SCALE: #SCALE# #DATE# #TIME#

BEFORE YOU DIG 811 1-800-522-OKIE CALL OKIE

LICENSED PROFESSIONAL ENGINEER
JASON P. DICKMAN 27639
OKLAHOMA
07/19/2020

REVISION	BY	DATE

CURB PROFILE 1

PROJECT NO. 144200

ARTERIAL STREET REHABILITATION AND WATERLINE REPLACEMENT – 36TH ST. N. – MLK BLVD TO PEORIA AVE.

CITY OF TULSA, OKLAHOMA
ENGINEERING SERVICES DEPARTMENT

PLANS AND ESTIMATES PREPARED BY: PEC PROFESSIONAL ENGINEERING CONSULTANTS, P.A. 1924 S. UTICA AVE., SUITE 1400 TULSA, OK 74104 918-884-5400 www.pec1.com

PLAN SCALE: 1" =	DRAWN	BFS	01/2020
	DESIGNED	JPD	01/2020
	SURVEY		
PROFILE SCALE:	PROJ. MGR.	MAS	07/20
	LEAD ENGR.	JPD	7/20
HORIZONTAL: 1" = 20'	FIELD MGR.	BMS	8/20
VERTICAL 1" = 5'	RECOMMENDED DESIGN MANAGER	MAS	9-20

APPROVED: CITY ENGINEER

FILE: DRAWING: DATE: 10/30/20

ATLAS PAGE NO: 218, 219, 281, 282 SHEET 49 OF 165 SHEETS

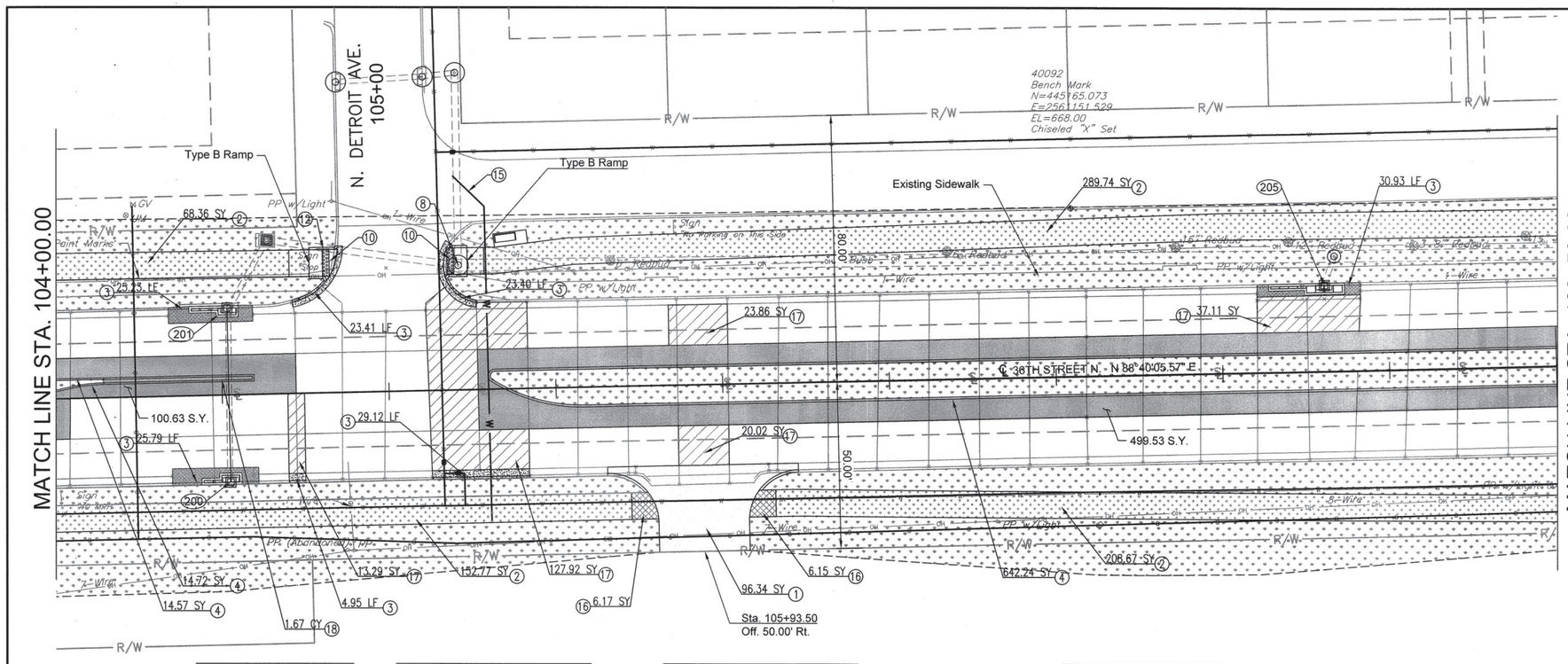

BM# 40092 STA. 107+05.50	CP# 310 STA. 105+35.45	CP# 31455 STA. 105+26.27	BM# 320 STA. 111+71.65
CHISELED "X" SET	3/8" IRON PIN SET W/ CAP (HARDEN)	MAGIC MARKER "X" SET	CHISELED "X" SET
50.49' L	35.34' R	49.99' L	67.81' L

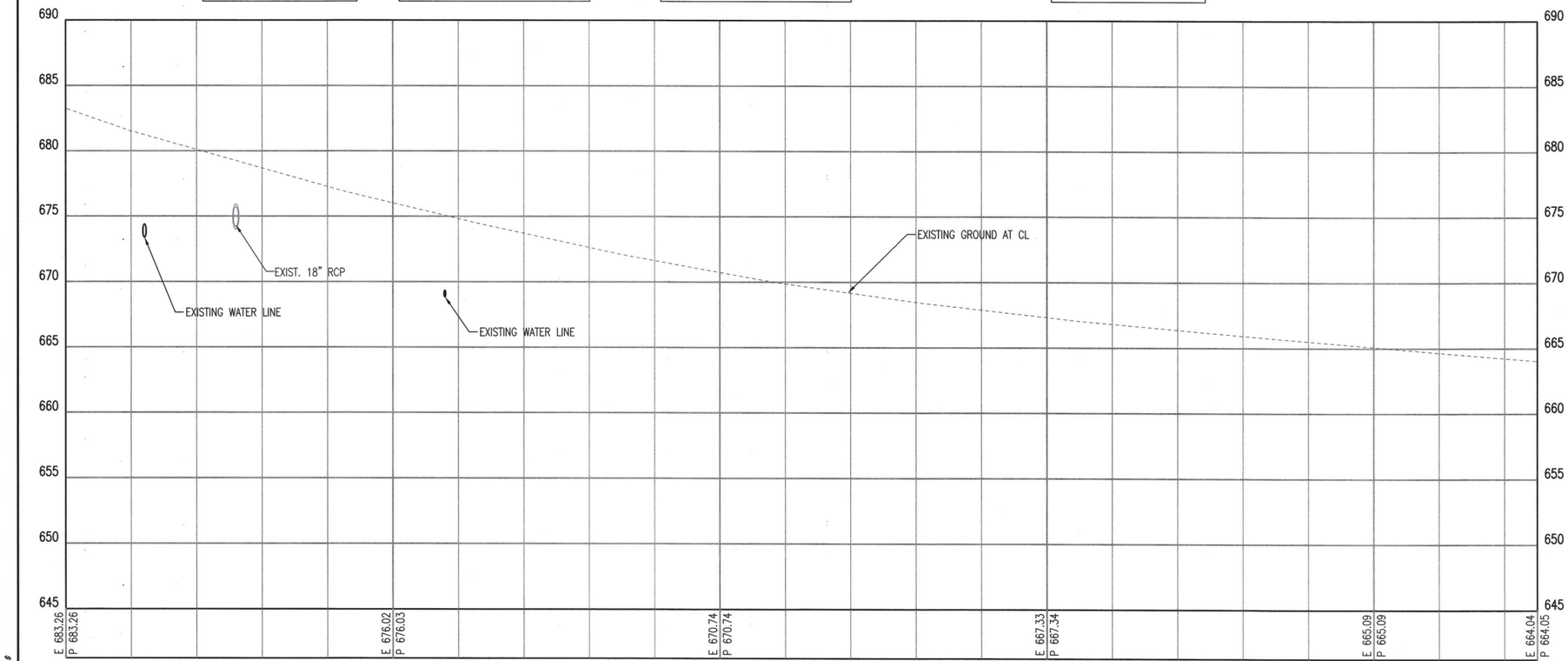

LEGEND

- PCC PANEL REPLACEMENT
- CONSTRUCT PCC CURB
- CONSTRUCT PCC DRIVEWAY
- CONSTRUCT 4" PCC SIDEWALK
- CONSTRUCT 6" PCC SIDEWALK
- CONSTRUCT INLET APRON
- FULL DEPTH PCC PAVEMENT
- SODDING – SEE LANDSCAPING PLANS

1. PCC DRIVEWAY
2. PCC 4" SIDEWALK
3. PCC CURB 6" BARRIER CURB AND GUTTER
4. PCC CURB 8" BARRIER CURB AND GUTTER (REVERSE SLOPE AT MEDIANS)
5. STAMPED CONCRETE SIDEWALK
6. ADJUST VALVE TO GRADE
7. ADJUST METER TO GRADE
8. ADJUST MANHOLE TO GRADE
9. SAW CUT
10. TACTILE WARNING DEVICE
11. REMOVE & RESET EXIST. SIGN
12. REMOVE & REPLACE EXIST. SIGN
13. PROPOSED SIGNAL POLE
14. PROPOSED RECTANGUAL RAPID–FLASH BEACON
15. PROPOSED WATERLINE
16. PCC 6" SIDEWALK
17. TYPE 1 PCC PATCH
18. CLASS A CONCRETE
19. MBW RETAINING WALL

BEFORE YOU DIG 811 1-800-522-OKIE CALL OKIE

LICENSED PROFESSIONAL ENGINEER JASON P. DICKMAN 27639 OKLAHOMA
07/19/2020

REVISION	BY	DATE

PLAN & PROFILE 2

PROJECT NO. 144200

ARTERIAL STREET REHABILITATION AND WATERLINE REPLACEMENT – 36TH ST. N. – MLK BLVD TO PEORIA AVE.

CITY OF TULSA, OKLAHOMA
ENGINEERING SERVICES DEPARTMENT

PLANS AND ESTIMATES PREPARED BY: PEC PROFESSIONAL ENGINEERING CONSULTANTS, P.A. 1924 S. UTICA AVE., SUITE 1400 TULSA, OK 74104 918-684-5400 www.pec1.com

PLAN SCALE: 1" = 20'	DRAWN	BFS	01/2020	APPROVED:
	DESIGNED	JPD	01/2020	
	SURVEY			
PROFILE SCALE:	PROJ. MGR.		07/20	
	LEAD ENGR.		7/20	
HORIZONTAL: 1" = 20'	FIELD MGR.		8/20	
VERTICAL 1" = 5'	RECOMMENDED: DESIGN MANAGER		9-20	CITY ENGINEER
FILE:	DRAWING:			DATE: 10/30/20
ATLAS PAGE NO: 218, 219, 281, 282				SHEET 50 OF 165 SHEETS

$TIME$ $DATE$ $SCALE$ SCALE: $USER$ DGN: XXX PLOTTED BY: $PLEL$

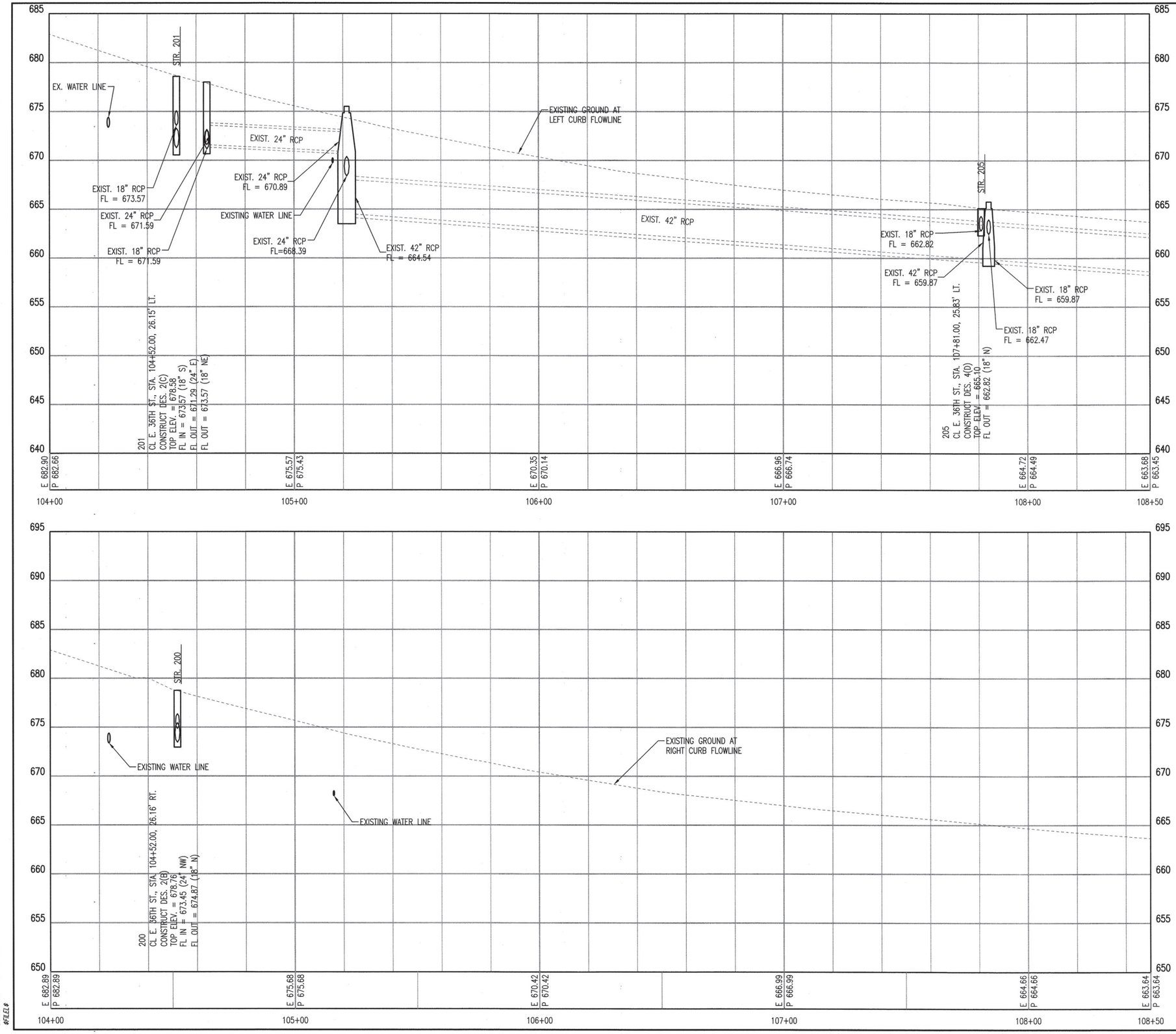

$TIME$
$DATE$
$SCALE$
SCALE:
$USER$
PLOTTED BY:
DSNR: XXX
$FILE$

BEFORE YOU DIG
811
1-800-522-OKIE
CALL OKIE

LICENSED PROFESSIONAL ENGINEER
JASON P. DICKMAN
27639
OKLAHOMA
07/19/2020

REVISION	BY	DATE

CURB PROFILE 2

PROJECT NO. 144200

ARTERIAL STREET REHABILITATION AND WATERLINE REPLACEMENT – 36TH ST. N. – MLK BLVD TO PEORIA AVE.

CITY OF TULSA, OKLAHOMA
ENGINEERING SERVICES DEPARTMENT

PLANS AND ESTIMATES PREPARED BY:

PEC PROFESSIONAL ENGINEERING CONSULTANTS, P.A.
1924 S. UTICA AVE., SUITE 1400
TULSA, OK 74104 918-684-5400 www.pec1.com

PLAN SCALE: 1" =	DRAWN	BFS	01/2020
	DESIGNED	JPD	01/2020
	SURVEY		
PROFILE SCALE:	PROJ. MGR.		07/20
HORIZONTAL: 1" = 20'	LEAD ENGR.		7/20
	FIELD MGR.		
VERTICAL 1" = 5'	RECOMMENDED: DESIGN MANAGER		9.20

APPROVED:

CITY ENGINEER

FILE: DRAWING: DATE: 10/30/20

ATLAS PAGE NO: 218, 219, 281, 282 SHEET 51 OF 165 SHEETS

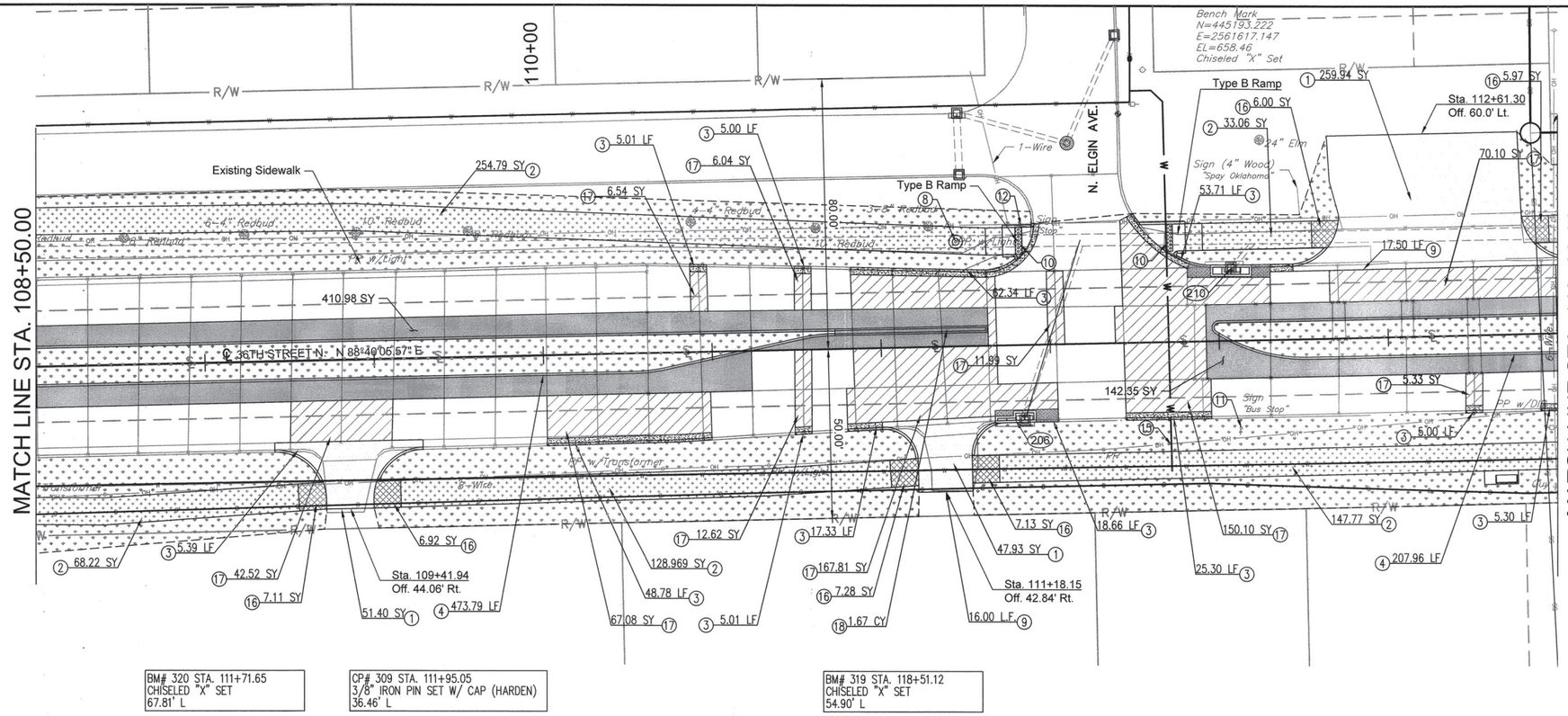

BM# 320 STA. 111+71.65
CHISELED "X" SET
67.81' L

CP# 309 STA. 111+95.05
3/8" IRON PIN SET W/ CAP (HARDEN)
36.46' L

BM# 319 STA. 118+51.12
CHISELED "X" SET
54.90' L

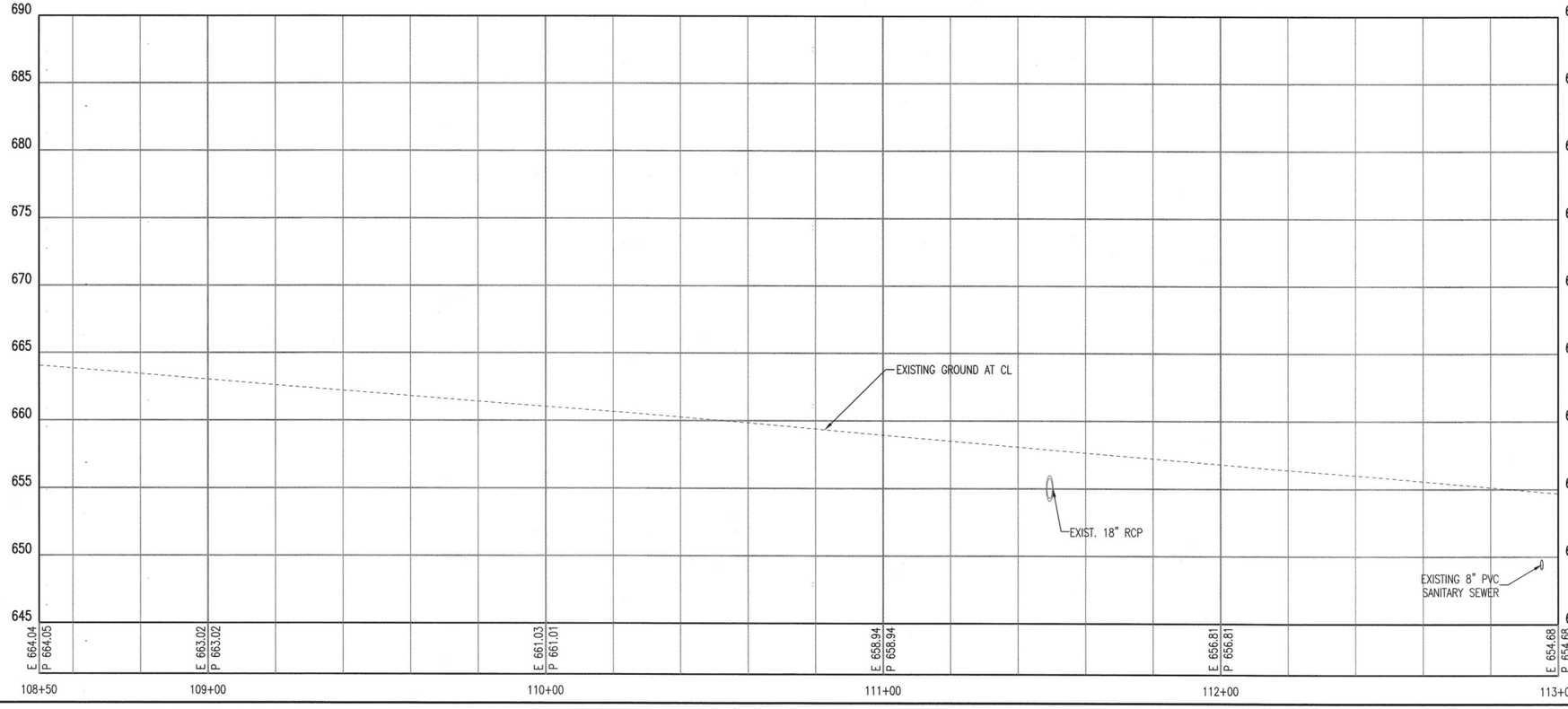



LEGEND

- PCC PANEL REPLACEMENT
- CONSTRUCT PCC CURB
- CONSTRUCT PCC DRIVEWAY
- CONSTRUCT 4" PCC SIDEWALK
- CONSTRUCT 6" PCC SIDEWALK
- CONSTRUCT INLET APRON
- FULL DEPTH PCC PAVEMENT
- SODDING – SEE LANDSCAPING PLANS

1. PCC DRIVEWAY
2. PCC 4" SIDEWALK
3. PCC CURB 6" BARRIER CURB AND GUTTER
4. PCC CURB 8" BARRIER CURB AND GUTTER (REVERSE SLOPE AT MEDIANS)
5. STAMPED CONCRETE SIDEWALK
6. ADJUST VALVE TO GRADE
7. ADJUST METER TO GRADE
8. ADJUST MANHOLE TO GRADE
9. SAW CUT
10. TACTILE WARNING DEVICE
11. REMOVE & RESET EXIST. SIGN
12. REMOVE & REPLACE EXIST. SIGN
13. PROPOSED SIGNAL POLE
14. PROPOSED RECTANGUAL RAPID-FLASH BEACON
15. PROPOSED WATERLINE
16. PCC 6" SIDEWALK
17. TYPE 1 PCC PATCH
18. CLASS A CONCRETE
19. MBW RETAINING WALL

BEFORE YOU DIG 811 1-800-522-OKIE CALL OKIE

LICENSED PROFESSIONAL ENGINEER
JASON P. DICKMAN 27639
OKLAHOMA
07/19/2020

REVISION	BY	DATE

PLAN & PROFILE 3

PROJECT NO. 144200

ARTERIAL STREET REHABILITATION AND WATERLINE REPLACEMENT – 36TH ST. N. – MLK BLVD TO PEORIA AVE.

CITY OF TULSA, OKLAHOMA
ENGINEERING SERVICES DEPARTMENT

PLANS AND ESTIMATES PREPARED BY: PEC PROFESSIONAL ENGINEERING CONSULTANTS, P.A. 1924 S. UTICA AVE., SUITE 1400 TULSA, OK 74104 918-684-5400 www.pec1.com

PLAN SCALE: 1" = 20'	DRAWN	BFS	01/2020
	DESIGNED	JPD	01/2020
	SURVEY		
PROFILE SCALE:	PROJ. MGR.		07/20
HORIZONTAL: 1" = 20'	LEAD ENGR.		7/20
	FIELD MGR.		8/20
VERTICAL 1" = 5'	RECOMMENDED: DESIGN MANAGER		9.20

APPROVED: CITY ENGINEER

FILE: DRAWING:

DATE: 10/30/20

ATLAS PAGE NO: 218, 219, 281, 282

SHEET 52 OF 165 SHEETS

DGN#: XXX PLOTTED BY: $USER# SCALE: $SCALE# $DATE# $TIME#
$FILE#

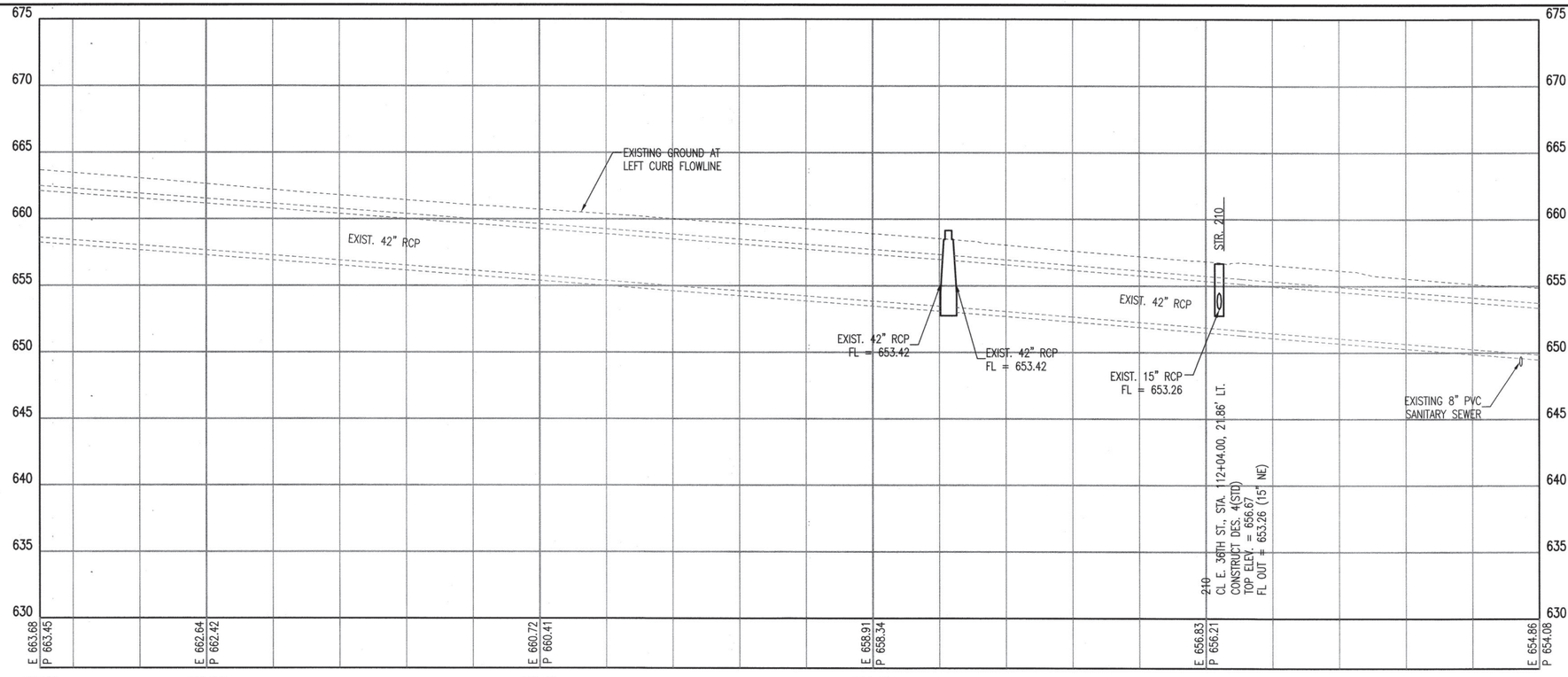

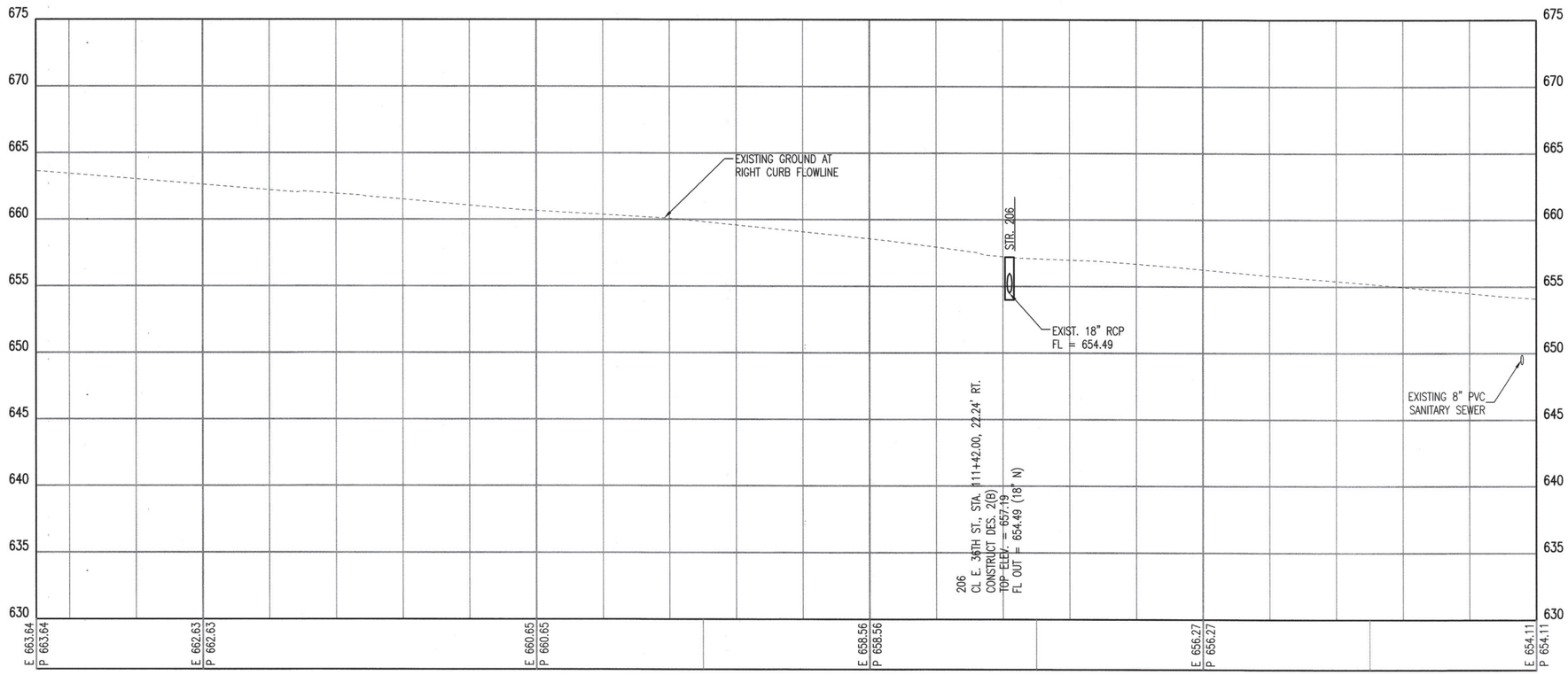

DSNR: KKK PLOTTED BY: $USER$ SCALE: $SCALE$ $DATE$ $TIME$
$FILE$

BEFORE YOU DIG
811
1-800-522-OKIE
CALL OKIE

LICENSED PROFESSIONAL ENGINEER
JASON P. DICKMAN
27639
OKLAHOMA
07/19/2020

REVISION	BY	DATE

CURB PROFILE 3

PROJECT NO. 144200

ARTERIAL STREET REHABILITATION AND WATERLINE REPLACEMENT – 36TH ST. N. – MLK BLVD TO PEORIA AVE.

CITY OF TULSA, OKLAHOMA
ENGINEERING SERVICES DEPARTMENT

PLANS AND ESTIMATES PREPARED BY: PEC PROFESSIONAL ENGINEERING CONSULTANTS, P.A. 1924 S. UTICA AVE., SUITE 1400 TULSA, OK 74104 918-664-5400 www.pec1.com

PLAN SCALE: 1" =	DRAWN	BFS	01/2020	APPROVED:
	DESIGNED	JPD	01/2020	
	SURVEY			
PROFILE SCALE:	PROJ. MGR.		07/20	
HORIZONTAL: 1" = 20'	LEAD ENGR.		7/20	
	FIELD MGR.			
VERTICAL 1" = 5'	RECOMMENDED: DESIGN MANAGER		7/21 9-20	CITY ENGINEER
FILE:	DRAWING:			DATE: 10/30/20
ATLAS PAGE NO: 218, 219, 281, 282				SHEET 53 OF 165 SHEETS

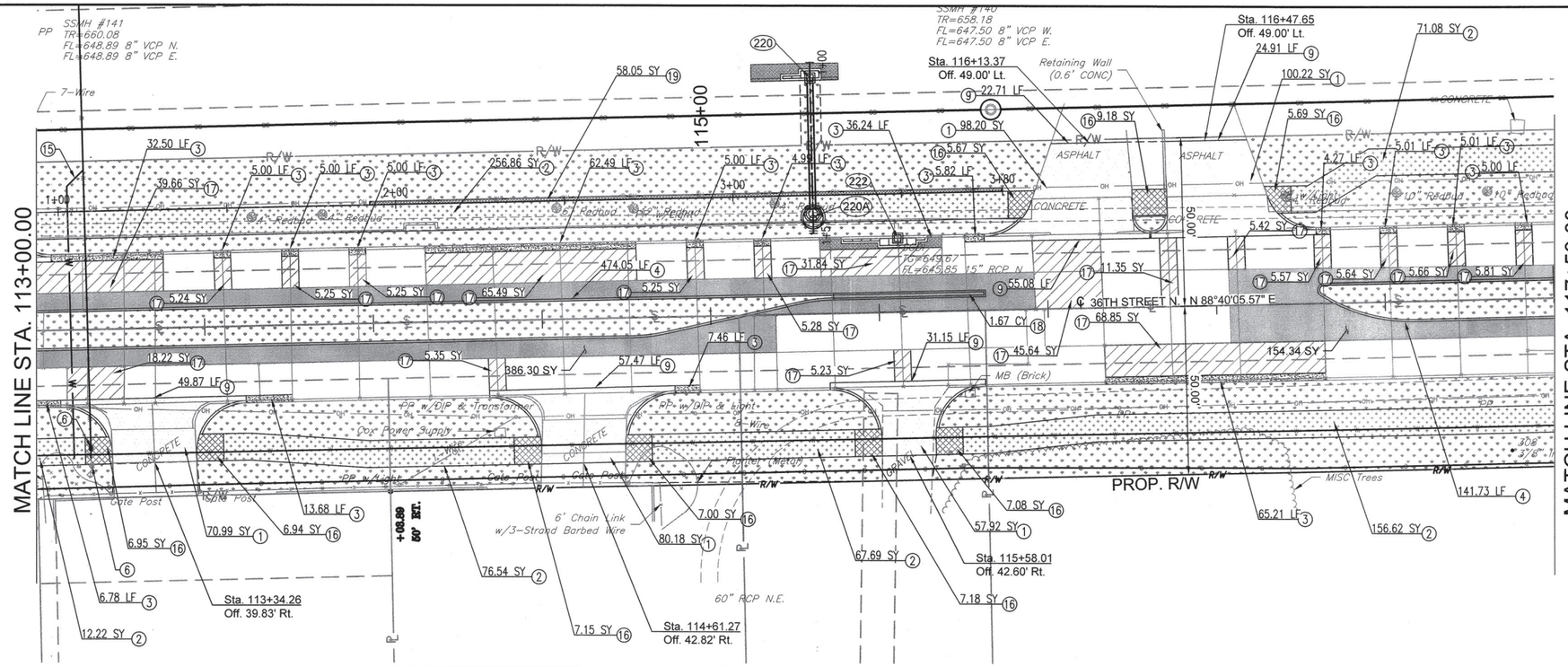

BM# 320 STA. 111+71.65
CHISELED "X" SET
67.81' L

CP# 308 STA. 117+36.65
3/8" IRON PIN SET W/ CAP (HARDEN)
44.92' R

BM# 319 STA. 118+51.12
CHISELED "X" SET
54.90' L

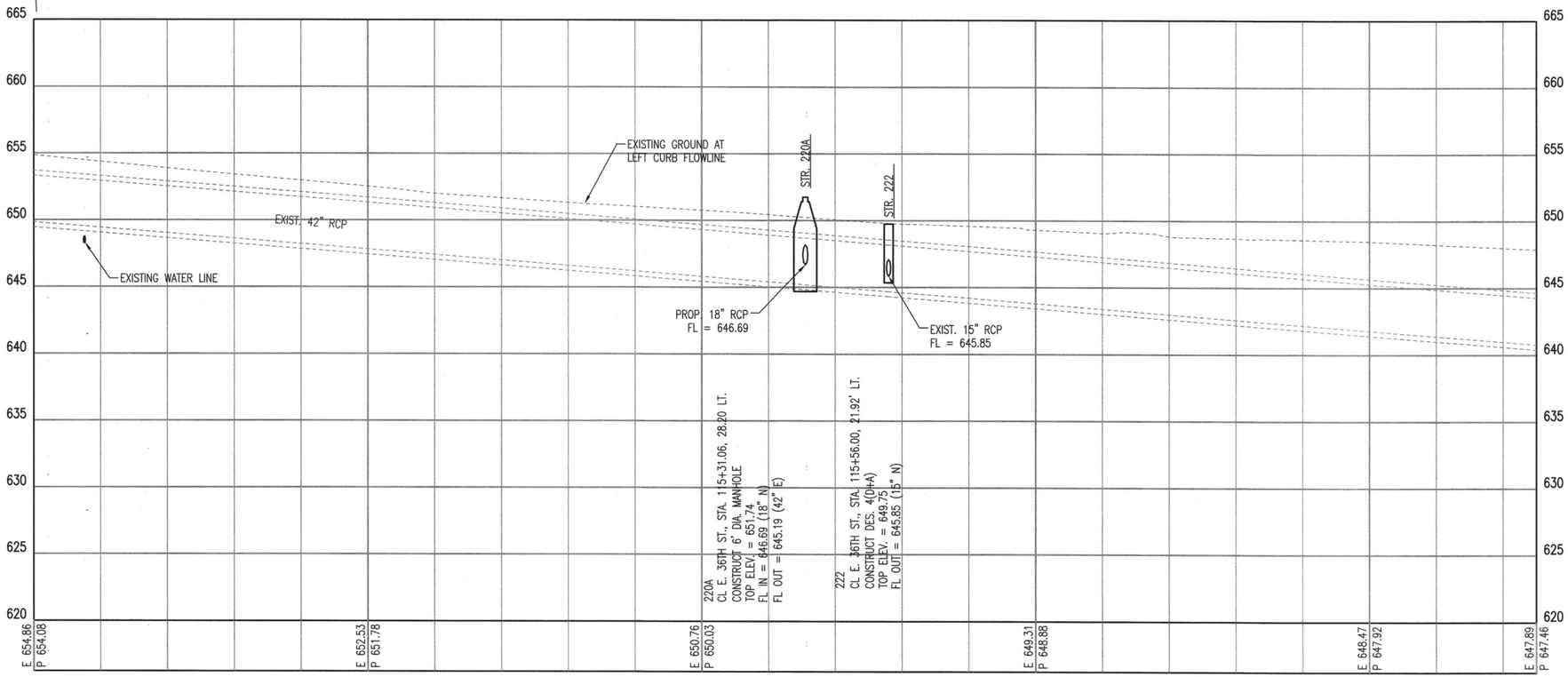

LEGEND

- PCC PANEL REPLACEMENT
- CONSTRUCT PCC CURB
- CONSTRUCT PCC DRIVEWAY
- CONSTRUCT 4" PCC SIDEWALK
- CONSTRUCT 6" PCC SIDEWALK
- CONSTRUCT INLET APRON
- FULL DEPTH PCC PAVEMENT
- SODDING – SEE LANDSCAPING PLANS

1. PCC DRIVEWAY
2. PCC 4" SIDEWALK
3. PCC CURB 6" BARRIER CURB AND GUTTER
4. PCC CURB 8" BARRIER CURB AND GUTTER (REVERSE SLOPE AT MEDIANS)
5. STAMPED CONCRETE SIDEWALK
6. ADJUST VALVE TO GRADE
7. ADJUST METER TO GRADE
8. ADJUST MANHOLE TO GRADE
9. SAW CUT
10. TACTILE WARNING DEVICE
11. REMOVE & RESET EXIST. SIGN
12. REMOVE & REPLACE EXIST. SIGN
13. PROPOSED SIGNAL POLE
14. PROPOSED RECTANGUAL RAPID–FLASH BEACON
15. PROPOSED WATERLINE
16. PCC 6" SIDEWALK
17. TYPE 1 PCC PATCH
18. CLASS A CONCRETE
19. MBW RETAINING WALL

BEFORE YOU DIG
811
1-800-522-OKIE
CALL OKIE

LICENSED PROFESSIONAL ENGINEER
JASON P. DICKMAN
27639
OKLAHOMA
07/19/2020

REVISION	BY	DATE

PLAN & PROFILE 4

PROJECT NO. 144200

ARTERIAL STREET REHABILITATION AND WATERLINE REPLACEMENT – 36TH ST. N. – MLK BLVD TO PEORIA AVE.

CITY OF TULSA, OKLAHOMA
ENGINEERING SERVICES DEPARTMENT

PLANS AND ESTIMATES PREPARED BY: PEC — PROFESSIONAL ENGINEERING CONSULTANTS, P.A. 1924 S. UTICA AVE., SUITE 1400 TULSA, OK 74104 918-664-5400 www.pec1.com

PLAN SCALE: 1" = 20'	DRAWN	BFS	01/2020	APPROVED:
	DESIGNED	JPD	01/2020	
	SURVEY			
PROFILE SCALE:	PROJ. MGR.			
HORIZONTAL: 1" = 20'	LEAD ENGR.			
	FIELD MGR.			
VERTICAL 1" = 5'	RECOMMENDED: DESIGN MANAGER			CITY ENGINEER
FILE:	DRAWING:			DATE: 10/30/20
ATLAS PAGE NO: 218, 219, 281, 282				SHEET 54 OF 165 SHEETS

DSNR: XXX PLOTTED BY: $USER$ SCALE: $SCALE$ $DATE$ $TIME$ $FILE$

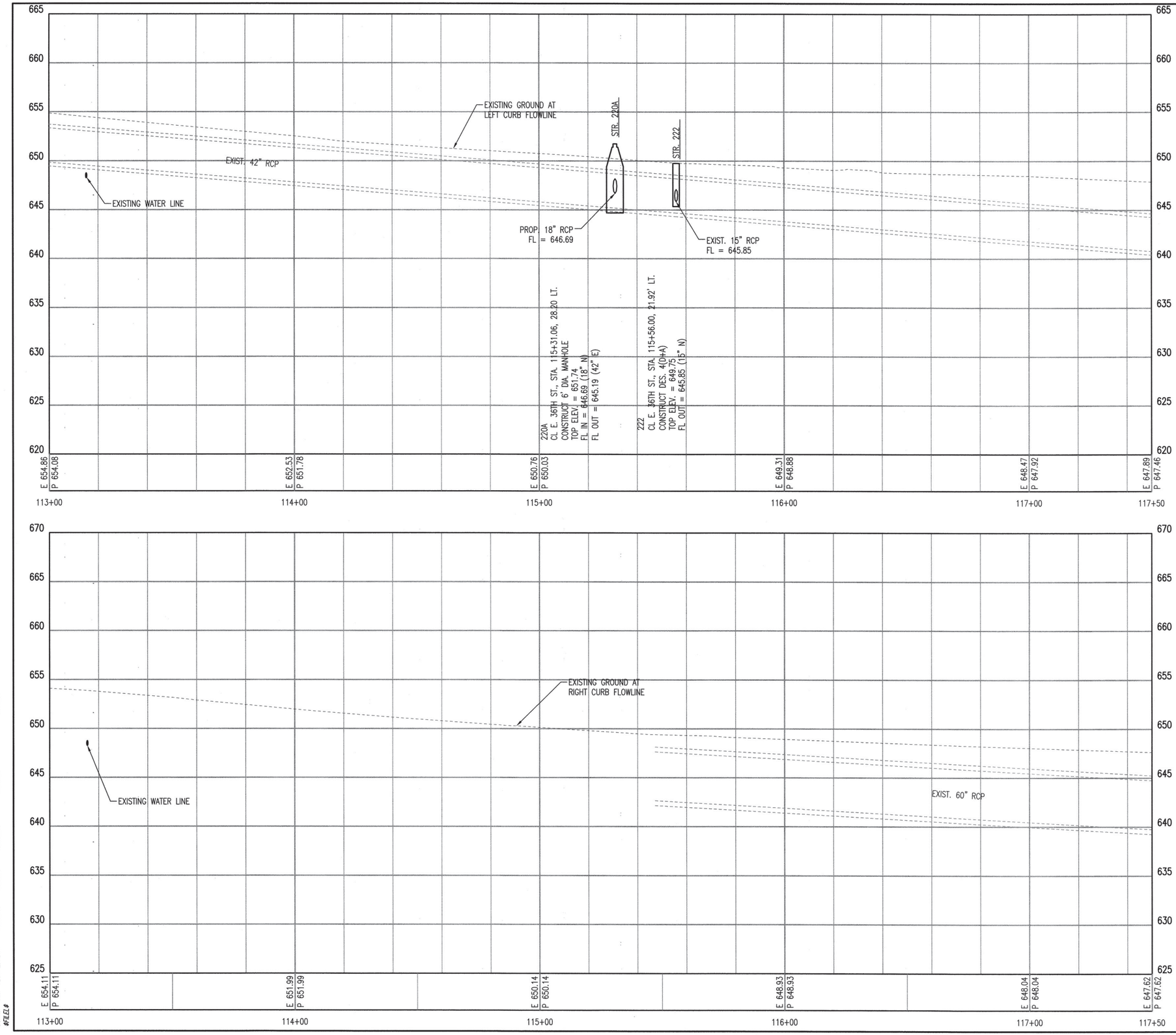

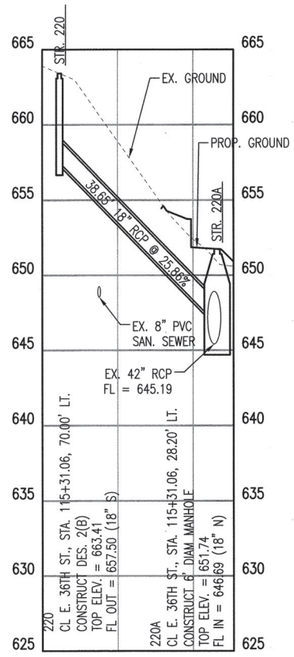

STORM SEWER PROFILE
220 TO 220A

BEFORE YOU DIG 1-800-522-OKIE CALL OKIE

LICENSED PROFESSIONAL ENGINEER JASON P. DICKMAN 27639 OKLAHOMA
07/19/2020

CURB PROFILE 4

PROJECT NO. 144200

ARTERIAL STREET REHABILITATION AND WATERLINE REPLACEMENT – 36TH ST. N. – MLK BLVD TO PEORIA AVE.

CITY OF TULSA, OKLAHOMA
ENGINEERING SERVICES DEPARTMENT

PLANS AND ESTIMATES PREPARED BY: PEC PROFESSIONAL ENGINEERING CONSULTANTS, P.A. 1924 S. UTICA AVE., SUITE 1400 TULSA, OK 74104 918-664-5400 www.pec1.com

REVISION	BY	DATE

PLAN SCALE: 1" =
HORIZONTAL: 1" = 20'
VERTICAL: 1" = 5'

DRAWN	BFS	01/2020
DESIGNED	JPD	01/2020
SURVEY		
PROJ. MGR.		
LEAD ENGR.		
FIELD MGR.		
RECOMMENDED: DESIGN MANAGER		

APPROVED:
CITY ENGINEER
DATE: 10/30/20
FILE: DRAWING:
ATLAS PAGE NO: 218, 219, 281, 282
SHEET 55 OF 165 SHEETS

DSNR: XXX PLOTTED BY: $FILE$ $USER$ SCALE: $SCALE$ $DATE$ $TIME$

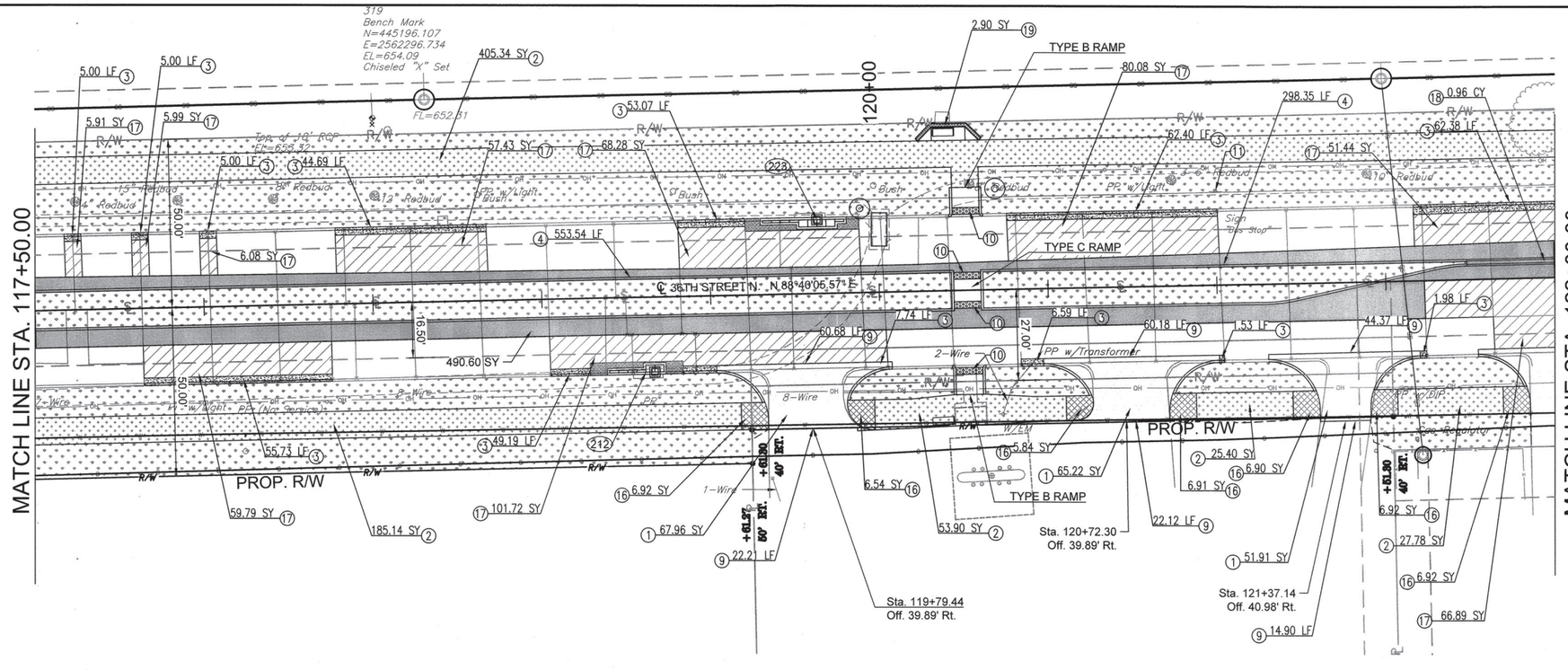

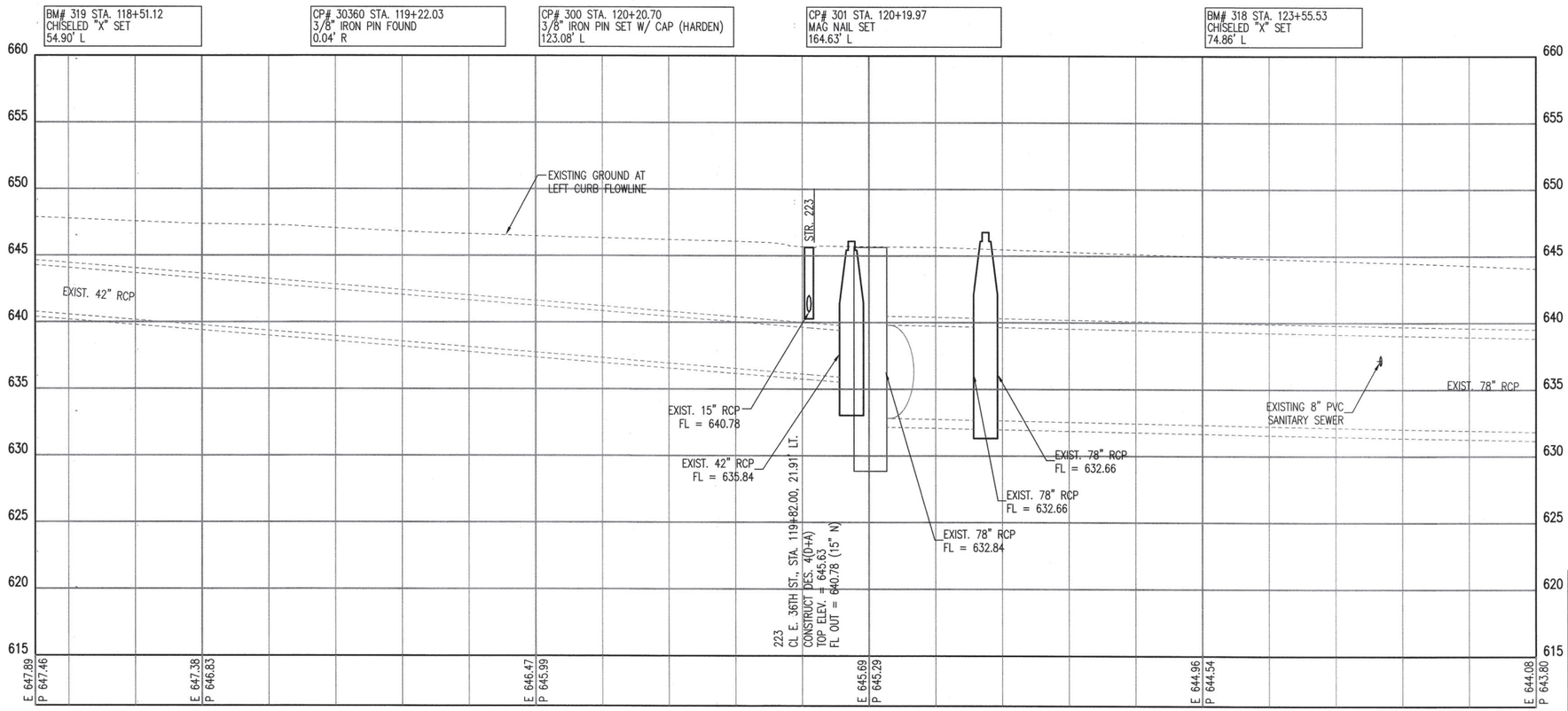

LEGEND

- PCC PANEL REPLACEMENT
- CONSTRUCT PCC CURB
- CONSTRUCT PCC DRIVEWAY
- CONSTRUCT 4" PCC SIDEWALK
- CONSTRUCT 6" PCC SIDEWALK
- CONSTRUCT INLET APRON
- FULL DEPTH PCC PAVEMENT
- SODDING – SEE LANDSCAPING PLANS

1. PCC DRIVEWAY
2. PCC 4" SIDEWALK
3. PCC CURB 6" BARRIER CURB AND GUTTER
4. PCC CURB 8" BARRIER CURB AND GUTTER (REVERSE SLOPE AT MEDIANS)
5. STAMPED CONCRETE SIDEWALK
6. ADJUST VALVE TO GRADE
7. ADJUST METER TO GRADE
8. ADJUST MANHOLE TO GRADE
9. SAW CUT
10. TACTILE WARNING DEVICE
11. REMOVE & RESET EXIST. SIGN
12. REMOVE & REPLACE EXIST. SIGN
13. PROPOSED SIGNAL POLE
14. PROPOSED RECTANGUAL RAPID–FLASH BEACON
15. PROPOSED WATERLINE
16. PCC 6" SIDEWALK
17. TYPE 1 PCC PATCH
18. CLASS A CONCRETE
19. MBW RETAINING WALL

BEFORE YOU DIG 811 1-800-522-OKIE CALL OKIE

JASON P. DICKMAN 27639 LICENSED PROFESSIONAL ENGINEER OKLAHOMA
07/19/2020

PLAN & PROFILE 5

PROJECT NO. 144200

ARTERIAL STREET REHABILITATION AND WATERLINE REPLACEMENT – 36TH ST. N. – MLK BLVD TO PEORIA AVE.

CITY OF TULSA, OKLAHOMA
ENGINEERING SERVICES DEPARTMENT

PLANS AND ESTIMATES PREPARED BY: PEC PROFESSIONAL ENGINEERING CONSULTANTS, P.A. 1924 S. UTICA AVE., SUITE 1400 TULSA, OK 74104 918-664-5400 www.pec1.com

REVISION	BY	DATE

PLAN SCALE: 1" = 20'
PROFILE SCALE: HORIZONTAL: 1" = 20' VERTICAL 1" = 5'

DRAWN	BFS	01/2020
DESIGNED	JPD	01/2020
SURVEY		
PROJ. MGR.		
LEAD ENGR.		
FIELD MGR.		
RECOMMENDED: DESIGN MANAGER		

APPROVED: CITY ENGINEER

FILE: DRAWING: DATE: 10/30/20

ATLAS PAGE NO: 218, 219, 281, 282 SHEET 56 OF 165 SHEETS

$TIME$ $DATE$ $SCALE$ $USER$ SCALE: PLOTTED BY: DSNR: XXX $FILE$

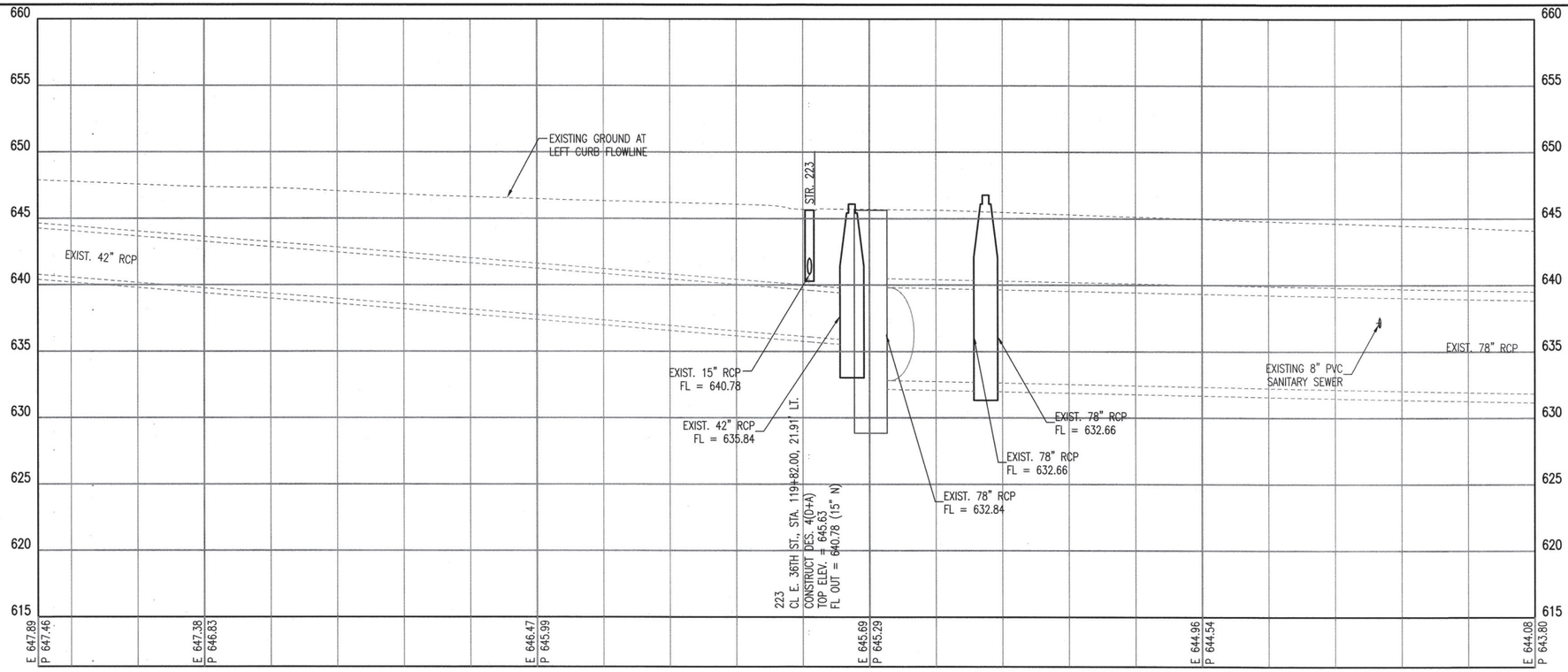

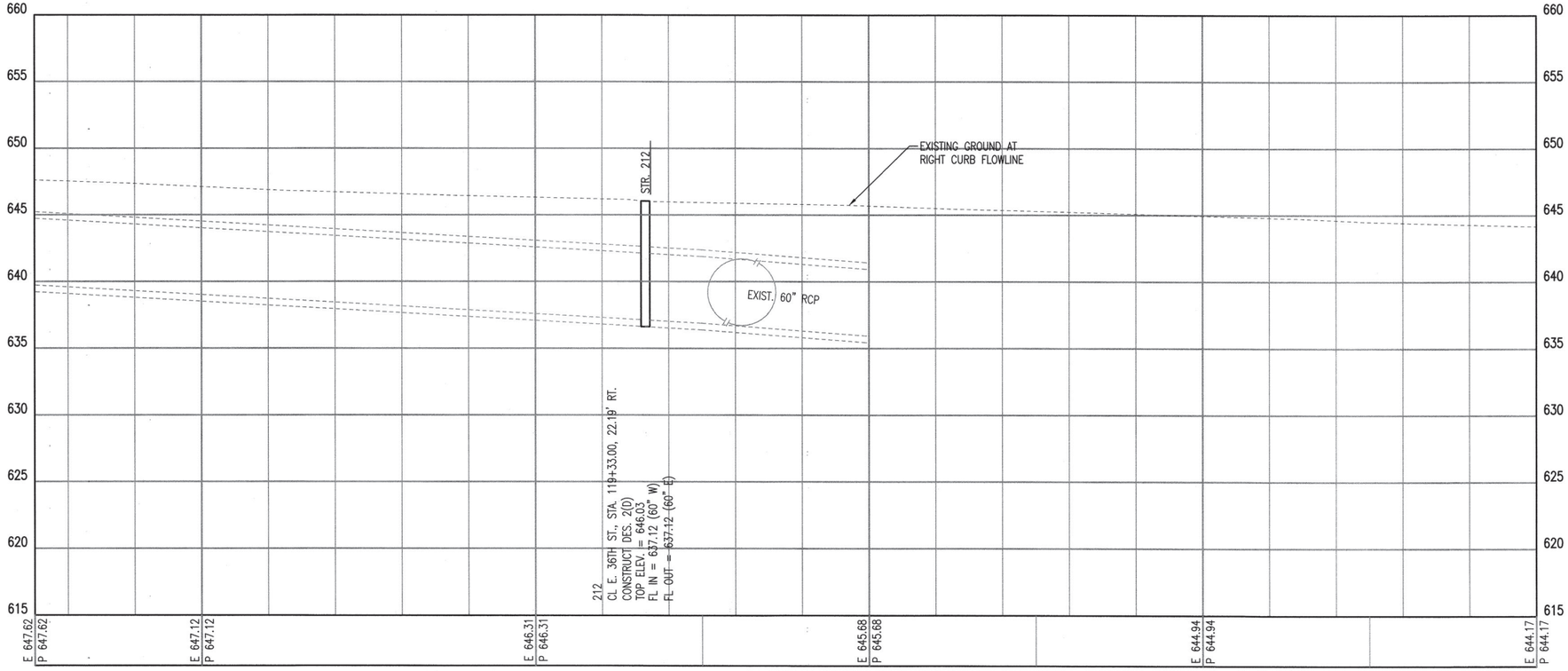

$TIME$
$DATE$
$SCALE$
SCALE:
$USER$
PLOTTED BY:
XXX
DSNM:
$FILE$

BEFORE YOU DIG 811 1-800-522-OKIE CALL OKIE

CURB PROFILE 5

PROJECT NO. 144200

ARTERIAL STREET REHABILITATION AND WATERLINE REPLACEMENT – 36TH ST. N. – MLK BLVD TO PEORIA AVE.

CITY OF TULSA, OKLAHOMA
ENGINEERING SERVICES DEPARTMENT

LICENSED PROFESSIONAL ENGINEER JASON P. DICKMAN 27639 OKLAHOMA
07/19/2020

PLANS AND ESTIMATES PREPARED BY: PEC PROFESSIONAL ENGINEERING CONSULTANTS, P.A. 1924 S. UTICA AVE., SUITE 1400 TULSA, OK 74104 918-664-5400 www.pec1.com

REVISION	BY	DATE

PLAN SCALE: 1" =
PROFILE SCALE: HORIZONTAL: 1" = 20' VERTICAL 1" = 5'

DRAWN	BFS	01/2020
DESIGNED	JPD	01/2020
SURVEY		
PROJ. MGR.		7/20
LEAD ENGR.		7/20
FIELD MGR.		
RECOMMENDED: DESIGN MANAGER		7-20

APPROVED: CITY ENGINEER

FILE: DRAWING: DATE: 10/30/20

ATLAS PAGE NO: 218, 219, 281, 282

SHEET 57 OF 165 SHEETS

MATCH LINE STA. 122+00.00

MATCH LINE STA. 126+75.00

318
Bench Mark
N=445227.785
E=2562800.546
EL=644.41
Chiseled "X" Set

125+00

C 36TH STREET N. - N 88°40'05.57" E

N. GARRISON AVE.

N. HARTFORD AVE.

Sta. 122+00.00
Off. 40.23' Rt.

Sta. 124+17.26
Off. 40.15' Rt.

Pt. 126+23.11
1395
S/4 Corner Section 13
N=445159.161
E=2563769.796
EL=640.89
Brass Cap Found

Type B Ramp

Electric Line Paint Marks

Sign "40 MPH"

Sign "DU Medical"

Sign "Stop"

30" Elm

Fire Hydrant

Power Pole

Light Pole

Transformer

Manhole

Valve

Meter

Inlet

Curb Inlet

Flow Line

Top of Curb

Gutter

Edge of Pavement

Overhead Power Line

Underground Power Line

Telephone Line

Gas Line

Water Line

Sanitary Sewer Line

Storm Sewer Line

Fiber Optic Line

Traffic Signal Line

Fence

Tree Line

Concrete

Asphalt

Gravel

Brick

Stone

Wood

Metal

Plastic

Glass

Rubber

Fabric

Paper

Cardboard

Soil

Water

Air

Vegetation

Animal

Human

Vehicle

Aircraft

Boat

Train

Bicycle

Motorcycle

Truck

Bus

Car

Van

Pickup

SUV

Minivan

Sedan

Coupe

Convertible

Hatchback

Wagon

Limousine

Taxi

Police Car

Ambulance

Fire Truck

Garbage Truck

Dump Truck

Cement Truck

Tow Truck

Street Sweeper

Snow Plow

Road Grader

Backhoe

Bulldozer

Excavator

Crane

Forklift

Loader

Roller

Paver

Milling Machine

Trencher

Boring Machine

Directional Drill

Vacuum Excavator

Hydrovac

Jetter

Camera

Locator

Tracer

Marker

Flag

Cone

Barrel

Barricade

Sign

Post

Pole

Mast

Arm

Bracket

Guy Wire

Anchor

Foundation

Footing

Pile

Caisson

Pier

Abutment

Wall

Retaining Wall

Culvert

Bridge

Tunnel

Overpass

Underpass

Interchange

Intersection

Roundabout

Median

Island

Curb

Gutter

Sidewalk

Crosswalk

Driveway

Alley

Street

Highway

Freeway

Expressway

Boulevard

Avenue

Road

Lane

Trail

Path

Bridge

Tunnel

Overpass

Underpass

Interchange

Intersection

Roundabout

Median

Island

Curb

Gutter

Sidewalk

Crosswalk

Driveway

Alley

Street

Highway

Freeway

Expressway

Boulevard

Avenue

Road

Lane

Trail

Path

BM# 318 STA. 123+55.53
CHISELED "X" SET
74.86' L

CP# 307 STA. 123+05.64
3/8" IRON PIN SET W/ CAP (HARDEN)
32.65' L

CP# 306 STA. 126+37.29
3/8" IRON PIN SET W/ CAP (HARDEN)
45.93' R

BM# 317 STA. 128+47.19
CHISELED "X" SET
77.81' L

0 10' 20' 40'

LEGEND

- PCC PANEL REPLACEMENT
- CONSTRUCT PCC CURB
- CONSTRUCT PCC DRIVEWAY
- CONSTRUCT 4" PCC SIDEWALK
- CONSTRUCT 6" PCC SIDEWALK
- CONSTRUCT INLET APRON
- FULL DEPTH PCC PAVEMENT
- SODDING – SEE LANDSCAPING PLANS

1. PCC DRIVEWAY
2. PCC 4" SIDEWALK
3. PCC CURB 6" BARRIER CURB AND GUTTER
4. PCC CURB 8" BARRIER CURB AND GUTTER (REVERSE SLOPE AT MEDIANS)
5. STAMPED CONCRETE SIDEWALK
6. ADJUST VALVE TO GRADE
7. ADJUST METER TO GRADE
8. ADJUST MANHOLE TO GRADE
9. SAW CUT
10. TACTILE WARNING DEVICE
11. REMOVE & RESET EXIST. SIGN
12. REMOVE & REPLACE EXIST. SIGN
13. PROPOSED SIGNAL POLE
14. PROPOSED RECTANGUAL RAPID–FLASH BEACON
15. PROPOSED WATERLINE
16. PCC 6" SIDEWALK
17. TYPE 1 PCC PATCH
18. CLASS A CONCRETE
19. MBW RETAINING WALL

BEFORE YOU DIG 811 1-800-522-OKIE CALL OKIE

660 655 650 645 640 635 630 625 620 615

EXISTING GROUND AT CL

EXIST. 8" PVC SANITARY SEWER

	122+00	123+00	124+00	125+00	126+00
E	644.40	643.67	642.72	641.42	640.82
P	644.40	643.67	642.72	641.42	640.82

LICENSED PROFESSIONAL ENGINEER JASON P. DICKMAN 27639 OKLAHOMA
07/19/2020

REVISION	BY	DATE

PLAN & PROFILE 6

PROJECT NO. 144200

ARTERIAL STREET REHABILITATION AND WATERLINE REPLACEMENT – 36TH ST. N. – MLK BLVD TO PEORIA AVE.

CITY OF TULSA, OKLAHOMA
ENGINEERING SERVICES DEPARTMENT

PLANS AND ESTIMATES PREPARED BY: PEC PROFESSIONAL ENGINEERING CONSULTANTS, P.A. 1504 S. UTICA AVE., SUITE 1400 TULSA, OK 74104 918-664-5400 www.pec1.com

PLAN SCALE: 1" =	DRAWN	BFS	01/2020	APPROVED:
	DESIGNED	JPD	01/2020	
	SURVEY			
PROFILE SCALE:	PROJ. MGR.			
HORIZONTAL: 1" =	LEAD ENGR.			
	FIELD MGR.			
VERTICAL 1" =	RECOMMENDED: DESIGN MANAGER			CITY ENGINEER
FILE:	DRAWING:			DATE: 10/30/20
ATLAS PAGE NO: 218, 219, 281, 282				SHEET 58 OF 165 SHEETS

$TIME$ $DATE$ $SCALE$ SCALE: $USER$ PLOTTED BY: DGN: XXX $FILE$

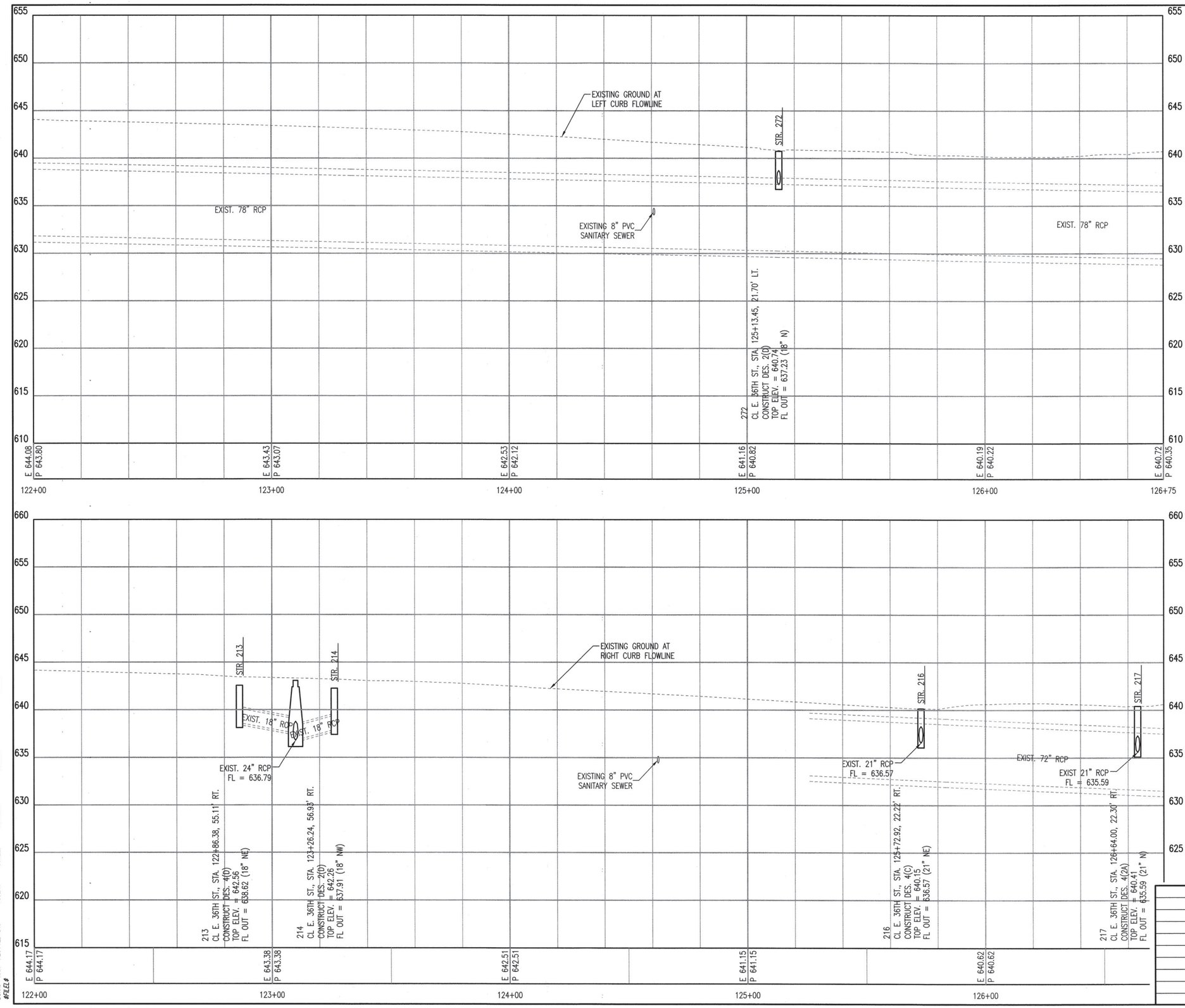

DGN: XXX PLOTTED BY: $USER$ SCALE: $SCALE$ $DATE$ $TIME$ $FILE$

REVISION	BY	DATE

JASON P. DICKMAN 27639 LICENSED PROFESSIONAL ENGINEER OKLAHOMA

07/19/2020

BEFORE YOU DIG 811 1-800-522-OKIE CALL OKIE

CURB PROFILE 6

PROJECT NO. 144200

ARTERIAL STREET REHABILITATION AND WATERLINE REPLACEMENT – 36TH ST. N. – MLK BLVD TO PEORIA AVE.

CITY OF TULSA, OKLAHOMA
ENGINEERING SERVICES DEPARTMENT

PLANS AND ESTIMATES PREPARED BY: PEC PROFESSIONAL ENGINEERING CONSULTANTS, P.A. 1924 S. UTICA AVE., SUITE 1400 TULSA, OK 74104 918-684-5400 www.pec1.com

PLAN SCALE: 1" =	DRAWN	BFS	01/2020	APPROVED:
	DESIGNED	JPD	01/2020	
	SURVEY			
PROFILE SCALE:	PROJ. MGR.		07-20	
HORIZONTAL: 1" = 20'	LEAD ENGR.		7/20	
	FIELD MGR.			
VERTICAL 1" = 5'	RECOMMENDED DESIGN MANAGER		7-20	CITY ENGINEER

FILE: DRAWING: DATE: 10-20-20

ATLAS PAGE NO: 218, 219, 281, 282 SHEET 59 OF 165 SHEETS

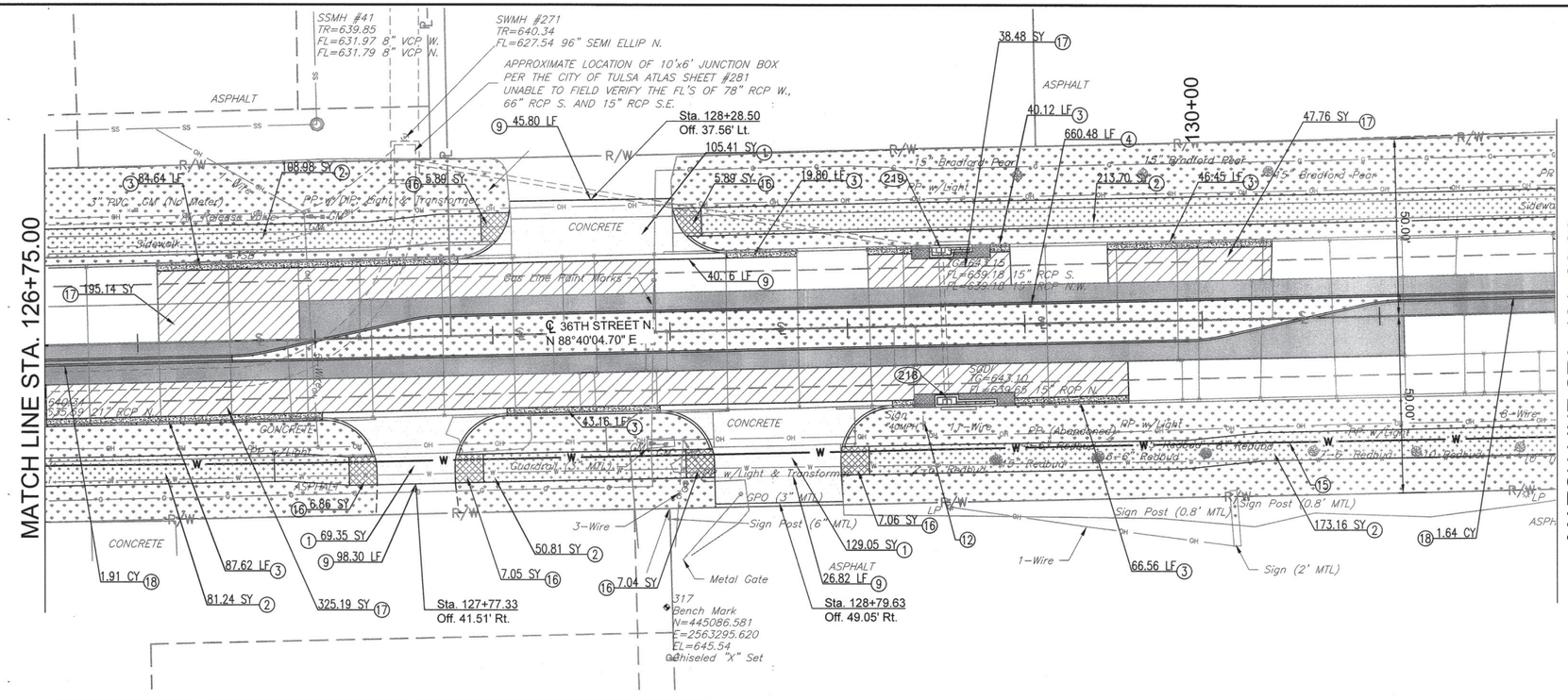

BM# 317 STA. 128+47.19 CHISELED "X" SET 77.81' R	CP# 400 STA. 127+99.59 3/8" IRON PIN SET W/ CAP (HARDEN) 40.24' L	CP# 40094 STA. 128+48.60 3/8" IRON PIN FOUND W/ CAP (WHITE) 49.97' R	CP# 354 STA. 129+03.20 3/8" IRON PIN SET W/ CAP (HARDEN) 42.13' R	CP# 401 STA. 129+78.12 MAG NAIL SET 128.12' L	BM# 317 STA. 128+47.19 CHISELED "X" SET 77.81' R

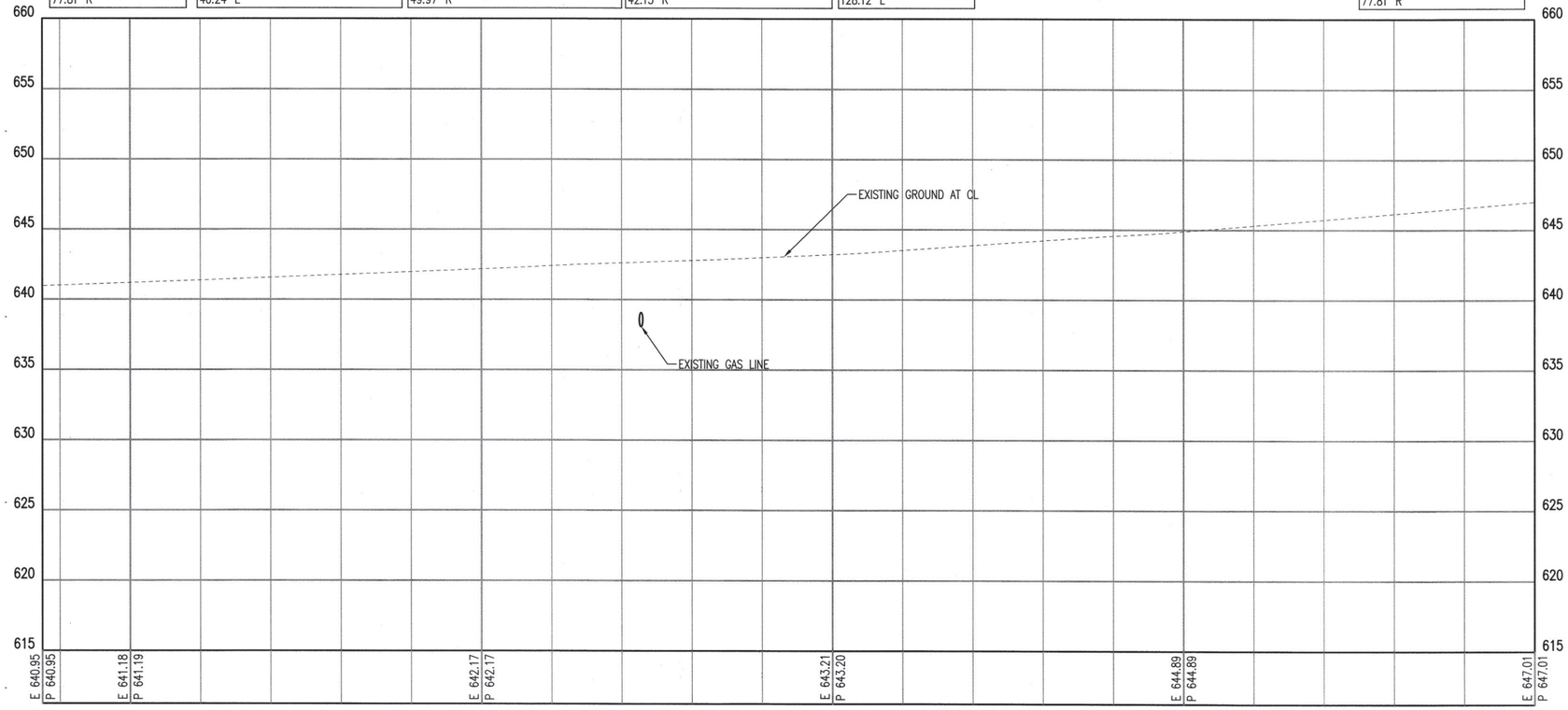

LEGEND

- PCC PANEL REPLACEMENT
- CONSTRUCT PCC CURB
- CONSTRUCT PCC DRIVEWAY
- CONSTRUCT 4" PCC SIDEWALK
- CONSTRUCT 6" PCC SIDEWALK
- CONSTRUCT INLET APRON
- FULL DEPTH PCC PAVEMENT
- SODDING – SEE LANDSCAPING PLANS

1. PCC DRIVEWAY
2. PCC 4" SIDEWALK
3. PCC CURB 6" BARRIER CURB AND GUTTER
4. PCC CURB 8" BARRIER CURB AND GUTTER (REVERSE SLOPE AT MEDIANS)
5. STAMPED CONCRETE SIDEWALK
6. ADJUST VALVE TO GRADE
7. ADJUST METER TO GRADE
8. ADJUST MANHOLE TO GRADE
9. SAW CUT
10. TACTILE WARNING DEVICE
11. REMOVE & RESET EXIST. SIGN
12. REMOVE & REPLACE EXIST. SIGN
13. PROPOSED SIGNAL POLE
14. PROPOSED RECTANGUAL RAPID–FLASH BEACON
15. PROPOSED WATERLINE
16. PCC 6" SIDEWALK
17. TYPE 1 PCC PATCH
18. CLASS A CONCRETE
19. MBW RETAINING WALL

BEFORE YOU DIG 811 1-800-522-OKIE CALL OKIE

LICENSED PROFESSIONAL ENGINEER JASON P. DICKMAN 27639 OKLAHOMA
07/19/2020

REVISION	BY	DATE

PLAN & PROFILE 7

PROJECT NO. 144200

ARTERIAL STREET REHABILITATION AND WATERLINE REPLACEMENT – 36TH ST. N. – MLK BLVD TO PEORIA AVE.

CITY OF TULSA, OKLAHOMA
ENGINEERING SERVICES DEPARTMENT

PLANS AND ESTIMATES PREPARED BY: PEC PROFESSIONAL ENGINEERING CONSULTANTS, P.A. 1924 S. UTICA AVE., SUITE 1400 TULSA, OK 74104 918-664-5400 www.pec1.com

PLAN SCALE: 1" = 20'	DRAWN	BFS	01/2020	APPROVED:
	DESIGNED	JPD	01/2020	
	SURVEY			
PROFILE SCALE:	PROJ. MGR.			
HORIZONTAL: 1" = 20'	LEAD ENGR.			
	FIELD MGR.			
VERTICAL 1" = 5'	RECOMMENDED: DESIGN MANAGER			CITY ENGINEER
FILE:	DRAWING:		DATE:	
ATLAS PAGE NO: 218, 219, 281, 282				SHEET 60 OF 165 SHEETS

$TIME$ $DATE$ $SCALE$ SCALE: $USER$ PLOTTED BY: XXX DSNR: $FILE$

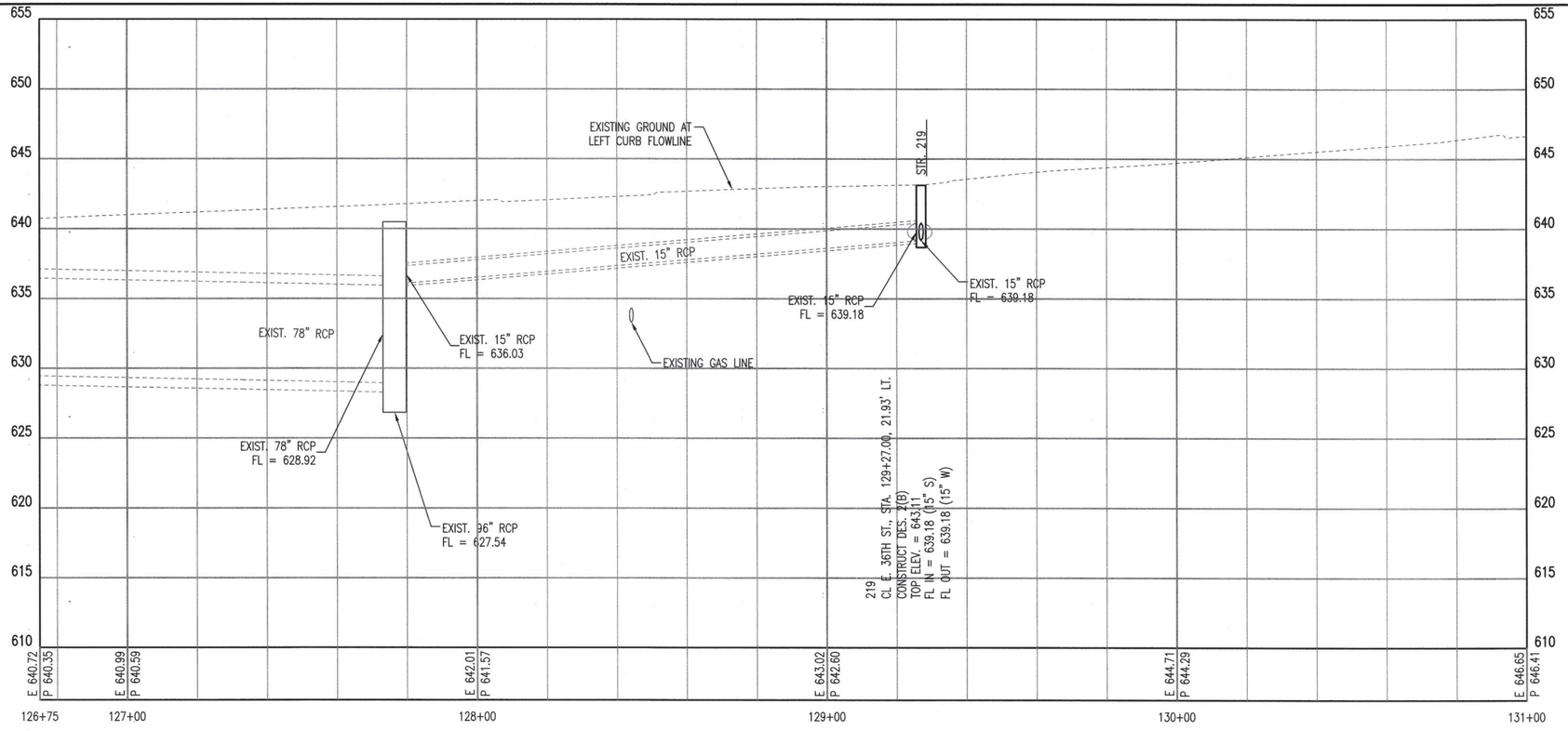

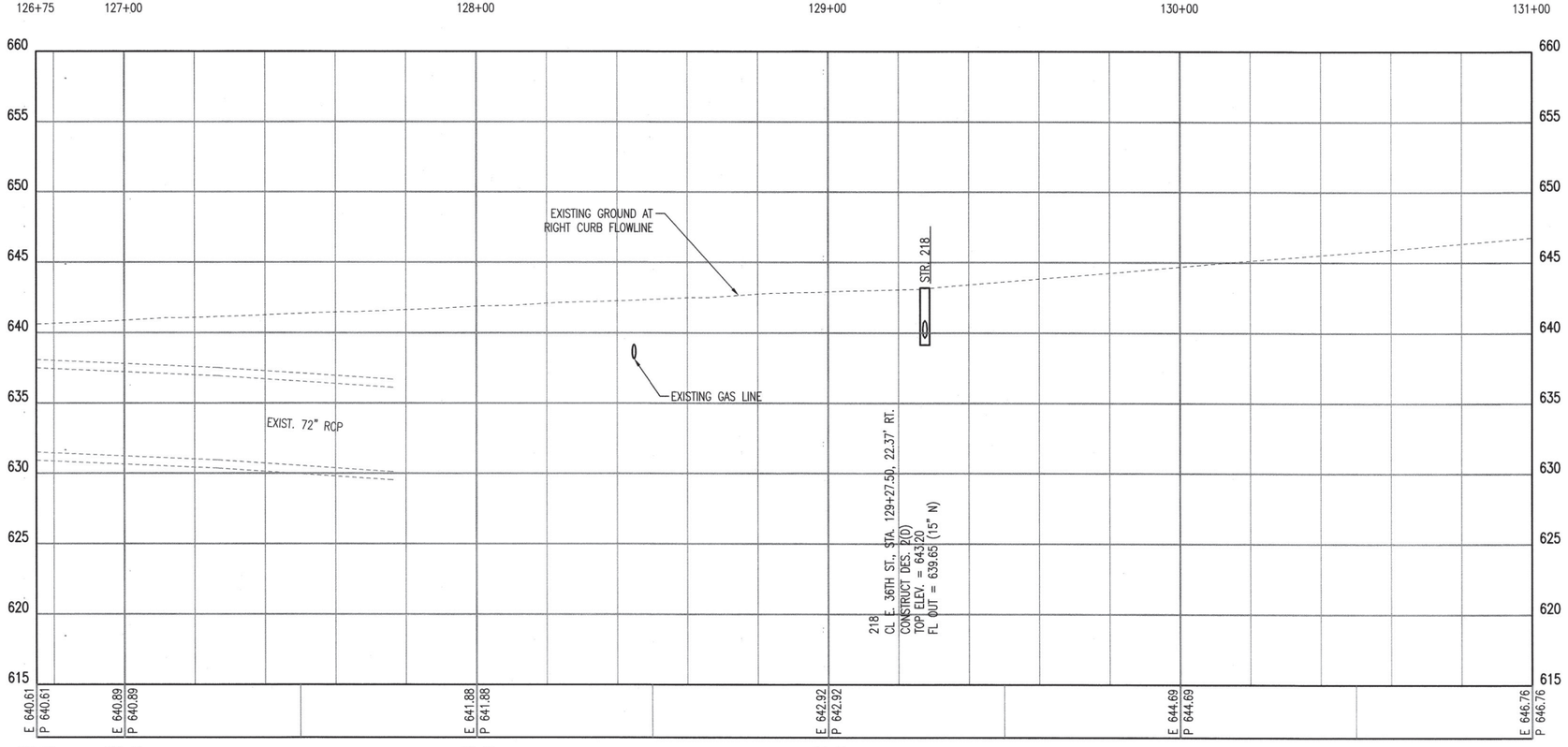

DSMR: XXX PLOTTED BY: $USER$ SCALE: $SCALE$ $DATE$ $TIME$
$FILE$

BEFORE YOU DIG 811 1-800-522-OKIE CALL OKIE

LICENSED PROFESSIONAL ENGINEER JASON P. DICKMAN 27639 OKLAHOMA
07/19/2020

REVISION	BY	DATE

CURB PROFILE 7

PROJECT NO. 144200

ARTERIAL STREET REHABILITATION AND WATERLINE REPLACEMENT – 36TH ST. N. – MLK BLVD TO PEORIA AVE.

CITY OF TULSA, OKLAHOMA
ENGINEERING SERVICES DEPARTMENT

PLANS AND ESTIMATES PREPARED BY: PEC PROFESSIONAL ENGINEERING CONSULTANTS, P.A. 1924 S. UTICA AVE., SUITE 1400 TULSA, OK 74104 918-664-5400 www.pec1.com

PLAN SCALE: 1" =	DRAWN	BFS	01/2020	APPROVED:
	DESIGNED	JPD	01/2020	
	SURVEY			
PROFILE SCALE:	PROJ. MGR.			
	LEAD ENGR.		7/20	
HORIZONTAL: 1" = 20'	FIELD MGR.			
VERTICAL 1" = 5'	RECOMMENDED: DESIGN MANAGER		9-20	CITY ENGINEER
FILE:	DRAWING:			DATE: 10/30/20
ATLAS PAGE NO: 218, 219, 281, 282				SHEET 61 OF 165 SHEETS

MATCH LINE STA. 131+00.00

MATCH LINE STA. 135+50.00

N. KENOSHA AVE.

C 36TH STREET N N 88°40'04" E

Sta. 131+38.78
Off. 37.67' Lt.

Sta. 131+33.30
Off. 46.18' Rt.

Sta. 132+24.12
Off. 43.50' Rt.

Sta. 133+78.69
Off. 42.81' Rt.

Sta. 134+49.82
Off. 42.67' Rt.

Sta. 134+86.44
Off. 35.56' Lt.

Sta. 135+45.19
Off. 45.00' Lt.

316
Bench Mark
N=445244.475
E=2563765.091
EL=652.13
Chiseled "X" Set

Relocate Guy Wire

Type B Ramp

Planter (8' DIA Plastic)

Planter Area

Sign (0.4' Wood)

Metal Guardrail

Retaining Wall (0.7' Concrete)

Type B Ramp
1.5 Bradford Pear

| | | |

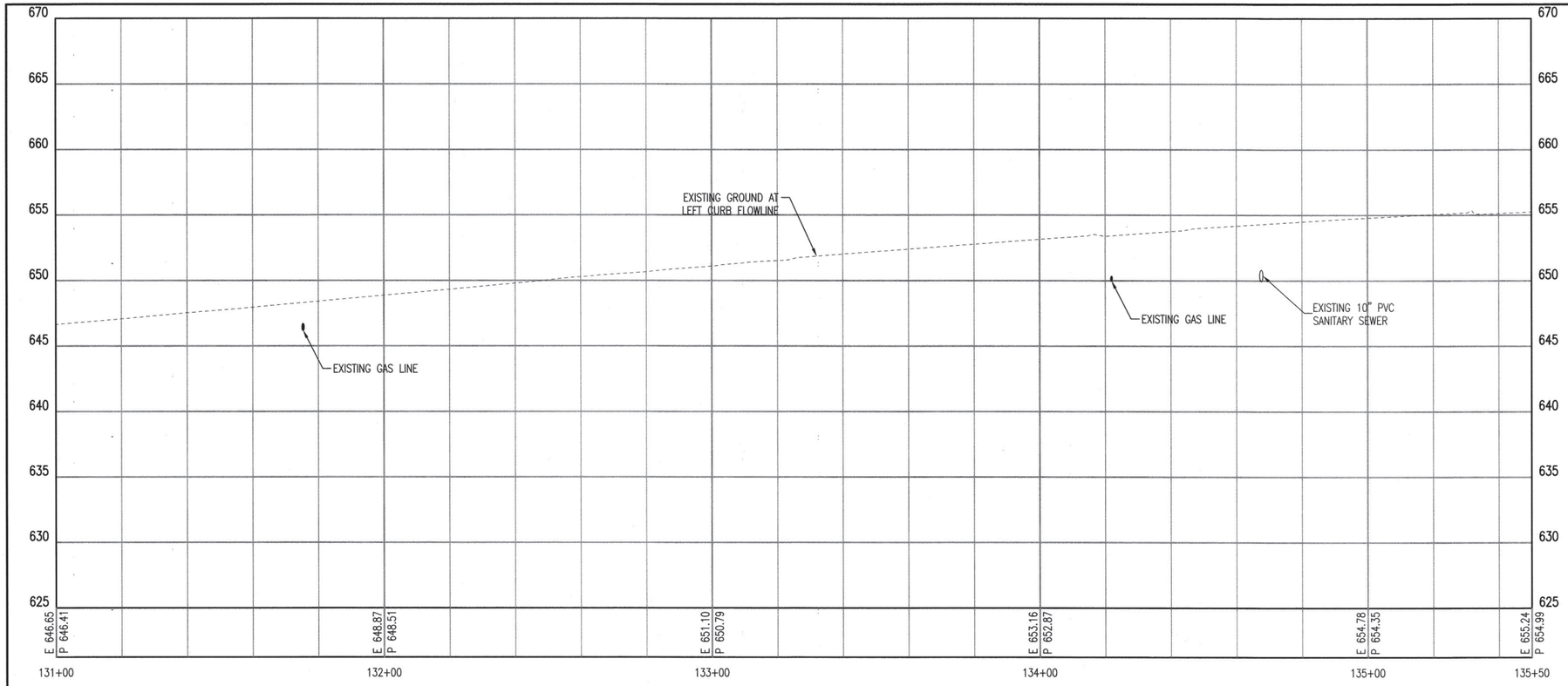

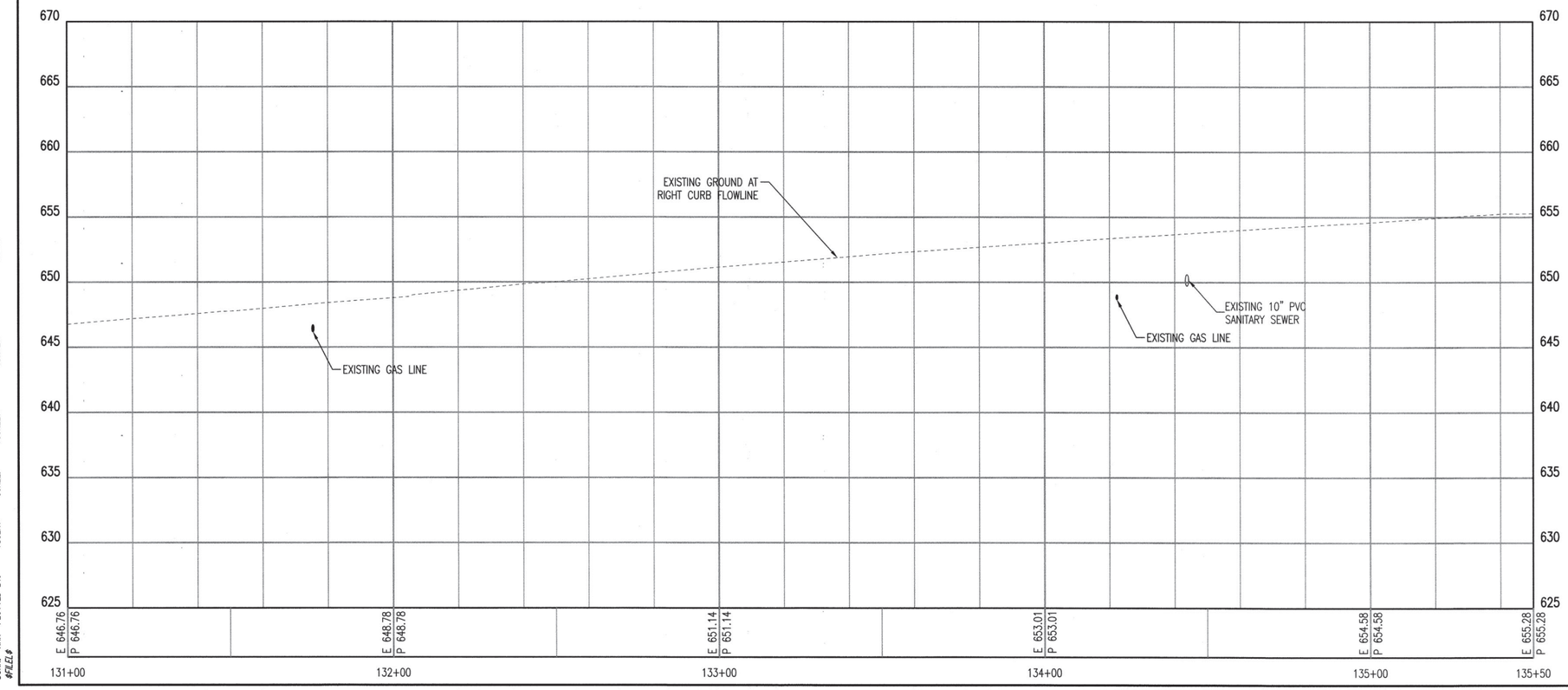

DGN: XXX PLOTTED BY: $USER$ SCALE: $SCALE$ $DATE$ $TIME$

BEFORE YOU DIG 811 1-800-522-OKIE CALL OKIE

LICENSED PROFESSIONAL ENGINEER JASON P. DICKMAN 27639 OKLAHOMA

07/19/2020

REVISION	BY	DATE

CURB PROFILE 8

PROJECT NO. 144200

ARTERIAL STREET REHABILITATION AND WATERLINE REPLACEMENT – 36TH ST. N. – MLK BLVD TO PEORIA AVE.

CITY OF TULSA, OKLAHOMA
ENGINEERING SERVICES DEPARTMENT

PLANS AND ESTIMATES PREPARED BY: PEC PROFESSIONAL ENGINEERING CONSULTANTS, P.A. 1924 S. UTICA AVE., SUITE 1400 TULSA, OK 74104 918-664-5400 www.pec1.com

PLAN SCALE: 1" =	DRAWN	BFS	01/2020	APPROVED:
	DESIGNED	JPD	01/2020	
	SURVEY			
PROFILE SCALE:	PROJ. MGR.			
HORIZONTAL: 1" = 20'	LEAD ENGR.			
	FIELD MGR.			
VERTICAL 1" = 5'	RECOMMENDED: DESIGN MANAGER			CITY ENGINEER
FILE:	DRAWING:			DATE:
ATLAS PAGE NO: 218, 219, 281, 282				SHEET 63 OF 165 SHEETS

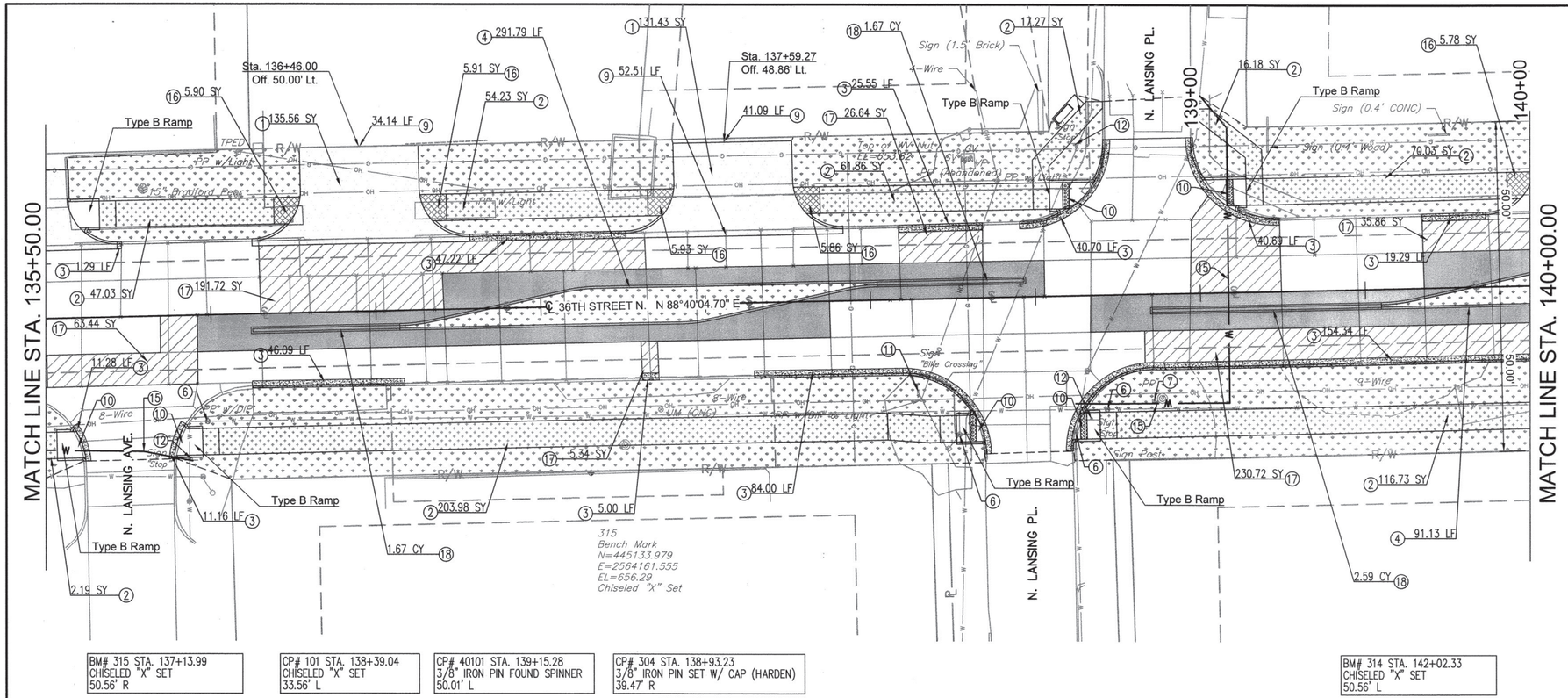

0 10' 20' 40'

LEGEND

- PCC PANEL REPLACEMENT
- CONSTRUCT PCC CURB
- CONSTRUCT PCC DRIVEWAY
- CONSTRUCT 4" PCC SIDEWALK
- CONSTRUCT 6" PCC SIDEWALK
- CONSTRUCT INLET APRON
- FULL DEPTH PCC PAVEMENT
- SODDING – SEE LANDSCAPING PLANS

1. PCC DRIVEWAY
2. PCC 4" SIDEWALK
3. PCC CURB 6" BARRIER CURB AND GUTTER
4. PCC CURB 8" BARRIER CURB AND GUTTER (REVERSE SLOPE AT MEDIANS)
5. STAMPED CONCRETE SIDEWALK
6. ADJUST VALVE TO GRADE
7. ADJUST METER TO GRADE
8. ADJUST MANHOLE TO GRADE
9. SAW CUT
10. TACTILE WARNING DEVICE
11. REMOVE & RESET EXIST. SIGN
12. REMOVE & REPLACE EXIST. SIGN
13. PROPOSED SIGNAL POLE
14. PROPOSED RECTANGUAL RAPID-FLASH BEACON
15. PROPOSED WATERLINE
16. PCC 6" SIDEWALK
17. TYPE 1 PCC PATCH
18. CLASS A CONCRETE
19. MBW RETAINING WALL

BEFORE YOU DIG CALL OKIE 811 1-800-522-OKIE

LICENSED PROFESSIONAL ENGINEER JASON P. DICKMAN 27639 OKLAHOMA
07/19/2020

REVISION	BY	DATE

PLAN & PROFILE 9

PROJECT NO. 144200

ARTERIAL STREET REHABILITATION AND WATERLINE REPLACEMENT – 36TH ST. N. – MLK BLVD TO PEORIA AVE.

CITY OF TULSA, OKLAHOMA
ENGINEERING SERVICES DEPARTMENT

PLANS AND ESTIMATES PREPARED BY: PEC PROFESSIONAL ENGINEERING CONSULTANTS, P.A. 1924 S. UTICA AVE., SUITE 1400 TULSA, OK 74104 918-664-5400 www.pec1.com

PLAN SCALE: 1" = 20'	DRAWN	BFS	01/2020
	DESIGNED	JPD	01/2020
	SURVEY		
PROFILE SCALE:	PROJ. MGR.	JPD	07/20
HORIZONTAL: 1" = 20'	LEAD ENGR.	DJ	7/20
	FIELD MGR.	KMW	8/20
VERTICAL 1" = 5'	RECOMMENDED DESIGN MANAGER	MB	9/20

APPROVED: CITY ENGINEER

FILE: DRAWING: DATE: 10/30/20

ATLAS PAGE NO: 218, 219, 281, 282 SHEET 64 OF 165 SHEETS

DSNG: XXX PLOTTED BY: $USER$ SCALE: $SCALE$ $DATE$ $TIME$ $FILE$

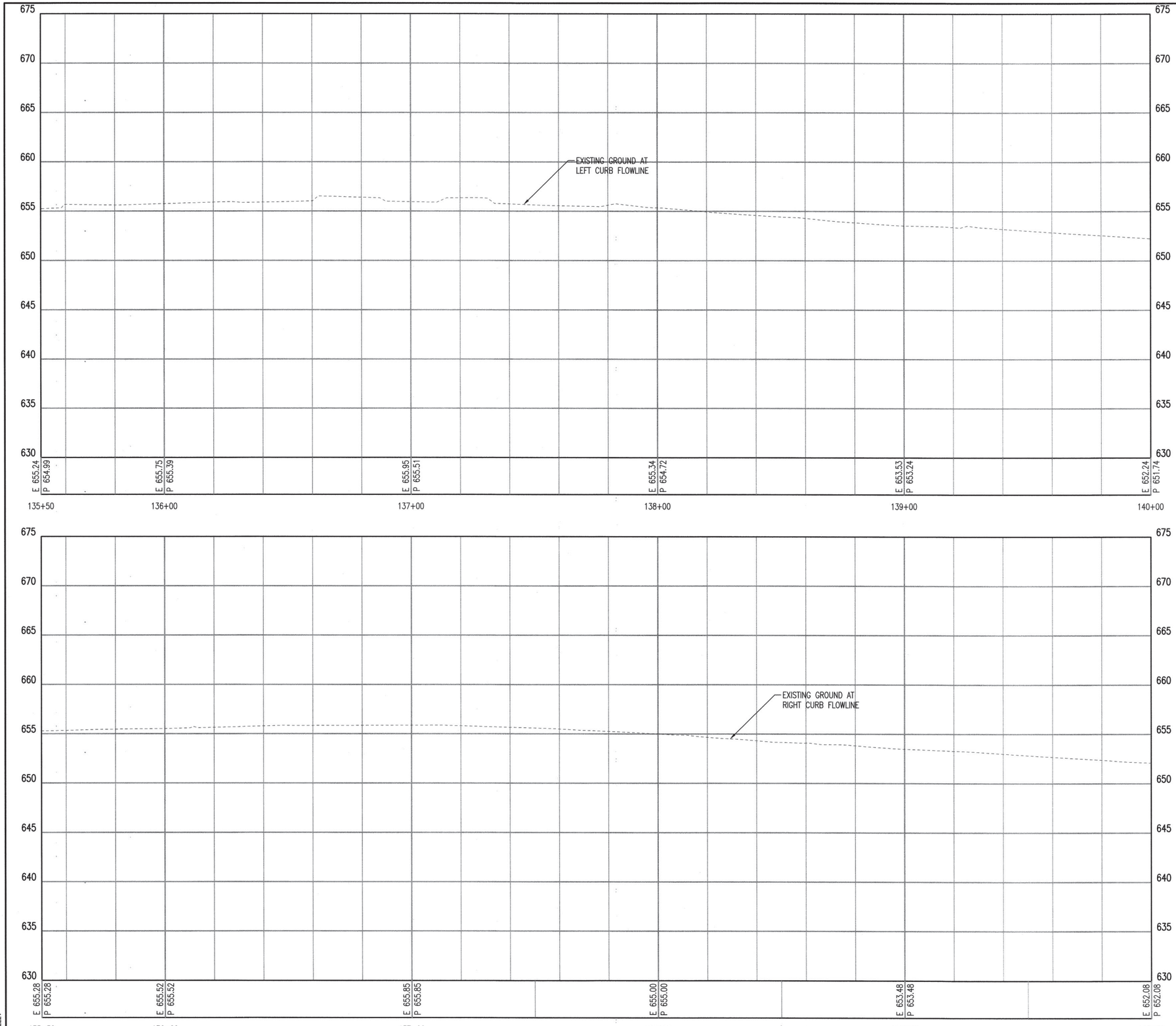

DGNR: XXX PLOTTED BY: $USER$ SCALE: $SCALE$ $DATE$ $TIME$
$FILE$





07/19/2020

REVISION	BY	DATE

CURB PROFILE 9

PROJECT NO. 144200

ARTERIAL STREET REHABILITATION AND WATERLINE REPLACEMENT – 36TH ST. N. – MLK BLVD TO PEORIA AVE.

CITY OF TULSA, OKLAHOMA
ENGINEERING SERVICES DEPARTMENT

PLANS AND ESTIMATES PREPARED BY: PEC — PROFESSIONAL ENGINEERING CONSULTANTS, P.A. 1924 S. UTICA AVE., SUITE 1400 TULSA, OK 74104 918-664-5400 www.pect.com

PLAN SCALE: 1" =	DRAWN	BFS	01/2020	APPROVED:
	DESIGNED	JPD	01/2020	
	SURVEY			
PROFILE SCALE:	PROJ. MGR.		07/20	
HORIZONTAL: 1" = 20'	LEAD ENGR.		7/20	
	FIELD MGR.			
VERTICAL 1" = 5'	RECOMMENDED DESIGN MANAGER		9.20	CITY ENGINEER
FILE:	DRAWING:			DATE: 10/30/20
ATLAS PAGE NO: 218, 219, 281, 282				SHEET 65 OF 165 SHEETS

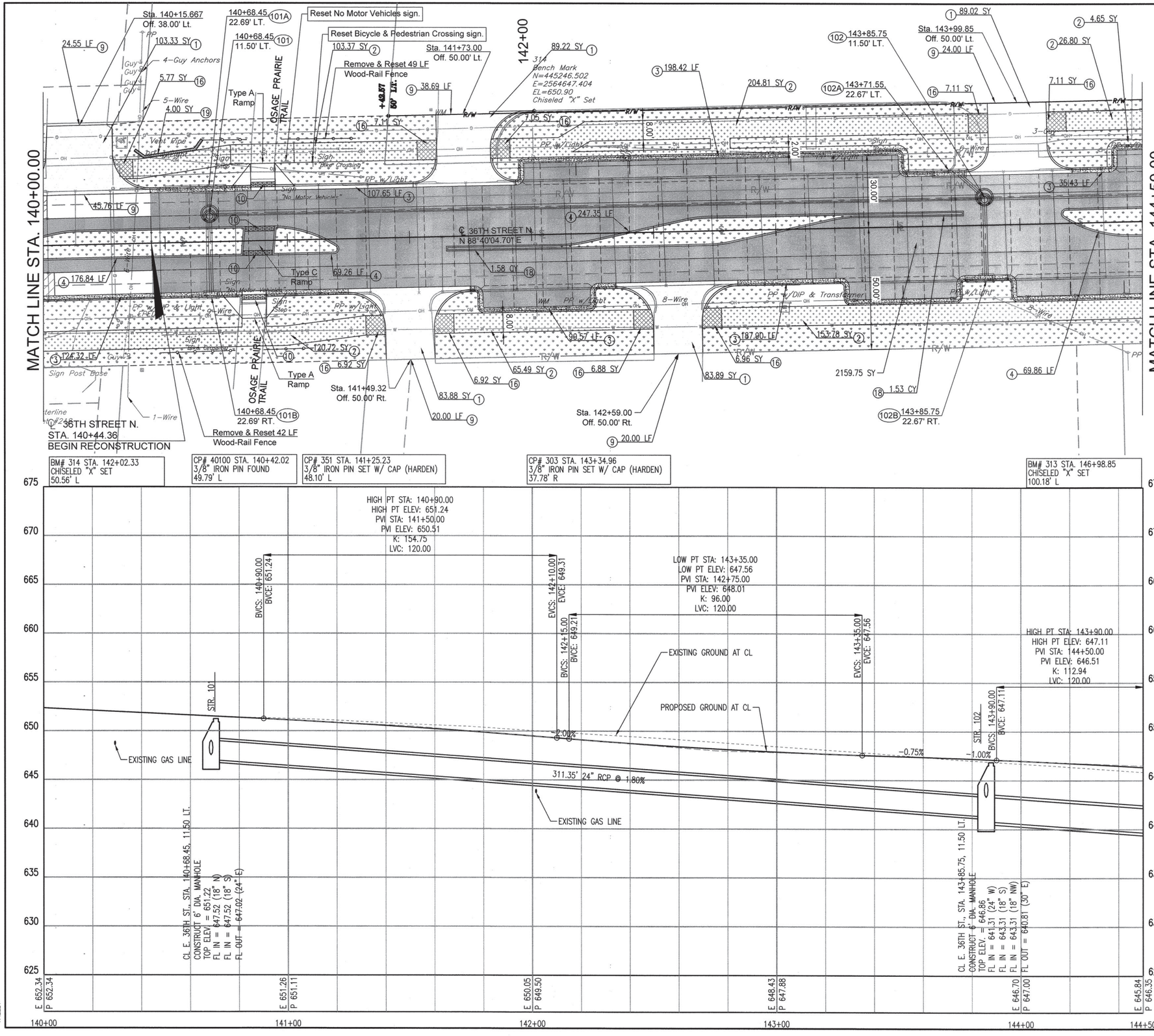

PLAN & PROFILE 10

PROJECT NO. 144200

ARTERIAL STREET REHABILITATION AND WATERLINE REPLACEMENT – 36TH ST. N. – MLK BLVD TO PEORIA AVE.

CITY OF TULSA, OKLAHOMA
ENGINEERING SERVICES DEPARTMENT

PLANS AND ESTIMATES PREPARED BY: PEC PROFESSIONAL ENGINEERING CONSULTANTS, P.A. 1924 S. UTICA AVE., SUITE 1400 TULSA, OK 74104 918-664-5400 www.pec1.com

REVISION	BY	DATE

PLAN SCALE: 1" = 20'
HORIZONTAL: 1" = 20'
VERTICAL 1" = 5'
PROFILE SCALE:

DRAWN	BFS	01/2020
DESIGNED	JPD	01/2020
SURVEY		
PROJ. MGR.		
LEAD ENGR.		
FIELD MGR.		
RECOMMENDED: DESIGN MANAGER		

APPROVED: CITY ENGINEER

FILE: DRAWING: DATE: 10/30/20

ATLAS PAGE NO: 218, 219, 281, 282 SHEET 66 OF 165 SHEETS

DGN: XXX PLOTTED BY: $USER$ SCALE: $SCALE$ $DATE$ $TIME$ $FILE$

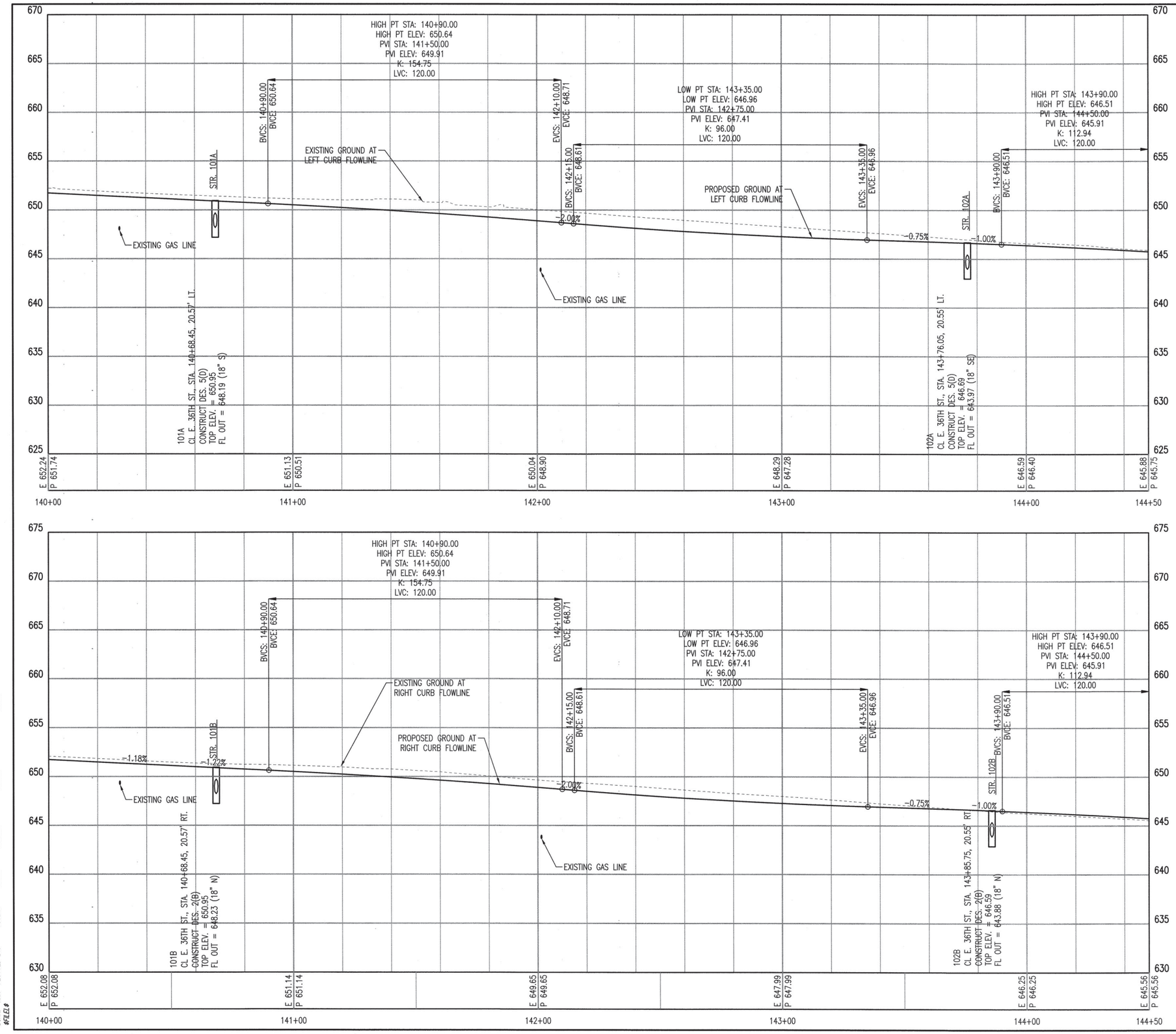

DGN: XXX PLOTTED BY: $USER$ SCALE: $SCALE$ $DATE$ $TIME$ $FILE$

BEFORE YOU DIG 811 1-800-522-OKIE CALL OKIE

LICENSED PROFESSIONAL ENGINEER
JASON P. DICKMAN 27639
OKLAHOMA
07/19/2020

REVISION	BY	DATE

CURB PROFILE 10

PROJECT NO. 144200

ARTERIAL STREET REHABILITATION AND WATERLINE REPLACEMENT – 36TH ST. N. – MLK BLVD TO PEORIA AVE.

CITY OF TULSA, OKLAHOMA
ENGINEERING SERVICES DEPARTMENT

PLANS AND ESTIMATES PREPARED BY: PEC PROFESSIONAL ENGINEERING CONSULTANTS, P.A. 1924 S. UTICA AVE., SUITE 1400 TULSA, OK 74104 918-664-5400 www.pec1.com

PLAN SCALE: 1" =

PROFILE SCALE:

HORIZONTAL: 1" = 20'

VERTICAL 1" = 5'

DRAWN	BFS	01/2020
DESIGNED	JPD	01/2020
SURVEY		
PROJ. MGR.		7/20
LEAD ENGR.		7/20
FIELD MGR.		8/20
RECOMMENDED DESIGN MANAGER		9-20

APPROVED:

CITY ENGINEER

FILE: DRAWING: DATE: 10/30/20

ATLAS PAGE NO: 218, 219, 281, 282 SHEET 67 OF 165 SHEETS

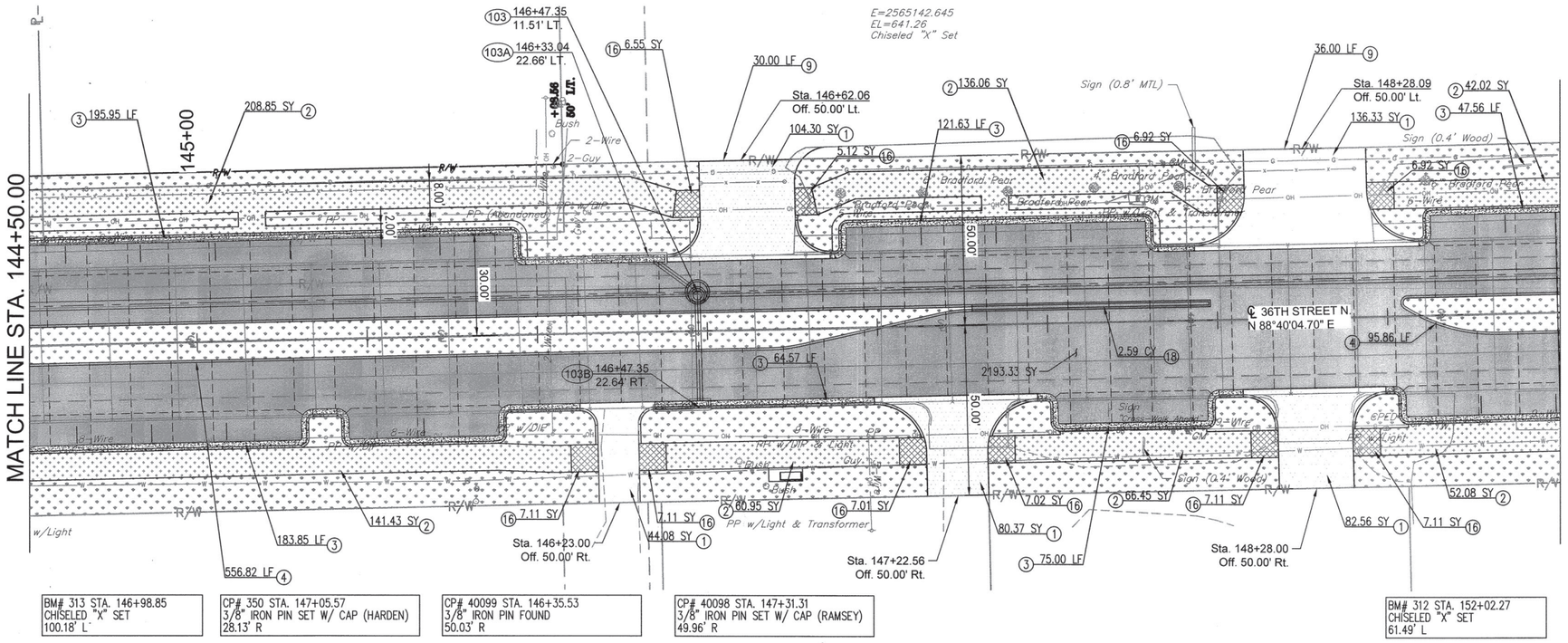

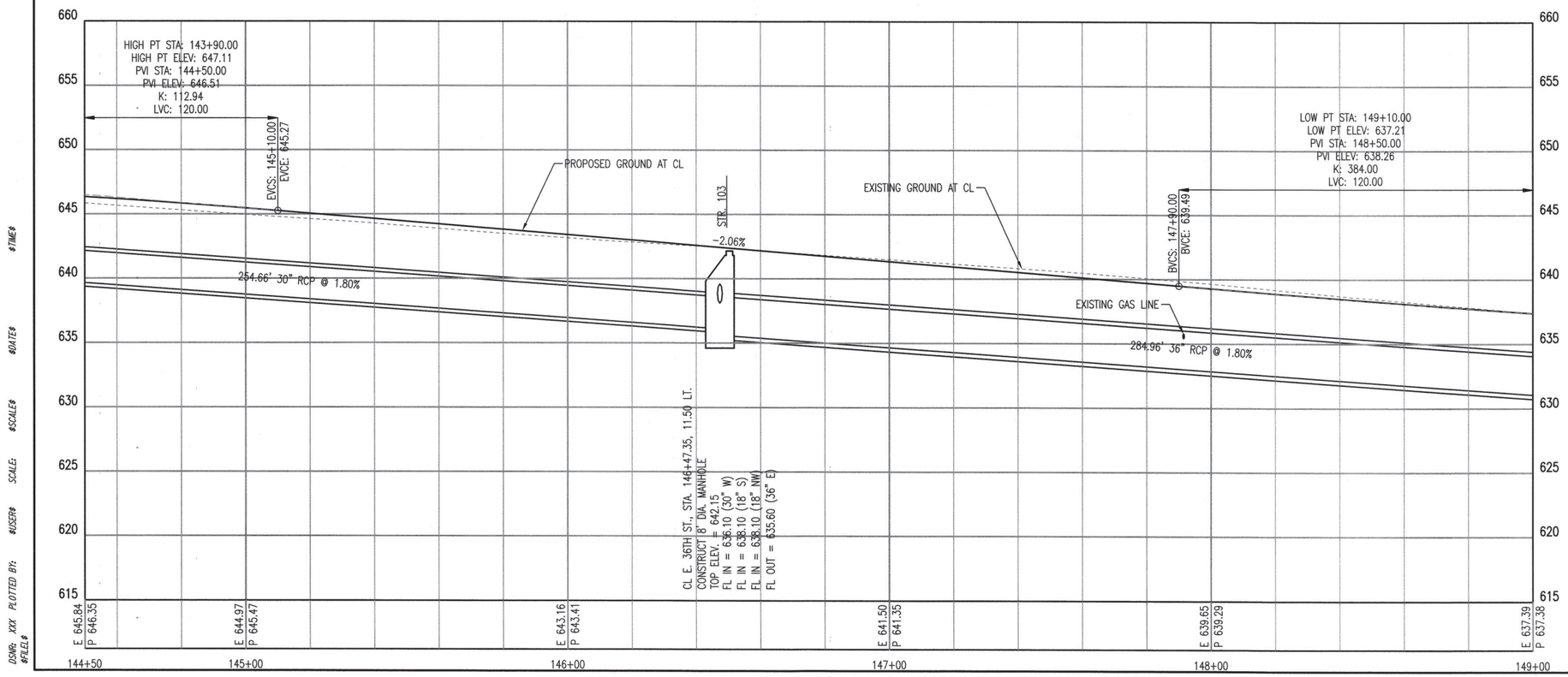

SEE JOINT LAYOUT SHEET FOR JOINT SPACING

LEGEND

- PCC PANEL REPLACEMENT
- CONSTRUCT PCC CURB
- CONSTRUCT PCC DRIVEWAY
- CONSTRUCT 4" PCC SIDEWALK
- CONSTRUCT 6" PCC SIDEWALK
- CONSTRUCT INLET APRON
- FULL DEPTH PCC PAVEMENT
- SODDING – SEE LANDSCAPING PLANS

1. PCC DRIVEWAY
2. PCC 4" SIDEWALK
3. PCC CURB 6" BARRIER CURB AND GUTTER
4. PCC CURB 8" BARRIER CURB AND GUTTER (REVERSE SLOPE AT MEDIANS)
5. STAMPED CONCRETE SIDEWALK
6. ADJUST VALVE TO GRADE
7. ADJUST METER TO GRADE
8. ADJUST MANHOLE TO GRADE
9. SAW CUT
10. TACTILE WARNING DEVICE
11. REMOVE & RESET EXIST. SIGN
12. REMOVE & REPLACE EXIST. SIGN
13. PROPOSED SIGNAL POLE
14. PROPOSED RECTANGUAL RAPID-FLASH BEACON
15. PROPOSED WATERLINE
16. PCC 6" SIDEWALK
17. TYPE 1 PCC PATCH
18. CLASS A CONCRETE
19. MBW RETAINING WALL

BEFORE YOU DIG 811 1-800-522-OKIE CALL OKIE

LICENSED PROFESSIONAL ENGINEER JASON P. DICKMAN 27639 OKLAHOMA
07/19/2020

PLAN & PROFILE 11

PROJECT NO. 144200

ARTERIAL STREET REHABILITATION AND WATERLINE REPLACEMENT – 36TH ST. N. – MLK BLVD TO PEORIA AVE.

CITY OF TULSA, OKLAHOMA
ENGINEERING SERVICES DEPARTMENT

PLANS AND ESTIMATES PREPARED BY: PEC PROFESSIONAL ENGINEERING CONSULTANTS, P.A. 1504 S. UTICA AVE., SUITE 1400 TULSA, OK 74104 918-664-5400 www.pec1.com

REVISION	BY	DATE

PLAN SCALE: 1" = 20'
PROFILE SCALE:
HORIZONTAL: 1" = 20'
VERTICAL 1" = 5'

DRAWN	BFS	01/2020
DESIGNED	JPD	01/2020
SURVEY		
PROJ. MGR.		
LEAD ENGR.		
FIELD MGR.		
RECOMMENDED: DESIGN MANAGER		

APPROVED:

CITY ENGINEER

FILE: DRAWING:

DATE: 10/30/20

ATLAS PAGE NO: 218, 219, 281, 282

SHEET 68 OF 165 SHEETS

DSNR: XXX PLOTTED BY: $USER$ SCALE: $SCALE$ $DATE$ $TIME$ $FILE$

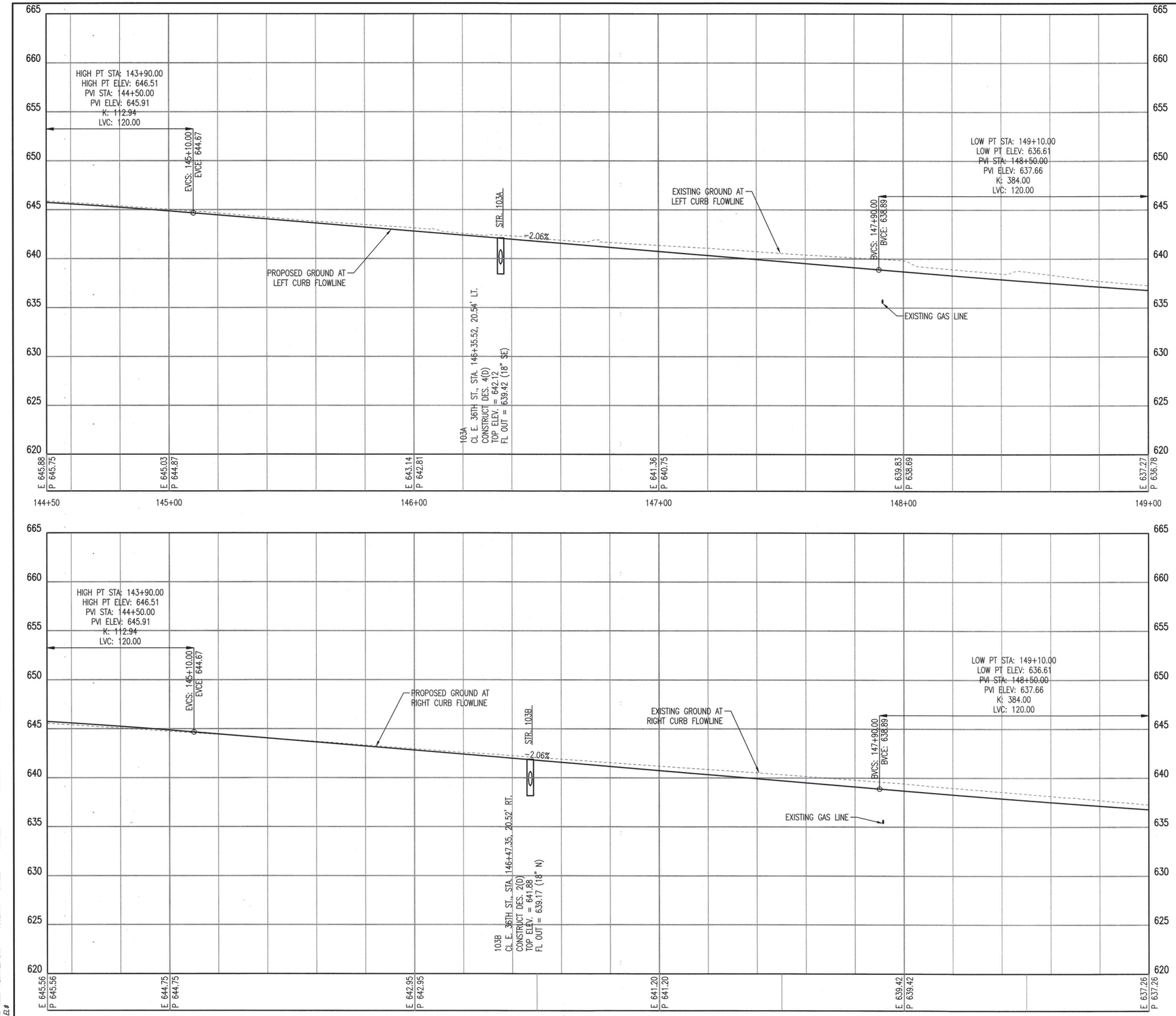

DSWN: XXX PLOTTED BY: $USER$ SCALE: $SCALE$ $DATE$ $TIME$
$FILE$

BEFORE YOU DIG 811 1-800-522-OKIE CALL OKIE

07/19/2020

REVISION	BY	DATE

CURB PROFILE 11

PROJECT NO. 144200

ARTERIAL STREET REHABILITATION AND WATERLINE REPLACEMENT – 36TH ST. N. – MLK BLVD TO PEORIA AVE.

CITY OF TULSA, OKLAHOMA
ENGINEERING SERVICES DEPARTMENT

PLANS AND ESTIMATES PREPARED BY: PEC PROFESSIONAL ENGINEERING CONSULTANTS, P.A. 1924 S. UTICA AVE., SUITE 1400 TULSA, OK 74104 918-664-5400 www.pec1.com

PLAN SCALE: 1" =	DRAWN	BFS	01/2020
	DESIGNED	JPD	01/2020
	SURVEY		
PROFILE SCALE:	PROJ. MGR.		
HORIZONTAL: 1" = 20'	LEAD ENGR.		
	FIELD MGR.		
VERTICAL 1" = 5'	RECOMMENDED: DESIGN MANAGER		

APPROVED: CITY ENGINEER

FILE: DRAWING: DATE: 10/30/20

ATLAS PAGE NO: 218, 219, 281, 282 SHEET 69 OF 165 SHEETS

MATCH LINE STA. 149+00.00

68.38 SY (1)
15.00 LF (9)
Sta. 149+50.56
Off. 50.00' Lt.
7.11 SY (16)
36.43 SY (2)
38.84 LF (3)
7.11 SY (16)
150+00
172.31 SY (2)
1-Wire
6.68 SY (16)
Sta. 151+68.89
Off. 50.00' Lt.
26.29 LF (9)
90.16 SY (1)
312
Bench Mark
N=445280.595
E=2565646.823
EL=632.88
Chiseled "X" Set
27.59 SY (2)
6.67 SY (16)
R/W
Gas Service
6-Wire
PP w/DIP. & Light
Sign "Bus Stop"
Sign "30 MPH"
149+26.60
22.67' LT.
104A
149+40.25
11.50' LT.
104
169.91 LF (3)
105A 152+10.12
22.66' LT.
105 152+14.44
11.50' LT.
TYPE B RAMP
℄ 36TH STREET N. N 88°40'04.70" E
120.00 LF (3)
120.06 LF (4)
36.60 LF (3)
106 152+09.85
22.67' RT.
130.93 LF (4)
65.28 LF (5)
PP w/DIP & Transformer
8-Wire
Guy
3-Guy
PP w/Light & Light
1-Wire
Sign "Right Turn"
Sign "Right Land Ends"
Gas Service
69.07 SY (2)
6.60 SY (16)
Sta. 149+96.00
Off. 50.00' Rt.
33.84 SY (1)
26.00 LF (9)
7.19 SY (16)
7.11 SY (16)
38.50 SY (2)
149+40.25
22.67' RT.
104B
Sta. 150+88.75
Off. 50.00' Rt.
150.42 SY (1)
40.00 LF (9)
7.11 SY (16)
105.44 SY (2)
3-Sign Post Base
Sign Post 42.0"x12.0" (Typ.)
107 152+11.46
45.78' RT.
108 152+31.17
52.11' RT.
Sign (7.5' Wide)
Sign (Metal)
"Aero 36" ST. N."
Sign (Metal)
"Aero"
Sign
"Aero 36" St."
℄ PEORIA AVE
1399
SEC COR
N=445220.701
E=2565716.398
EL=632.09
3400.74 SY
153+39.64
91.57' LT.
ES
INSTALL 7.0 TONS
TYPE I PLAIN RIPRAP
68.27 LF (3)
41.50 SY (2)
Gas Line Paint Marks
Vent Pipe
Sign
Gas
TS Vault
68.40 LF (3)
23.79 SY (2)
℄ 36TH STREET N. STA. 152+70.43
END RECONSTRUCTION
N - 445,223.3026
E - 2,565,797.2166

BM# 312 STA. 152+02.27
CHISELED "X" SET
61.49' L

CP# 302 STA. 151+30.66
3/8" IRON PIN SET W/ CAP (HARDEN)
30.42' L

CP# 102 STA. 152+12.80
CHISELED "X" SET
34.77' R

CP# 40080 STA. 152+12.77
CHISELED "X" FOUND
34.79' R

BM# 1399 STA. 152+70.43
BRASS CAP FOUND
0.00' R

0 10' 20' 40'

LEGEND

- PCC PANEL REPLACEMENT
- CONSTRUCT PCC CURB
- CONSTRUCT PCC DRIVEWAY
- CONSTRUCT 4" PCC SIDEWALK
- CONSTRUCT 6" PCC SIDEWALK
- CONSTRUCT INLET APRON
- FULL DEPTH PCC PAVEMENT
- SODDING – SEE LANDSCAPING PLANS

1. PCC DRIVEWAY
2. PCC 4" SIDEWALK
3. PCC CURB 6" BARRIER CURB AND GUTTER
4. PCC CURB 8" BARRIER CURB AND GUTTER (REVERSE SLOPE AT MEDIANS)
5. STAMPED CONCRETE SIDEWALK
6. ADJUST VALVE TO GRADE
7. ADJUST METER TO GRADE
8. ADJUST MANHOLE TO GRADE
9. SAW CUT
10. TACTILE WARNING DEVICE
11. REMOVE & RESET EXIST. SIGN
12. REMOVE & REPLACE EXIST. SIGN
13. PROPOSED SIGNAL POLE
14. PROPOSED RECTANGUAL RAPID-FLASH BEACON
15. PROPOSED WATERLINE
16. PCC 6" SIDEWALK
17. TYPE 1 PCC PATCH
18. CLASS A CONCRETE
19. MBW RETAINING WALL

SEE JOINT LAYOUT SHEET FOR JOINT SPACING

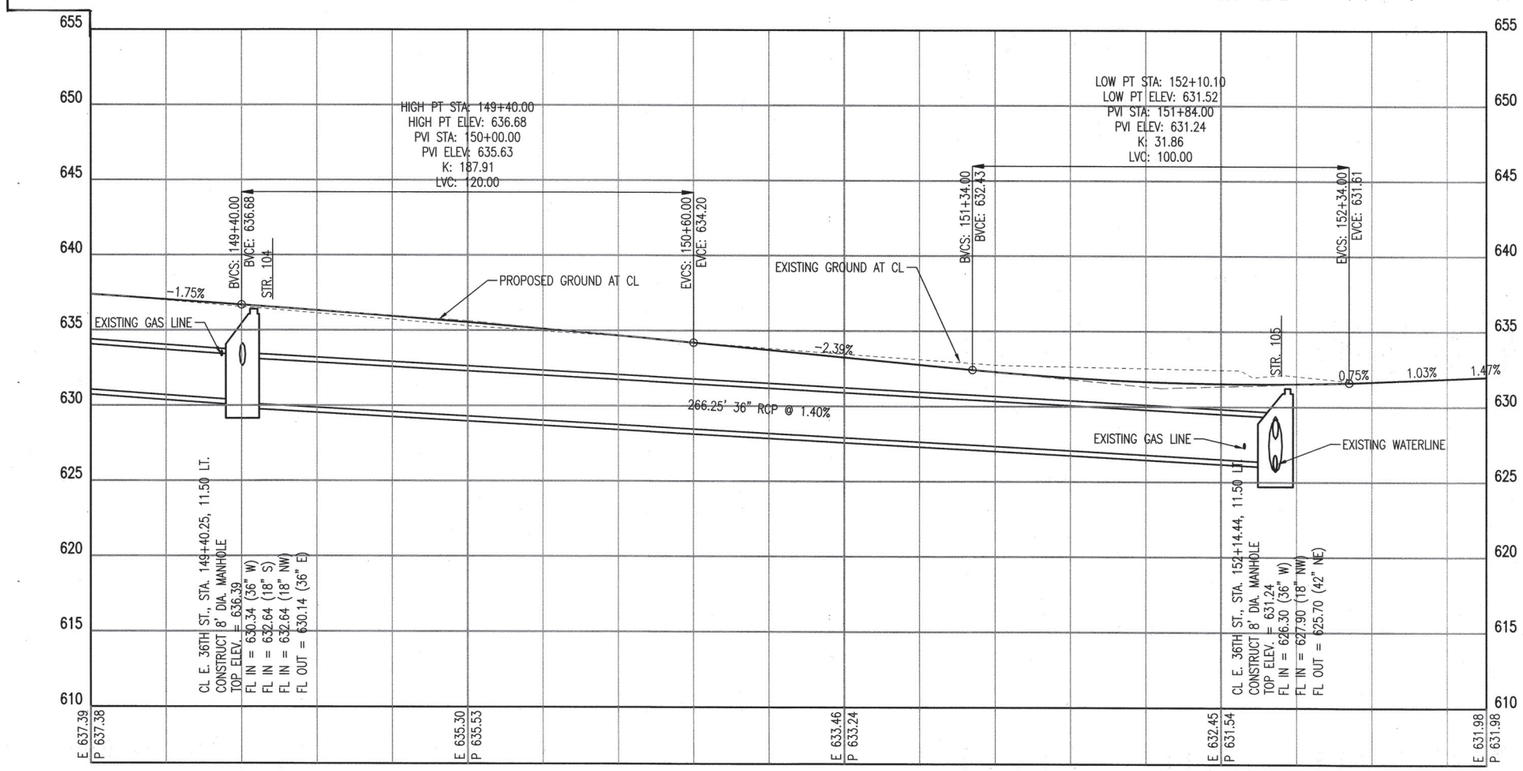

BEFORE YOU DIG 811 OKIE 1-800-522-OKIE CALL OKIE

LICENSED PROFESSIONAL ENGINEER JASON P. DICKMAN 27639 OKLAHOMA
07/19/2020

PLAN & PROFILE 12

PROJECT NO. 144200

ARTERIAL STREET REHABILITATION AND WATERLINE REPLACEMENT – 36TH ST. N. – MLK BLVD TO PEORIA AVE.

CITY OF TULSA, OKLAHOMA
ENGINEERING SERVICES DEPARTMENT

PLANS AND ESTIMATES PREPARED BY: PEC PROFESSIONAL ENGINEERING CONSULTANTS, P.A. 1924 S. UTICA AVE., SUITE 1400 TULSA, OK 74104 918-864-5400 www.pec1.com

REVISION	BY	DATE

PLAN SCALE: 1" = 20'
PROFILE SCALE: HORIZONTAL: 1" = 20' VERTICAL 1" = 5'

DRAWN	BFS	01/2020
DESIGNED	JPD	01/2020
SURVEY		
PROJ. MGR.		
LEAD ENGR.		
FIELD MGR.		
RECOMMENDED: DESIGN MANAGER		

APPROVED: CITY ENGINEER

FILE: DRAWING: DATE: 10/30/20

ATLAS PAGE NO: 218, 219, 281, 282 SHEET 70 OF 165 SHEETS

DGN: XXX PLOTTED BY: $USER$ SCALE: $SCALE$ $DATE$ $TIME$ $FILE$

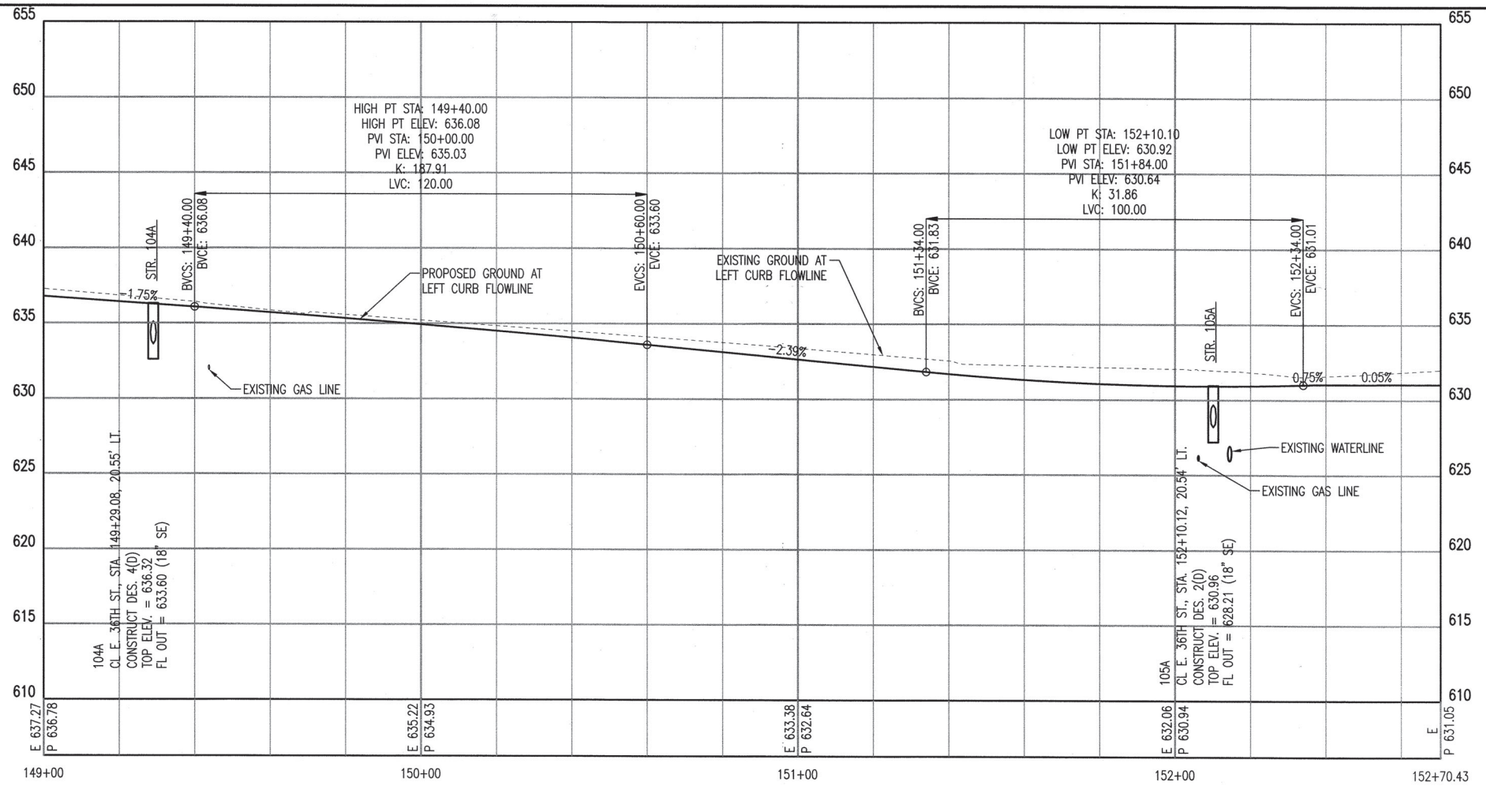

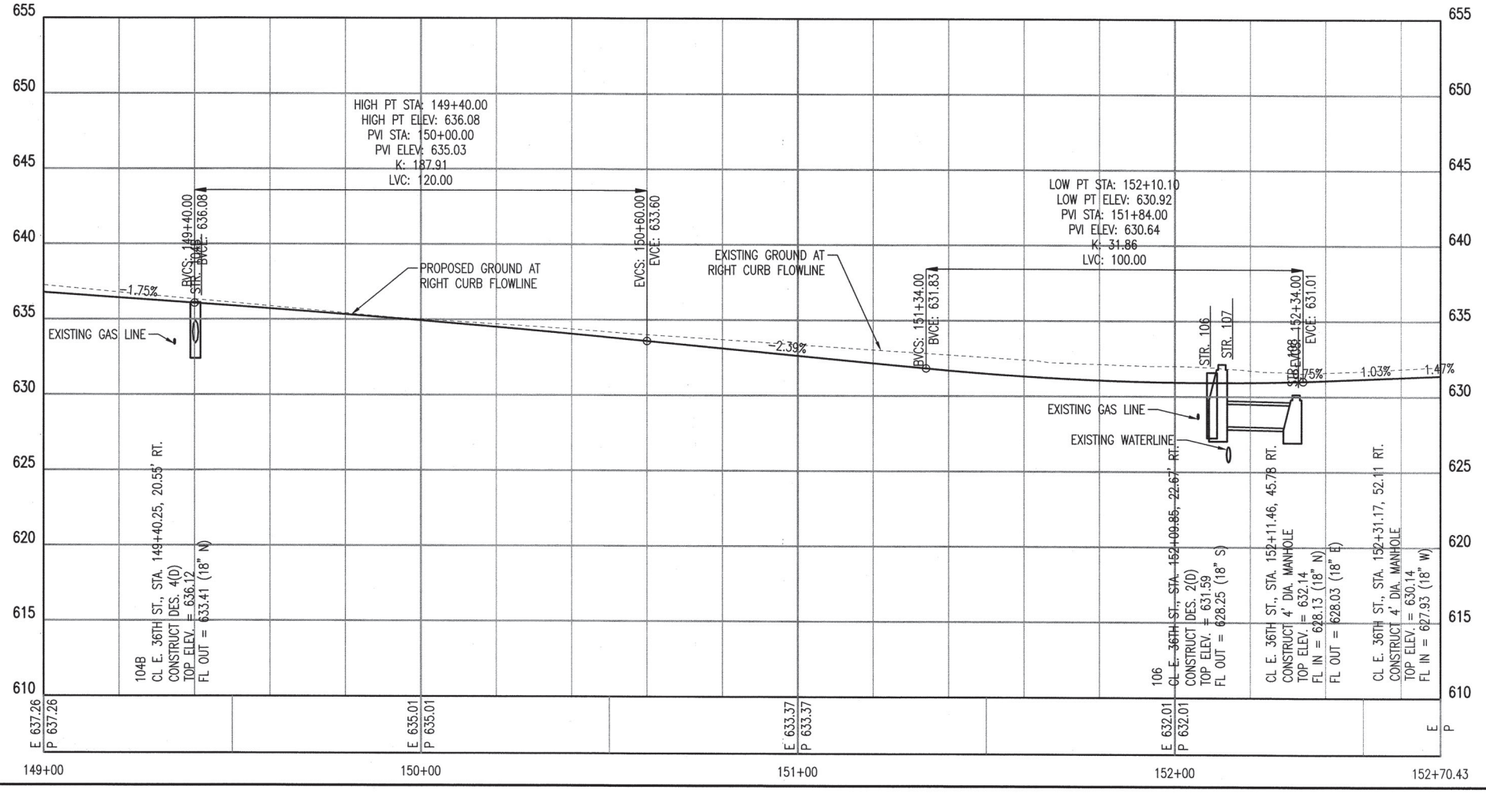

DSNR: XXX PLOTTED BY: $USER$ SCALE: $SCALE$ $DATE$ $TIME$
$FILE$

BEFORE YOU DIG 811 1-800-522-OKIE CALL OKIE

JASON P. DICKMAN 27639 LICENSED PROFESSIONAL ENGINEER OKLAHOMA
07/19/2020

REVISION	BY	DATE

CURB PROFILE 12

PROJECT NO. 144200

ARTERIAL STREET REHABILITATION AND WATERLINE REPLACEMENT – 36TH ST. N. – MLK BLVD TO PEORIA AVE.

CITY OF TULSA, OKLAHOMA
ENGINEERING SERVICES DEPARTMENT

PLANS AND ESTIMATES PREPARED BY: PEC PROFESSIONAL ENGINEERING CONSULTANTS, P.A. 1924 S. UTICA AVE., SUITE 1400 TULSA, OK 74104 918-664-5400 www.pec1.com

PLAN SCALE: 1" =	DRAWN	BFS	01/2020	APPROVED:
	DESIGNED	JPD	01/2020	
	SURVEY			
PROFILE SCALE:	PROJ. MGR.			
HORIZONTAL: 1" = 20'	LEAD ENGR.			
	FIELD MGR.			
VERTICAL 1" = 5'	RECOMMENDED: DESIGN MANAGER			CITY ENGINEER

FILE: DRAWING: DATE: 10/30/20

ATLAS PAGE NO: 218, 219, 281, 282 SHEET 71 OF 165 SHEETS

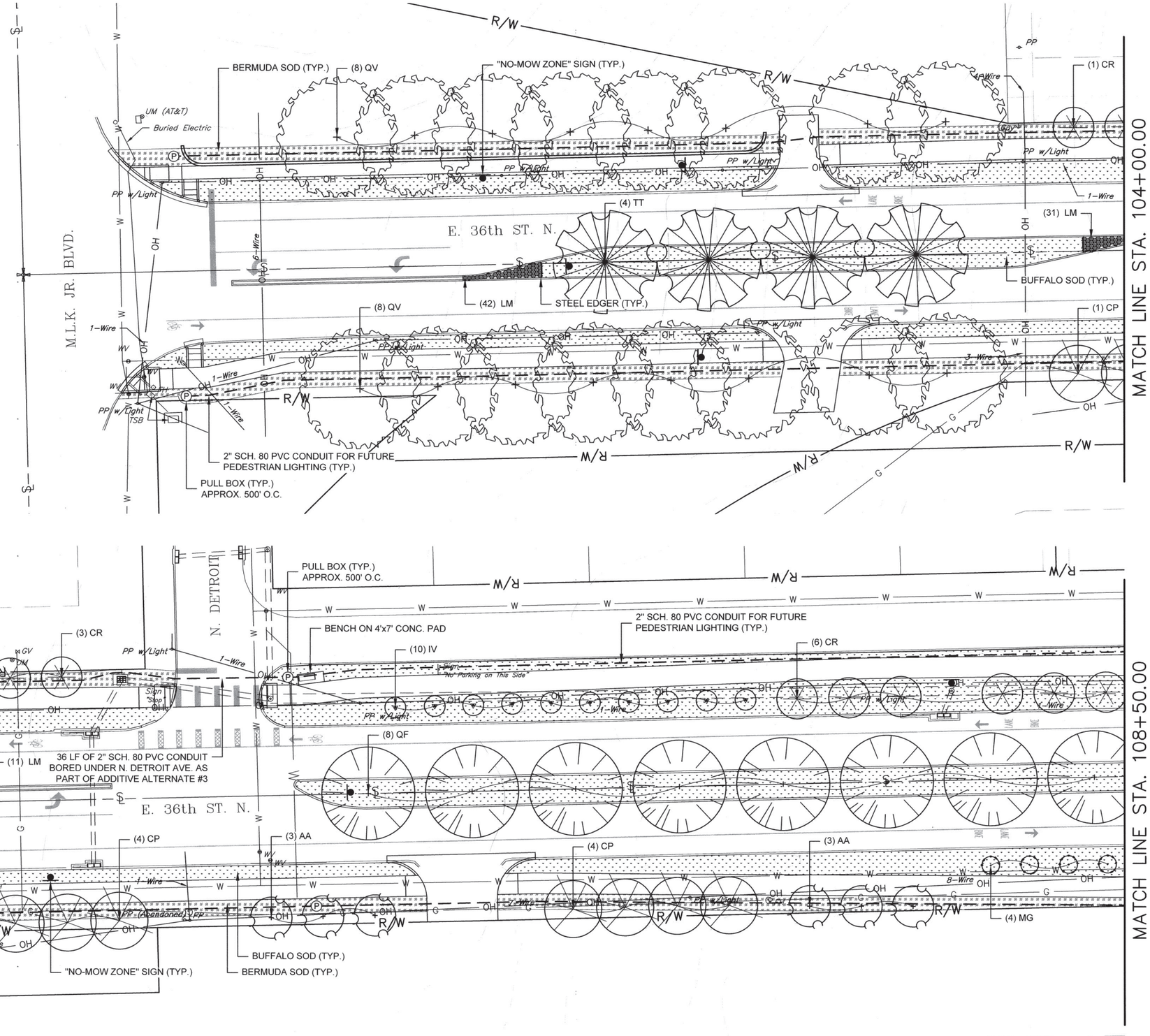

LANDSCAPE LEGEND

KEY	SYM.	COMMON NAME	BOTANICAL NAME
LARGE TREES			
	ZS	JAPANESE ZELKOVA	Zelkova serrata
	TT	SILVER LINDEN	Tilia tomentosa
	QF	SOUTHERN RED OAK	Quercus falcata
MEDIUM TREES			
	QS	SHUMARD OAK	Quercus shumardii
	QV	BLACK OAK	Quercus velutina
SMALL TREES			
	AA	SERVICEBERRY	Amelanchier arborea
	CR	OKLAHOMA REDBUD	Cercis reniformis
	CV	FRINGE TREE	Chionanthus virginicus
	CP	WASHINGTON HAWTHORN	Crataegus phaenopyrum
	IV	YAUPON HOLLY	Ilex vomitoria
	MG	LITTLE GEM MAGNOLIA	Magnolia grandiflora 'Little Gem'
GROUND COVERS			
	LM	BIG BLUE LIRIOPE	Liriope muscari 'Big Blue'
		U3 BERMUDA SOD	
		BUFFALO GRASS SOD	
		STEEL EDGER	

STATE OF OKLAHOMA
KEITH R. FRANKS
No. 5961
TULSA, OKLAHOMA
LANDSCAPE ARCHITECT
7/17/2020

LANDPLAN CONSULTANTS INCORPORATED
1110 West 23rd
Tulsa, OK 74107
(918) 584-6464

BEFORE YOU DIG 811 800-522-OKIE CALL OKIE

1"=20'
0 10 20 40

LANDSCAPE PLANS (1)

PROJECT NO. 144200

ARTERIAL STREET REHABILITATION AND WATERLINE REPLACEMENT – 36TH ST. N. – MLK BLVD TO PEORIA AVE.

CITY OF TULSA, OKLAHOMA
ENGINEERING SERVICES DEPARTMENT

PLANS AND ESTIMATES PREPARED BY: PEC PROFESSIONAL ENGINEERING CONSULTANTS, P.A. CHEROKEE BUILDING 4150 S. 100TH E. AVE., SUITE 401 TULSA, OK 74146 918-664-5400 www.pec1.com

REVISION	BY	DATE

PLAN SCALE: 1" = 20'	DRAWN	BMB	APPROVED:
	DESIGNED	BMB	
	SURVEY		
PROFILE SCALE:	PROJ. MGR.	AAC	9/20
HORIZONTAL: N/A	LEAD ENGR.	KRF	9/20
	FIELD MGR.		
VERTICAL N/A	RECOMMENDED: DESIGN MANAGER	MMS	10-20
			CITY ENGINEER
FILE:	DRAWING:		DATE: 7/17/2020 10/30/20
ATLAS PAGE NO: 218, 219, 281			SHEET 72 OF 154 SHEETS

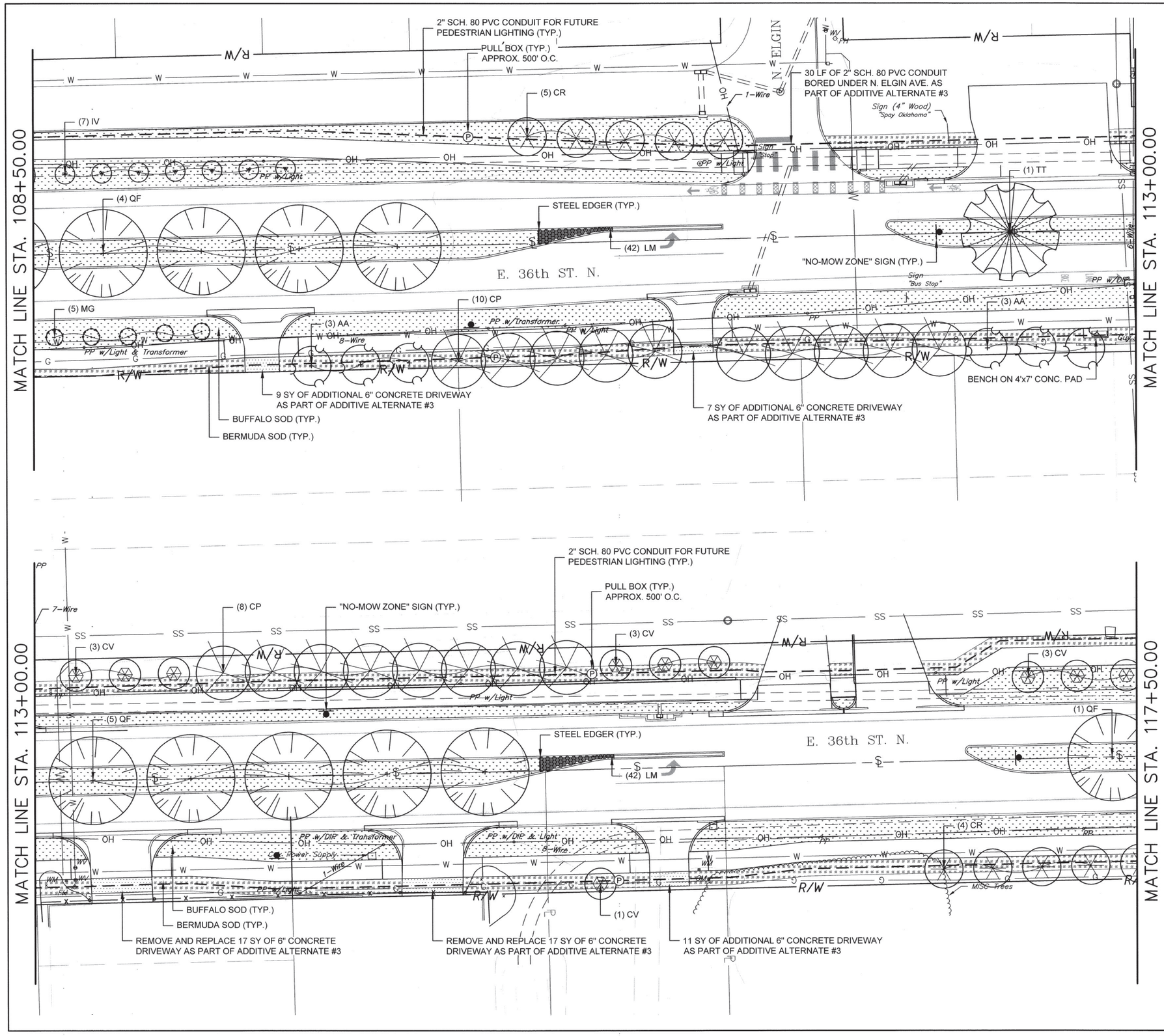

LANDSCAPE LEGEND

KEY	SYM.	COMMON NAME	BOTANICAL NAME
LARGE TREES			
	ZS	JAPANESE ZELKOVA	Zelkova serrata
	TT	SILVER LINDEN	Tilia tomentosa
	QF	SOUTHERN RED OAK	Quercus falcata
MEDIUM TREES			
	QS	SHUMARD OAK	Quercus shumardii
	QV	BLACK OAK	Quercus velutina
SMALL TREES			
	AA	SERVICEBERRY	Amelanchier arborea
	CR	OKLAHOMA REDBUD	Cercis reniformis
	CV	FRINGE TREE	Chionanthus virginicus
	CP	WASHINGTON HAWTHORN	Crataegus phaenopyrum
	IV	YAUPON HOLLY	Ilex vomitoria
	MG	LITTLE GEM MAGNOLIA	Magnolia grandiflora 'Little Gem'
GROUND COVERS			
	LM	BIG BLUE LIRIOPE	Liriope muscari 'Big Blue'
		U3 BERMUDA SOD	
		BUFFALO GRASS SOD	
		STEEL EDGER	

STATE OF OKLAHOMA KEITH R. FRANKLIN No. 94 TULSA, OKLAHOMA LANDSCAPE ARCHITECT
7/17/2020

LANDPLAN CONSULTANTS INCORPORATED
1110 West 23rd
Tulsa, OK 74107
(918) 584-6464

BEFORE YOU DIG CALL OKIE 811 1-800-522-OKIE

1"=20'

0 10 20 40

LANDSCAPE PLANS (2)

PROJECT NO. 144200

ARTERIAL STREET REHABILITATION AND WATERLINE REPLACEMENT – 36TH ST. N. – MLK BLVD TO PEORIA AVE.

CITY OF TULSA, OKLAHOMA
ENGINEERING SERVICES DEPARTMENT

PLANS AND ESTIMATES PREPARED BY: PEC PROFESSIONAL ENGINEERING CONSULTANTS, P.A. CHEROKEE BUILDING 4150 S. 100TH E. AVE., SUITE 401 TULSA, OK 74146 918-664-5400 www.pec1.com

REVISION	BY	DATE

PLAN SCALE: 1" = 20'	DRAWN	BMB	
	DESIGNED	BMB	
	SURVEY		
PROFILE SCALE:	PROJ. MGR.	ARK	9/20
HORIZONTAL: N/A	LEAD ENGR.		9/20
	FIELD MGR.		
VERTICAL N/A	RECOMMENDED: HAS 10-20 DESIGN MANAGER		
FILE:	DRAWING:		
ATLAS PAGE NO:	218, 219, 281		

APPROVED:

CITY ENGINEER

DATE: 7/17/2020 10/30/20

SHEET 73 OF 154 SHEETS

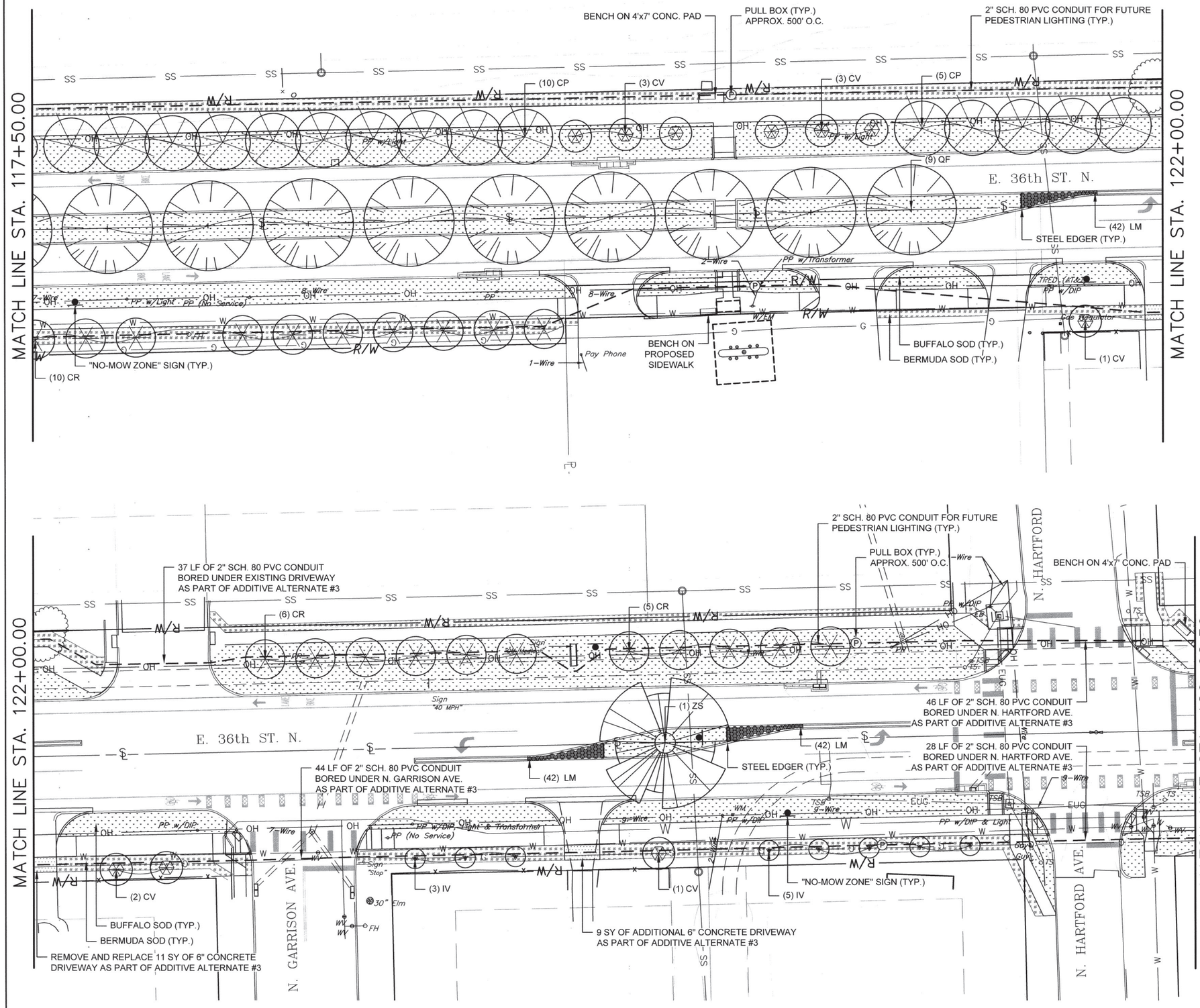

LANDSCAPE LEGEND

KEY	SYM.	COMMON NAME	BOTANICAL NAME
LARGE TREES			
	ZS	JAPANESE ZELKOVA	Zelkova serrata
	TT	SILVER LINDEN	Tilia tomentosa
	QF	SOUTHERN RED OAK	Quercus falcata
MEDIUM TREES			
	QS	SHUMARD OAK	Quercus shumardii
	QV	BLACK OAK	Quercus velutina
SMALL TREES			
	AA	SERVICEBERRY	Amelanchier arborea
	CR	OKLAHOMA REDBUD	Cercis reniformis
	CV	FRINGE TREE	Chionanthus virginicus
	CP	WASHINGTON HAWTHORN	Crataegus phaenopyrum
	IV	YAUPON HOLLY	Ilex vomitoria
	MG	LITTLE GEM MAGNOLIA	Magnolia grandiflora 'Little Gem'
GROUND COVERS			
	LM	BIG BLUE LIRIOPE	Liriope muscari 'Big Blue'
		U3 BERMUDA SOD	
		BUFFALO GRASS SOD	
		STEEL EDGER	

STATE OF OKLAHOMA
KEITH R. FRANKS
No. 1562
REGISTERED
TULSA
OKLAHOMA
LANDSCAPE ARCHITECT
7/17/2020

LANDPLAN CONSULTANTS INCORPORATED
1110 West 23rd
Tulsa, OK 74107
(918) 584-6464

BEFORE YOU DIG
811
1-800-522-OKIE
CALL OKIE

1"=20'
0 10 20 40

REVISION	BY	DATE

PLAN SCALE: 1" = 20'
PROFILE SCALE:
HORIZONTAL: N/A
VERTICAL N/A

DRAWN	BMB	
DESIGNED	BMB	
SURVEY		
PROJ. MGR.	MK	9/20
LEAD ENGR.		9/20
FIELD MGR.		
RECOMMENDED: DESIGN MANAGER	HAS 10.20	

APPROVED: CITY ENGINEER

FILE: DRAWING:
ATLAS PAGE NO: 218, 219, 281
DATE: 7/17/2020 10/20/20
SHEET 74 OF 154 SHEETS

LANDSCAPE PLANS (3)

PROJECT NO. 144200

ARTERIAL STREET REHABILITATION AND WATERLINE REPLACEMENT – 36TH ST. N. – MLK BLVD TO PEORIA AVE.

CITY OF TULSA, OKLAHOMA
ENGINEERING SERVICES DEPARTMENT

PLANS AND ESTIMATES PREPARED BY: PEC PROFESSIONAL ENGINEERING CONSULTANTS, P.A. CHEROKEE BUILDING 4150 S. 100TH E. AVE., SUITE 401 TULSA, OK 74146 918-664-5400 www.pec1.com

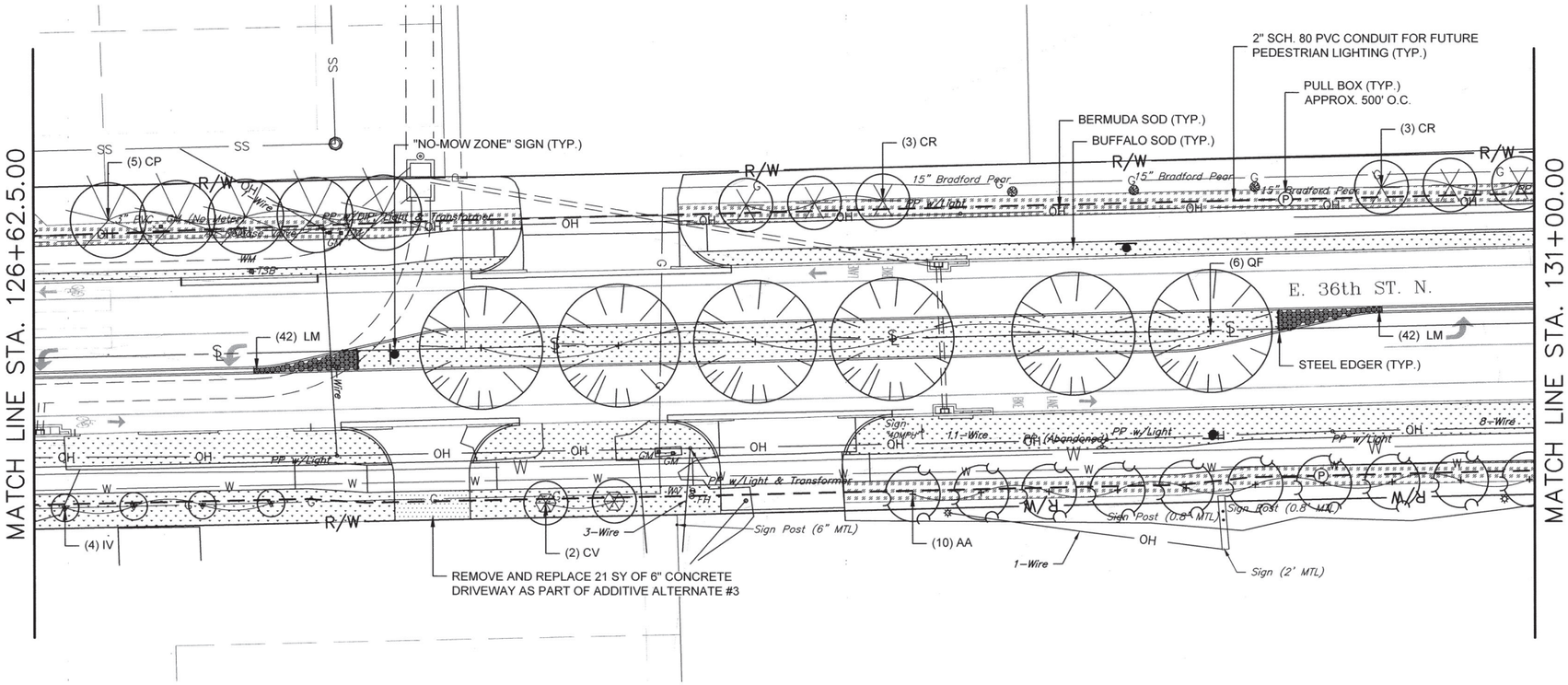

LANDSCAPE LEGEND

KEY	SYM.	COMMON NAME	BOTANICAL NAME
LARGE TREES			
	ZS	JAPANESE ZELKOVA	Zelkova serrata
	TT	SILVER LINDEN	Tilia tomentosa
	QF	SOUTHERN RED OAK	Quercus falcata
MEDIUM TREES			
	QS	SHUMARD OAK	Quercus shumardii
	QV	BLACK OAK	Quercus velutina
SMALL TREES			
	AA	SERVICEBERRY	Amelanchier arborea
	CR	OKLAHOMA REDBUD	Cercis reniformis
	CV	FRINGE TREE	Chionanthus virginicus
	CP	WASHINGTON HAWTHORN	Crataegus phaenopyrum
	IV	YAUPON HOLLY	Ilex vomitoria
	MG	LITTLE GEM MAGNOLIA	Magnolia grandiflora 'Little Gem'
GROUND COVERS			
	LM	BIG BLUE LIRIOPE	Liriope muscari 'Big Blue'
		U3 BERMUDA SOD	
		BUFFALO GRASS SOD	
		STEEL EDGER	

STATE OF OKLAHOMA KEITH R. FRANKLIN No. 94 TULSA, OKLAHOMA LANDSCAPE ARCHITECT
7/17/2020

LANDPLAN CONSULTANTS INCORPORATED
1110 West 23rd
Tulsa, OK 74107
(918) 584-6464

BEFORE YOU DIG CALL OKIE 1-800-522-OKIE 811

1"=20'

0 10 20 40

LANDSCAPE PLANS (4)

PROJECT NO. 144200

ARTERIAL STREET REHABILITATION AND WATERLINE REPLACEMENT – 36TH ST. N. – MLK BLVD TO PEORIA AVE.

CITY OF TULSA, OKLAHOMA
ENGINEERING SERVICES DEPARTMENT

PLANS AND ESTIMATES PREPARED BY: PEC PROFESSIONAL ENGINEERING CONSULTANTS, P.A. CHEROKEE BUILDING 4150 S. 100TH E. AVE., SUITE 401 TULSA, OK 74146 918-664-5400 www.pec1.com

REVISION	BY	DATE

PLAN SCALE: 1" = 20'	DRAWN	BMB	
	DESIGNED	BMB	
	SURVEY		
PROFILE SCALE:	PROJ. MGR.	ARK	9/20
HORIZONTAL: N/A	LEAD ENGR.		9/20
	FIELD MGR.		
VERTICAL N/A	RECOMMENDED: HAS 10.20 DESIGN MANAGER		
FILE:	DRAWING:		
ATLAS PAGE NO:	218, 219, 281		

APPROVED:

CITY ENGINEER

DATE: 7/17/2020 10/20/20

SHEET 75 OF 154 SHEETS

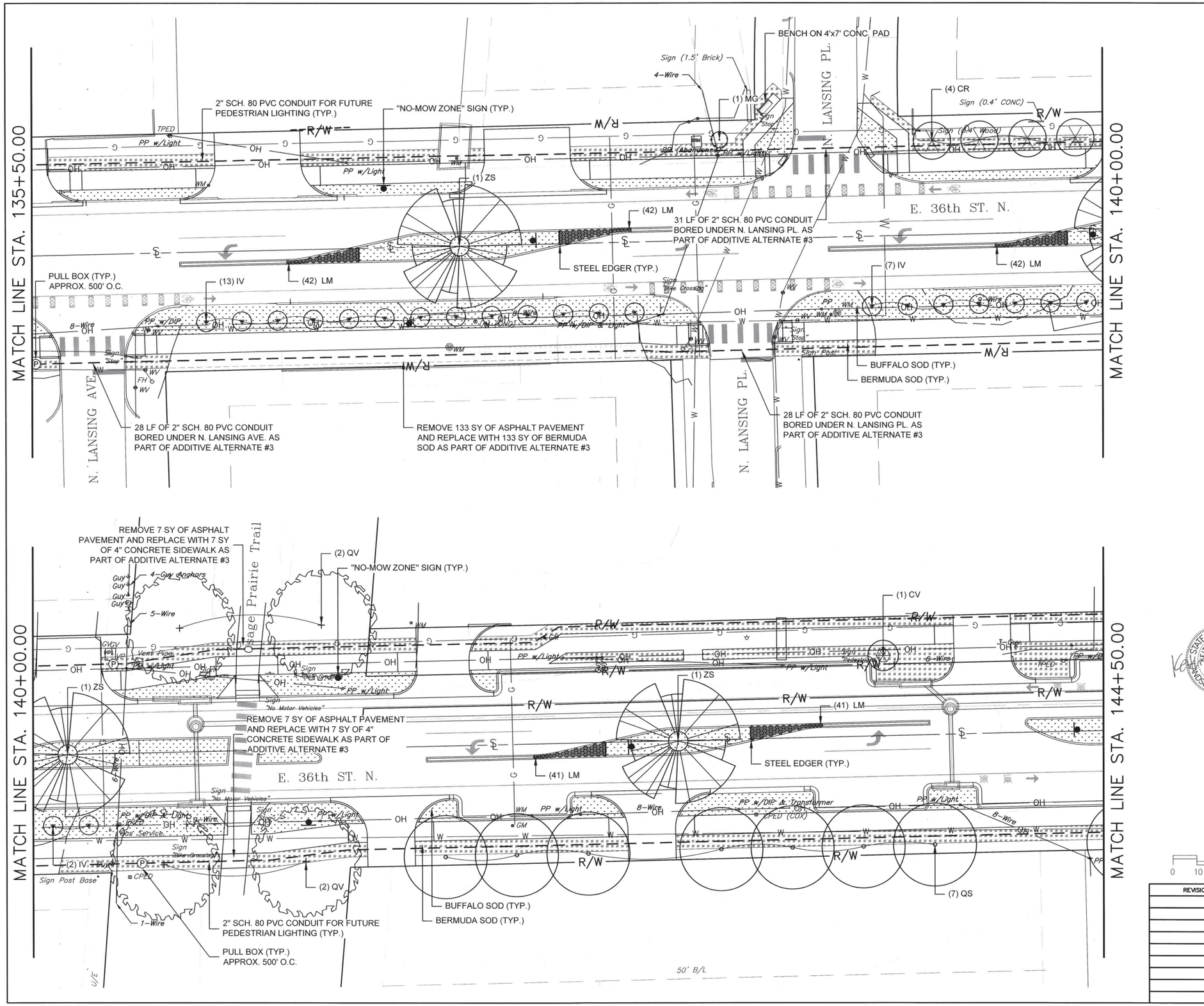

LANDSCAPE LEGEND

KEY	SYM.	COMMON NAME	BOTANICAL NAME
LARGE TREES			
	ZS	JAPANESE ZELKOVA	Zelkova serrata
	TT	SILVER LINDEN	Tilia tomentosa
	QF	SOUTHERN RED OAK	Quercus falcata
MEDIUM TREES			
	QS	SHUMARD OAK	Quercus shumardii
	QV	BLACK OAK	Quercus velutina
SMALL TREES			
	AA	SERVICEBERRY	Amelanchier arborea
	CR	OKLAHOMA REDBUD	Cercis reniformis
	CV	FRINGE TREE	Chionanthus virginicus
	CP	WASHINGTON HAWTHORN	Crataegus phaenopyrum
	IV	YAUPON HOLLY	Ilex vomitoria
	MG	LITTLE GEM MAGNOLIA	Magnolia grandiflora 'Little Gem'
GROUND COVERS			
	LM	BIG BLUE LIRIOPE	Liriope muscari 'Big Blue'
		U3 BERMUDA SOD	
		BUFFALO GRASS SOD	
		STEEL EDGER	

STATE OF OKLAHOMA KEITH R. FRANKLIN No. 94 TULSA, OKLAHOMA LANDSCAPE ARCHITECT
7/17/2020

LANDPLAN CONSULTANTS INCORPORATED
1110 West 23rd
Tulsa, OK 74107
(918) 584-6464

BEFORE YOU DIG CALL OKIE 1-800-522-OKIE 811

1"=20'

0 10 20 40

LANDSCAPE PLANS (5)

PROJECT NO. 144200

ARTERIAL STREET REHABILITATION AND WATERLINE REPLACEMENT – 36TH ST. N. – MLK BLVD TO PEORIA AVE.

CITY OF TULSA, OKLAHOMA
ENGINEERING SERVICES DEPARTMENT

PLANS AND ESTIMATES PREPARED BY: PEC PROFESSIONAL ENGINEERING CONSULTANTS, P.A. CHEROKEE BUILDING 4150 S. 100TH E. AVE., SUITE 401 TULSA, OK 74146 918-664-5400 www.pec1.com

REVISION	BY	DATE

PLAN SCALE: 1" = 20'	DRAWN	BMB	
	DESIGNED	BMB	
	SURVEY		
PROFILE SCALE:	PROJ. MGR.	ARC	9/20
HORIZONTAL: N/A	LEAD ENGR.		9/20
	FIELD MGR.		
VERTICAL N/A	RECOMMENDED: HAS 10.20 DESIGN MANAGER		
FILE:	DRAWING:		
ATLAS PAGE NO: 218, 219, 281			

APPROVED:
CITY ENGINEER
DATE: 7/17/2020 10/30/20
SHEET 76 OF 154 SHEETS

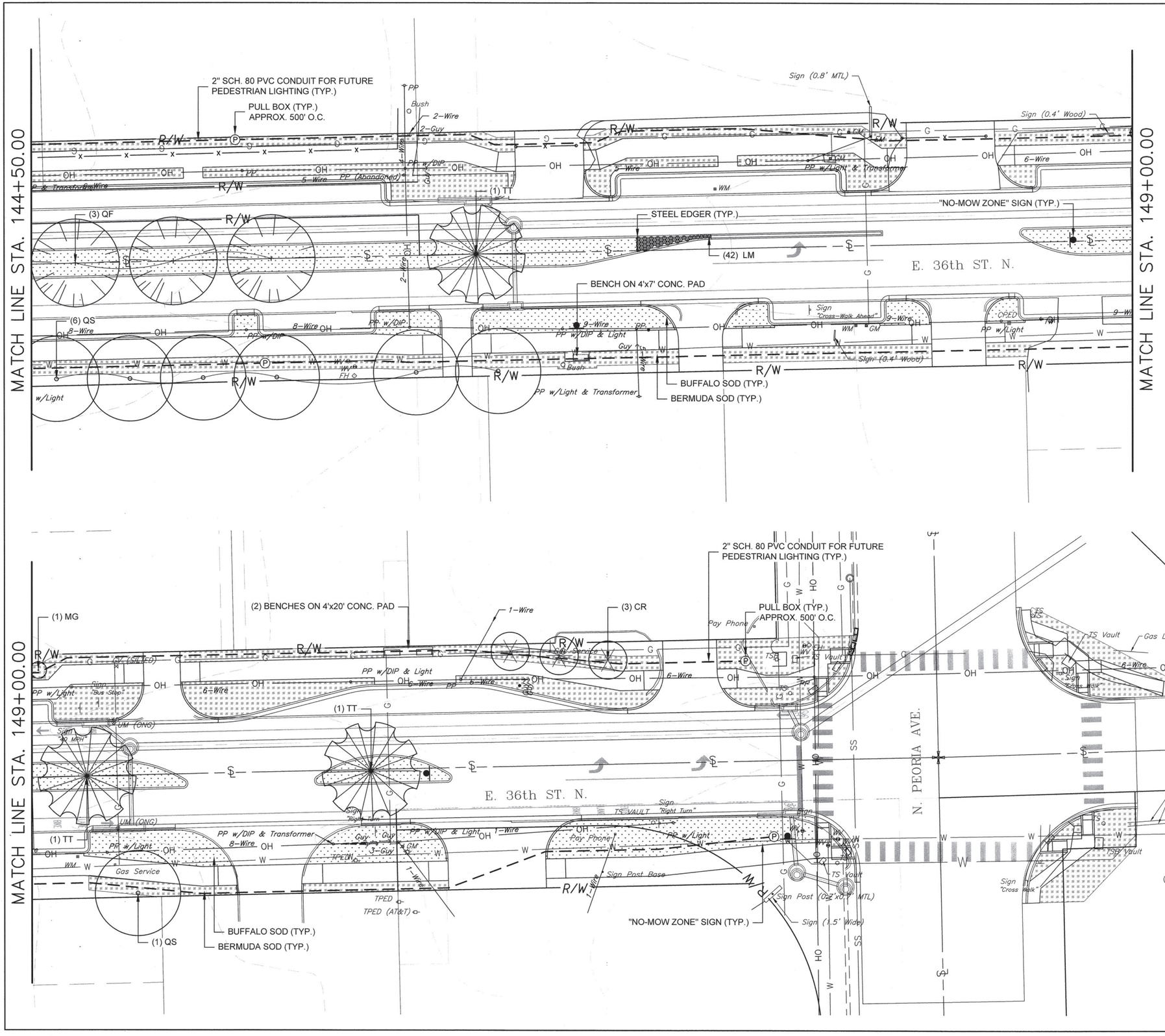

LANDSCAPE LEGEND

KEY	SYM.	COMMON NAME	BOTANICAL NAME
LARGE TREES			
	ZS	JAPANESE ZELKOVA	Zelkova serrata
	TT	SILVER LINDEN	Tilia tomentosa
	QF	SOUTHERN RED OAK	Quercus falcata
MEDIUM TREES			
	QS	SHUMARD OAK	Quercus shumardii
	QV	BLACK OAK	Quercus velutina
SMALL TREES			
	AA	SERVICEBERRY	Amelanchier arborea
	CR	OKLAHOMA REDBUD	Cercis reniformis
	CV	FRINGE TREE	Chionanthus virginicus
	CP	WASHINGTON HAWTHORN	Crataegus phaenopyrum
	IV	YAUPON HOLLY	Ilex vomitoria
	MG	LITTLE GEM MAGNOLIA	Magnolia grandiflora 'Little Gem'
GROUND COVERS			
	LM	BIG BLUE LIRIOPE	Liriope muscari 'Big Blue'
		U3 BERMUDA SOD	
		BUFFALO GRASS SOD	
		STEEL EDGER	

STATE OF OKLAHOMA KEITH R. FRANK No. 94 TULSA, OKLAHOMA LANDSCAPE ARCHITECT
7/17/2020

LANDPLAN CONSULTANTS INCORPORATED
1110 West 23rd
Tulsa, OK 74107
(918) 584-6464

BEFORE YOU DIG CALL OKIE 1-800-522-OKIE

1"=20'

0 10 20 40

LANDSCAPE PLANS (6)

PROJECT NO. 144200

ARTERIAL STREET REHABILITATION AND WATERLINE REPLACEMENT – 36TH ST. N. – MLK BLVD TO PEORIA AVE.

CITY OF TULSA, OKLAHOMA
ENGINEERING SERVICES DEPARTMENT

PLANS AND ESTIMATES PREPARED BY: PEC PROFESSIONAL ENGINEERING CONSULTANTS, P.A. CHEROKEE BUILDING 4150 S. 100TH E. AVE., SUITE 401 TULSA, OK 74146 918-664-5400 www.pec1.com

REVISION	BY	DATE

PLAN SCALE: 1" = 20'	DRAWN	BMB	
	DESIGNED	BMB	
	SURVEY		
PROFILE SCALE:	PROJ. MGR.	ARE	07/20
HORIZONTAL: N/A	LEAD ENGR.	DJ	7/20
	FIELD MGR.	DEW	8/20
VERTICAL N/A	RECOMMENDED: DESIGN MANAGER	HRS	9-20
FILE:	DRAWING:		
ATLAS PAGE NO:	218, 219, 281		

APPROVED:
CITY ENGINEER
DATE: 7/17/2020 10/30/20
SHEET 77 OF 165 SHEETS

F:\589 36th Street North SS\Final\36th ST. N.-FINAL Base.dwg, 7/15/2020 1:34:27 PM

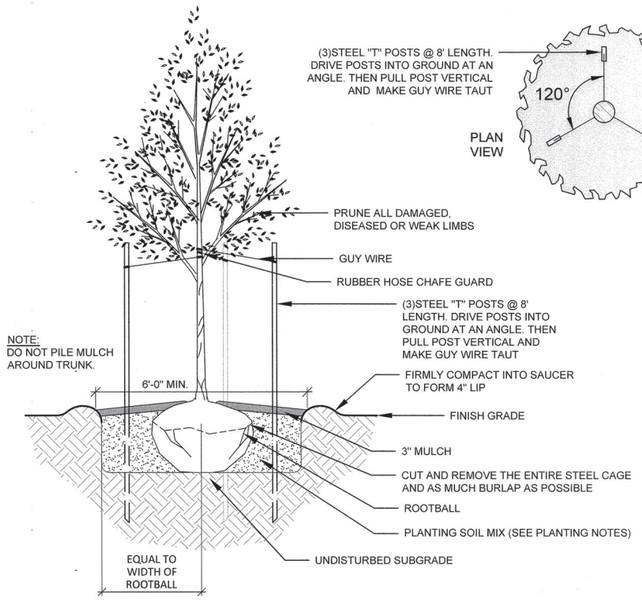

A 78 TREE PLANTING, SINGLE TRUNK

NOT TO SCALE

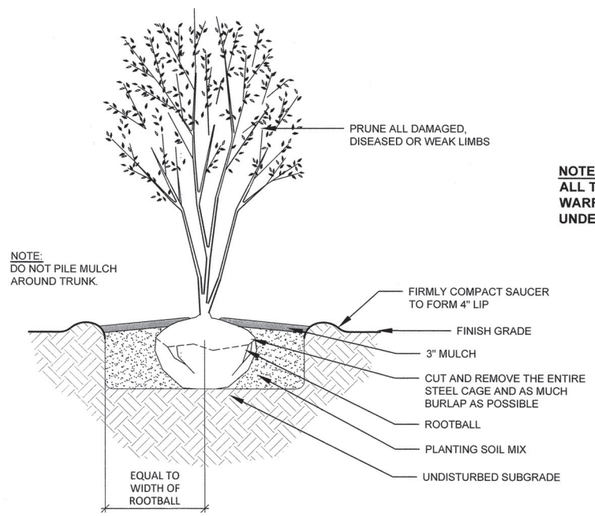

B 78 TREE PLANTING, MULTI-TRUNK

NOT TO SCALE

NOTE:
ALL TREES ARE TO BE INSTALLED AND WARRANTED BY "UP WITH TREES" UNDER A SEPARATE CONTRACT

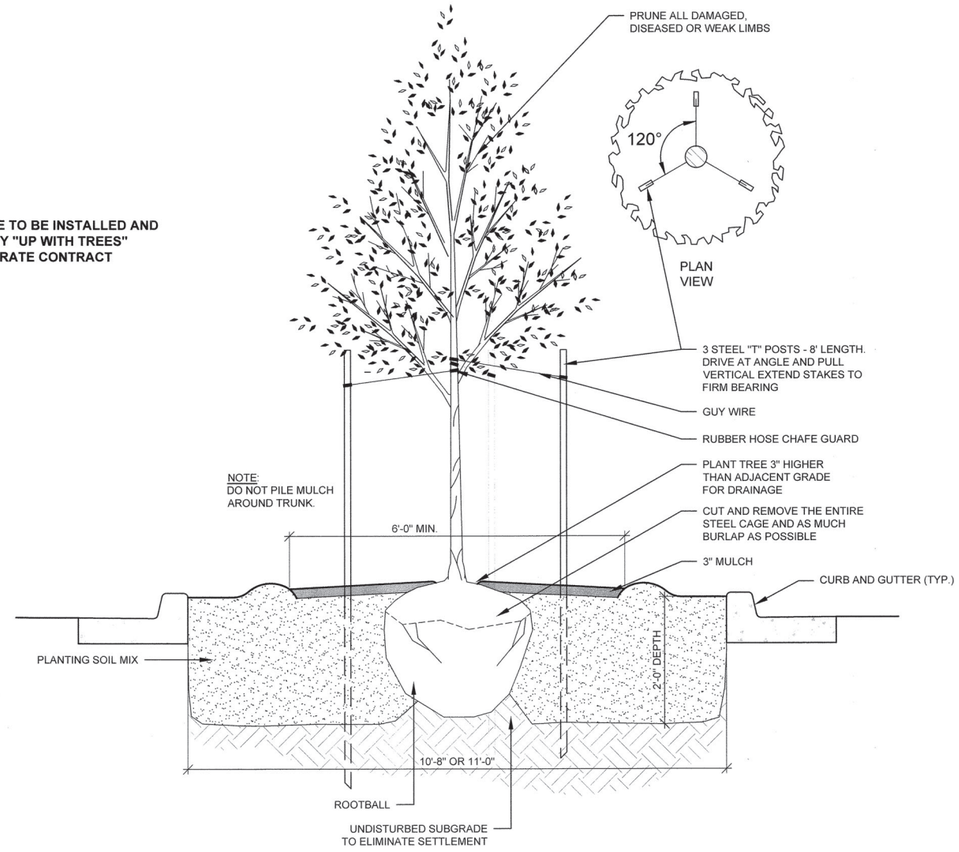

G 78 TREE PLANTING IN RAISED MEDIAN

NOT TO SCALE

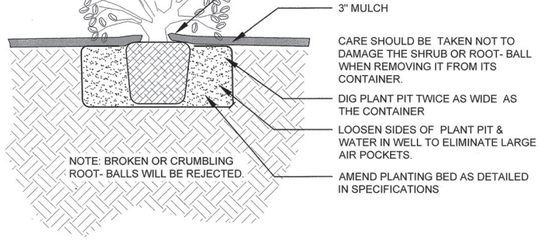

C 78 SHRUB PLANTING

NOT TO SCALE

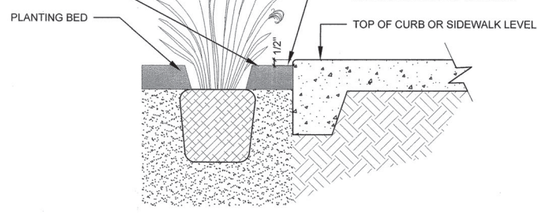

D 78 MULCH ELEVATION NEXT TO CURB OR SIDEWALK

NOT TO SCALE

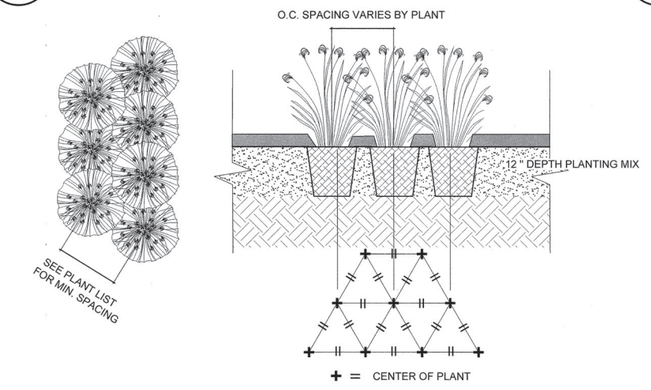

E 78 PLANTING TYPICAL SPACING

NOT TO SCALE

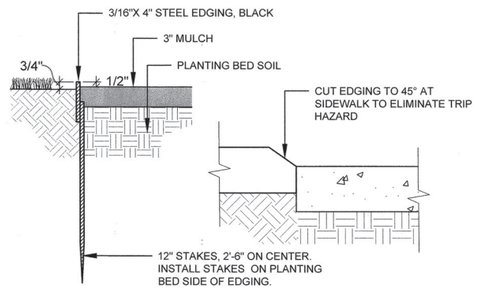

F 78 SECTION-STEEL EDGING WITH ANGLED CORNERS

NOT TO SCALE

LANDPLAN CONSULTANTS INCORPORATED
1110 West 23rd
Tulsa, OK 74107
(918) 584-6464

BEFORE YOU DIG 811 1-800-522-OKIE CALL OKIE

STATE OF OKLAHOMA KEITH R. FRANK No. 9414 TULSA, OKLAHOMA LANDSCAPE ARCHITECT
7/17/2020

REVISION	BY	DATE

LANDSCAPE DETAILS

PROJECT NO. 144200

ARTERIAL STREET REHABILITATION AND WATERLINE REPLACEMENT – 36TH ST. N. – MLK BLVD TO PEORIA AVE.

CITY OF TULSA, OKLAHOMA
ENGINEERING SERVICES DEPARTMENT

PLANS AND ESTIMATES PREPARED BY: PEC PROFESSIONAL ENGINEERING CONSULTANTS, P.A. CHEROKEE BUILDING 4150 S. 100TH E. AVE., SUITE 401 TULSA, OK 74146 918-664-5400 www.pect.com

PLAN SCALE: N/A	DRAWN	BMB	
	DESIGNED	BMB	
	SURVEY		
PROFILE SCALE:	PROJ. MGR.		07/20
	LEAD ENGR.		7/20
HORIZONTAL: N/A	FIELD MGR.		8/20
VERTICAL N/A	RECOMMENDED: DESIGN MANAGER		9-20
FILE:	DRAWING:		DATE: 7/17/2020
ATLAS PAGE NO: 218, 219, 281			SHEET 78 OF 165 SHEETS

APPROVED:

CITY ENGINEER

F:\589 36th Street North SS\Final\36th ST. N.-FINAL Base.dwg, 7/15/2020 1:42:58 PM

SITE AMENITIES - ADDITIVE ALTERNATE #X

SYMBOL	DESCRIPTION	MANUFACTURER "OR EQUAL"	CONTACT	MODEL #	COLOR	NOTES	QTY.
	72" BENCH WITH BACK AND ARMS	VICTOR STANLEY	800-368-2573	CBF-12 BENCH	BLACK	SURFACE MOUNT	10



FURNITURE INSTALLATION NOTES

1) SITE FURNITURE WILL BE PURCHASED BY CONTRACTOR & INSTALLED BY CONTRACTOR AS SHOWN IN PLANS.
2) CONTRACTOR SHALL TAKE CARE NOT TO DAMAGE THE FINISH OF THE SITE FURNITURE DURING INSTALLATION.
3) EQUIPMENT INSTALLER SHALL MOUNT EQUIPMENT PER MANUFACTURER'S SPECIFICATIONS AND RECOMMENDATIONS. MOUNTING AND ASSEMBLY INSTRUCTIONS SHALL BE OBTAINED FROM MANUFACTURER PRIOR TO INSTALLATION. SOME ASSEMBLY REQUIRED.

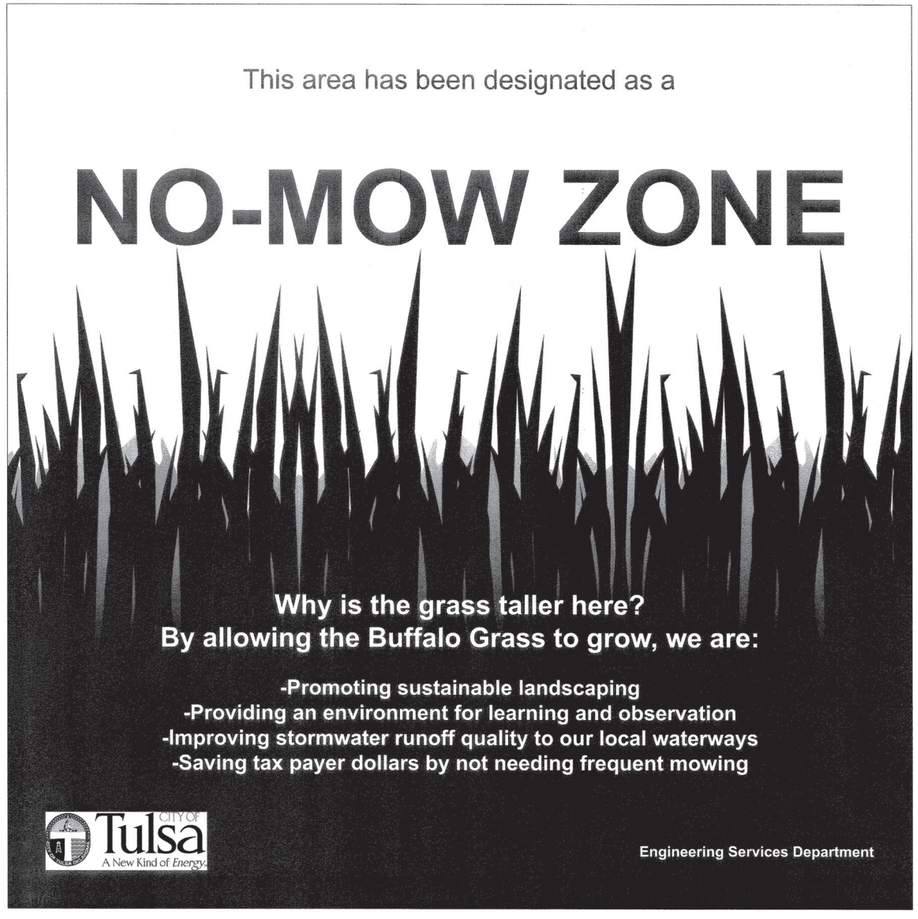

A / 79 — 12" x 12" NO-MOW ZONE SIGN

ACTUAL SIZE IF 22"x34" SIZE SHEET

NOTES:
1. SIGNS SHALL BE PRINT VINYL GRAPHICS LAMINATED TO 12" X 12", .08" THICK ALUMINUM BLANK WITH ROUNDED EDGES.
2. SIGNS SHALL BE MOUNTED WITH GALVANIZED 1.75" PERFORATED POSTS WITH 2" IN-GROUND RECEIVERS.
3. POSTS SHOULD BE ABOUT 3'-0" ABOVE FINISH GRADE. COORDINATE WITH FIELD REPRESENTATIVE FOR OPTIMAL MOUNTING HEIGHT.
4. SIGN ORIENTATION SHALL BE TOWARDS THE PEDESTRIAN ON THE SIDEWALK OR TOWARDS THE MIDDLE TURN LANE FORT THE SIGNS IN THE MEDIANS.

LANDSCAPE PLANT LIST

KEY	SYM.	QTY.	COMMON NAME	BOTANICAL NAME	SIZE
LARGE TREES					
	ZS	(4)	JAPANESE ZELKOVA	Zelkova serrata	3" CAL. B&B 10' - 12' Ht. x 5' - 6' W
	TT	(11)	SILVER LINDEN	Tilia tomentosa	3" CAL. B&B 10' - 12' Ht. x 5' - 6' W
	QF	(36)	SOUTHERN RED OAK	Quercus falcata	3" CAL. B&B 10' - 12' Ht. x 5' - 6' W
MEDIUM TREES					
	QS	(14)	SHUMARD OAK	Quercus shumardii	3" CAL. B&B 10' - 12' Ht. x 5' - 6' W
	QV	(20)	BLACK OAK	Quercus velutina	3" CAL. B&B 10' - 12' Ht. x 5' - 6' W
SMALL TREES					
	AA	(25)	SERVICEBERRY	Amelanchier arborea	30 GAL. 10' - 12' Ht. x 5' - 6' W
	CR	(56)	OKLAHOMA REDBUD	Cercis reniformis	30 GAL. 10' - 12' Ht. x 5' - 6' W
	CV	(27)	FRINGE TREE	Chionanthus virginicus	30 GAL. 10' - 12' Ht. x 5' - 6' W
	CP	(49)	WASHINGTON HAWTHORN	Crataegus phaenopyrum	30 GAL. 10' - 12' Ht. x 5' - 6' W
	IV	(51)	YAUPON HOLLY	Ilex vomitoria	30 GAL. 10' - 12' Ht. x 5' - 6' W
	MG	(11)	LITTLE GEM MAGNOLIA	Magnolia grandiflora 'Little Gem'	30 GAL. 10' - 12' Ht. x 5' - 6' W
GROUND COVERS					
	LM	(712)	BIG BLUE LIRIOPE	Liriope muscari 'Big Blue'	1 GAL. 12" Ht. x 18" W
	U3 BERMUDA SOD				
	BUFFALO GRASS SOD				
	STEEL EDGER				

LANDPLAN CONSULTANTS INCORPORATED
1110 West 23rd
Tulsa, OK 74107
(918) 584-6464

BEFORE YOU DIG 811 1-800-522-OKIE CALL OKIE

STATE OF OKLAHOMA — KEITH R. FRANKLIN — 1409 — TULSA, OKLAHOMA — LANDSCAPE ARCHITECT
7/17/2020

REVISION	BY	DATE

LANDSCAPE SCHEDULES

PROJECT NO. 144200

ARTERIAL STREET REHABILITATION AND WATERLINE REPLACEMENT – 36TH ST. N. – MLK BLVD TO PEORIA AVE.

CITY OF TULSA, OKLAHOMA
ENGINEERING SERVICES DEPARTMENT

PLANS AND ESTIMATES PREPARED BY: PEC — PROFESSIONAL ENGINEERING CONSULTANTS, P.A. CHEROKEE BUILDING 4100 S. 100TH E. AVE., SUITE 401 TULSA, OK 74146 918-664-5400 www.pec1.com

PLAN SCALE: N/A	DRAWN	BMB	
	DESIGNED	BMB	
	SURVEY		
PROFILE SCALE:	PROJ. MGR.		07/20
HORIZONTAL: N/A	LEAD ENGR.		7/20
	FIELD MGR.		8/20
VERTICAL N/A	RECOMMENDED: DESIGN MANAGER		9-20

APPROVED: CITY ENGINEER

FILE: DRAWING: DATE: 7/17/2020 8/25/20

ATLAS PAGE NO: 218, 219, 281 SHEET 79 OF 165 SHEETS

F:\589 36th Street North SS\Final\36th ST. N.-FINAL Base.dwg, 7/15/2020 1:44:23 PM

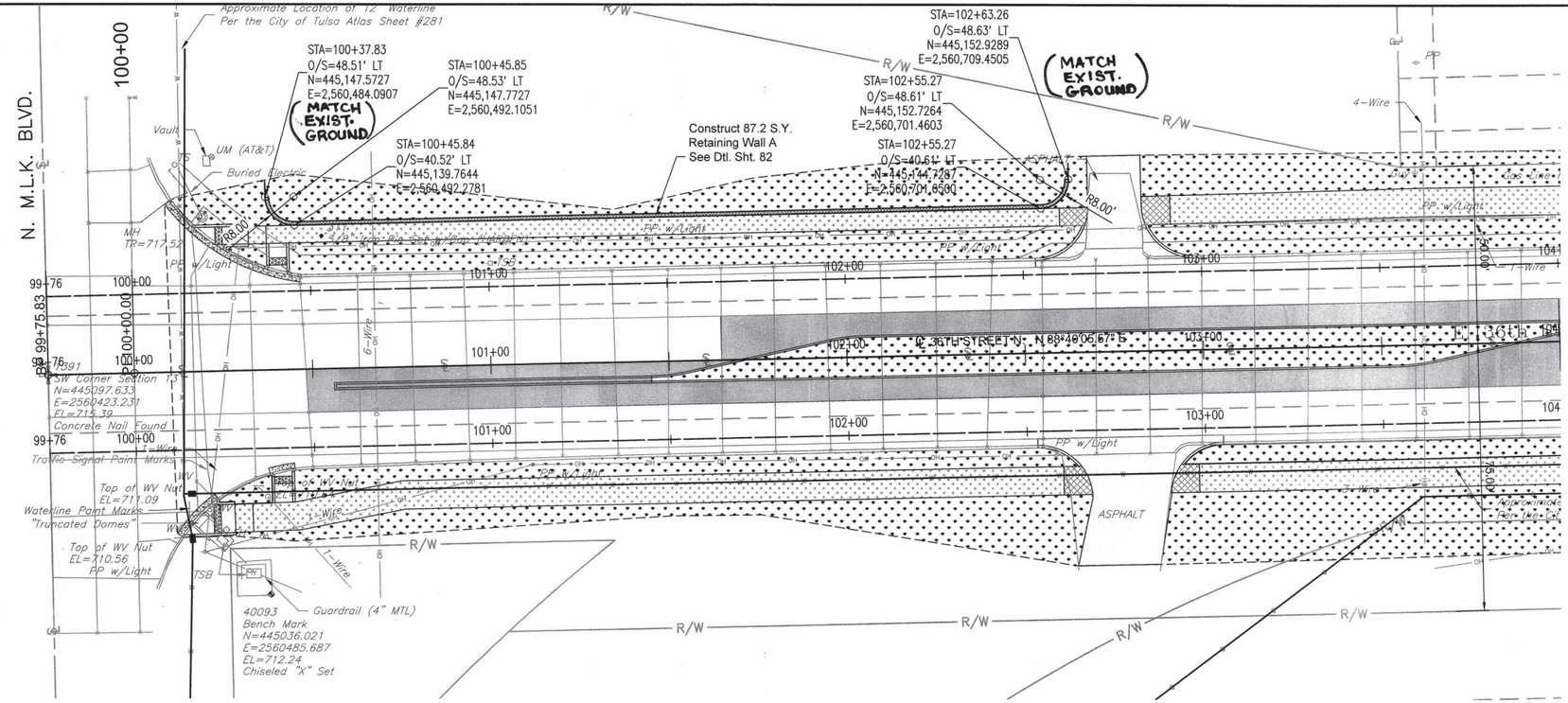

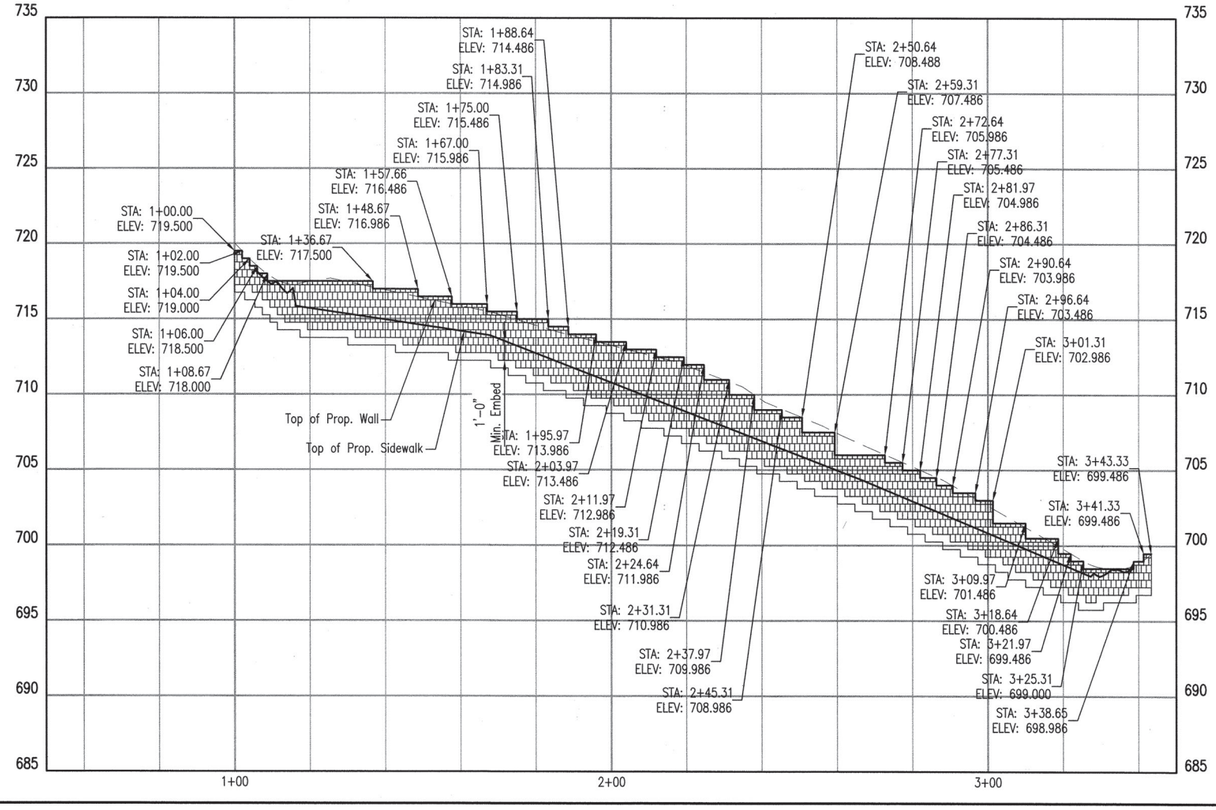



BEFORE YOU DIG 811 1-800-522-OKIE CALL OKIE

LICENSED PROFESSIONAL ENGINEER JASON P. DICKMAN 27639 OKLAHOMA
07/19/2020

REVISION	BY	DATE

RETAINING WALL A PLAN & PROFILE 1

PROJECT NO. 144200

ARTERIAL STREET REHABILITATION AND WATERLINE REPLACEMENT – 36TH ST. N. – MLK BLVD TO PEORIA AVE.

CITY OF TULSA, OKLAHOMA
ENGINEERING SERVICES DEPARTMENT

PLANS AND ESTIMATES PREPARED BY: PEC PROFESSIONAL ENGINEERING CONSULTANTS, P.A. 1924 S. UTICA AVE., SUITE 1400 TULSA, OK 74104 918-664-5400 www.pec1.com

PLAN SCALE: 1" = 20'	DRAWN	BFS	01/2020
	DESIGNED	JPD	01/2020
	SURVEY		
PROFILE SCALE:	PROJ. MGR.		
HORIZONTAL: 1" = 20'	LEAD ENGR.		
	FIELD MGR.		
VERTICAL 1" = 5'	RECOMMENDED: DESIGN MANAGER		

APPROVED: CITY ENGINEER

FILE: DRAWING: DATE: 10/30/20

ATLAS PAGE NO: 218, 219, 281, 282 SHEET 80 OF 165 SHEETS

DSNG: XXX PLOTTED BY: $USER$ SCALE: $SCALE$ $DATE$ $TIME$ $FILE$

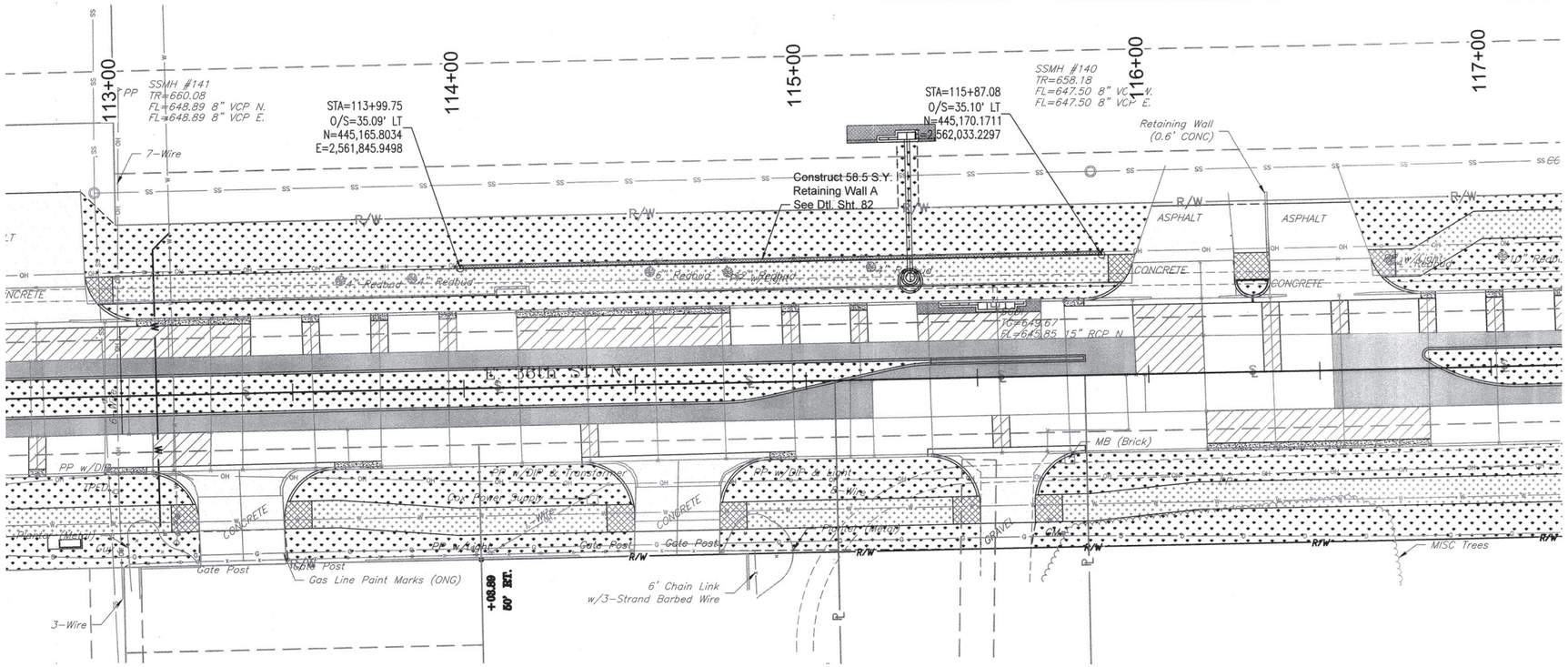

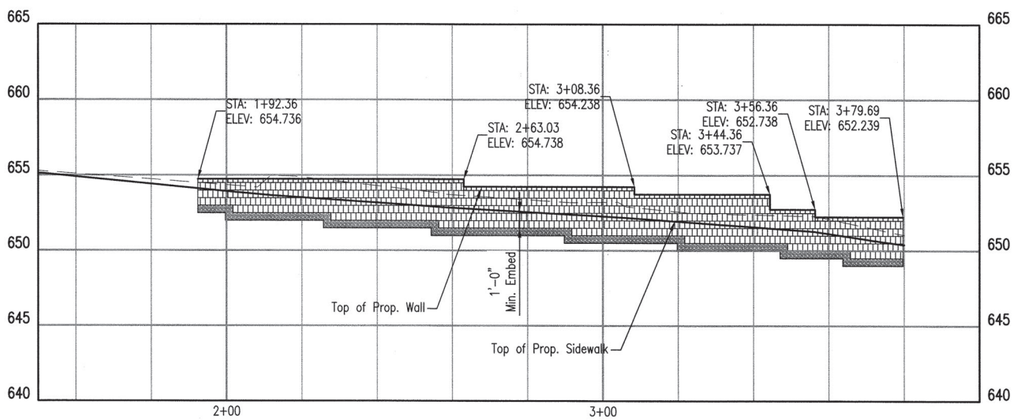

0 10' 20' 40'

BEFORE YOU DIG CALL OKIE 1-800-522-OKIE 811

LICENSED PROFESSIONAL ENGINEER
JASON P. DICKMAN 27639
OKLAHOMA
07/19/2020

REVISION	BY	DATE

RETAINING WALL B PLAN & PROFILE 2

PROJECT NO. 144200

ARTERIAL STREET REHABILITATION AND WATERLINE REPLACEMENT – 36TH ST. N. – MLK BLVD TO PEORIA AVE.

CITY OF TULSA, OKLAHOMA
ENGINEERING SERVICES DEPARTMENT

PLANS AND ESTIMATES PREPARED BY: PEC — PROFESSIONAL ENGINEERING CONSULTANTS, P.A. 1924 S. UTICA AVE., SUITE 1400 TULSA, OK 74104 918-664-5400 www.pect.com

PLAN SCALE: 1" = 20'	DRAWN	BFS	01/2020	APPROVED:
	DESIGNED	JPD	01/2020	
	SURVEY			
PROFILE SCALE:	PROJ. MGR.			
HORIZONTAL: 1" = 20'	LEAD ENGR.			
	FIELD MGR.			
VERTICAL 1" = 5'	RECOMMENDED: DESIGN MANAGER			CITY ENGINEER
FILE:	DRAWING:			DATE:
ATLAS PAGE NO: 218, 219, 281, 282				SHEET 81 OF 165 SHEETS

DSNR: XXX PLOTTED BY: $USER$ SCALE: $SCALE$ $DATE$ $TIME$
$FILE$

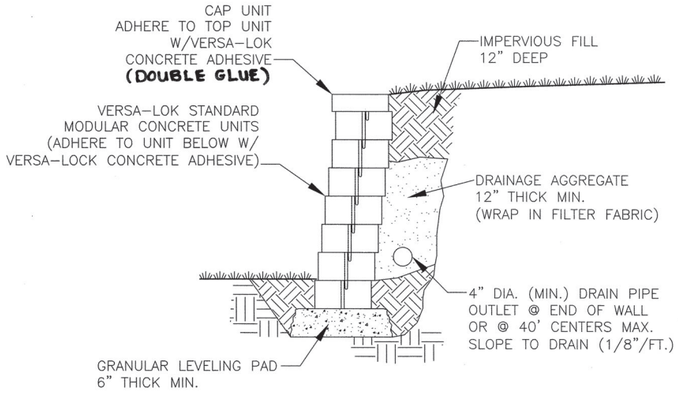

TYPICAL SECTION–UNREINFORCED RETAINING WALL
SCALE: NONE

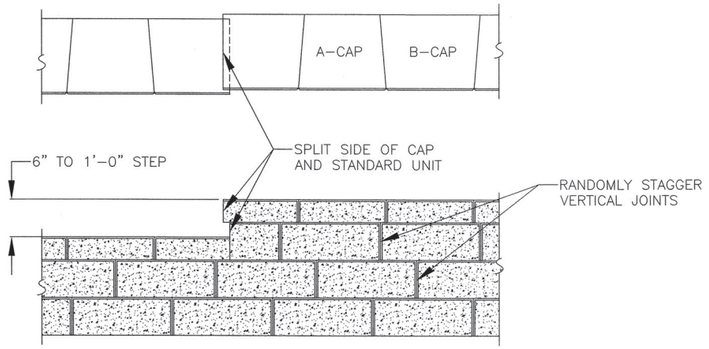

CAPPING DETAIL–PROFILE
STEP AT TOP OF WALL
SCALE: NONE

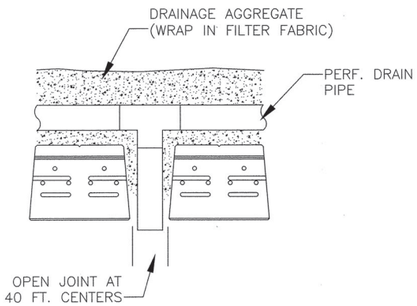

DRAIN DETAIL
SCALE: NONE

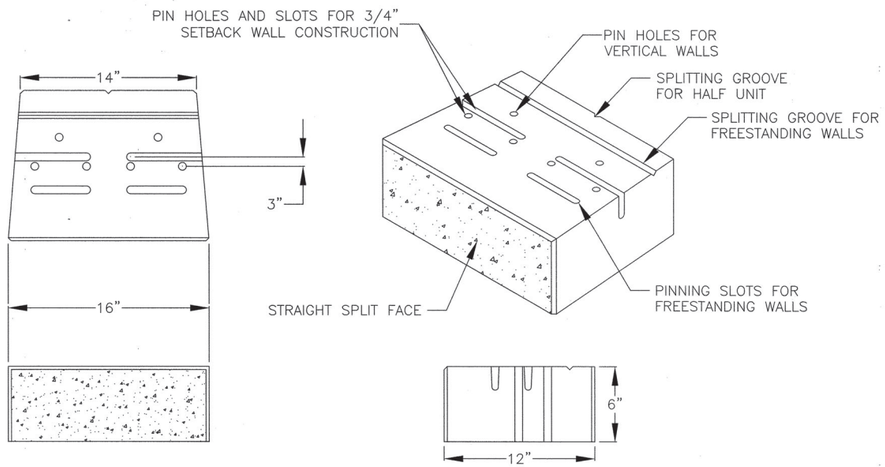

VERSA–LOK UNIT
UNIT DIMENSIONS
SCALE: NONE

DESIGN SOIL PARAMETERS:
MATERIAL TYPE: GRANULAR BACKFILL
UNIT WEIGHT: 125 PCF
FRICTION ANGLE: o|= 34^
COHESION: C = 0 PSF

CORROSION CRITERIA:
IF USING BACKFILL MATERIAL WITH STEEL SOIL REINFORCEMENT, PROVIDE BACKFILL MATERIAL THAT MEETS THE FOLLOWING ELECTROCHEMICAL REQUIREMENTS.
PH OF: 5 TO 10
RESISTIVITY OF: 30 ≤Ohms
CHLORIDES: 100 ppm≤
SULFATES: 200 ppm≤

DESIGN LIFE:
THE MINIMUM DESIGN LIFE OF THE WALLS SHALL BE 50 YEARS. THE EARTH REINFORCEMENT ELEMENTS SHALL BE DESIGNED TO HAVE A CORROSION RESISTANCE-DURABILITY TO ENSURE A MINIMUM DESIGN LIFE OF 50 YEARS. ALL STRESS AND PULLOUT CALCULATIONS SHALL BE DONE ON THE CALCULATED EARTH REINFORCEMENT SECTION REMAINING AFTER 50 YEARS.

EMBEDMENT:
MINIMUM LEVELING PAD EMBEDMENT TO THE TOP OF THE LEVELING PAD SHALL BE 1'-0" BELOW THE PROPOSED GROUND LINE.

RETAINING WALL BACKFILL LIMITS:
THE ASSUMED LIMITS OF THE RETAINING WALL GRANULAR BACKFILL USED FOR THE PURPOSE OF DEFINING LIMITS FOR CONTRACT PAY QUANTITIES PROVIDED IN THE BID PLANS FOR ITEMS OUTSIDE AND ABUTTING THE BACKFILL ARE SHOWN IN THE CROSS SECTIONS. PLAN QUANTITIES FOR EARTHWORK AND RELATED ITEMS ARE COMPUTED ON THIS BASIS. THE ACTUAL LIMITS OF MSE WALL GRANULAR BACKFILL WILL BE IN ACCORDANCE WITH THE APPROVED CONSTRUCTION DETAILS CREATED BY THE WALL PROVIDER.

FOUNDATION INVESTIGATION:
THE FOUNDATION OF THE WALL SYSTEM SHALL BE INSPECTED AND APPROVED BY THE ENGINEER PRIOR TO THE PLACEMENT OF THE AGGREGATE LEVELING PAD AND GRANULAR BACKFILL. PREPARATION OF THE FOUNDATION MATERIAL FOR THE RETAINING WALLS, WHETHER IN-SITU MATERIAL OR NEW EMBANKMENT MATERIAL, SHALL BE COMPACTED TO NOT LESS THAN 95% OF THE STANDARD DENSITY. WHERE NEW EMBANKMENT IS NECESSARY, IT SHALL BE PLACED AND COMPACTED IN 9" LOOSE LIFTS TO NOT LESS THAN 95% OF THE STANDARD DENSITY. FOUNDATION SOILS FOUND TO BE UNSUITABLE BY THE ENGINEER SHALL BE REMOVED AND REPLACED WITH SUITABLE MATERIAL.

REPRESENTATIVE:
A REPRESENTATIVE FROM THE WALL SYSTEM'S COMPANY SHALL BE PRESENT DURING THE INITIAL ERECTION OF THE WALL SYSTEM AND BE AVAILABLE DURING THE CONSTRUCTION OF THE RETAINING WALLS. THE REPRESENTATIVE SHALL SPEND SUFFICIENT TIME WITH THE CONTRACTOR AND THE ENGINEER SO THEY ARE FAMILIAR WITH PROPER ERECTION PROCEDURES.

~~SHOP DRAWINGS:~~
~~ACTUAL RETAINING WALL CONSTRUCTION SHALL CONFIRM TO THE DETAILED DRAWINGS AS SUBMITTED BY THE CONTRACTOR AND APPROVED BY THE ENGINEER. SHOP DRAWINGS SHALL INDICATE WALL LAYOUT, EMBEDMENT DEPTH, AND QUANTITY OF WALL UNITS. SUBMIT 6 SETS OF DETAILED DRAWINGS AND DESIGN CALCULATIONS FOR THE RETAINING WALL SYSTEMS 30 DAYS PRIOR TO CONSTRUCTION, FOR REVIEW AND APPROVAL BY THE ENGINEER. DESIGN CALCULATIONS AND DETAIL DRAWINGS SHALL BEAR THE SEAL OF A PROFESSIONAL ENGINEER IN THE STATE OF OKLAHOMA. THE CONTRACTOR WILL PROVIDE A SAMPLE OF THE BLOCK UNITS TO THE ENGINEER FOR APPROVAL. THE SAMPLE WILL BE A TYPICAL BLOCK IN DIMENSION AND IN COLOR FOR THE RETAINING WALL SYSTEM TO BE USED.~~

~~PAYMENT:~~
~~THE PAYMENT FOR THE RETAINING WALL SHALL BE BASED ON THE LENGTH AS SHOWN ON THE PLAN SHEET. THE RETAINING WALL NOMINAL HEIGHTS (H) MEASURED FROM THE TOP OF THE RETAINING WALL CAP BLOCK TO THE TOP OF LEVELING PAD. THE ACTUAL TOPS OF LEVELING PADS SHALL BE DETERMINED BY THE CONTRACTOR TO PROVIDE SUPPORT FOR THE PROPOSED WALL SYSTEM AND SUBMITTED TO THE ENGINEER FOR APPROVAL. ALL COST INCURRED DURING CONSTRUCTION OF THE RETAINING WALLS SHALL BE INCLUDED IN THE UNIT PRICE BID PER SQUARE YARD OF "RETAINING WALL". THE COST SHALL INCLUDE BUT NOT LIMITED TO: EXCAVATION, BACKFILL, BACKFILL MATERIAL, DRAINAGE SYSTEMS, FILTER FABRICS, PERFORATED AND NON-PERFORATED PIPES, CONCRETE UNITS, LEVELING PAD, ENGINEERING, AND OTHER ASSOCIATED ITEMS.~~

~~THE RETAINING WALL SYSTEM WILL BE THE VERSA-LOK STANDARD BLOCK WALL UNITS AND CAP STONES (TAN COLOR), OR AN APPROVED EQUAL.~~

~~SEE "SUMMARY OF QUANTITIES" SHEET FOR PAY QUANTITIES.~~

1

RETAINING WALL DETAILS
PROJECT NO. 144200
ARTERIAL STREET REHABILITATION AND WATERLINE REPLACEMENT – 36TH ST. N. – MLK BLVD TO PEORIA AVE.

CITY OF TULSA, OKLAHOMA
ENGINEERING SERVICES DEPARTMENT

PLANS AND ESTIMATES PREPARED BY: PEC PROFESSIONAL ENGINEERING CONSULTANTS, P.A. 1924 S. UTICA AVE., SUITE 1400 TULSA, OK 74104 918-664-5400 www.pec1.com

LICENSED PROFESSIONAL ENGINEER JASON P. DICKMAN 27639 OKLAHOMA
07/19/2020

REVISION	BY	DATE

DRAWN	BFS	01/2020	APPROVED:
DESIGNED	JPD	01/2020	
SURVEY			
PROJ. MGR.	A2L 9/20		
LEAD ENGR.			
FIELD MGR.			
RECOMMENDED: DESIGN MANAGER	HAS 9.20		CITY ENGINEER

FILE: DRAWING: DATE: 10/30/20

ATLAS PAGE NO: 218, 219, 281, 282 SHEET 82 OF 165 SHEETS

DSNR: XXX PLOTTED BY: $FILE$ $USER$ SCALE: $SCALE$ $DATE$ $TIME$

N-445,117.5518, E-2,562,722.0673
℄ 36TH, STA. 122+74.51, 33.52' RT.
1 – 12" 45° RJ BEND (ROTATED DOWN)

N-445,123.5075, E-2,562,727.7856
℄ 36TH, STA. 122+80.37, 27.69' RT.
1 – 12" 45° RJ BEND (ROTATED DOWN)
1 – 12" RJ GATE VALVE AND BOX

N-445,123.9461, E-2,562,752.4854
℄ 36TH, STA. 123+05.07, 27.83' RT.
1 – 12" 11 1/4° RJ BEND (VERTICAL)

N-445,124.2436, E-2,562,769.2347
℄ 36TH, STA. 123+21.82, 27.92' RT.
1 – 12"X12" RJ TEE
CONNECT TO EXISTING 12" WATERLINE WITH 12" SOLID SLEEVE

N-445,123.5176, E-2,562,802.3717
℄ 36TH, STA. 123+54.93, 29.42' RT.
1 – 2"X12" TAPPING SADDLE
1 – 2" ARV AND VAULT

N-445,118.9653, E-2,562,827.5899
℄ 36TH, STA. 123+80.34, 34.56' RT.
1 – 12" 11 1/4° RJ BEND

N-445,120.1216, E-2,562,871.9490
℄ 36TH, STA. 124+24.41, 34.43' RT.
1 – 12" 11 1/4° RJ BEND (VERTICAL)

N-445,121.7180, E-2,562,933.1925
℄ 36TH, STA. 124+85.48, 35.78' LT
SERVICE CONNECTION (LONG)

N-445,122.7274, E-2,562,971.9151
℄ 36TH, STA. 125+24.41, 34.15' RT.
1 – 12" 11 1/4° RJ BEND (VERTICAL)

N-445,140.2928, E-2,563,087.7648
℄ 36TH, STA. 3+76.20, 14.75' LT.
CUT-IN 6" 45° RJ BEND (ROTATED DOWN)
1 – 6" 45° RJ BEND (ROTATED UP)
CONNECT EXISTING 6" WATERLINE TO PROPOSED 12" WATERLINE AT CROSS

CUT AND CAP EXISTING 12" WATERLINE

CAUTION!!! Existing 24" Storm

CAUTION!!! Overhead Electric

CAUTION!!! Existing 24" Storm

CAUTION!!! Overhead Electric

CAUTION!!! Overhead Electric

CAUTION!!! Existing 8" Sanitary Sewer

Electric Line Paint Marks

Electric Line Paint Marks

E. 36th ST. N.

N. GARRISON AVENUE

N. HARTFORD AVENUE

MATCH LINE STA. 127+15.34

125+00

Top of WV Nut EL=642.12

Top of WV Nut EL=635.90

Top of WV Nut EL=635.49

Top of WV Nut EL=638.56

12.21' TO FOC

15.70' TO ROW

PRES. R/W

N-445,110.5135, E-2,562,722.2103
℄ 36TH, STA. 122+74.49, 40.56' RT.
BEGIN WL-1
CONNECT TO EXISTING 12" WATERLINE
1 – 12"X12" RJ TEE
1 – 12" RJ GATE VALVE AND BOX

CUT AND CAP EXISTING 12" WATERLINE

N-445,124.7126, E-2,562,795.7521
℄ 36TH, STA. 123+48.34, 28.07' RT.
1 – 12" 11 1/4° RJ BEND (ROTATED DOWN)

ABANDON IN PLACE 450 L.F. 12" WATERLINE AND SALVAGE VALVES

N-445,124.3012, E-2,562,772.4823
℄ 36TH, STA. 123+25.07, 27.94' RT.
1 – 12" 11 1/4° RJ BEND (VERTICAL)

N-445,120.9951, E-2,562,905.4576
℄ 36TH, STA. 124+57.93, 34.34' RT.
1 – 12" 11 1/4° RJ BEND (VERTICAL)

N-445,121.5074, E-2,562,925.1130
℄ 36TH, STA. 124+77.54, 29.38' RT.
SERVICE CONNECTION (SHORT)

INSTALL 450 L.F. 12" DIP WATERLINE

N-445,121.9456, E-2,562,941.9252
℄ 36TH, STA. 124+94.41, 34.23' RT.
1 – 12" 11 1/4° RJ BEND (VERTICAL)

N-445,124.4271, E-2,563,037.1213
℄ 36TH, STA. 125+89.64, 33.97' RT.
1 – 12" RJ GATE VALVE AND BOX

N-445,122.7925, E-2,562,974.4142
℄ 36TH, STA. 125+26.91, 34.14' RT.
1 – 2"X12" TAPPING SADDLE
1 – 2" ARV AND VAULT

INSTALL 33 L.F. 6" DIP WATERLINE

N-445,109.9709, E-2,563,089.1022
℄ 36TH, STA. 126+41.27, 49.63' RT.
CUT-IN 6" 45° RJ BEND (ROTATED UP)
1 – 6" 45° RJ BEND (ROTATED DOWN)
1 – 6" RJ GATE VALVE AND BOX
CONNECT EXISTING 6" WATERLINE TO PROPOSED 12" WATERLINE AT CROSS

N-445,125.4796, E-2,563,085.1160
℄ 36TH, STA. 126+37.65, 34.03' RT.
1 – 12"X6" RJ CROSS
CONNECT TO EXISTING 6" WATERLINE
1 – 12" RJ GATE VALVE AND BOX

SCALE 1"=20'

LEGEND

– ABANDONED PIPE

* PRIOR TO BEGINNING CONNECTION, THE CONTRACTOR SHALL EXCAVATE THE EXISTING 12" WATERLINE AT STATION 0+00 WL–1, TO VERIFY PIPE SIZE, TYPE, FITTINGS, AND HORIZONTAL AND VERTICAL LOCATION. THE CONTRACTOR SHALL REPORT HIS FINDINGS TO THE ENGINEER SO THAT ANY NECESSARY PLAN MODIFICATIONS CAN BE MADE. ANY ADDITIONAL LABOR OR MATERIALS NECESSARY TO COMPLETE THE CONNECTION SHALL BE CONSIDERED SUBSIDIARY TO THE PROJECT.

WATERLINE NO. 1

WL–1, STA. 122+74.49, 40.56' RT. BEGIN WL–1
CONNECT TO EXISTING 12" WATERLINE
1 – 12"X12" RJ TEE
1 – 12" RJ GATE VALVE AND BOX

WL–1, STA. 1+22+74.51, 33.52' RT.
1 – 12" 45° RJ BEND (ROTATED DOWN)

WL–1, STA. 122+80.37, 27.69' RT.
1 – 12" 45° RJ BEND (ROTATED DOWN)
1 – 12" RJ GATE VALVE AND BOX

WL–1, STA. 123+05.07, 27.83' RT.
1 – 12" 11 1/4° RJ BEND (VERTICAL)

Exist. 24" RCP N.
℄ = 636.60'

Exist. 12" Waterline
Assumed 634.20

WL–1, STA. 123+21.82, 27.92' RT.
1 – 12"X12" RJ TEE
CONNECT TO EXISTING 12" WATERLINE WITH 12" SOLID SLEEVE

WL–1, STA. 123+25.07, 27.94' RT.
1 – 12" 11 1/4° RJ BEND (VERTICAL)

WL–1, STA. 123+48.34, 28.07' RT.
1 – 12" 11 1/4° RJ BEND (ROTATED DOWN)

WL–1, STA. 123+54.93, 29.42' RT.
1 – 2"X12" TAPPING SADDLE
1 – 2" ARV AND VAULT

WL–1, STA. 123+80.34, 34.56' RT.
1 – 12" 11 1/4° RJ BEND

WL–1, STA. 124+24.41, 34.43' RT.
1 – 12" 11 1/4° RJ BEND (VERTICAL)

WL–1, STA. 124+57.93, 34.34' RT.
1 – 12" 11 1/4° RJ BEND (VERTICAL)

Exist. 8" SS
℄ = 634.58'

Exist. 66" RCP N.E.
℄ = 633.80'

WL–1, STA. 124+94.41, 34.23' RT.
1 – 12" 11 1/4° RJ BEND (VERTICAL)

WL–1, STA. 125+24.41, 34.15' RT.
1 – 12" 11 1/4° RJ BEND (VERTICAL)

WL–1, STA. 125+26.91, 34.14' RT.
1 – 2"X12" TAPPING SADDLE
1 – 2" ARV AND VAULT

WL–1, STA. 126+37.65, 34.03' RT.
1 – 12"X6" RJ CROSS
CONNECT TO EXISTING 6" WATERLINE
1 – 12" RJ GATE VALVE AND BOX

48" MIN.

2' CLEARANCE

2' CLEARANCE

MATCH LINE STA. 127+15.34

300 L.F. 12" RJ DIP WATERLINE

40 L.F. 12" DIP WATERLINE

80 L.F. 12" RJ DIP WATERLINE

30 L.F. 12" DIP WATERLINE

	123+00	124+00	125+00	126+00	127+00
Existing Ground	643.3	643.2	643.1	643.5	643.3
Top of Pipe	640.70	640.70	634.55	638.93	638.90

	123+00	124+00	125+00	126+00	127+00
Existing Ground	643.3	643.2	643.1	643.5	643.3
Top of Pipe	640.70	640.70	634.55	638.93	638.90

	123+00	124+00	125+00	126+00	127+00
Existing Ground	643.1	642.7	642.7	642.6	642.0
Top of Pipe	631.74	638.46	637.76	636.78	634.50

	123+00	124+00	125+00	126+00	127+00
Existing Ground	643.1	643.1	642.4	642.4	641.2
Top of Pipe	631.74	631.74	631.74	636.78	634.85

	123+00	124+00	125+00	126+00	127+00
Existing Ground	643.1	642.7	642.4	642.4	641.5
Top of Pipe	631.74	638.46	637.76	636.78	634.85

	123+00	124+00	125+00	126+00	127+00
Existing Ground	643.1	642.7	642.4	642.4	641.5
Top of Pipe	631.74	638.46	637.76	636.78	634.85

	123+00	124+00	125+00	126+00	127+00
Existing Ground	643.1	642.7	642.4	642.4	641.7
Top of Pipe	631.74	638.46	637.76	636.78	634.50

655 650 645 640 635 630 625 620 615

JASON P DICKMAN 27639 LICENSED PROFESSIONAL ENGINEER OKLAHOMA

07/19/2020

BEFORE YOU DIG 811 1-800-522-OKIE CALL OKIE

PLAN AND PROFILE WL–1

PROJECT NO. 144200, TMUA-WL5-04

ARTERIAL STREET REHABILITATION AND WATERLINE REPLACEMENT – 36TH ST. N. – MLK BLVD. TO PEORIA AVE.

CITY OF TULSA, OKLAHOMA
ENGINEERING SERVICES DEPARTMENT

PLANS AND ESTIMATES PREPARED BY: PEC PROFESSIONAL ENGINEERING CONSULTANTS, P.A. 1924 S. UTICA AVE., SUITE 1400 TULSA, OK 74104 918-664-5400 www.pec1.com C.O.A. 1046 PE/LS EXPIRES: JUNE 30, 2021

REVISION	BY	DATE

PLAN SCALE: 1" = 20'
PROFILE SCALE: HORIZONTAL: 1" = 20' VERTICAL 1" = 5'

DRAWN	BFS	01/2020	APPROVED:
DESIGNED	JPD	01/2020	
SURVEY			
PROJ. MGR.	JPH	8/20	
LEAD ENGR.	CTW	8/20/20	
FIELD MGR.		8/20	
RECOMMENDED: DESIGN MANAGER		9-2	CITY ENGINEER

FILE: DRAWING: DATE: 10/30/20

ATLAS PAGE NO: 218, 219, 281, 282 SHEET 83 OF 165 SHEETS

Saved 07-19-2020 8:36:57 PM by JASON.DICKMAN
Plot Scale 1:1 07-19-2020 8:44:59 PM by TAYLOR.WOODS
U:\Tulsa\2015\15K40\000\Mun\Drawings\15K40-C-WLPP01

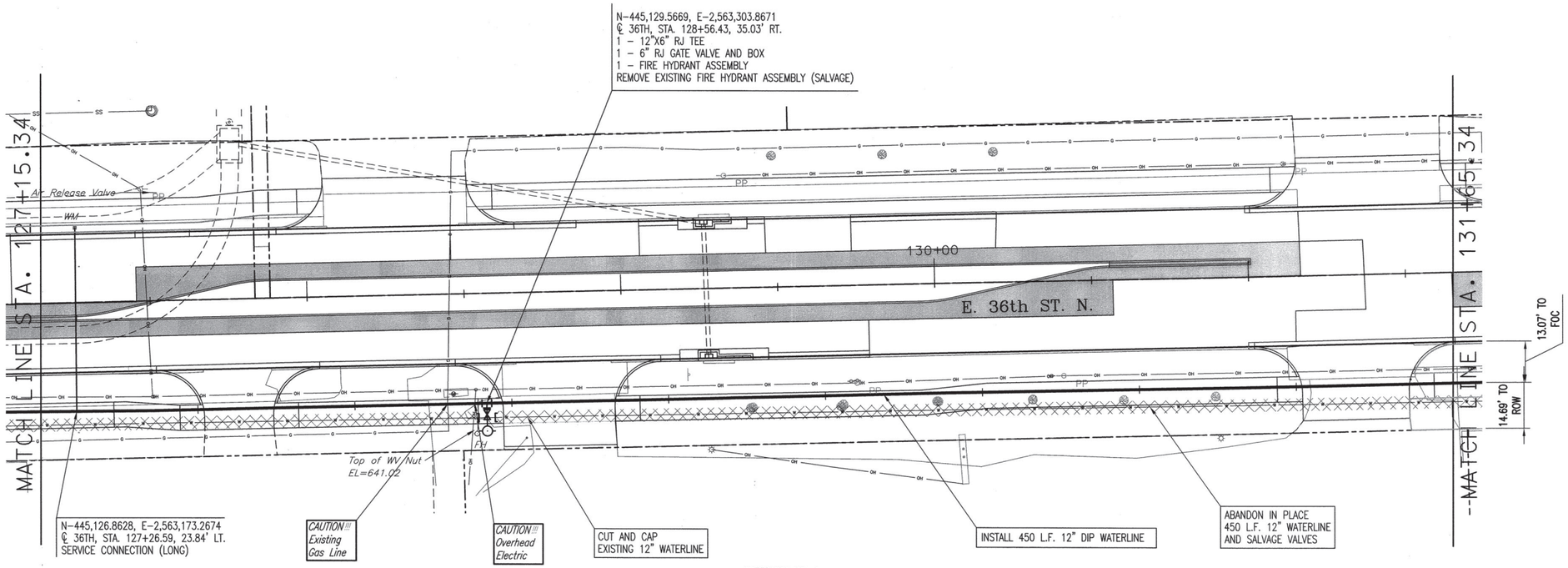

SCALE 1"=20'

LEGEND

– ABANDONED PIPE

WATERLINE NO. 1

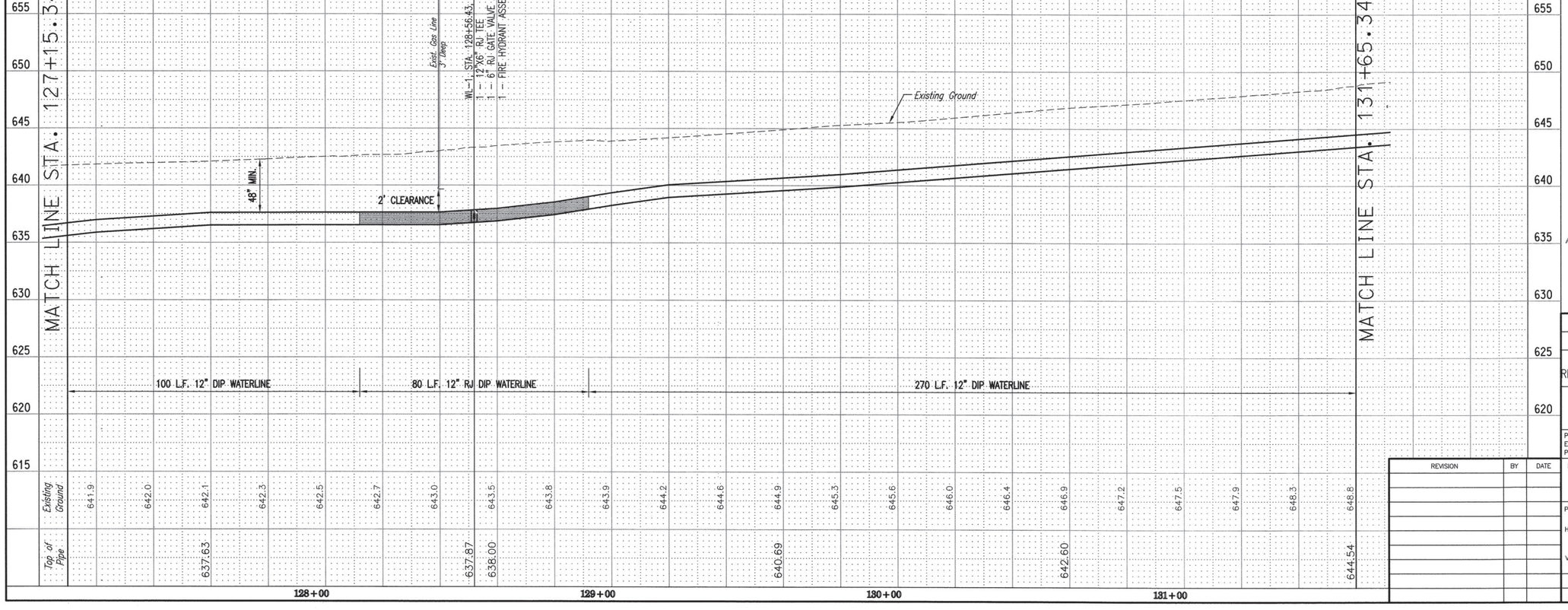

| | | |

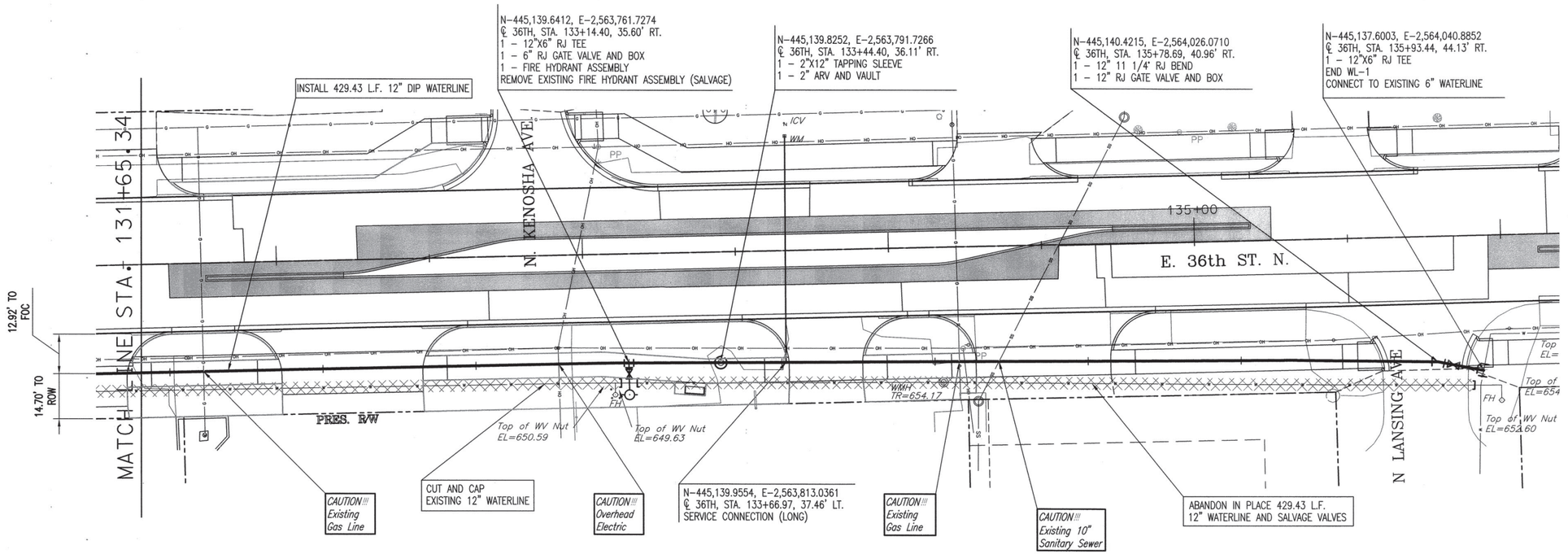

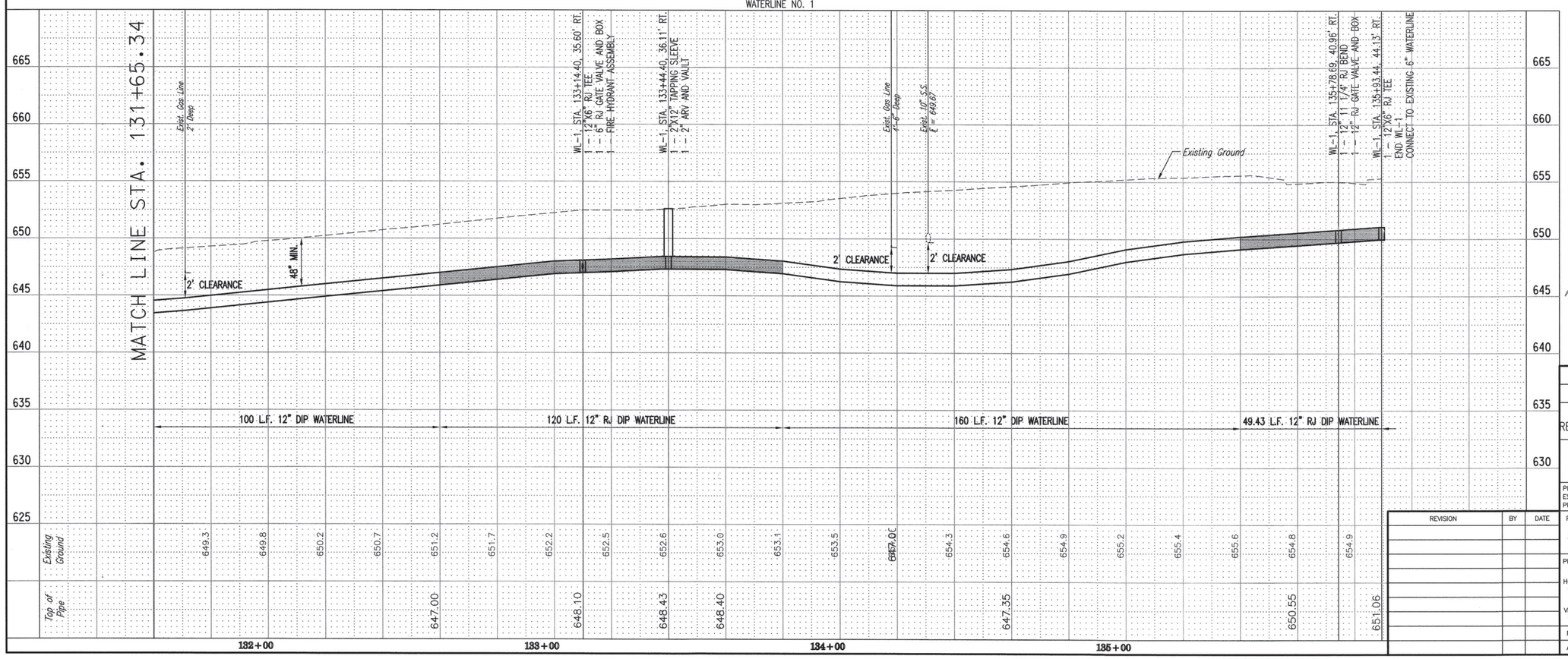

REVISION	BY	DATE

JASON P. DICKMAN 27639 LICENSED PROFESSIONAL ENGINEER OKLAHOMA
07/19/2020

BEFORE YOU DIG 1-800-522-OKIE CALL OKIE

PLAN AND PROFILE WL-1

PROJECT NO. 144200, TMUA-W15-04

ARTERIAL STREET REHABILITATION AND WATERLINE REPLACEMENT - 36TH ST. N. - MLK BLVD. TO PEORIA AVE.

CITY OF TULSA, OKLAHOMA
ENGINEERING SERVICES DEPARTMENT

PLANS AND ESTIMATES PREPARED BY: PEC PROFESSIONAL ENGINEERING CONSULTANTS, P.A. 1924 S. UTICA AVE., SUITE 1400 TULSA, OK 74104 918-664-5400 www.pec1.com C.O.A. 1046 PE/LS EXPIRES: JUNE 30, 2021

PLAN SCALE: 1" = 20'	DRAWN	BFS	01/2020	APPROVED:
	DESIGNED	JPD	01/2020	
	SURVEY			
PROFILE SCALE:	PROJ. MGR.	JPD	9/20	
HORIZONTAL: 1" = 20'	LEAD ENGR.	CEW	9/2020	
	FIELD MGR.		8/20	
VERTICAL 1" = 5'	RECOMMENDED: DESIGN MANAGER	HAJ	9-20	CITY ENGINEER
FILE:	DRAWING:			DATE: 10/20/20
ATLAS PAGE NO: 218, 219, 281, 282				SHEET 85 OF 165 SHEETS

Saved 07-19-2020 8:37:31 PM by JASON.DICKMAN
Plot Scale 1:1 07-19-2020 8:46:14 PM by TAYLOR.WOODS
U:\Tulsa\2015\15K40\000\Mum\Drawings\15K40-C-WLPP03

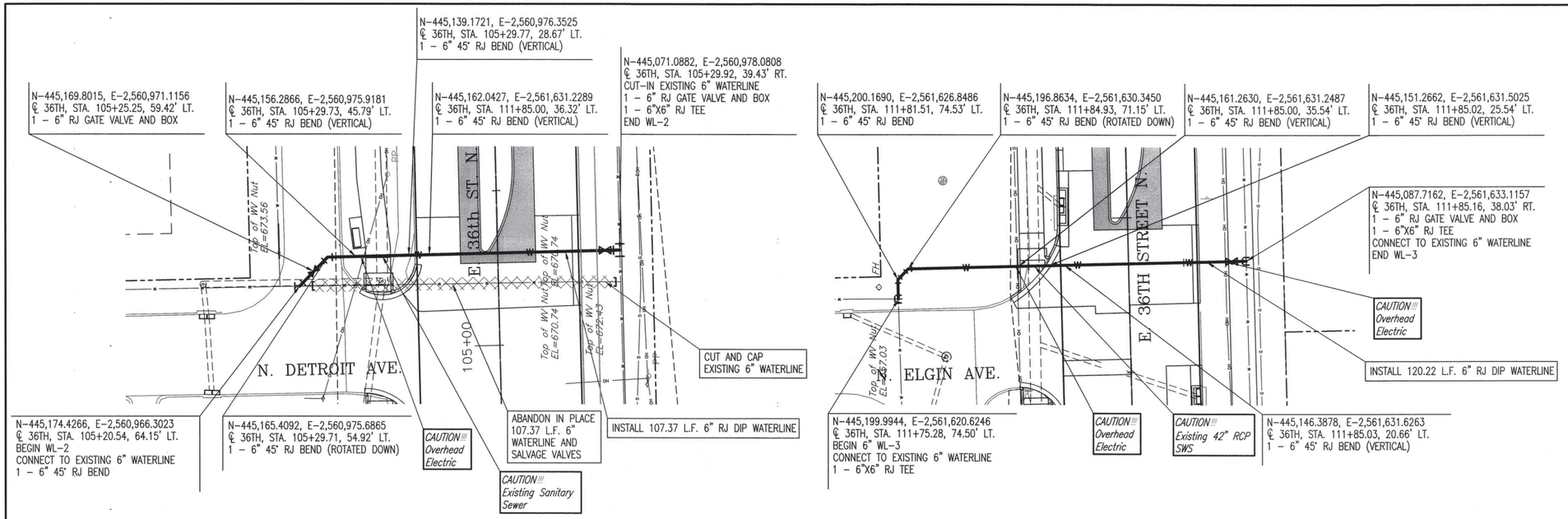

SCALE
1"=20'

LEGEND

– ABANDONED PIPE

* PRIOR TO BEGINNING CONNECTION, THE CONTRACTOR SHALL EXCAVATE THE EXISTING 6" WATERLINE AT STATION 0+00 WL-2, AND THE 6" WATERLINE AT STATION 0+00 WL-3, TO VERIFY PIPE SIZE, TYPE, FITTINGS, AND HORIZONTAL AND VERTICAL LOCATION. THE CONTRACTOR SHALL REPORT HIS FINDINGS TO THE ENGINEER SO THAT ANY NECESSARY PLAN MODIFICATIONS CAN BE MADE. ANY ADDITIONAL LABOR OR MATERIALS NECESSARY TO COMPLETE THE CONNECTION SHALL BE CONSIDERED SUBSIDIARY TO THE PROJECT.

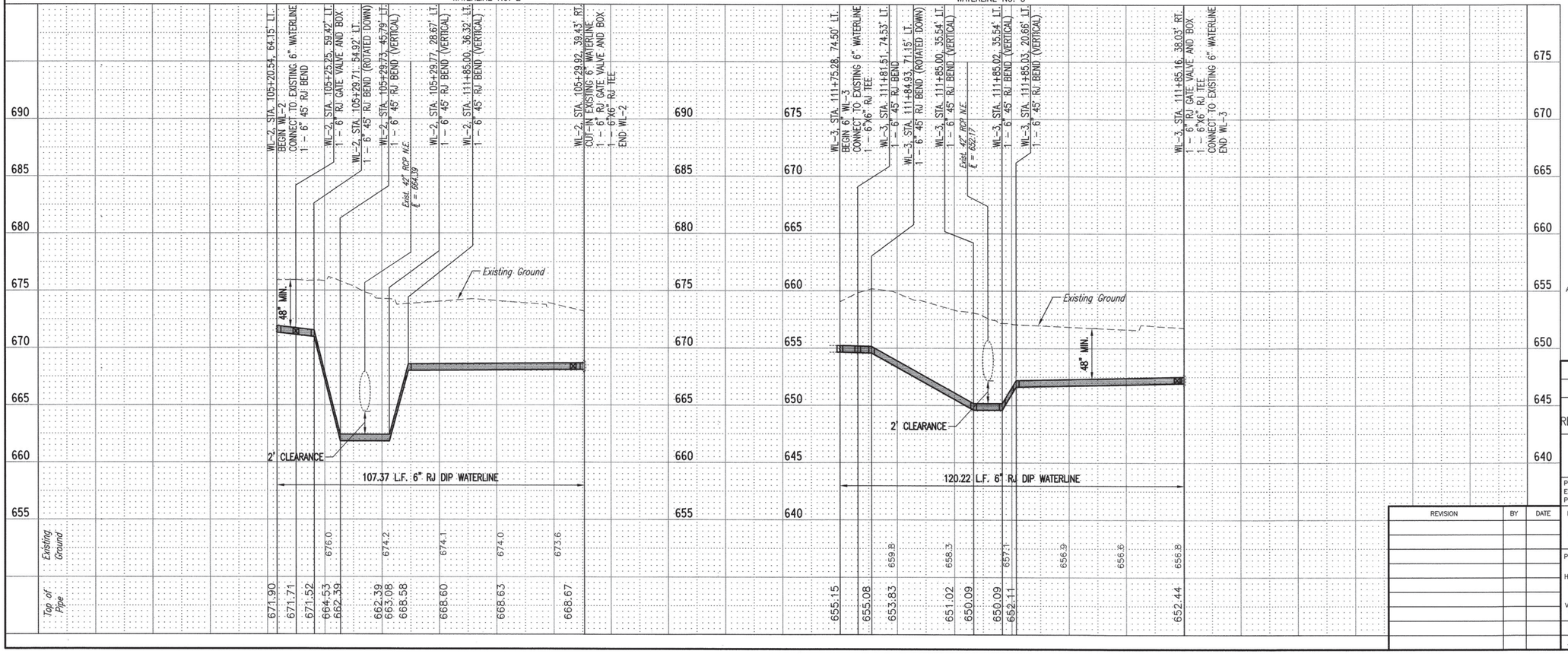

Saved 07-19-2020 8:38:47 PM by JASON.DICKMAN
Plot Scale 1:1 07-19-2020 8:46:51 PM by TAYLOR.WOODS
U:\Tulsa\2015\15K40\000\Main\Drawings\15K40-C-WLPP04

LICENSED PROFESSIONAL ENGINEER
JASON P. DICKMAN 27639
OKLAHOMA
07/19/2020

BEFORE YOU DIG 811 1-800-522-OKIE CALL OKIE

PLAN AND PROFILE WL-2 & WL-3

PROJECT NO. 144200 TMUA-W15-04

ARTERIAL STREET REHABILITATION AND WATERLINE REPLACEMENT – 36TH ST. N. – MLK BLVD. TO PEORIA AVE.

CITY OF TULSA, OKLAHOMA
ENGINEERING SERVICES DEPARTMENT

PLANS AND ESTIMATES PREPARED BY: PEC PROFESSIONAL ENGINEERING CONSULTANTS, P.A. 1924 S. UTICA AVE., SUITE 1400 TULSA, OK 74104 918-664-5400 www.pecT.com C.O.A. 1046 PE/LS EXPIRES: JUNE 30, 2021

REVISION	BY	DATE

PLAN SCALE: 1" = 20'	DRAWN	BFS	01/2020
	DESIGNED	JPD	01/2020
	SURVEY		
PROFILE SCALE:	PROJ. MGR.	JPH MLK	07/20 8/20
HORIZONTAL: 1" = 20'	LEAD ENGR.	CEW	8/2020
	FIELD MGR.	TAW	8/20
VERTICAL 1" = 5'	RECOMMENDED: DESIGN MANAGER	MLK	9-6

APPROVED: CITY ENGINEER

FILE: DRAWING: DATE: 10/20/20

ATLAS PAGE NO: 218, 219, 281, 282

SHEET 86 OF 165 SHEETS

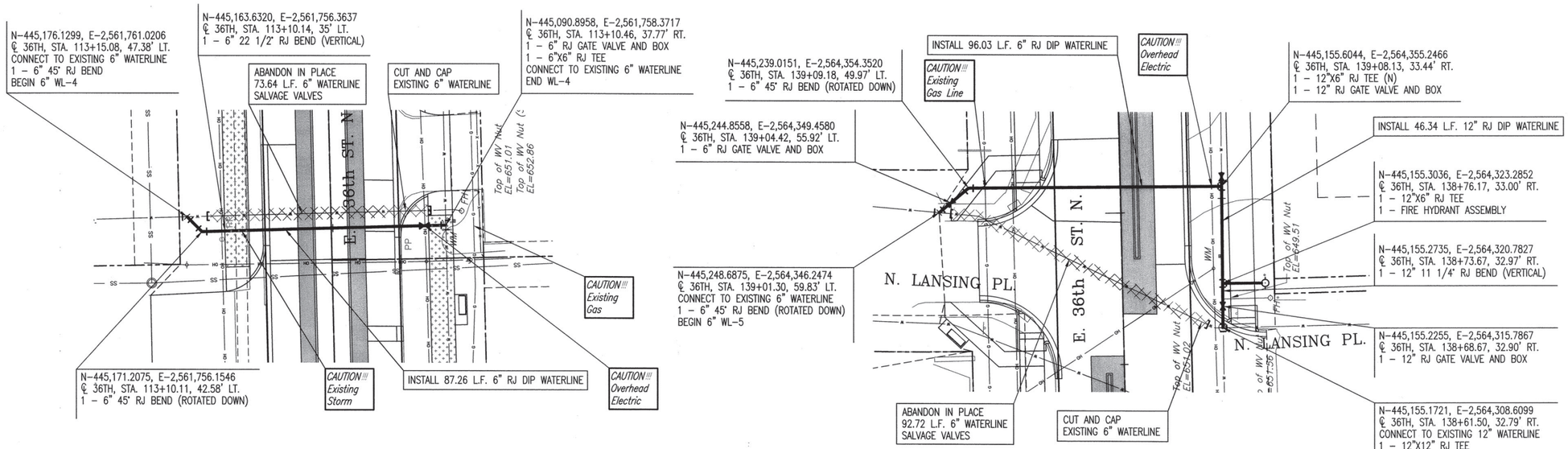

SCALE
1"=20'

LEGEND

– ABANDONED PIPE

* PRIOR TO BEGINNING CONNECTION, THE CONTRACTOR SHALL EXCAVATE THE EXISTING 6" WATERLINE AT STATION 0+00 WL–4, AND THE 6" WATERLINE AT STATION 0+00 WL–5, TO VERIFY PIPE SIZE, TYPE, FITTINGS, AND HORIZONTAL AND VERTICAL LOCATION. THE CONTRACTOR SHALL REPORT HIS FINDINGS TO THE ENGINEER SO THAT ANY NECESSARY PLAN MODIFICATIONS CAN BE MADE. ANY ADDITIONAL LABOR OR MATERIALS NECESSARY TO COMPLETE THE CONNECTION SHALL BE CONSIDERED SUBSIDIARY TO THE PROJECT.

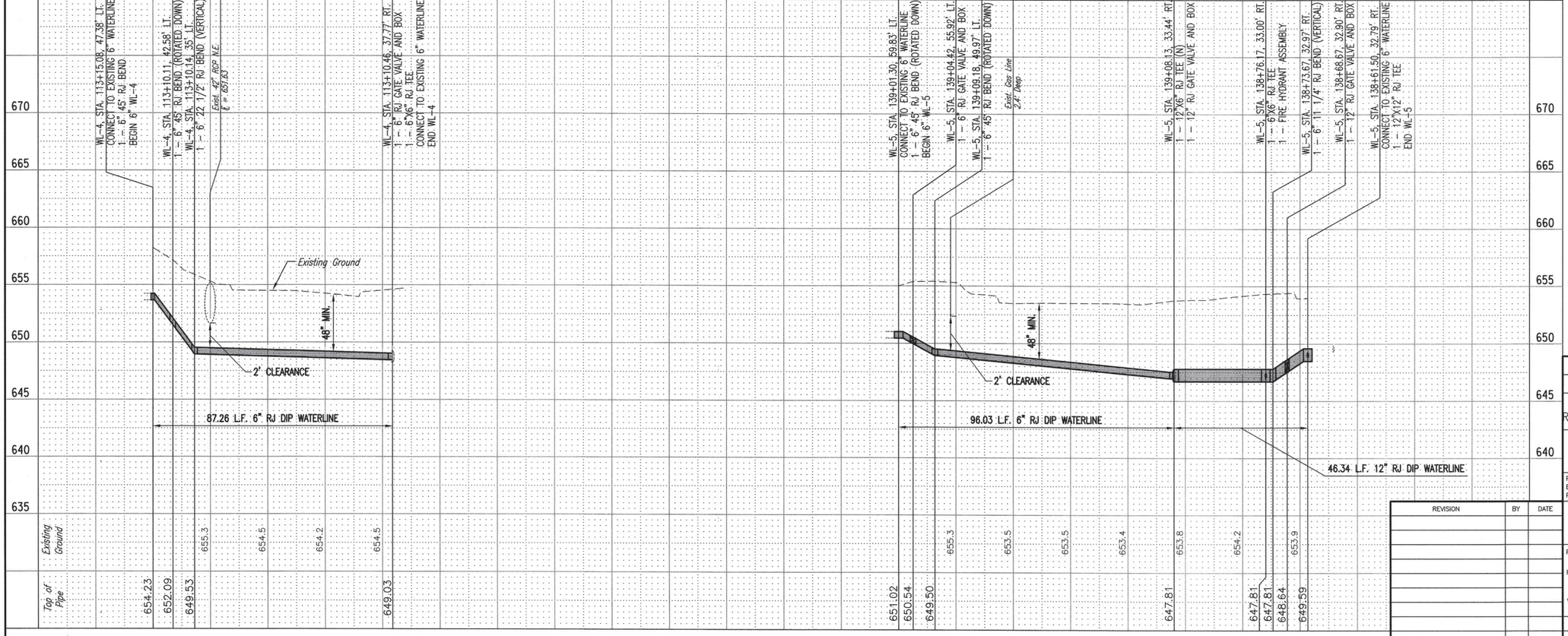

REVISION	BY	DATE

LICENSED PROFESSIONAL ENGINEER
JASON P. DICKMAN
27639
OKLAHOMA
07/19/2020

BEFORE YOU DIG
1-800-522-OKIE
CALL OKIE

PLAN AND PROFILE WL–4 & WL–5

PROJECT NO. 144200, TMUA-W15-04

ARTERIAL STREET REHABILITATION AND WATERLINE REPLACEMENT – 36TH ST. N. – MLK BLVD. TO PEORIA AVE.

CITY OF TULSA, OKLAHOMA
ENGINEERING SERVICES DEPARTMENT

PLANS AND ESTIMATES PREPARED BY: PEC
PROFESSIONAL ENGINEERING CONSULTANTS, P.A.
1924 S. UTICA AVE., SUITE 1400
TULSA, OK 74104 918-684-5400 www.pec1.com
C.O.A. 1046 PE/LS EXPIRES: JUNE 30, 2021

PLAN SCALE: 1" = 20'	DRAWN	BFS	01/2020	APPROVED:
	DESIGNED	JPD	01/2020	
	SURVEY			
PROFILE SCALE:	PROJ. MGR.	JPD	8/20	
HORIZONTAL: 1" = 20'	LEAD ENGR.	JPD	8/20	
	FIELD MGR.	ZCW	8/20	
VERTICAL 1" = 5'	RECOMMENDED: DESIGN MANAGER	HAS	9-20	CITY ENGINEER
FILE:	DRAWING:			DATE: 10/30/20
ATLAS PAGE NO: 218, 219, 281, 282				SHEET 87 OF 165 SHEETS

Saved 07-19-2020 8:39:53 PM by JASON.DICKMAN
Plotted on 11: 07-19-2020 8:47:41 PM by TAYLOR.WOODS
U:\Tulsa\2019\15K40\000\Main\Drawings\15K40-C-WLPP05

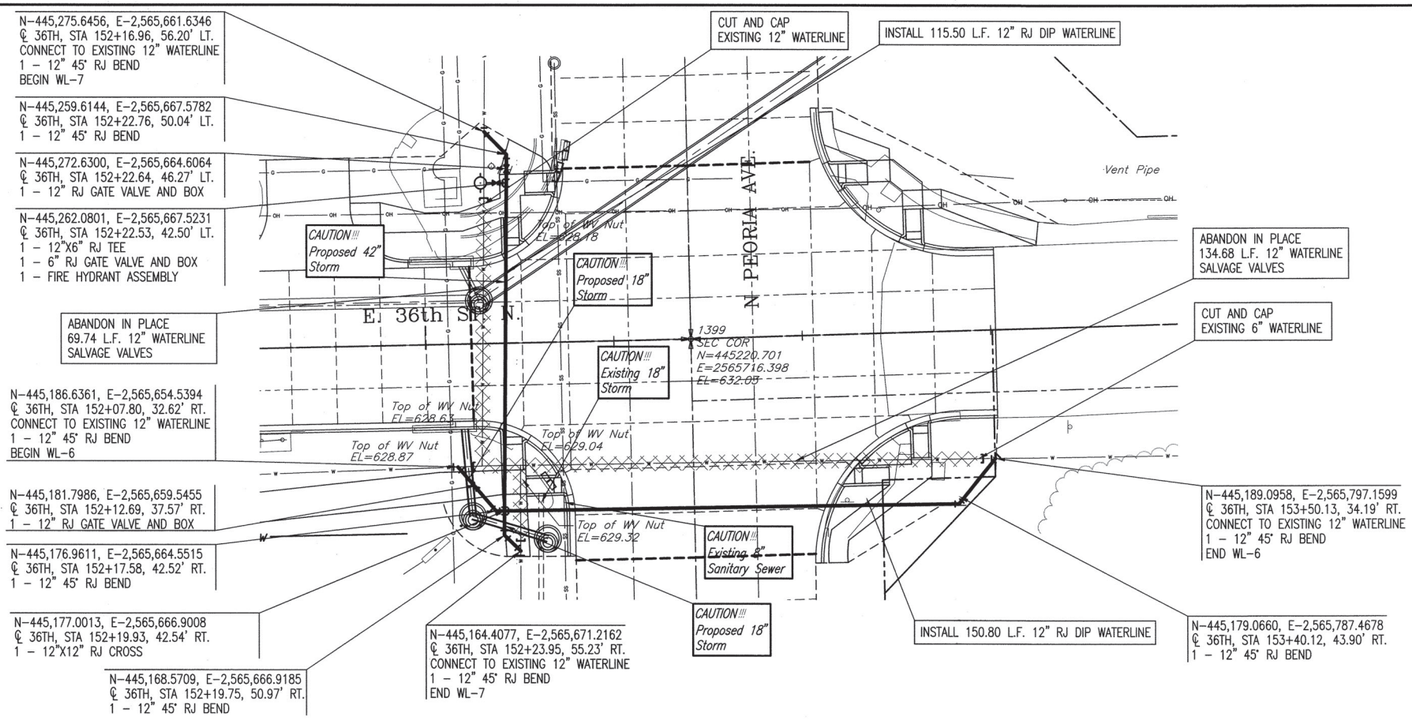

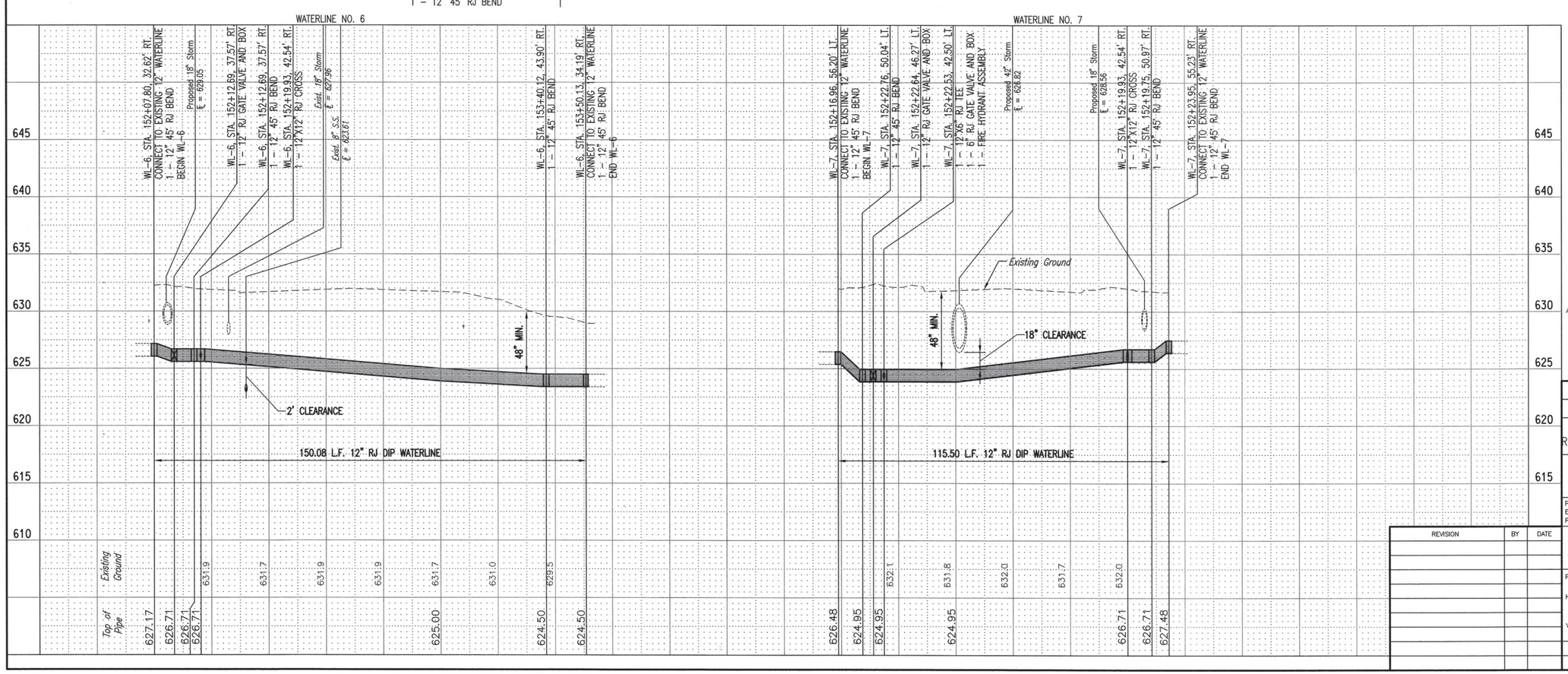

SCALE
1"=20'

LEGEND

– ABANDONED PIPE

* PRIOR TO BEGINNING CONNECTION, THE CONTRACTOR SHALL EXCAVATE THE EXISTING 12" WATERLINE AT STATION 0+00 WL-6, TO VERIFY PIPE SIZE, TYPE, FITTINGS, AND HORIZONTAL AND VERTICAL LOCATION. THE CONTRACTOR SHALL REPORT HIS FINDINGS TO THE ENGINEER SO THAT ANY NECESSARY PLAN MODIFICATIONS CAN BE MADE. ANY ADDITIONAL LABOR OR MATERIALS NECESSARY TO COMPLETE THE CONNECTION SHALL BE CONSIDERED SUBSIDIARY TO THE PROJECT.

LICENSED PROFESSIONAL ENGINEER
JASON P. DICKMAN
27639
OKLAHOMA
07/19/2020

BEFORE YOU DIG
1-800-522-OKIE
CALL OKIE

REVISION	BY	DATE

PLAN AND PROFILE WL-6 & 7

PROJECT NO. 144200, TMUA-W15-09

ARTERIAL STREET REHABILITATION AND WATERLINE REPLACEMENT – 36TH ST. N. – MLK BLVD. TO PEORIA AVE.

CITY OF TULSA, OKLAHOMA
ENGINEERING SERVICES DEPARTMENT

PLANS AND ESTIMATES PREPARED BY: PEC
PROFESSIONAL ENGINEERING CONSULTANTS, P.A.
1924 S. UTICA AVE., SUITE 1400
TULSA, OK 74104 918-664-5400 www.pecf.com
C.O.A. 1046 PE/LS EXPIRES: JUNE 30, 2021

PLAN SCALE: 1" = 20'	DRAWN	BFS	01/2020	APPROVED:
	DESIGNED	JPD	01/2020	
	SURVEY			
PROFILE SCALE:	PROJ. MGR.	MLK	07/20	
HORIZONTAL: 1" = 20'	LEAD ENGR.			
	FIELD MGR.			
VERTICAL 1" = 5'	RECOMMENDED: DESIGN MANAGER	HBJ	9-20	CITY ENGINEER
FILE:	DRAWING:			DATE: 09/30/20
ATLAS PAGE NO: 218, 219, 281, 282				SHEET 88 OF 165 SHEETS

Saved: 07-19-2020 8:42:45 PM by: JASON.DICKMAN
Plot Scale: 1:1 on 22x34 Plot Date/Time: 07-19-2020 8:48:57 PM by: TAYLOR.WOODS
U:\Tulsa\2015\15K40\000\Mxm\Drawings\15K40-C-WLPR06

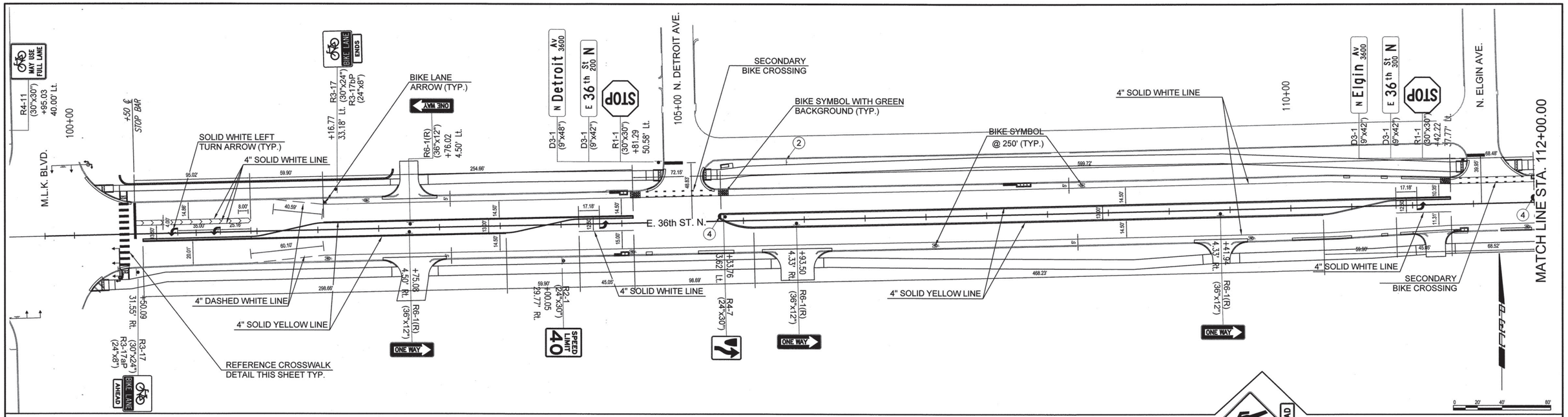

SOLID GREEN
SOLID WHITE BIKE SYMBOL
6'
3'-4"

GREEN BACKGROUND AT INTERSECTION CROSSINGS ONLY (MIN OF 5'-4" X 8')

BIKE SYMBOL DETAIL
NTS

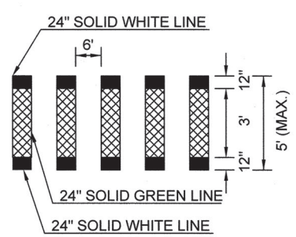

REFERENCE ODOT CROSSWALK STRIPING DETAIL PM1-1-03

PRIMARY BIKE CROSSING DETAIL
NTS

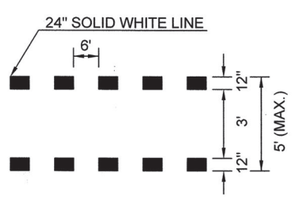

REFERENCE ODOT CROSSWALK STRIPING DETAIL PM1-1-03

SECONDARY BIKE CROSSING DETAIL
NTS

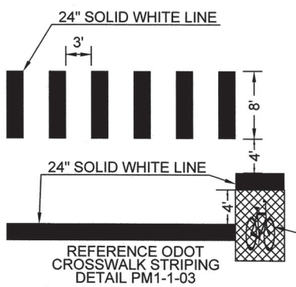

REFERENCE ODOT CROSSWALK STRIPING DETAIL PM1-1-03

BIKE SYMBOL WITH GREEN BACKROUND AT HARTFORD (TYP.)

CROSSWALK DETAIL
NTS

LEGEND:

1. REMOVE AND RESET EXIST. SIGN
2. EXISTING SIGN TO REMAIN
3. REMOVE EXISTING SIGN
4. YELLOW RETRO-REFLECTIVE PAINT AT ALL RAISED MEDIAN NOSES

NOTE: VEHICLE STOP BAR TO BE 4' FROM CROSSWALK WHEN BIKE LANE STOP BAR NOT PRESENT.

LICENSED PROFESSIONAL ENGINEER
JASON P. DICKMAN
27639
OKLAHOMA
08/17/2020

REVISION	BY	DATE

MARKING AND SIGNING 1

PROJECT NO. 144200

ARTERIAL STREET REHABILITATION AND WATERLINE REPLACEMENT – 36TH ST. N. – MLK BLVD TO PEORIA AVE.

CITY OF TULSA, OKLAHOMA
ENGINEERING SERVICES DEPARTMENT

PLANS AND ESTIMATES PREPARED BY: PEC PROFESSIONAL ENGINEERING CONSULTANTS, P.A. 1924 S. UTICA AVE., SUITE 1400 TULSA, OK 74104 918-664-5400 www.pec1.com

PLAN SCALE: 1" = 10'	DRAWN	BFS	01/2020	APPROVED:
	DESIGNED	JPD	01/2020	
	SURVEY			
PROFILE SCALE:	PROJ. MGR.			
HORIZONTAL: 1" =	LEAD ENGR.		08/20	
	FIELD MGR.		8/20	
VERTICAL 1" =	RECOMMENDED: DESIGN MANAGER		9-20	CITY ENGINEER
FILE:	DRAWING:			DATE: 10/30/20
ATLAS PAGE NO: 218, 219, 281, 282				SHEET 89 OF 165 SHEETS

DSWG: XXX PLOTTED BY: $USER$ SCALE: $SCALE$ $DATE$ $TIME$
$FILE$

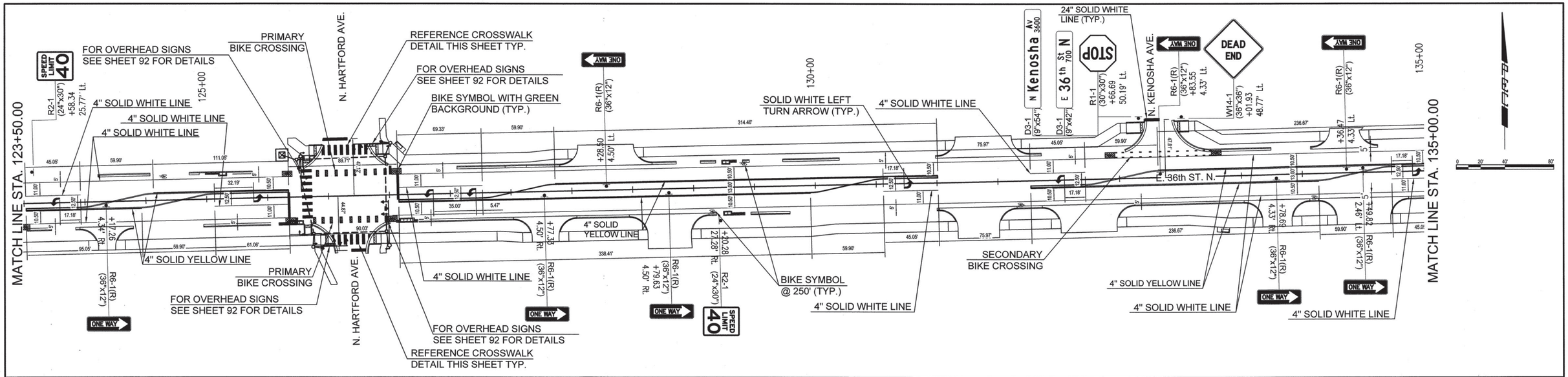

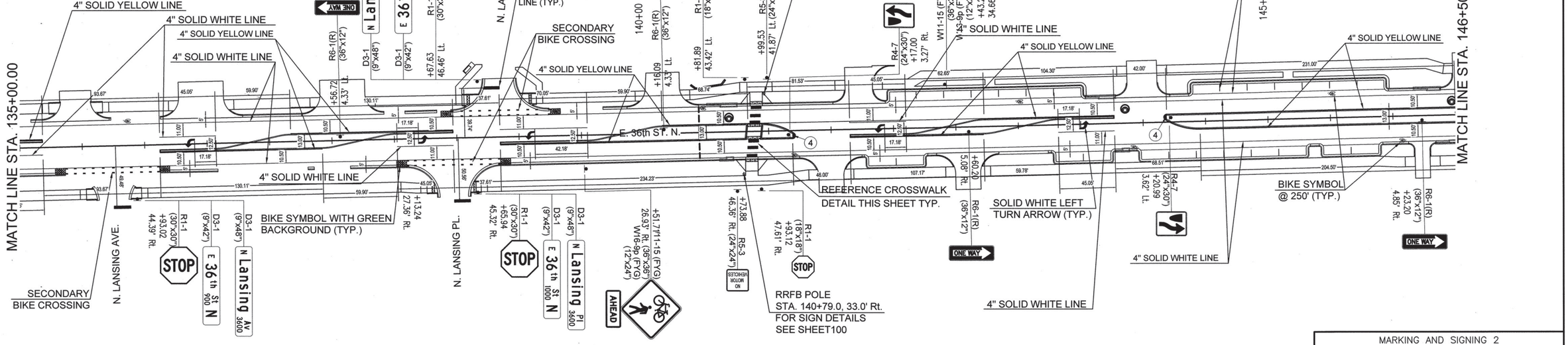

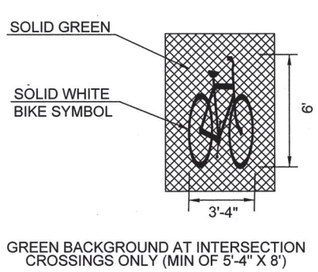

GREEN BACKGROUND AT INTERSECTION CROSSINGS ONLY (MIN OF 5'-4" X 8')

BIKE SYMBOL DETAIL
NTS

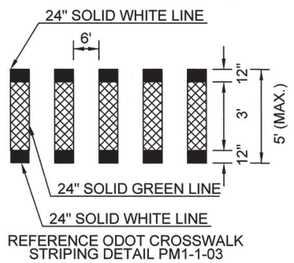

REFERENCE ODOT CROSSWALK STRIPING DETAIL PM1-1-03

PRIMARY BIKE CROSSING DETAIL
NTS

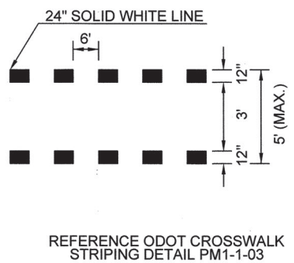

REFERENCE ODOT CROSSWALK STRIPING DETAIL PM1-1-03

SECONDARY BIKE CROSSING DETAIL
NTS

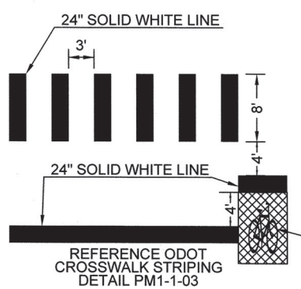

REFERENCE ODOT CROSSWALK STRIPING DETAIL PM1-1-03

BIKE SYMBOL WITH GREEN BACKROUND AT HARTFORD (TYP.)

CROSSWALK DETAIL
NTS

LEGEND:
1. REMOVE AND RESET EXIST. SIGN
2. EXISTING SIGN TO REMAIN
3. REMOVE EXISTING SIGN
4. YELLOW RETRO-REFLECTIVE PAINT AT ALL RAISED MEDIAN NOSES

NOTE: VEHICLE STOP BAR TO BE 4' FROM CROSSWALK WHEN BIKE LANE STOP BAR NOT PRESENT.

LICENSED PROFESSIONAL ENGINEER
JASON P. DICKMAN
27639
OKLAHOMA
08/17/2020

REVISION	BY	DATE

MARKING AND SIGNING 2

PROJECT NO. 144200

ARTERIAL STREET REHABILITATION AND WATERLINE REPLACEMENT – 36TH ST. N. – MLK BLVD TO PEORIA AVE.

CITY OF TULSA, OKLAHOMA
ENGINEERING SERVICES DEPARTMENT

PLANS AND ESTIMATES PREPARED BY: PEC — PROFESSIONAL ENGINEERING CONSULTANTS, P.A. 1924 S. UTICA AVE., SUITE 1400 TULSA, OK 74104 918-664-5400 www.pec1.com

PLAN SCALE: 1" = 10'	DRAWN	BFS	01/2020	APPROVED:
	DESIGNED	JPD	01/2020	
	SURVEY			
PROFILE SCALE:	PROJ. MGR.			
HORIZONTAL: 1" =	LEAD ENGR.		08/20	
	FIELD MGR.		8/20	
VERTICAL 1" =	RECOMMENDED: DESIGN MANAGER		9-20	CITY ENGINEER
FILE:	DRAWING:			DATE: 10/20/20
ATLAS PAGE NO: 218, 219, 281, 282				SHEET 90 OF 165 SHEETS

$TIME$ $DATE$ $SCALE$ SCALE: $USER$ PLOTTED BY: XXX DSNR: $FILE$

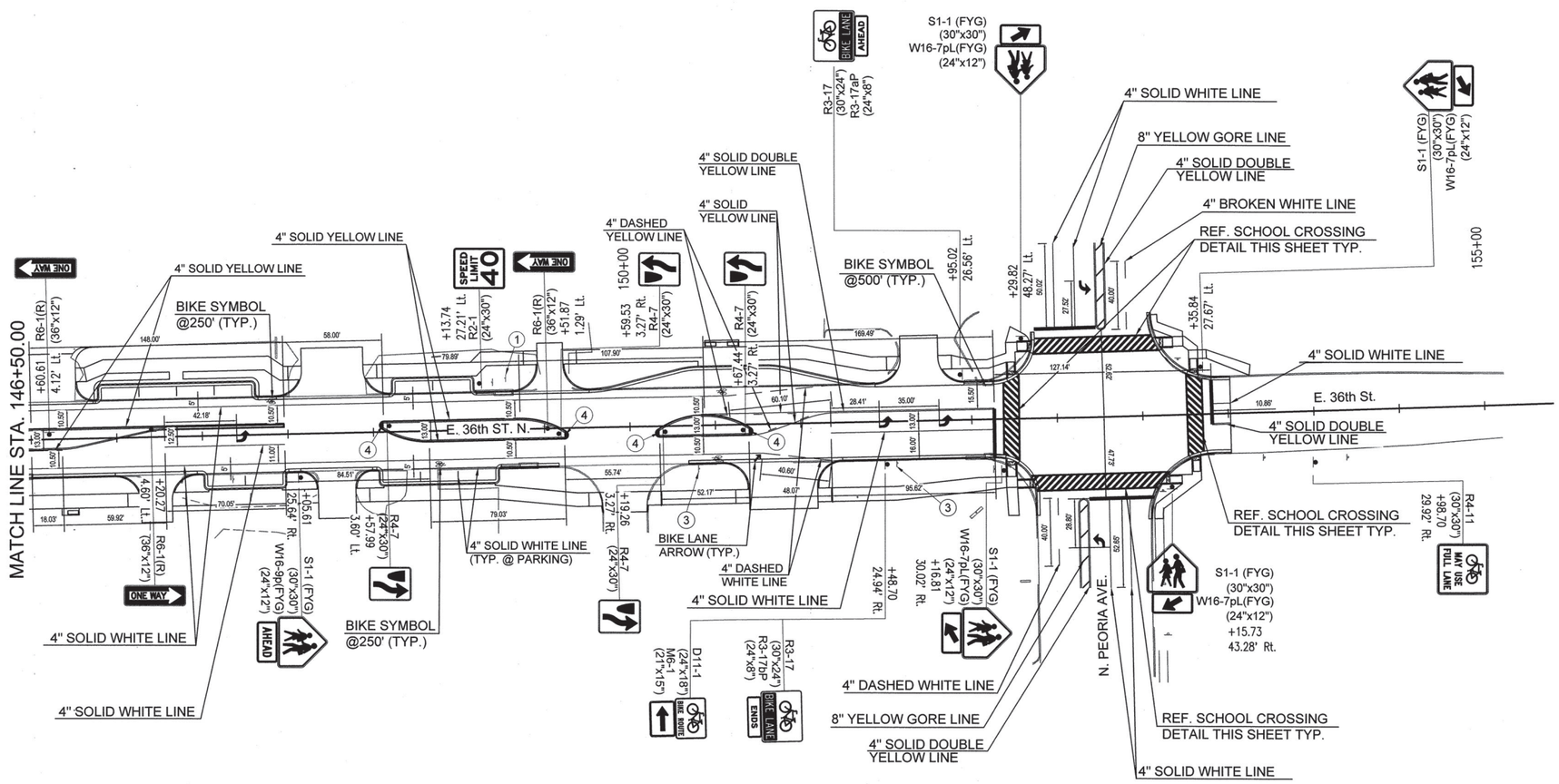

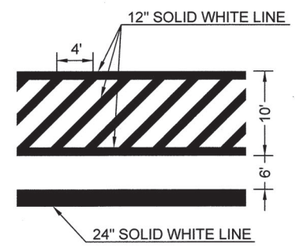

SCHOOL CROSSING DETAIL
NTS

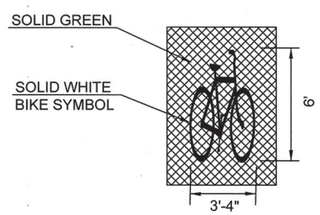

GREEN BACKGROUND AT INTERSECTION CROSSINGS ONLY (MIN OF 5'-4" X 8')

BIKE SYMBOL DETAIL
NTS

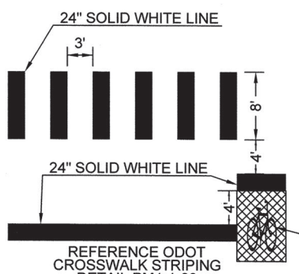

REFERENCE ODOT CROSSWALK STRIPING DETAIL PM1-1-03

CROSSWALK DETAIL
NTS

LEGEND:

1. REMOVE AND RESET EXIST. SIGN
2. EXISTING SIGN TO REMAIN
3. REMOVE EXISTING SIGN
4. YELLOW RETRO-REFLECTIVE PAINT AT ALL RAISED MEDIAN NOSES

NOTE: VEHICLE STOP BAR TO BE 4' FROM CROSSWALK WHEN BIKE LANE STOP BAR NOT PRESENT.

BIKE SYMBOL WITH GREEN BACKROUND AT HARTFORD (TYP.)

LICENSED PROFESSIONAL ENGINEER
JASON P. DICKMAN 27639
OKLAHOMA
08/17/2020

REVISION	BY	DATE

MARKING AND SIGNING 3

PROJECT NO. 144200

ARTERIAL STREET REHABILITATION AND WATERLINE REPLACEMENT – 36TH ST. N. – MLK BLVD TO PEORIA AVE.

CITY OF TULSA, OKLAHOMA
ENGINEERING SERVICES DEPARTMENT

PLANS AND ESTIMATES PREPARED BY: PEC PROFESSIONAL ENGINEERING CONSULTANTS, P.A. 1924 S. UTICA AVE., SUITE 1400 TULSA, OK 74104 918-664-5400 www.pec1.com

PLAN SCALE: 1" = 10'	DRAWN	BFS	01/2020
	DESIGNED	JPD	01/2020
	SURVEY		
PROFILE SCALE:	PROJ. MGR.		
HORIZONTAL: 1" =	LEAD ENGR.	JPD	08/20
	FIELD MGR.	BFS	8/20
VERTICAL 1" =	RECOMMENDED: DESIGN MANAGER	HRS	9.20

APPROVED: CITY ENGINEER

FILE: DRAWING: DATE: 10/30/20

ATLAS PAGE NO: 218, 219, 281, 282 SHEET 91 OF 165 SHEETS

DSNR: XXX PLOTTED BY: $USER$ SCALE: $SCALE$ $DATE$ $TIME$
$FILE$

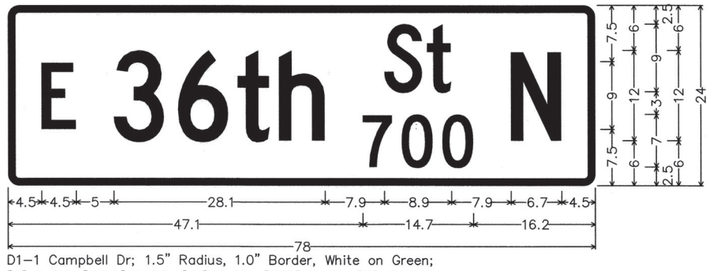

D1–1 Campbell Dr; 1.5" Radius, 1.0" Border, White on Green;
[E] C 2K; [36th] C 2K; [St] C 2K; [700] C 2K; [N] C 2K;
Table of distances between letter and object lefts.

	E	3	6	t	h	S	t	N	
4.5	9.5	8.6	7.9	5.5	14.0	5.7	11.1	6.7	4.5

	7	0	0		
47.1	5.2	5.4	4.1	16.2	

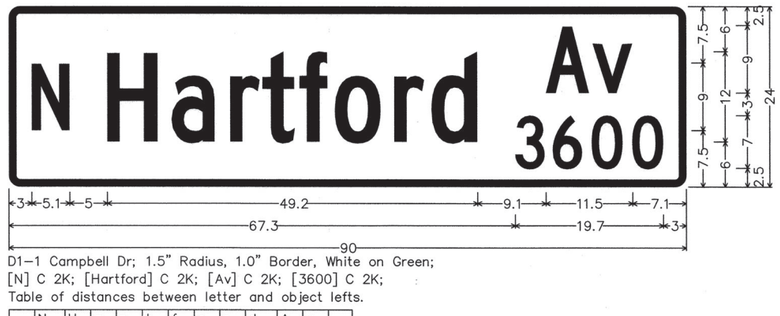

D1–1 Campbell Dr; 1.5" Radius, 1.0" Border, White on Green;
[N] C 2K; [Hartford] C 2K; [Av] C 2K; [3600] C 2K;
Table of distances between letter and object lefts.

	N	H	a	r	t	f	o	r	d	A	v	
3.0	10.1	8.5	7.8	4.3	4.9	4.7	7.9	5.0	15.2	6.2	5.3	7.1

	3	6	0	0	
67.3	5.0	5.1	5.4	4.2	3.0

SUMMARY OF MAST ARM MOUNTED SIGNS						
MESSAGE	POLE LOCATION	NO. OF SIGN	A	HEIGHT	SQ.FT. SIGN AREA	TOTAL AREA SQ. FT.
E 36TH ST N	C,G	2	78"	24"	13.00	26.00
N HARTFORD AV	A,E	2	90"	24"	15.00	30.00
R10–12	A,C,E,G	4	30"	36"	7.50	30.00
					TOTAL	86.00

PRIMARY DIRECTION = 9" FONT 'C' (WHITE)
NUMBER / NAME = 12" FONT 'C' (WHITE)
NUMBER SUFFIX = 7" FONT 'C' (WHITE)
STREET TYPE = 9" FONT 'C' (WHITE)
BLOCK NUMBER = 7" FONT 'C' (WHITE)

SHEETING = DIAMOND GRADE VIP (GREEN)
OVERLAY = ELECTRONIC CUTTABLE OVERLAY FILE

LICENSED PROFESSIONAL ENGINEER
JASON P. DICKMAN 27639
OKLAHOMA
07/19/2020

REVISION	BY	DATE

SIGNING DETAILS 1

PROJECT NO. 144200

ARTERIAL STREET REHABILITATION AND WATERLINE REPLACEMENT – 36TH ST. N. – MLK BLVD TO PEORIA AVE.

CITY OF TULSA, OKLAHOMA
ENGINEERING SERVICES DEPARTMENT

PLANS AND ESTIMATES PREPARED BY: PEC
PROFESSIONAL ENGINEERING CONSULTANTS, P.A.
1924 S. UTICA AVE., SUITE 1400
TULSA, OK 74104 918-664-5400 www.pect.com

PLAN SCALE: 1" =	DRAWN	BFS	01/2020	APPROVED:
	DESIGNED	JPD	01/2020	
	SURVEY			
PROFILE SCALE:	PROJ. MGR.			
	LEAD ENGR.			
HORIZONTAL: 1" =	FIELD MGR.			
VERTICAL 1" =	RECOMMENDED: DESIGN MANAGER			CITY ENGINEER
	FILE:	DRAWING:		DATE: 10/30/20
	ATLAS PAGE NO: 218, 219, 281, 282			SHEET 92 OF 165 SHEETS

DSNR: XXX PLOTTED BY: $FILE$ $USER$ SCALE: $SCALE$ $DATE$ $TIME$

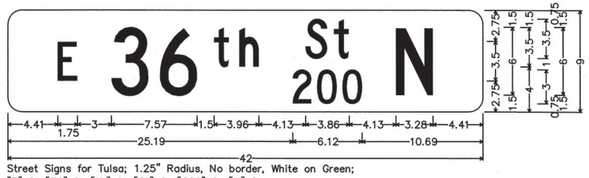

Street Signs for Tulsa; 1.25" Radius, No border, White on Green;
[E] C; [36] C; [th] C; [St] C; [200] C; [N] C;
Table of distances between letter and object lefts.

	E	3	6	t	h	S	t	N	
4.41	4.75	4.29	4.78	2.24	5.85	2.52	5.47	3.28	4.41

	2	0	0		
25.19	2.15	2.24	1.73	10.69	

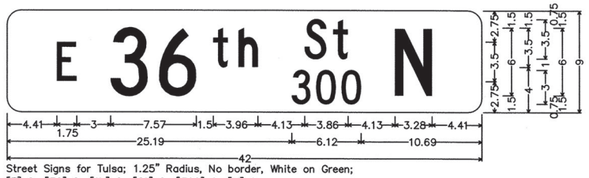

Street Signs for Tulsa; 1.25" Radius, No border, White on Green;
[E] C; [36] C; [th] C; [St] C; [300] C; [N] C;
Table of distances between letter and object lefts.

	E	3	6	t	h	S	t	N	
4.41	4.75	4.29	4.78	2.24	5.85	2.52	5.47	3.28	4.41

	3	0	0		
25.19	2.15	2.24	1.73	10.69	

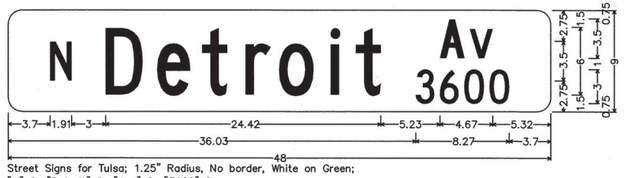

Street Signs for Tulsa; 1.25" Radius, No border, White on Green;
[N] C; [Detroit] C; [Ave] C; [3600] C;
Table of distances between letter and object lefts.

	N	D	e	t	r	o	i	t	A	v	
3.70	4.91	4.56	3.97	3.85	2.95	4.57	2.23	7.44	2.64	2.03	5.32

	3	6	0	0		
36.03	2.15	2.14	2.25	1.73	3.70	

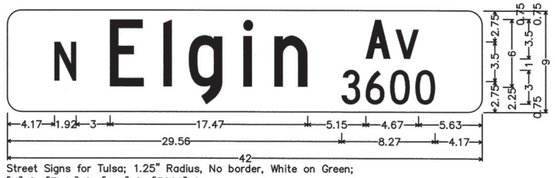

Street Signs for Tulsa; 1.25" Radius, No border, White on Green;
[N] C; [Elgin] C; [Ave] C; [3600] C;
Table of distances between letter and object lefts.

	N	E	l	g	i	n	A	v	
4.17	4.92	4.61	2.36	4.83	2.73	8.09	2.65	2.03	5.63

	3	6	0	0		
29.56	2.15	2.14	2.24	1.74	4.17	



Street Signs for Tulsa; 1.25" Radius, No border, White on Green;
[N] C; [Kenosha] C; [Ave] C; [3600] C;
Table of distances between letter and object lefts.

	N	K	e	n	o	s	h	a	A	v	
4.37	4.91	4.28	4.49	4.45	4.02	4.45	4.45	8.09	2.64	2.03	5.82

	3	6	0	0		
41.36	2.15	2.15	2.24	1.73	4.37	

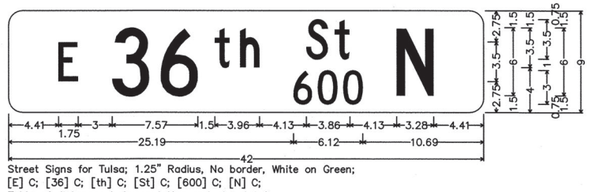

Street Signs for Tulsa; 1.25" Radius, No border, White on Green;
[E] C; [36] C; [th] C; [St] C; [600] C; [N] C;
Table of distances between letter and object lefts.

	E	3	6	t	h	S	t	N	
4.41	4.75	4.29	4.78	2.24	5.85	2.52	5.47	3.28	4.41

	6	0	0		
25.19	2.15	2.24	1.73	10.69	

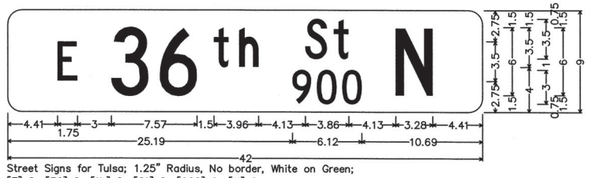

Street Signs for Tulsa; 1.25" Radius, No border, White on Green;
[E] C; [36] C; [th] C; [St] C; [900] C; [N] C;
Table of distances between letter and object lefts.

	E	3	6	t	h	S	t	N	
4.41	4.75	4.29	4.78	2.24	5.85	2.52	5.47	3.28	4.41

	9	0	0		
25.19	2.15	2.24	1.73	10.69	

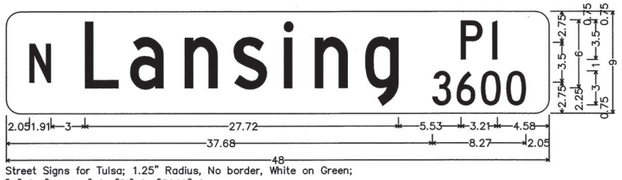

Street Signs for Tulsa; 1.25" Radius, No border, White on Green;
[N] C; [Lansing] C; [Pl] C; [3600] C;
Table of distances between letter and object lefts.

	N	L	a	n	s	i	n	g	P	l	
2.05	4.91	4.00	4.83	4.32	4.45	2.73	4.45	8.47	2.72	0.49	4.58

	3	6	0	0		
37.68	2.15	2.15	2.24	1.73	2.05	

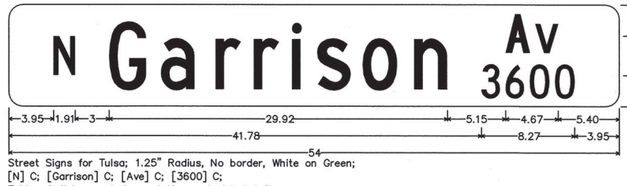

Street Signs for Tulsa; 1.25" Radius, No border, White on Green;
[N] C; [Garrison] C; [Ave] C; [3600] C;
Table of distances between letter and object lefts.

	N	G	a	r	r	i	s	o	n	A	v	
3.95	4.91	4.59	4.83	3.38	3.38	2.22	4.01	4.57	8.09	2.64	2.03	5.40

	3	6	0	0		
41.78	2.15	2.15	2.24	1.73	3.95	

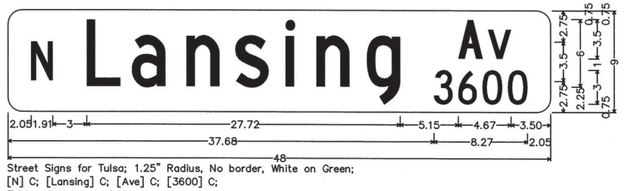

Street Signs for Tulsa; 1.25" Radius, No border, White on Green;
[N] C; [Lansing] C; [Ave] C; [3600] C;
Table of distances between letter and object lefts.

	N	L	a	n	s	i	n	g	A	v	
2.05	4.91	4.00	4.83	4.32	4.45	2.73	4.45	8.09	2.64	2.03	3.50

	3	6	0	0		
37.68	2.15	2.15	2.24	1.73	2.05	

BEFORE YOU DIG 811 1-800-522-OKIE CALL OKIE

LICENSED PROFESSIONAL ENGINEER
JASON P. DICKMAN 27639
OKLAHOMA
08/13/2020

SIGNING DETAILS 2

PROJECT NO. 144200

ARTERIAL STREET REHABILITATION AND WATERLINE REPLACEMENT – 36TH ST. N. – MLK BLVD TO PEORIA AVE.

CITY OF TULSA, OKLAHOMA
ENGINEERING SERVICES DEPARTMENT

PLANS AND ESTIMATES PREPARED BY: PEC PROFESSIONAL ENGINEERING CONSULTANTS, P.A. 1924 S. UTICA AVE., SUITE 1400 TULSA, OK 74104 918-664-5400 www.pec1.com

REVISION	BY	DATE

PLAN SCALE: 1" =

PROFILE SCALE: HORIZONTAL: 1" = VERTICAL 1" =

DRAWN	BFS	01/2020
DESIGNED	JPD	01/2020
SURVEY		
PROJ. MGR.		
LEAD ENGR.		
FIELD MGR.		
RECOMMENDED: DESIGN MANAGER		

APPROVED: CITY ENGINEER

FILE: DRAWING: DATE:

ATLAS PAGE NO: 218, 219, 281, 282 SHEET 93 OF 165 SHEETS

$TIME$ $DATE$ $SCALE$ $SCALE: $USER$ PLOTTED BY: DSNR: XXX $FILE$

Push Button Note:
The pole enlargement detail is provided for informational purposes only. The signal heads shall be installed on the poles such that the signal heads are visible from the crosswalk. The push buttons shall be installed such that the push buttons are unobstructed and adjacent to the level, all-weather surface, allowing access from a wheelchair. The push buttons are to be mounted on the side of the pole closest to the corresponding crosswalk. Push buttons shall be located within 10 inches of the level, all-weather surface, and no more than 10 feet from face of curb at ramp.

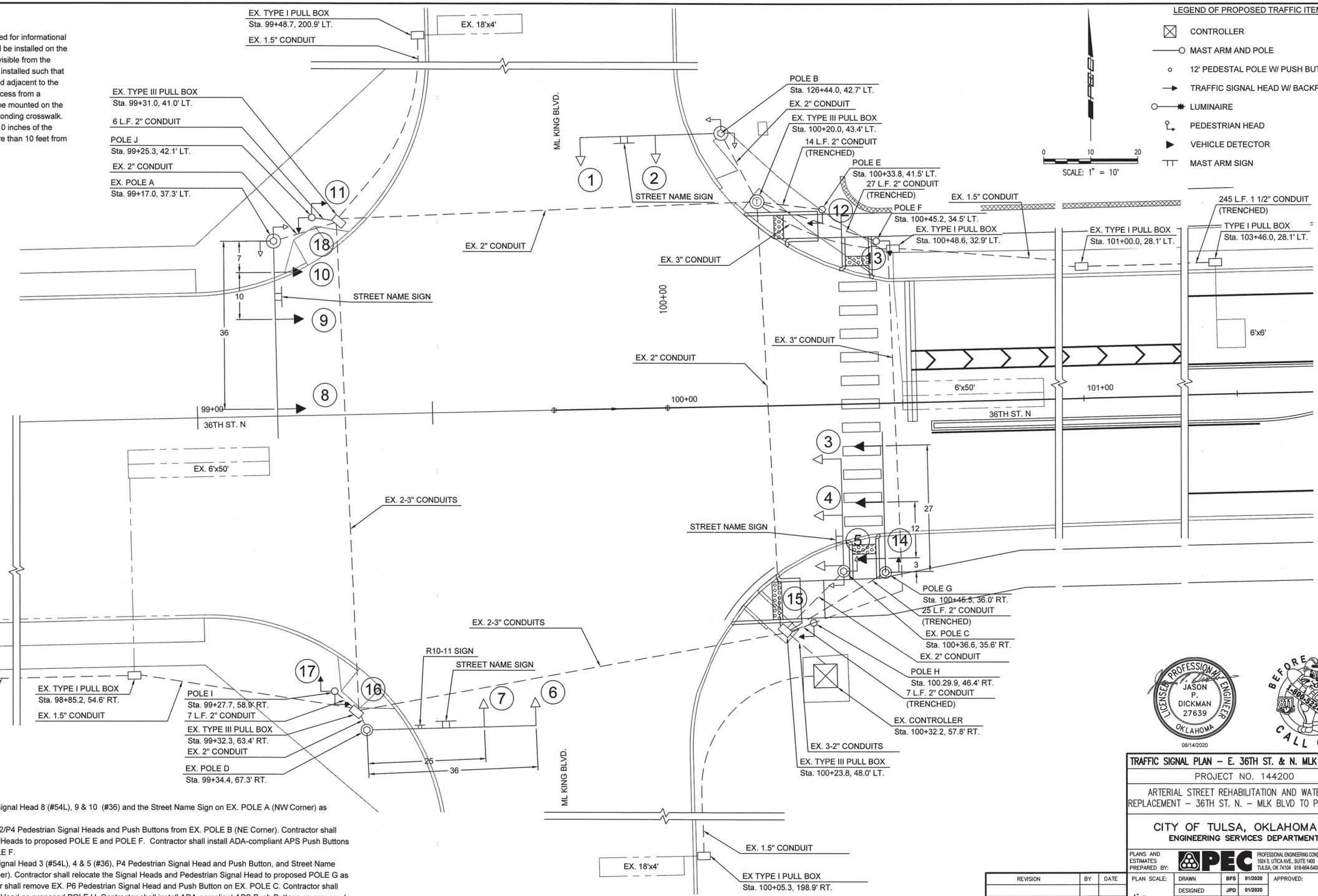

LEGEND OF PROPOSED TRAFFIC ITEMS

- CONTROLLER
- MAST ARM AND POLE
- 12' PEDESTAL POLE W/ PUSH BUTTON(S)
- TRAFFIC SIGNAL HEAD W/ BACKPLATE
- LUMINAIRE
- PEDESTRIAN HEAD
- VEHICLE DETECTOR
- MAST ARM SIGN

CONSTRUCTION NOTES

1. Contractor shall relocate EX. Signal Head 8 (#54L), 9 & 10 (#36) and the Street Name Sign on EX. POLE A (NW Corner) as shown on the plans.
2. Contractor shall remove EX. P2/P4 Pedestrian Signal Heads and Push Buttons from EX. POLE B (NE Corner). Contractor shall relocate the Pedestrian Signal Heads to proposed POLE E and POLE F. Contractor shall install ADA-compliant APS Push Buttons on proposed POLE E and POLE F.
3. Contractor shall remove EX. Signal Head 3 (#54L), 4 & 5 (#36), P4 Pedestrian Signal Head and Push Button, and Street Name Sign on EX. POLE C (SE Corner). Contractor shall relocate the Signal Heads and Pedestrian Signal Head to proposed POLE G as shown on the plans. Contractor shall remove EX. P6 Pedestrian Signal Head and Push Button on EX. POLE C. Contractor shall relocate the Pedestrian Signal Head on proposed POLE H. Contractor shall install ADA-compliant APS Push Buttons on proposed POLE G and POLE H. Contractor shall remove EX. POLE C and Footing.
4. Contractor shall remove EX. P6/P8 Pedestrian Signal Heads and Push Buttons from EX. POLE D (SW Corner). Contractor shall relocate the Pedestrian Signal Heads to proposed POLE I . Contractor shall install ADA-compliant APS Push Buttons with Speech Messaging on proposed POLE I.
5. Contractor shall remove EX. P2/P8 Pedestrian Signal Heads and Push Buttons from EX. POLE A (NW Corner). Contractor shall relocate the Pedestrian Signal Heads to proposed POLE J . Contractor shall install ADA-compliant APS Push Buttons with Speech Messaging on proposed POLE J.

PROFESSIONAL ENGINEER — JASON P. DICKMAN 27639 — OKLAHOMA — 08/14/2020

BEFORE YOU DIG 811 1-800-522-OKIE CALL OKIE

REVISION	BY	DATE

TRAFFIC SIGNAL PLAN – E. 36TH ST. & N. MLK JR. BLVD.

PROJECT NO. 144200

ARTERIAL STREET REHABILITATION AND WATERLINE REPLACEMENT – 36TH ST. N. – MLK BLVD TO PEORIA AVE.

CITY OF TULSA, OKLAHOMA
ENGINEERING SERVICES DEPARTMENT

PLANS AND ESTIMATES PREPARED BY: PEC — PROFESSIONAL ENGINEERING CONSULTANTS, P.A. 1924 S. UTICA AVE., SUITE 1400 TULSA, OK 74104 918-664-5400 www.pec1.com

PLAN SCALE: 1" =	DRAWN	BFS	01/2020
	DESIGNED	JPD	01/2020
	SURVEY		
PROFILE SCALE:	PROJ. MGR.		
HORIZONTAL: 1" =	LEAD ENGR.	MAB	08/20
	FIELD MGR.	BOM	8/20
VERTICAL 1" =	RECOMMENDED: DESIGN MANAGER	MAB	9/20

APPROVED: CITY ENGINEER

FILE: DRAWING: DATE: 10/30/20

ATLAS PAGE NO: 218, 219, 281, 282 SHEET 93A OF 165 SHEETS

$TIME$ $DATE$ $SCALE$ $USER$ SCALE: DSWG: XXX PLOTTED BY: $FILE$

PHASING DIAGRAM

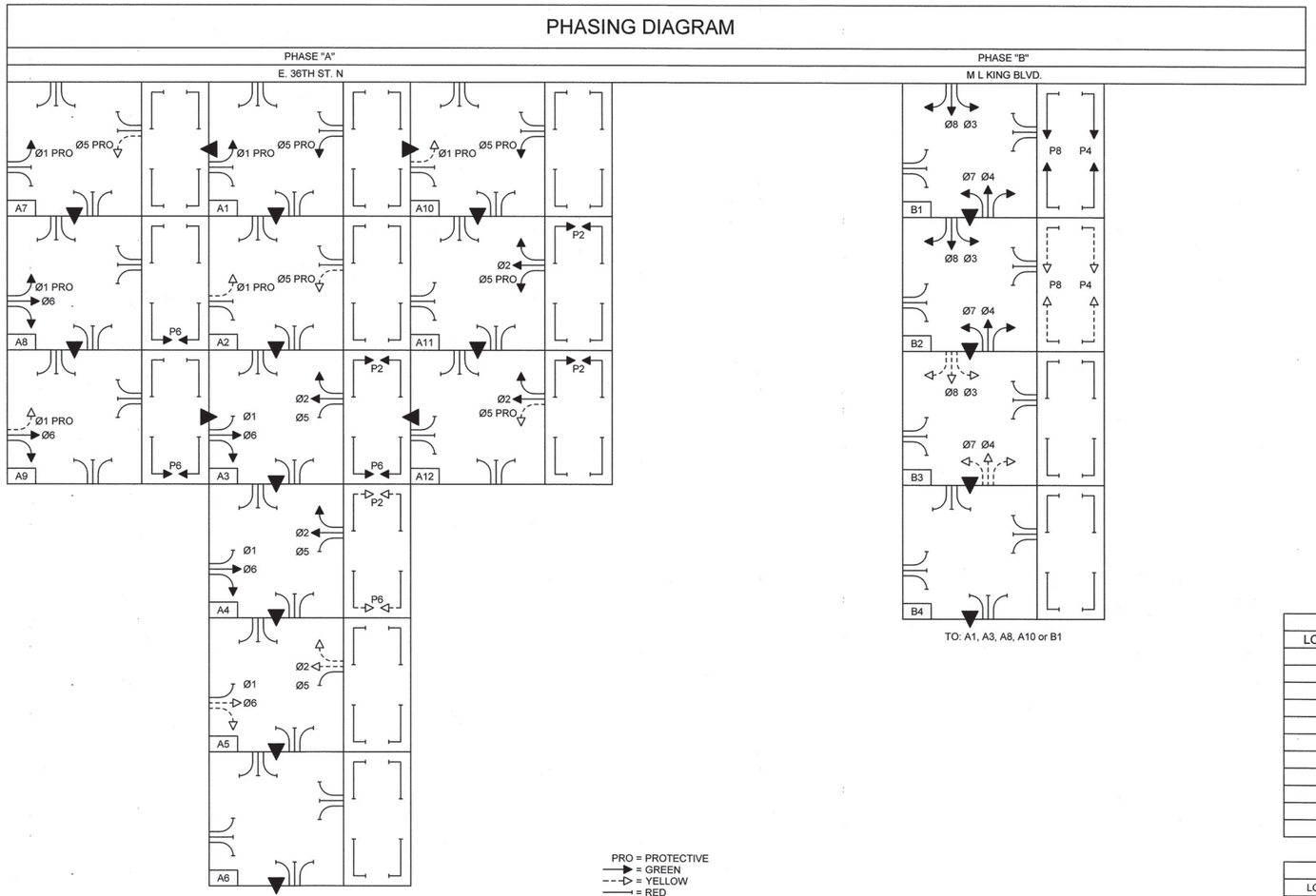

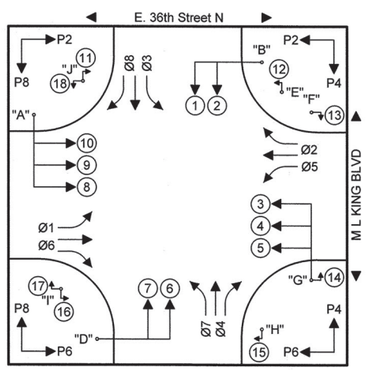

BLOCK NUMBER	DIRECTION	SIGNAL HEAD NO.									
		1/2	3	4/5	6/7	8	9/10	11/12	13/14	15/16	17/18
A1	Ø1 & Ø5 ROW, OVL A & B	R	~~G~~	R	R	~~G~~	R	DW	DW	DW	DW
A2	Ø1 & Ø5 CL, OVL A & B CL	R	~~Y~~	R	R	~~Y~~	R	DW	DW	DW	DW
A3	Ø2, Ø6, P2 & P6 ROW	R	~~R~~	G	R	~~R~~	G	W	DW	W	DW
A4	Ø2 & Ø6 ROW, P2 & P6 CL	R	~~R~~	G	R	~~R~~	G	FDW	DW	FDW	DW
A5	Ø2 & Ø6 CL	R	~~R~~	Y	R	~~R~~	Y	DW	DW	DW	DW
A6	ALL RED	R	~~R~~	R	R	~~R~~	R	DW	DW	DW	DW
A7	Ø1 ROW, Ø5 CL, OVL A & B CL	R	~~G~~	R	R	~~Y~~	R	DW	DW	DW	DW
A8	Ø1, Ø6 & P6 ROW, OVL A	R	~~G~~	G	R	~~R~~	R	DW	DW	W	DW
A9	Ø6 & P6 ROW, Ø1 CL, OVL A CL	R	~~Y~~	G	R	~~R~~	R	DW	DW	W	DW
A10	Ø5 ROW, Ø1 CL, OVL A CL, OVL B	R	~~Y~~	R	R	~~G~~	R	DW	DW	DW	DW
A11	Ø2, Ø5 & P2 ROW, OVL B	R	~~R~~	R	R	~~G~~	G	W	DW	DW	DW
A12	Ø2 & P2 ROW, Ø5 CL, OVL B CL	R	~~R~~	R	R	~~Y~~	G	W	DW	DW	DW
--	Ø3 & Ø7 ROW, OVL C & D	--	--	--	--	--	--	--	--	--	--
--	Ø3 & Ø7 CL, OVL C & D CL	--	--	--	--	--	--	--	--	--	--
B1	Ø4, Ø8, P4 & P8 ROW	G	~~R~~	R	G	~~R~~	R	DW	W	DW	W
B2	Ø4, Ø8 ROW, P4 & P8 CL	G	~~R~~	R	G	~~R~~	R	DW	FDW	DW	FDW
B3	Ø4 & Ø8 CL	Y	~~R~~	R	Y	~~R~~	R	DW	DW	DW	DW
B4	ALL RED	R	~~R~~	R	R	~~R~~	R	DW	DW	DW	DW
--	Ø3 ROW, Ø7 CL, OVL C & D CL	--	--	--	--	--	--	--	--	--	--
--	Ø3, Ø8 & P8 ROW, OVL D	--	--	--	--	--	--	--	--	--	--
--	Ø8 & P8 ROW, Ø3 CL, OVL D CL	--	--	--	--	--	--	--	--	--	--
--	Ø7 ROW, Ø3 CL, OVL C, OVL D CL	--	--	--	--	--	--	--	--	--	--
--	Ø4, Ø7 & P4 ROW, OVL C	--	--	--	--	--	--	--	--	--	--
--	Ø4 & P4 ROW, Ø7 CL, OVL C CL	--	--	--	--	--	--	--	--	--	--
	FLASHING RED	FR	FR	FR	FR	FR	FR	DW	DW	DW	DW

TABLE #1 SIGNAL HEADS

SIGNAL HEAD NUMBER	PROP./EX.	NUMBER AND TYPE	MOUNTING	VISOR	BACKPLATE
1, 2, 4, 5, 6, 7, 9, 10	EXISTING	8-ONEWAY(#36)	MAST ARM	V-1	B-2
3, 8	EXISTING	2-ONEWAY(#54L)	MAST ARM	V-1	B-2
11, 12, 13, 14, 15, 16, 17, 18	EXISTING	8-ONEWAY(#33)	CLAMP	---	---

TABLE #2 MAST ARMS & POLES

LOCATION	PROP./EX.	TYPE	MOUNTING HT.	MAST ARM LEN.	FOUNDATION	LUM MT. HT.	LUM ARM LEN.
A	EXISTING	STD. POLE	20'	42'	---	---	---
B	EXISTING	STD. POLE	20'	30'	---	---	---
C	EXISTING	STD. POLE	20'	24'	---	---	---
D	EXISTING	STD. POLE	20'	36'	---	---	---
E	PROPOSED	PEDESTAL POLE	10'	N/A	F-1	---	---
F	PROPOSED	PEDESTAL POLE	10'	N/A	F-1	---	---
G	PROPOSED	STD. POLE	20'	30'	S-30/36	---	---
H	PROPOSED	PEDESTAL POLE	10'	N/A	F-1	---	---
I	PROPOSED	PEDESTAL POLE	10'	N/A	F-1	---	---
J	PROPOSED	PEDESTAL POLE	10'	N/A	F-1	---	---

TABLE #3 ELECTRICAL CABLE

LOCATION	EXISTING ELECTRICAL CABLE (USE IN PLACE)	NEW ELECTRICAL CABLE
A	20C#14 / 7C#14 / (2) #6 THHN GREEN / #12 THHN GREEN	N/A
B	20C#14 / 7C#14 / (2) #6 THHN GREEN / #12 THHN GREEN	7C#14 / (2) 4C#14 / #6 THHN GREEN
C	20C#14 / 7C#14 / #6 THHN GREEN / #12 THHN GREEN	N/A
D	20C#14 / 7C#14 / #6 THHN GREEN / #12 THHN GREEN	N/A
E	N/A	(2) 7C #14 / 4C#14 / (2) #6 THHN GREEN / #12 THHN GREEN
F	N/A	7C #14 / 4C#14 / (2) #6 THHN GREEN / #12 THHN GREEN
G	N/A	20C#14 / 7C#14 / 4C #14 / #6 THHN GREEN / #12 THHN GREEN
H	N/A	7C#14 / 4C#14 / #6 THHN GREEN / #12 THHN GREEN
I	N/A	7C#14 / (2) 4C#14 / #6 THHN GREEN / #12 THHN GREEN
J	N/A	7C#14 / (2) 4C#14 / #6 THHN GREEN / #12 THHN GREEN

LICENSED PROFESSIONAL ENGINEER
JASON P. DICKMAN
27639
OKLAHOMA
08/14/2020

REVISION	BY	DATE

PHASING DIAGRAM – E. 36TH ST. & N. MLK JR. BLVD.

PROJECT NO. 144200

ARTERIAL STREET REHABILITATION AND WATERLINE REPLACEMENT – 36TH ST. N. – MLK BLVD TO PEORIA AVE.

CITY OF TULSA, OKLAHOMA
ENGINEERING SERVICES DEPARTMENT

PLANS AND ESTIMATES PREPARED BY: PEC PROFESSIONAL ENGINEERING CONSULTANTS, P.A. 1924 S. UTICA AVE., SUITE 1400 TULSA, OK 74104 918-664-5400 www.pec1.com

PLAN SCALE: 1" =	DRAWN	BFS	01/2020	APPROVED:
	DESIGNED	JPD	01/2020	
	SURVEY			
PROFILE SCALE:	PROJ. MGR.			
HORIZONTAL: 1" =	LEAD ENGR.	JPD	08/20	
	FIELD MGR.	BFS	8/20	
VERTICAL 1" =	RECOMMENDED: DESIGN MANAGER	HDS	9-20	CITY ENGINEER
FILE:	DRAWING:			DATE: 10/20/20
ATLAS PAGE NO: 218, 219, 281, 282				SHEET 93B OF 165 SHEETS

$TIME$ $DATE$ $SCALE$ $USER$ SCALE: PLOTTED BY: DSHR: XXX $FILE$

E. 36TH ST. & ML KING BLVD.

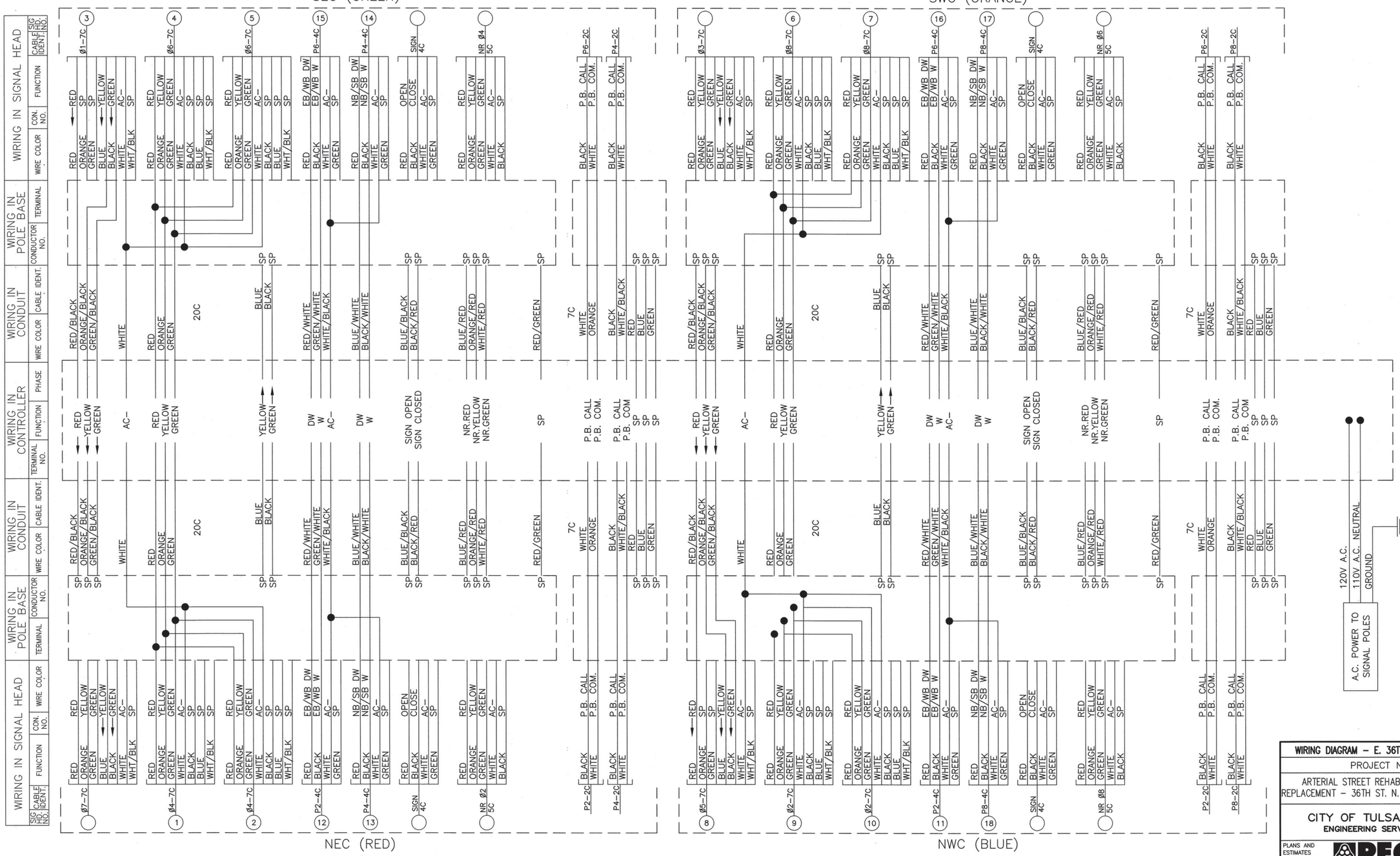

NOTE:
IF JUMPERS OR OTHER CONNECTIONS ARE MADE IN THE FIELD DURING INSTALLATION, AND ARE ACCEPTED BY THE ENGINEER, THIS SHOULD BE SHOWN ON THE WIRING DIAGRAM FOR FUTURE REFERENCE.

REVISION	BY	DATE

PROFESSIONAL ENGINEER
JASON P. DICKMAN 27639
OKLAHOMA
08/14/2020

WIRING DIAGRAM – E. 36TH ST. & N. MLK JR. BLVD.

PROJECT NO. 144200

ARTERIAL STREET REHABILITATION AND WATERLINE REPLACEMENT – 36TH ST. N. – MLK BLVD TO PEORIA AVE.

CITY OF TULSA, OKLAHOMA
ENGINEERING SERVICES DEPARTMENT

PLANS AND ESTIMATES PREPARED BY: PEC — PROFESSIONAL ENGINEERING CONSULTANTS, P.A. 1924 S. UTICA AVE., SUITE 1400 TULSA, OK 74104 918-664-5400 www.pec1.com

PLAN SCALE: 1" =	DRAWN	BFS	01/2020	APPROVED:
	DESIGNED	JPD	01/2020	
	SURVEY			
PROFILE SCALE:	PROJ. MGR.			
HORIZONTAL: 1" =	LEAD ENGR.		08/20	
	FIELD MGR.		8/20	
VERTICAL 1" =	RECOMMENDED: DESIGN MANAGER			CITY ENGINEER
FILE:	DRAWING:		DATE: 10/30/20	
ATLAS PAGE NO: 218, 219, 281, 282			SHEET 93C OF 165 SHEETS	

DGN: XXX PLOTTED BY: $USER# SCALE: $SCALE# $DATE# $TIME#

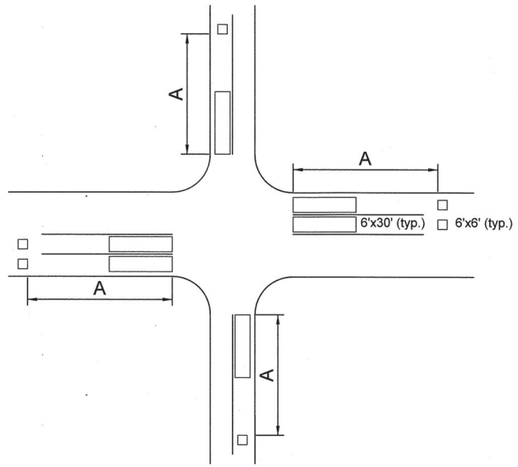

VIRTUAL LOOP DESIGN
FOR INFRARED DETECTION
(TYPICAL LAYOUT)

DETECTOR PLACEMENT "A"	
30 mph	220'
35 mph	256'
40 mph	293'
45 mph	330'

VIRTUAL LOOP DESIGN
FOR VIDEO DETECTION

1 (NB) & 2 (SB)	
OUTPUT 1	SB
OUTPUT 2	SBLT
OUTPUT 3	NB
OUTPUT 4	NBLT

3 (EB) & 4 (WB)	
OUTPUT 1	WB
OUTPUT 2	WBLT
OUTPUT 3	EB
OUTPUT 4	EBLT

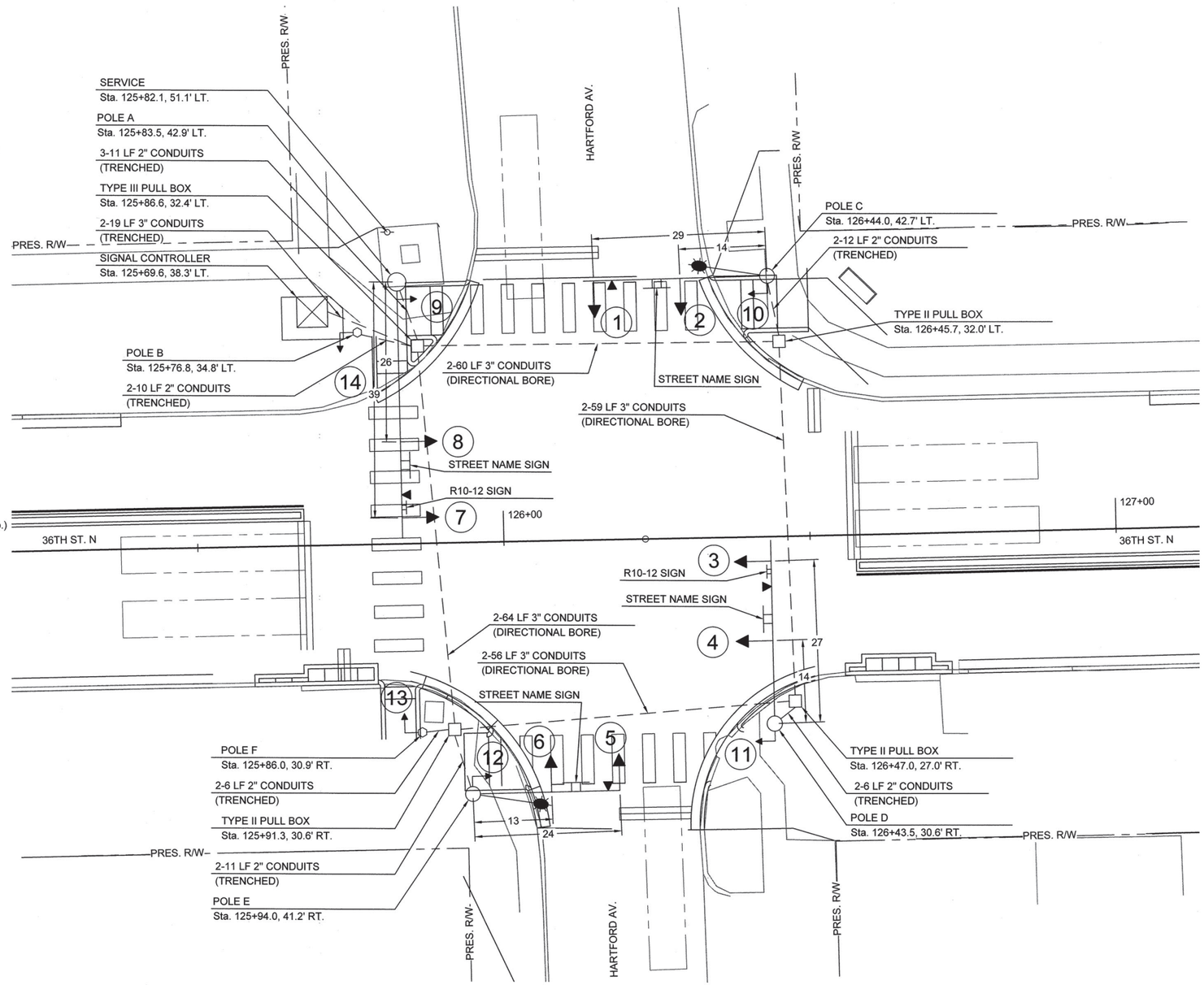

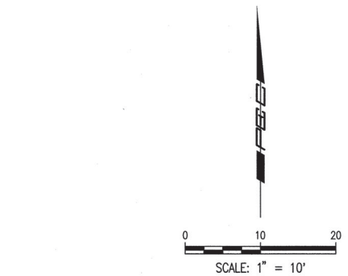

LEGEND OF PROPOSED TRAFFIC ITEMS

- CONTROLLER
- MAST ARM AND POLE
- 12' PEDESTAL POLE W/ PUSH BUTTON(S)
- TRAFFIC SIGNAL HEAD W/ BACKPLATE
- LUMINAIRE
- PEDESTRIAN HEAD
- VEHICLE DETECTOR
- MAST ARM SIGN

Video Detection Note:
Video detection will be provided for this intersection. The detector loops shown are only to depict the areas of detection along with the phases that each video detector unit will call.

Push Button Note:
The pole enlargement detail is provided for informational purposes only. The signal heads shall be installed on the poles such that the signal heads are visible from the crosswalk. The push buttons shall be installed such that the push buttons are unobstructed and adjacent to the level, all-weather surface, allowing access from a wheelchair. The push buttons are to be mounted on the side of the pole closest to the corresponding crosswalk. Push buttons shall be located within 10 inches of the level, all-weather surface, and no more than 10 feet from face of curb at ramp.

BEFORE YOU DIG 811 1-800-522-OKIE CALL OKIE

LICENSED PROFESSIONAL ENGINEER
JASON P. DICKMAN
27639
OKLAHOMA
08/13/2020

REVISION	BY	DATE

TRAFFIC SIGNAL PLAN – E. 36TH ST. & N. HARTFORD AVE.

PROJECT NO. 144200

ARTERIAL STREET REHABILITATION AND WATERLINE REPLACEMENT – 36TH ST. N. – MLK BLVD TO PEORIA AVE.

CITY OF TULSA, OKLAHOMA
ENGINEERING SERVICES DEPARTMENT

PLANS AND ESTIMATES PREPARED BY: PEC — PROFESSIONAL ENGINEERING CONSULTANTS, P.A. 1924 S. UTICA AVE., SUITE 1400 TULSA, OK 74104 918-664-5400 www.pec1.com

PLAN SCALE: 1" =	DRAWN	BFS	01/2020
	DESIGNED	JPD	01/2020
	SURVEY		
PROFILE SCALE:	PROJ. MGR.		
HORIZONTAL: 1" =	LEAD ENGR.		
	FIELD MGR.		
VERTICAL 1" =	RECOMMENDED: DESIGN MANAGER		

APPROVED: CITY ENGINEER

FILE: DRAWING: DATE: 10/30/20

ATLAS PAGE NO: 218, 219, 281, 282 SHEET 94 OF 165 SHEETS

DGN: XXX PLOTTED BY: #USER# SCALE: #SCALE# DATE: #DATE# TIME: #TIME# FILE: #FILE#

PHASING DIAGRAM

PHASE "A" — E. 36TH ST. N

PHASE "B" — N. HARTFORD AV.

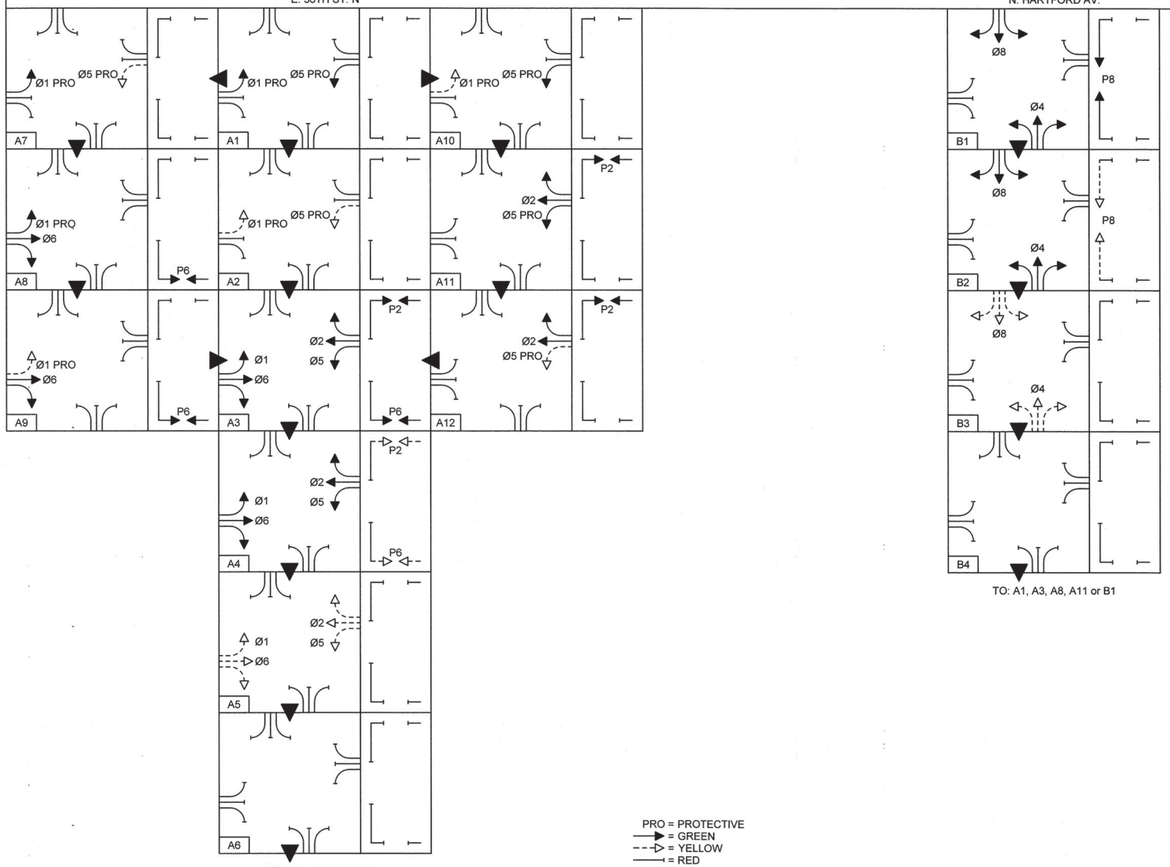

PRO = PROTECTIVE
= GREEN
= YELLOW
= RED

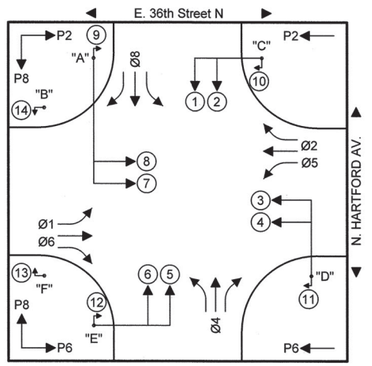

BLOCK NUMBER	DIRECTION	SIGNAL HEAD NO. 1	2	3	4	5	6	7	8	9/10	11/12	13/14	
A1	Ø1 & Ø5 ROW, OVL A & B	R	R	~~G~~	R	R	R	~~G~~	R	DW	DW	DW	
A2	Ø1 & Ø5 CL, OVL A & B CL	R	R	~~Y~~	R	R	R	~~Y~~	R	DW	DW	DW	
A3	Ø2, Ø6, P2 & P6 ROW	R	R	G	G	R	R	G	G	W	W	DW	
A4	Ø2 & Ø6 ROW, P2 & P6 CL	R	R	G	G	R	R	G	G	FDW	FDW	DW	
A5	Ø2 & Ø6 CL	R	R	Y	Y	R	R	Y	Y	DW	DW	DW	
A6	ALL RED	R	R	R	R	R	R	R	R	DW	DW	DW	
A7	Ø1 ROW, Ø5 CL, OVL A & B CL	R	R	~~G~~	R	R	R	~~Y~~	R	DW	DW	DW	
A8	Ø1, Ø6 & P6 ROW, OVL A	R	R	~~G~~	G	R	R	R	R	DW	W	DW	
A9	Ø6 & P6 ROW, Ø1 CL, OVL A CL	R	R	~~Y~~	G	R	R	R	R	DW	W	DW	
A10	Ø5 ROW, Ø1 CL, OVL A CL, OVL B	R	R	~~Y~~	R	R	R	~~G~~	R	DW	DW	DW	
A11	Ø2, Ø5 & P2 ROW, OVL B	R	R	R	R	R	R	~~G~~	G	W	DW	DW	
A12	Ø2 & P2 ROW, Ø5 CL, OVL B CL	R	R	R	R	R	R	~~Y~~	G	W	DW	DW	
--	Ø3 & Ø7 ROW, OVL C & D	--	--	--	--	--	--	--	--	--	--	--	
--	Ø3 & Ø7 CL, OVL C & D CL	--	--	--	--	--	--	--	--	--	--	--	
B1	Ø4, Ø8, P4 & P8 ROW	G	G	R	R	G	G	R	R	DW	DW	W	
B2	Ø4, Ø8 ROW, P4 & P8 CL	G	G	R	R	G	G	R	R	DW	DW	FDW	
B3	Ø4 & Ø8 CL	Y	Y	R	R	Y	Y	R	R	DW	DW	DW	
B4	ALL RED	R	R	R	R	R	R	R	R	DW	DW	DW	
--	Ø3 ROW, Ø7 CL, OVL C & D CL	--	--	--	--	--	--	--	--	--	--	--	
--	Ø3, Ø8 & P8 ROW, OVL D	--	--	--	--	--	--	--	--	--	--	--	
--	Ø8 & P8 ROW, Ø3 CL, OVL D CL	--	--	--	--	--	--	--	--	--	--	--	
--	Ø7 ROW, Ø3 CL, OVL C, OVL D CL	--	--	--	--	--	--	--	--	--	--	--	
--	Ø4, Ø7 & P4 ROW, OVL C	--	--	--	--	--	--	--	--	--	--	--	
--	Ø4 & P4 ROW, Ø7 CL, OVL C CL	--	--	--	--	--	--	--	--	--	--	--	
	FLASHING RED	FR	FR	FR	FR	FR	FR	FR	FR				

TABLE #1 SIGNAL HEADS					
SIGNAL HEAD NUMBER	PROP./EX.	NUMBER AND TYPE	MOUNTING	VISOR	BACKPLATE
1, 2, 4, 5, 6, 8	PROPOSED	6-ONEWAY(#36)	MAST ARM	V-1	B-2
3, 7	PROPOSED	2-ONEWAY(#64L)	MAST ARM	V-1	B-2
9, 10, 11, 12, 13, 14	PROPOSED	4-ONEWAY(#33)	CLAMP	---	---

TABLE #2 MAST ARMS & POLES							
LOCATION	PROP./EX.	TYPE	MOUNTING HT.	MAST ARM LEN.	FOUNDATION	LUM MT. HT.	LUM ARM LEN.
A *	PROPOSED	STD. POLE (3G)	20'	42'	S-42/50	---	---
B	PROPOSED	PEDESTAL POLE	10'	N/A	F-1	---	---
C	PROPOSED	STD. POLE (2BE)	20'	30'	S-30/36	30'	10'
D *	PROPOSED	STD. POLE (2B)	20'	30'	S-30/36	---	---
E	PROPOSED	STD. POLE (1RE)	20'	24'	S-18/24	30'	10'
F	PROPOSED	PEDESTAL POLE	10'	N/A	F-1	---	---

* = MAST ARM LENGTH ALLOWS FOR FUTURE LEFT TURN SIGNAL

TABLE #3 ELECTRICAL CABLE	
LOCATION	ELECTRICAL CABLE
A	20C#14 / 7C#14 / 4C#14 / 2C#14 / VIDEO / OPTICOM / #6 THHN GREEN / #12 THHN GREEN
B	4C#14 / 2C#14 / #6 THHN GREEN / #12 THHN GREEN
C	20C#14 / 7C#14 / 2C#12 UF / VIDEO / OPTICOM / #6 THHN GREEN / #12 THHN GREEN
D	20C#14 / 7C#14 / VIDEO / OPTICOM / #6 THHN GREEN / #12 THHN GREEN
E	20C#14 / 7C#14 / 4C#14 / 2C#14 / 2C#12 UF / VIDEO / #6 THHN GREEN / #12 THHN GREEN
F	4C#14 / 2C#14 / #6 THHN GREEN / #12 THHN GREEN

LICENSED PROFESSIONAL ENGINEER
JASON P. DICKMAN 27639
OKLAHOMA

08/13/2020

REVISION	BY	DATE

PHASING DIAGRAM – E. 36TH ST. & N. HARTFORD AVE.

PROJECT NO. 144200

ARTERIAL STREET REHABILITATION AND WATERLINE REPLACEMENT – 36TH ST. N. – MLK BLVD TO PEORIA AVE.

CITY OF TULSA, OKLAHOMA
ENGINEERING SERVICES DEPARTMENT

PLANS AND ESTIMATES PREPARED BY: PEC — PROFESSIONAL ENGINEERING CONSULTANTS, P.A. 1924 S. UTICA AVE., SUITE 1400 TULSA, OK 74104 918-664-5400 www.pec1.com

PLAN SCALE: 1" =
PROFILE SCALE:
HORIZONTAL: 1" =
VERTICAL 1" =

DRAWN	BFS	01/2020	APPROVED:
DESIGNED	JPD	01/2020	
SURVEY			
PROJ. MGR.			
LEAD ENGR.	[illegible]	08/20	
FIELD MGR.	[illegible]	8/20	
RECOMMENDED: DESIGN MANAGER	[illegible]	9.20	CITY ENGINEER

FILE: DRAWING: DATE: 6/30/20

ATLAS PAGE NO: 218, 219, 281, 282 SHEET 95 OF 165 SHEETS

DSWG: XXX PLOTTED BY: $USER$ SCALE: $SCALE$ $DATE$ $TIME$
$FILE$

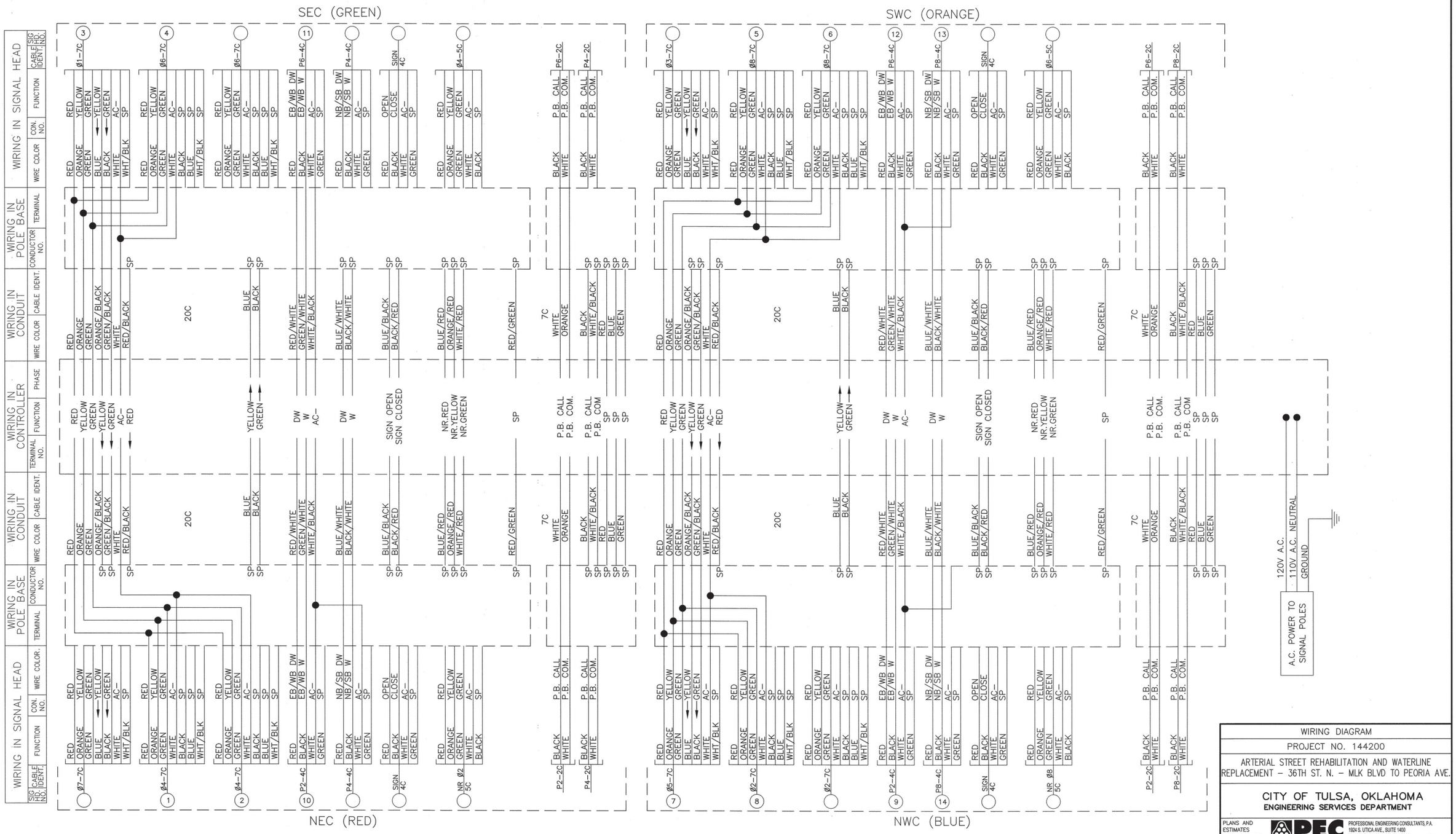

NOTE:
IF JUMPERS OR OTHER CONNECTIONS ARE MADE IN THE FIELD DURING INSTALLATION, AND ARE ACCEPTED BY THE ENGINEER, THIS SHOULD BE SHOWN ON THE WIRING DIAGRAM FOR FUTURE REFERENCE.

LICENSED PROFESSIONAL ENGINEER
JASON P. DICKMAN
27639
OKLAHOMA
07/19/2020

REVISION	BY	DATE

WIRING DIAGRAM

PROJECT NO. 144200

ARTERIAL STREET REHABILITATION AND WATERLINE REPLACEMENT – 36TH ST. N. – MLK BLVD TO PEORIA AVE.

CITY OF TULSA, OKLAHOMA
ENGINEERING SERVICES DEPARTMENT

PLANS AND ESTIMATES PREPARED BY: PEC PROFESSIONAL ENGINEERING CONSULTANTS, P.A. 1924 S. UTICA AVE., SUITE 1400 TULSA, OK 74104 918-894-5400 www.pec1.com

PLAN SCALE: 1" =	DRAWN	BFS	01/2020	APPROVED:
	DESIGNED	JPD	01/2020	
	SURVEY			
PROFILE SCALE:	PROJ. MGR.			
HORIZONTAL: 1" =	LEAD ENGR.	BFS	08/20	
	FIELD MGR.	JPD	8/20	
VERTICAL 1" =	RECOMMENDED	BFS	9-20	CITY ENGINEER
	DESIGN MANAGER			
FILE:	DRAWING:			DATE: 10/30/20
ATLAS PAGE NO: 218, 219, 281, 282				SHEET 96 OF 165 SHEETS

DSNR: XXX PLOTTED BY: $USER# SCALE: $SCALE$ $DATE$ $TIME$
$FILE$

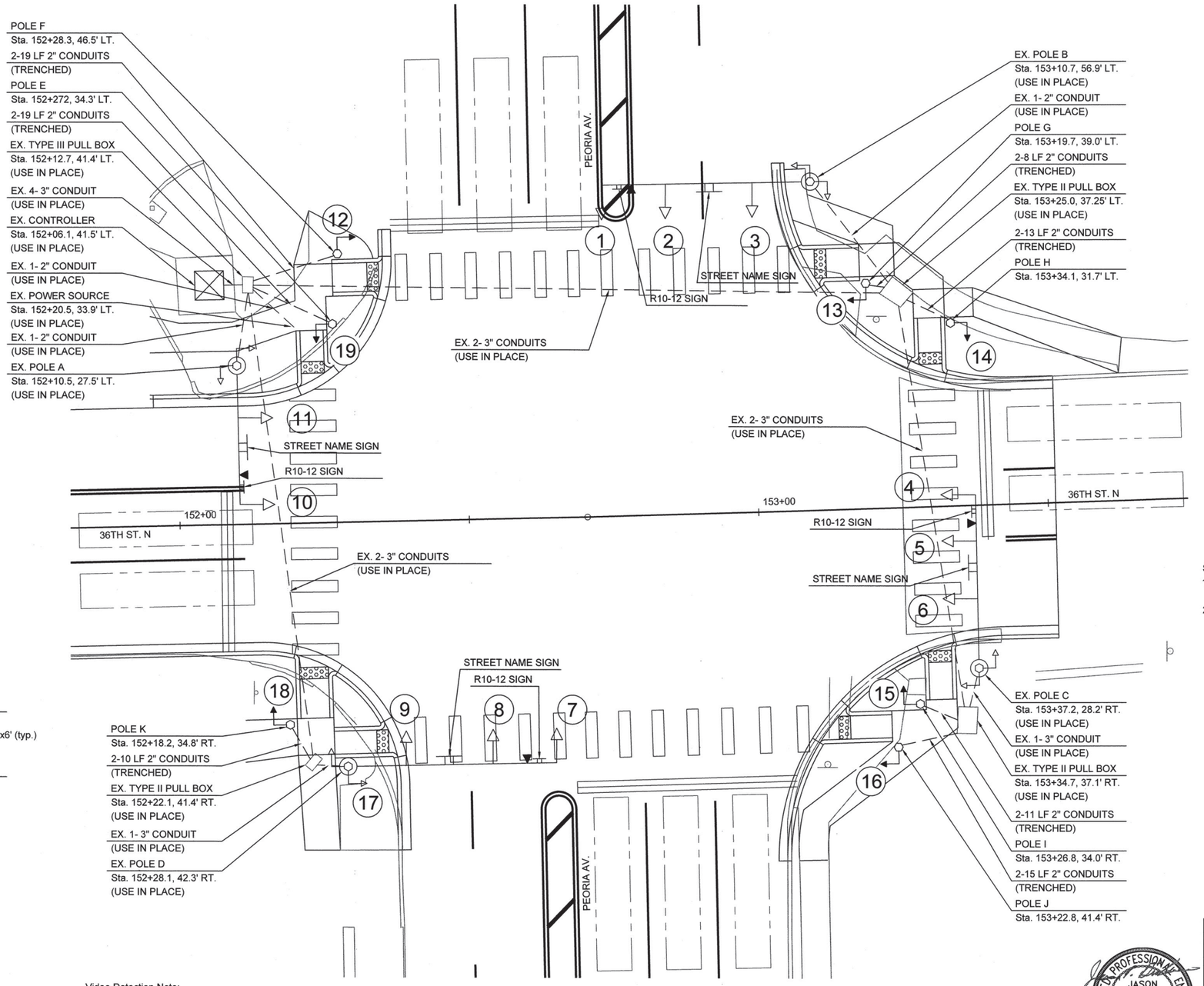

0 10 20

SCALE: 1" = 10'

LEGEND OF PROPOSED TRAFFIC ITEMS

- CONTROLLER
- MAST ARM AND POLE
- 12' PEDESTAL POLE W/ PUSH BUTTON(S)
- TRAFFIC SIGNAL HEAD W/ BACKPLATE
- LUMINAIRE
- PEDESTRIAN HEAD
- VEHICLE DETECTOR
- MAST ARM SIGN

SPEECH MESSAGES for APS:

1. Upon WALK for P2/P6 (BLock # A3) - "Peoria, WALK sign is on for Peoria."
2. Upon WALK for P4/P8 (BLOCK #B3) - "36th Street, WALK sign is on for 36th Street."

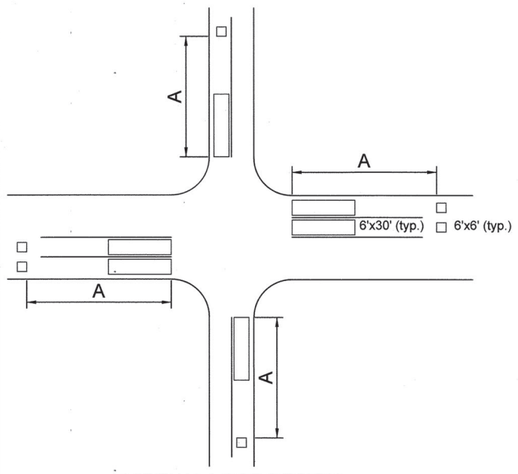

VIRTUAL LOOP DESIGN FOR INFRARED DETECTION (TYPICAL LAYOUT)

DETECTOR PLACEMENT "A"	
30 mph	220'
35 mph	256'
40 mph	293'
45 mph	330'

VIRTUAL LOOP DESIGN FOR VIDEO DETECTION

1 (NB) & 2 (SB)	
OUTPUT 1	SB
OUTPUT 2	SBLT
OUTPUT 3	NB
OUTPUT 4	NBLT

3 (EB) & 4 (WB)	
OUTPUT 1	WB
OUTPUT 2	WBLT
OUTPUT 3	EB
OUTPUT 4	EBLT

Video Detection Note:
Video detection will be provided for this intersection. The detector loops shown are only to depict the areas of detection along with the phases that each video detector unit will call.

Push Button Note:
The pole enlargement detail is provided for informational purposes only. The signal heads shall be installed on the poles such that the signal heads are visible from the crosswalk. The push buttons shall be installed such that the push buttons are unobstructed and adjacent to the level, all-weather surface, allowing access from a wheelchair. The push buttons are to be mounted on the side of the pole closest to the corresponding crosswalk. Push buttons shall be located within 10 inches of the level, all-weather surface, and no more than 10 feet from face of curb at ramp.

CONSTRUCTION NOTES:

1. Contractor shall remove EX. P2/P8 Pedestrian Signal Heads (#33) and Push Buttons from EX. POLE A (NW Corner). Contractor shall relocate the Pedestrian Signal Heads to proposed POLE E and POLE F. Contractor shall install ADA-compliant APS Push Buttons on proposed POLE E and POLE F.
2. Contractor shall remove EX. P2/P4 Pedestrian Signal Heads (#33) and Push Buttons from EX. POLE B (NE Corner). Contractor shall relocate the Pedestrian Signal Heads to proposed POLE G and POLE H. Contractor shall install ADA-compliant APS Push Buttons on proposed POLE G and POLE H.
3. Contractor shall remove EX. P4/P6 Pedestrian Signal Heads (#33) and Push Buttons from EX. POLE C (SE Corner). Contractor shall relocate the Pedestrian Signal Heads to proposed POLE I and POLE J. Contractor shall install ADA-compliant APS Push Buttons with Speech Messaging on proposed POLE I and POLE J.
4. Contractor shall remove EX. P8 Pedestrian Signal Head (#33) and Push Button from EX. POLE D (SW Corner). Contractor shall relocate the Pedestrian Signal Head to proposed POLE K. Contractor shall install ADA-compliant APS Push Buttons with Speech Messaging on Ex. POLE D and proposed POLE K.

BEFORE YOU DIG 811 1-800-522-OKIE CALL OKIE

LICENSED PROFESSIONAL ENGINEER JASON P. DICKMAN 27639 OKLAHOMA

08/13/2020

REVISION	BY	DATE

TRAFFIC SIGNAL PLAN – E. 36TH ST. & N. PEORIA AVE.

PROJECT NO. 144200

ARTERIAL STREET REHABILITATION AND WATERLINE REPLACEMENT – 36TH ST. N. – MLK BLVD TO PEORIA AVE.

CITY OF TULSA, OKLAHOMA
ENGINEERING SERVICES DEPARTMENT

PLANS AND ESTIMATES PREPARED BY: PEC PROFESSIONAL ENGINEERING CONSULTANTS, P.A. 1924 S. UTICA AVE., SUITE 1400 TULSA, OK 74104 918-994-5400 www.pec1.com

PLAN SCALE: 1" =	DRAWN	BFS	01/2020	APPROVED:
	DESIGNED	JPD	01/2020	
	SURVEY			
PROFILE SCALE:	PROJ. MGR.			
HORIZONTAL: 1" =	LEAD ENGR.		08/20	
	FIELD MGR.		8/20	
VERTICAL 1" =	RECOMMENDED: DESIGN MANAGER			CITY ENGINEER
FILE:	DRAWING:			DATE: 12/30/20
ATLAS PAGE NO: 218, 219, 281, 282				SHEET 97 OF 165 SHEETS

DSNR: XXX PLOTTED BY: $USER$ SCALE: $SCALE$ $DATE$ $TIME$
$FILE$

PHASING DIAGRAM

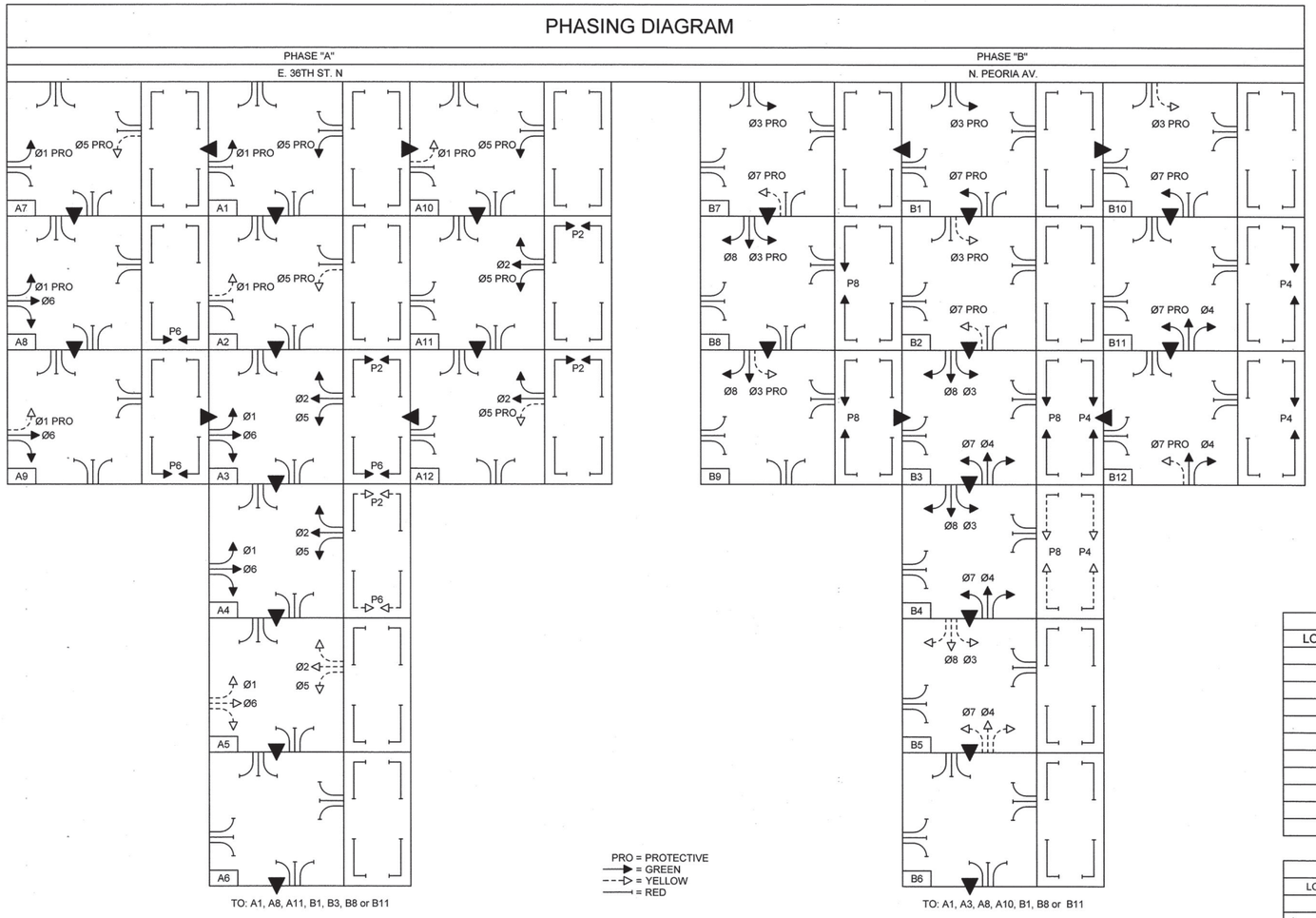

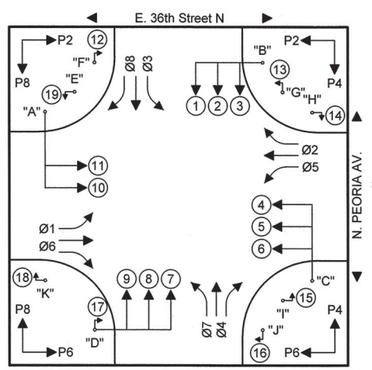

BLOCK NUMBER	DIRECTION	SIGNAL HEAD NO.										
		1	2/3	4	5/6	7	8/9	10	11	12/13	14/15	16/17	18/19
A1	Ø1 & Ø5 ROW, OVL A & B	R	R	~~G~~	R	R	R	~~G~~	R	DW	DW	DW	DW
A2	Ø1 & Ø5 CL, OVL A & B CL	R	R	~~Y~~	R	R	R	~~Y~~	R	DW	DW	DW	DW
A3	Ø2, Ø6, P2 & P6 ROW	R	R	G	G	R	R	G	G	W	DW	W	DW
A4	Ø2 & Ø6 ROW, P2 & P6 CL	R	R	G	G	R	R	G	G	FDW	DW	FDW	DW
A5	Ø2 & Ø6 CL	R	R	Y	Y	R	R	Y	Y	DW	DW	DW	DW
A6	ALL RED	R	R	R	R	R	R	R	R	DW	DW	DW	DW
A7	Ø1 ROW, Ø5 CL, OVL A & B CL	R	R	~~G~~	R	R	R	~~Y~~	R	DW	DW	DW	DW
A8	Ø1, Ø6 & P6 ROW, OVL A	R	R	~~G~~	G	R	R	R	R	DW	DW	W	DW
A9	Ø6 & P6 ROW, Ø1 CL, OVL A CL	R	R	~~Y~~	G	R	R	R	R	DW	DW	W	DW
A10	Ø5 ROW, Ø1 CL, OVL A CL, OVL B	R	R	~~Y~~	R	R	R	~~G~~	R	DW	DW	DW	DW
A11	Ø2, Ø5 & P2 ROW, OVL B	R	R	R	R	R	R	~~G~~	G	W	DW	DW	DW
A12	Ø2 & P2 ROW, Ø5 CL, OVL B CL	R	R	R	R	R	R	~~Y~~	G	W	DW	DW	DW
B1	Ø3 & Ø7 ROW, OVL C & D	~~G~~	R	R	R	~~G~~	R	R	R	DW	DW	DW	DW
B2	Ø3 & Ø7 CL, OVL C & D CL	~~Y~~	R	R	R	~~Y~~	R	R	R	DW	DW	DW	DW
B3	Ø4, Ø8, P4 & P8 ROW	G	G	R	R	G	G	R	R	DW	W	DW	W
B4	Ø4, Ø8 ROW, P4 & P8 CL	G	G	R	R	G	G	R	R	DW	FDW	DW	FDW
B5	Ø4 & Ø8 CL	Y	Y	R	R	Y	Y	R	R	DW	DW	DW	DW
B6	ALL RED	R	R	R	R	R	R	R	R	DW	DW	DW	DW
B7	Ø3 ROW, Ø7 CL, OVL C & D CL	~~Y~~	R	R	R	~~G~~	R	R	R	DW	DW	DW	DW
B8	Ø3, Ø8 & P8 ROW, OVL D	R	R	R	R	~~G~~	G	R	R	DW	DW	DW	W
B9	Ø8 & P8 ROW, Ø3 CL, OVL D CL	R	R	R	R	~~Y~~	G	R	R	DW	DW	DW	W
B10	Ø7 ROW, Ø3 CL, OVL C, OVL D CL	~~G~~	R	R	R	~~Y~~	R	R	R	DW	DW	DW	DW
B11	Ø4, Ø7 & P4 ROW, OVL C	~~G~~	G	R	R	R	R	R	R	DW	W	DW	DW
B12	Ø4 & P4 ROW, Ø7 CL, OVL C CL	~~Y~~	G	R	R	R	R	R	R	DW	W	DW	DW
	FLASHING RED	FR	FR	FR	FR	FR	FR	FR	FR	DW	DW	DW	DW

TABLE #1 SIGNAL HEADS

SIGNAL HEAD NUMBER	PROP./EX.	NUMBER AND TYPE	MOUNTING	VISOR	BACKPLATE
2, 3, 5, 6, 8, 9, 11	EXISTING	7-ONEWAY(#36)	MAST ARM	V-1	B-2
1, 4, 7, 10	EXISTING	4-ONEWAY(#64L)	MAST ARM	V-1	B-2
12, 13, 14, 15, 16, 17, 18, 19	EXISTING	8-ONEWAY(#33)	CLAMP	---	---

TABLE #2 MAST ARMS & POLES

LOCATION	PROP./EX.	TYPE	MOUNTING HT.	MAST ARM LEN.	FOUNDATION	LUM MT. HT.	LUM ARM LEN.
A	EXISTING	STD. POLE	20'	24'	---	---	---
B	EXISTING	STD. POLE	20'	36'	---	---	---
C	EXISTING	STD. POLE	20'	30'	---	---	---
D	EXISTING	STD. POLE	20'	36'	---	---	---
E	PROPOSED	PEDESTAL POLE	10'	N/A	F-1	---	---
F	PROPOSED	PEDESTAL POLE	10'	N/A	F-1	---	---
G	PROPOSED	PEDESTAL POLE	10'	N/A	F-1	---	---
H	PROPOSED	PEDESTAL POLE	10'	N/A	F-1	---	---
I	PROPOSED	PEDESTAL POLE	10'	N/A	F-1	---	---
J	PROPOSED	PEDESTAL POLE	10'	N/A	F-1	---	---
K	PROPOSED	PEDESTAL POLE	10'	N/A	F-1	---	---

TABLE #3 ELECTRICAL CABLE

LOCATION	EXISTING ELECTRICAL CABLE (USE IN PLACE)	NEW ELECTRICAL CABLE
A	20C#14 / 7C#14 / VIDEO / OPTICOM / (2) #6 THHN GREEN / #12 THHN GREEN	(2) 4C#14 / (2) 2C#14 / (2) #6 THHN GREEN
B	20C#14 / 7C#14 / VIDEO / OPTICOM / (2) #6 THHN GREEN / #12 THHN GREEN	(2) 4C#14 / (2) 2C#14 / (2) #6 THHN GREEN
C	20C#14 / 7C#14 / VIDEO / #6 THHN GREEN / #12 THHN GREEN	(2) 4C#14 / (2) 2C#14 / (2) #6 THHN GREEN
D	20C#14 / 7C#14 / VIDEO / #6 THHN GREEN / #12 THHN GREEN	4C#14 / 2C#14 / #6 THHN GREEN
E	N/A	4C#14 / 2C#14 / #6 THHN GREEN / #12 THHN GREEN
F	N/A	4C#14 / 2C#14 / #6 THHN GREEN / #12 THHN GREEN
G	N/A	4C#14 / 2C#14 / #6 THHN GREEN / #12 THHN GREEN
H	N/A	4C#14 / 2C#14 / #6 THHN GREEN / #12 THHN GREEN
I	N/A	4C#14 / 2C#14 / #6 THHN GREEN / #12 THHN GREEN
J	N/A	4C#14 / 2C#14 / #6 THHN GREEN / #12 THHN GREEN
K	N/A	4C#14 / 2C#14 / #6 THHN GREEN / #12 THHN GREEN

LICENSED PROFESSIONAL ENGINEER
JASON P. DICKMAN 27639
OKLAHOMA
08/13/2020

REVISION	BY	DATE

PHASING DIAGRAM

PROJECT NO. 144200

ARTERIAL STREET REHABILITATION AND WATERLINE REPLACEMENT – 36TH ST. N. – MLK BLVD TO PEORIA AVE.

CITY OF TULSA, OKLAHOMA
ENGINEERING SERVICES DEPARTMENT

PLANS AND ESTIMATES PREPARED BY:

PEC PROFESSIONAL ENGINEERING CONSULTANTS, P.A.
1924 S. UTICA AVE., SUITE 1400
TULSA, OK 74104 918-664-5400 www.pec1.com

PLAN SCALE: 1" =	DRAWN	BFS	01/2020
	DESIGNED	JPD	01/2020
	SURVEY		
PROFILE SCALE:	PROJ. MGR.		
HORIZONTAL: 1" =	LEAD ENGR.	JPD	08/20
	FIELD MGR.		
VERTICAL 1" =	RECOMMENDED: DESIGN MANAGER	JPD	9.20

APPROVED: CITY ENGINEER

FILE: DRAWING: DATE: 10/30/20

ATLAS PAGE NO: 218, 219, 281, 282 SHEET 98 OF 165 SHEETS

DSNR: XXX PLOTTED BY: $USER$ SCALE: $SCALE$ $DATE$ $TIME$ $FILE$

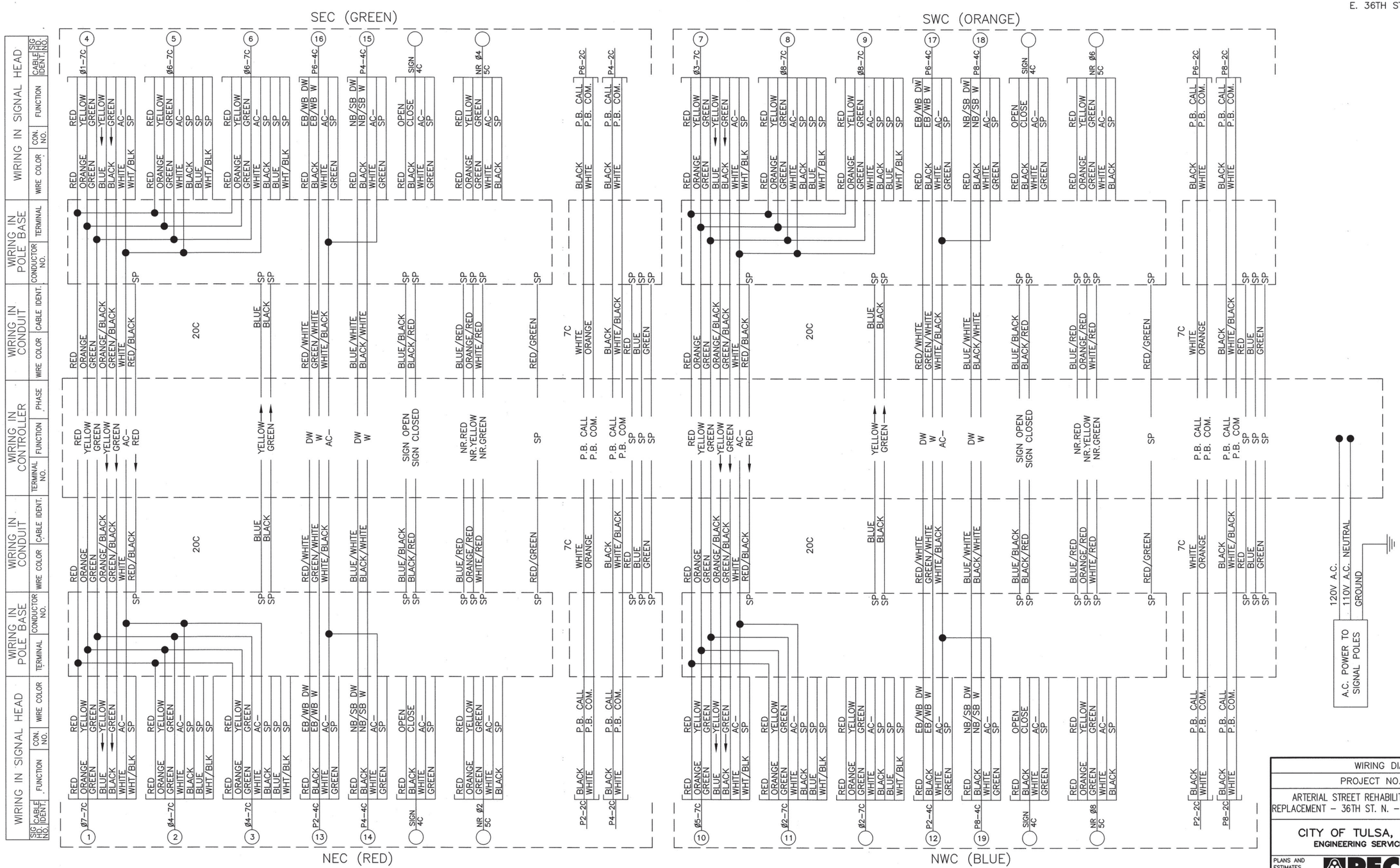

NOTE:
IF JUMPERS OR OTHER CONNECTIONS ARE MADE IN THE FIELD DURING INSTALLATION, AND ARE ACCEPTED BY THE ENGINEER, THIS SHOULD BE SHOWN ON THE WIRING DIAGRAM FOR FUTURE REFERENCE.

LICENSED PROFESSIONAL ENGINEER
JASON P. DICKMAN
27639
OKLAHOMA
08/13/2020

WIRING DIAGRAM

PROJECT NO. 144200

ARTERIAL STREET REHABILITATION AND WATERLINE REPLACEMENT – 36TH ST. N. – MLK BLVD TO PEORIA AVE.

CITY OF TULSA, OKLAHOMA
ENGINEERING SERVICES DEPARTMENT

PLANS AND ESTIMATES PREPARED BY: PEC PROFESSIONAL ENGINEERING CONSULTANTS, P.A. 1924 S. UTICA AVE., SUITE 1400 TULSA, OK 74104 918-664-5400 www.pec1.com

REVISION	BY	DATE

PLAN SCALE: 1" =	DRAWN	BFS	01/2020	APPROVED:
	DESIGNED	JPD	01/2020	
	SURVEY			
PROFILE SCALE:	PROJ. MGR.			
HORIZONTAL: 1" =	LEAD ENGR.	LGB	08/20	
	FIELD MGR.	RBM	8/20	
VERTICAL 1" =	RECOMMENDED: DESIGN MANAGER	HBS	9-20	CITY ENGINEER
FILE:	DRAWING:			DATE: 10/30/20
ATLAS PAGE NO: 218, 219, 281, 282				SHEET 99 OF 165 SHEETS

DSNR: XXX PLOTTED BY: $USER$ SCALE: $SCALE$ $DATE$ $TIME$
$FILE$

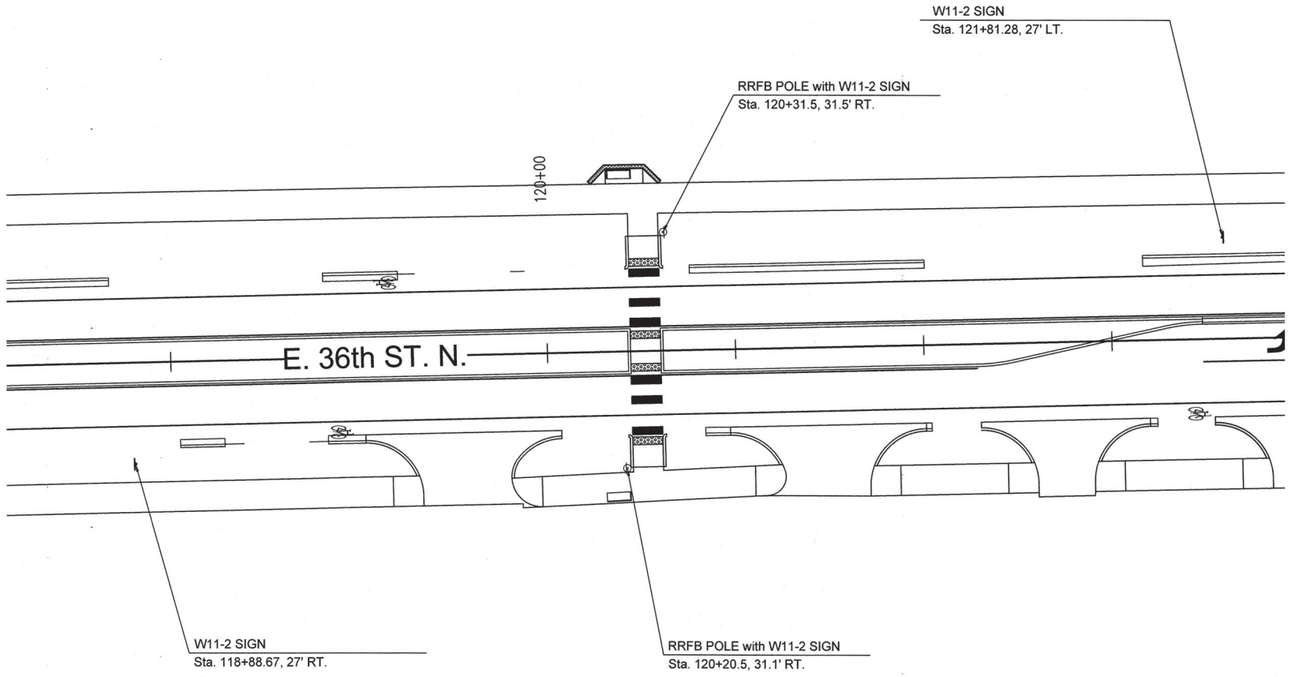

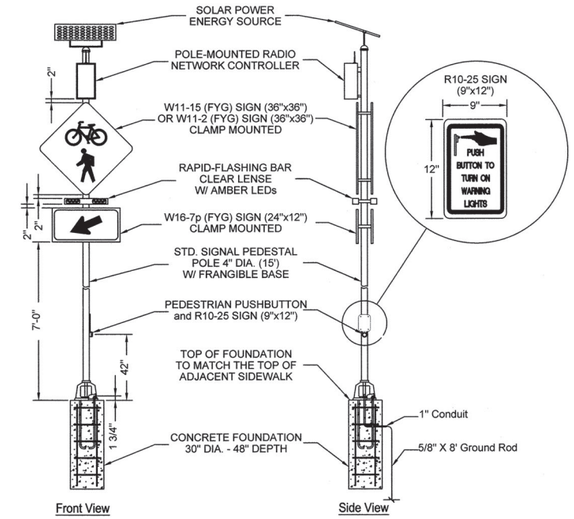

RECTANGULAR RAPID FLASHING BEACON (RRFB) SYSTEM
PEDESTRIAN PEDESTAL INSTALLATION
NTS



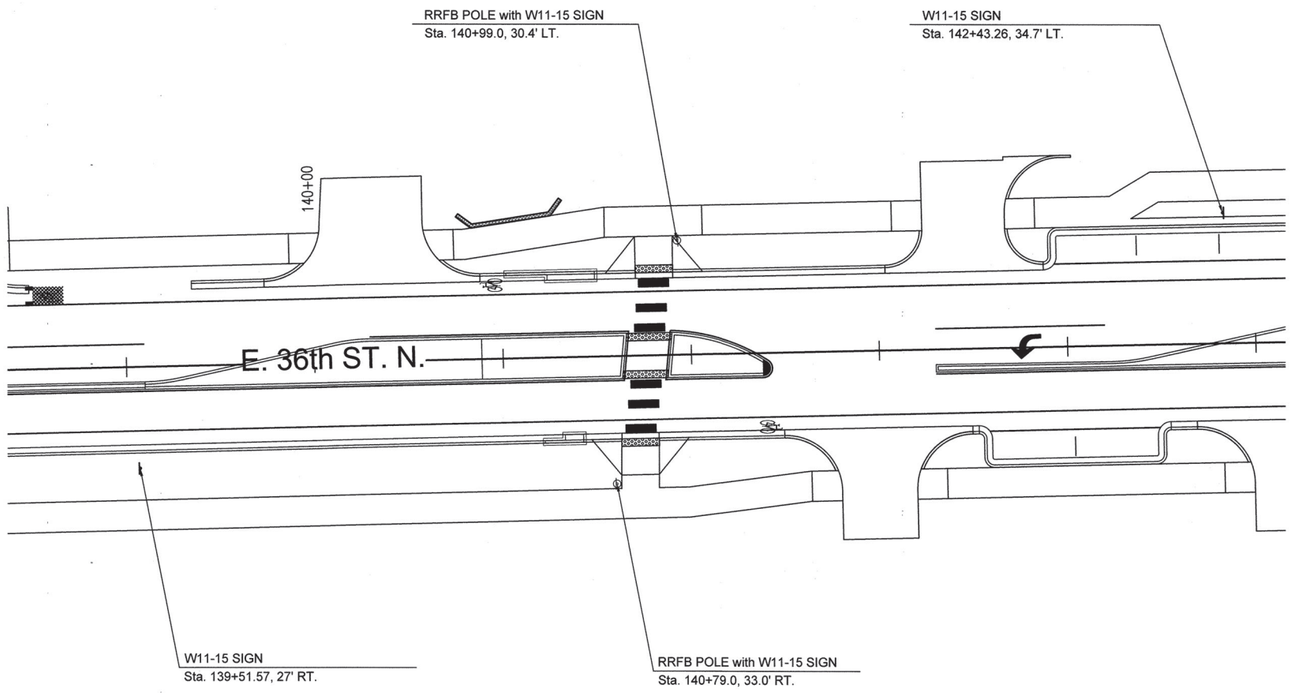

RECTANGULAR RAPID FLASHING BEACON (RRFB) SPECIFICATIONS

The bid item "RRFB Installation" will include all the material, equipment and labor to make operational the solar- powered, wireless RRFB system. This includes, but not limited to, pedestal poles, bases, signs, beacons, radio, solar panels, mounting hardware, and batteries, per the City of Tulsa standard specifications.

Each system will include:

1 each - Concrete foundation.

1 each - Pedestal pole and frangible base, 15 foot tall.

1 each - ADA compliant pedestrian push button with W10-25 sign (9"x12"), diamond grade sheeting on 0.08 aluminum panel.

2 each - W11-15 bicycle/pedestrian signs at trail crossing (W11-2 pedestrian signs at pedestrian crossing) (36"x36")(FYG), diamond grade sheeting on 0.08 aluminum panel.

1 each - W16-7pL (24"x12")(FYG) down arrow sign, diamond grade sheeting on 0.08 aluminum panel.

1 each - W16-7pR (24"x12")(FYG) down arrow sign, diamond grade sheeting on 0.08 aluminum panel.

1 each - 55 watt solar package: battery, control cabinet and wireless radio. Battery to be 12V, 40AH sealed gel, requiring no watering. Set solar panels as per manufacture, typically 40 to 60 degrees, using aluminum mounting brackets. Control cabinet to be NEMA 4 rated fiberglass with lockable clasps. Radio to operate on 900 MHz frequency hopping spread spectrum network, operating range from 3.6vdc to 15vdc. Controller timing for flasher shall be set by contractor and approved by the City. Place cabinet on side of pole at location and height approved by City.

2 each - RRFB single-sided (for back-to-back mount) units, or one (1) each double-sided unit, with pedestrian verification lights. RRFB shall meet or exceed FHWA standards. Units will be approximately 7" wide x 3" height and have five (5) beacons each. RRFB will be SAE J595 Class One certified, and will flash in yellow "wigwag" pattern. Housing color may be per manufacturer - yellow, black or aluminum. Banding to be stainless steel or zinc-plated steel.

LICENSED PROFESSIONAL ENGINEER
JASON P. DICKMAN
27639
OKLAHOMA
08/13/2020

REVISION	BY	DATE

FLASHING BEACON PLAN

PROJECT NO. 144200

ARTERIAL STREET REHABILITATION AND WATERLINE REPLACEMENT – 36TH ST. N. – MLK BLVD TO PEORIA AVE.

CITY OF TULSA, OKLAHOMA
ENGINEERING SERVICES DEPARTMENT

PLANS AND ESTIMATES PREPARED BY: PEC — PROFESSIONAL ENGINEERING CONSULTANTS, P.A. 1924 S. UTICA AVE., SUITE 1400 TULSA, OK 74104 918-664-5400 www.pec1.com

PLAN SCALE: 1" = 20'	DRAWN	BFS	01/2020	APPROVED:
	DESIGNED	JPD	01/2020	
	SURVEY			
PROFILE SCALE:	PROJ. MGR.			
HORIZONTAL: 1" =	LEAD ENGR.	BAB	08/20	
	FIELD MGR.	JPD	8/20	
VERTICAL 1" =	RECOMMENDED: DESIGN MANAGER	HBS	9.20	CITY ENGINEER

FILE: DRAWING: DATE: 10/30/20

ATLAS PAGE NO: 218, 219, 281, 282 SHEET 100 OF 165 SHEETS

DSN#: XXX PLOTTED BY: #FILE# #USER# SCALE: #SCALE# #DATE# #TIME#

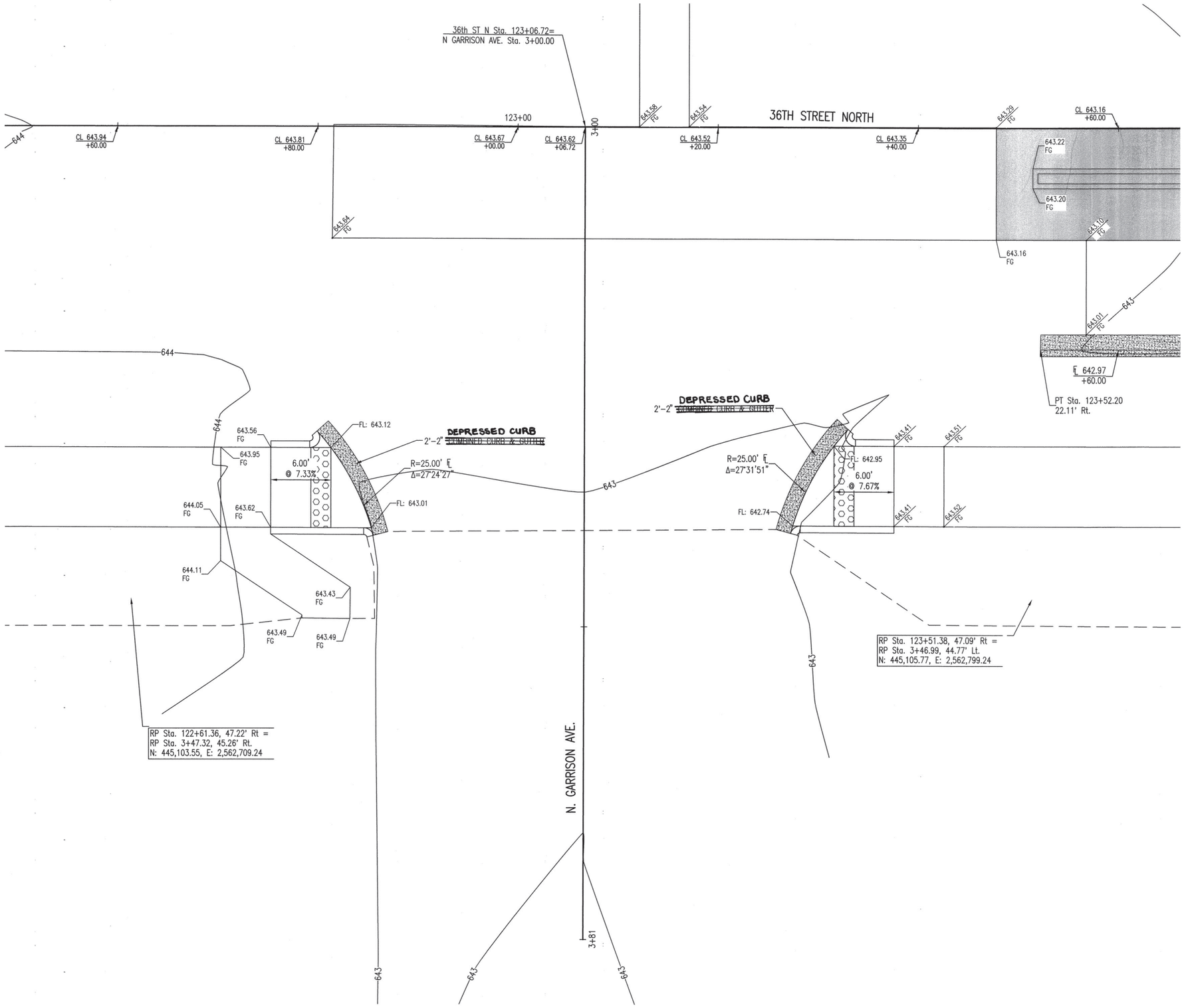

0 5 10

SCALE: 1" = 5'

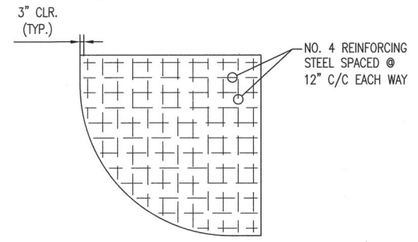

REINFORCED PANEL DETAIL
1"=5'

NOTES:

1. COST FOR REINFORCING STEEL TO BE INCLUDED IN BID PRICE FOR "P.C. CONCRETE PAVEMENT"
2. CHAIR ASSEMBLIES SHALL BE OF A TYPE APPROVED BY THE ENGINEER AND AT LEAST ONE CHAIR WILL BE REQUIRED FOR EACH 16 SQUARE FEET OF PAVEMENT, OR IN SUCH NUMBER AS TO FULLY SUPPORT THE REINFORCED STEEL. COST OF CHAIR ASSEMBLIES INCLUDED IN THE COST OF CONCRETE
3. VIBRATORY EQUIPMENT SHALL BE REQUIRED TO ENSURE COMPLETE AND UNIFORM CONSOLIDATION OF CONCRETE AROUND THE REINFORCING.
4. THE RECOMMENDED PLACEMENT OF THE LONGITUDINAL STEEL IS TO BE SUPPORTED ON TRANSVERSE STEEL AND CHAIR ASSEMBLIES. CHAIR ASSEMBLIES MUST BE USED. LONGITUDINAL STEEL SHALL BE CONSIDERED AS LAYING GENERALLY PARALLEL WITH THE CENTERLINE OF THE STREET.

LEGEND

——— – – ———	Longitudinal Joint (L.J.)
— — — — —	Sawed Contraction Joint (S.J.)
– – – – –	Expansion Joint (E.J.)
R	Reinforced Panel

BEFORE YOU DIG 811 1-800-522-OKIE CALL OKIE

LICENSED PROFESSIONAL ENGINEER JASON P. DICKMAN 27639 OKLAHOMA

07/19/2020

REVISION	BY	DATE

INTERSECTION DETAIL – E. 36TH ST. & N. GARRISON AVE.

PROJECT NO. 144200

ARTERIAL STREET REHABILITATION AND WATERLINE REPLACEMENT – 36TH ST. N. – MLK BLVD TO PEORIA AVE.

CITY OF TULSA, OKLAHOMA
ENGINEERING SERVICES DEPARTMENT

PLANS AND ESTIMATES PREPARED BY: PEC — PROFESSIONAL ENGINEERING CONSULTANTS, P.A. 1924 S. UTICA AVE., SUITE 1400 TULSA, OK 74104 918-664-5400 www.pec1.com

PLAN SCALE: 1" = 5'	DRAWN		01/2020	APPROVED:
	DESIGNED	JPD	01/2020	
	SURVEY			
PROFILE SCALE:	PROJ. MGR.		07/20	
HORIZONTAL: 1" =	LEAD ENGR.		7/20	
	FIELD MGR.		8/20	
VERTICAL 1" =	RECOMMENDED DESIGN MANAGER		9-20	CITY ENGINEER
FILE:	DRAWING:			DATE: 10/30/20
ATLAS PAGE NO: 218, 219, 281, 282				SHEET 101 OF 165 SHEETS

DSNR: XXX PLOTTED BY: $USER$ SCALE: $SCALE$ $DATE$ $TIME$ $FILE$

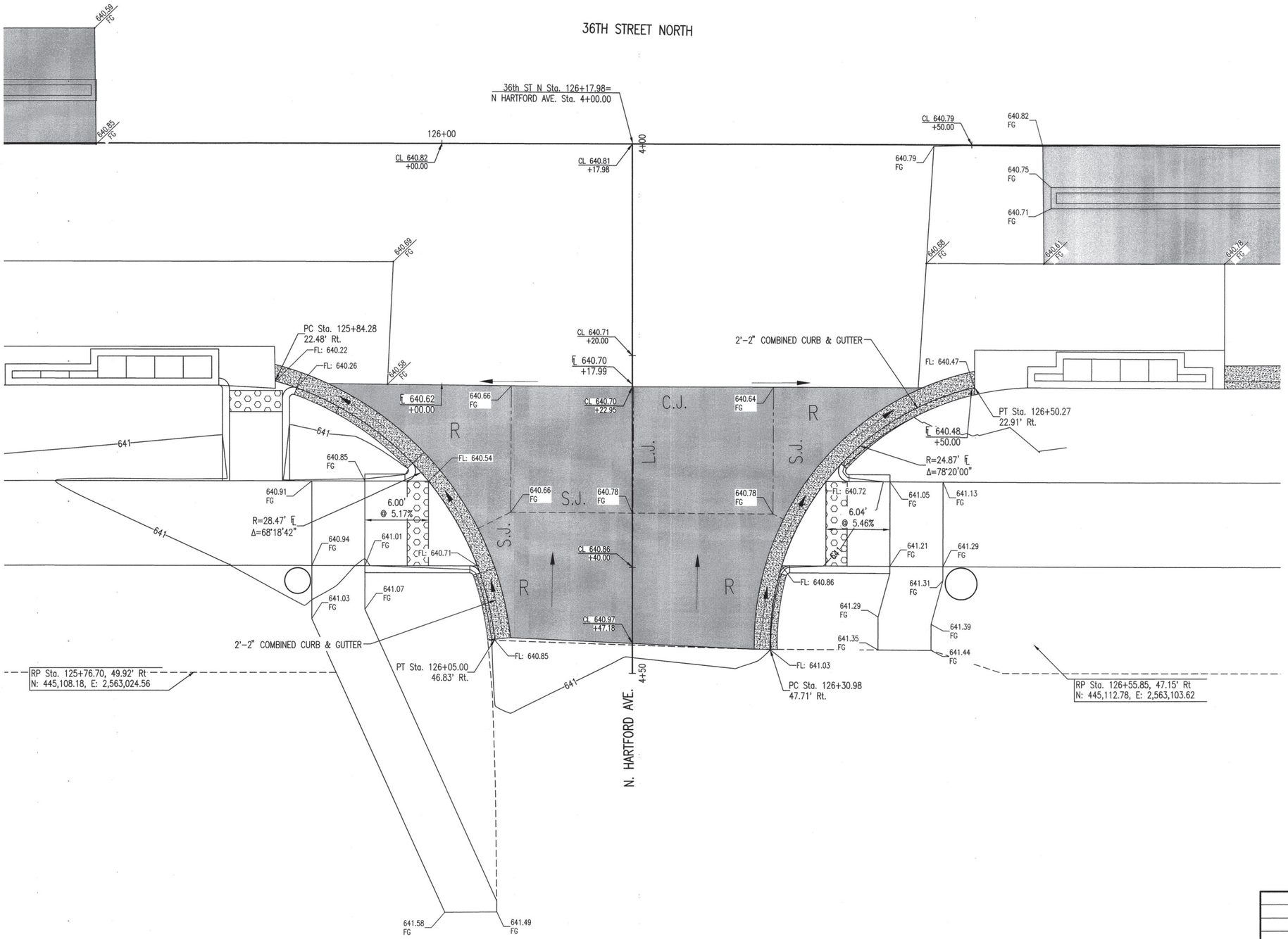

0 5 10

SCALE: 1" = 5'

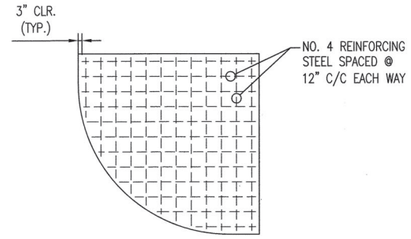

REINFORCED PANEL DETAIL
1"=5'

NOTES:

1. COST FOR REINFORCING STEEL TO BE INCLUDED IN BID PRICE FOR "P.C. CONCRETE PAVEMENT"
2. CHAIR ASSEMBLIES SHALL BE OF A TYPE APPROVED BY THE ENGINEER AND AT LEAST ONE CHAIR WILL BE REQUIRED FOR EACH 16 SQUARE FEET OF PAVEMENT, OR IN SUCH NUMBER AS TO FULLY SUPPORT THE REINFORCED STEEL. COST OF CHAIR ASSEMBLIES INCLUDED IN THE COST OF CONCRETE
3. VIBRATORY EQUIPMENT SHALL BE REQUIRED TO ENSURE COMPLETE AND UNIFORM CONSOLIDATION OF CONCRETE AROUND THE REINFORCING.
4. THE RECOMMENDED PLACEMENT OF THE LONGITUDINAL STEEL IS TO BE SUPPORTED ON TRANSVERSE STEEL AND CHAIR ASSEMBLIES. CHAIR ASSEMBLIES MUST BE USED. LONGITUDINAL STEEL SHALL BE CONSIDERED AS LAYING GENERALLY PARALLEL WITH THE CENTERLINE OF THE STREET.

LEGEND

- Longitudinal Joint (L.J.)
- Sawed Contraction Joint (S.J.)
- Expansion Joint (E.J.)
- R — Reinforced Panel

BEFORE YOU DIG 811 1-800-522-OKIE CALL OKIE

LICENSED PROFESSIONAL ENGINEER JASON P. DICKMAN 27639 OKLAHOMA
07/19/2020

INTERSECTION DETAIL – E. 36TH ST. & N. HARTFORD AVE.

PROJECT NO. 144200

ARTERIAL STREET REHABILITATION AND WATERLINE REPLACEMENT – 36TH ST. N. – MLK BLVD TO PEORIA AVE.

CITY OF TULSA, OKLAHOMA
ENGINEERING SERVICES DEPARTMENT

PLANS AND ESTIMATES PREPARED BY: PEC PROFESSIONAL ENGINEERING CONSULTANTS, P.A. 1924 S. UTICA AVE., SUITE 1400 TULSA, OK 74104 918-864-5400 www.pec1.com

REVISION	BY	DATE

PLAN SCALE: 1" = 5'	DRAWN		01/2020
	DESIGNED	JPD	01/2020
	SURVEY		
PROFILE SCALE:	PROJ. MGR.		07/20
HORIZONTAL: 1" =	LEAD ENGR.		7/20
	FIELD MGR.		7/20
VERTICAL 1" =	RECOMMENDED DESIGN MANAGER		9.20

APPROVED: CITY ENGINEER

FILE: DRAWING: DATE: 10/30/20

ATLAS PAGE NO: 218, 219, 281, 282 SHEET 102 OF 165 SHEETS

DSNR: XXX PLOTTED BY: $USER$ SCALE: $SCALE$ $DATE$ $TIME$ $FILE$

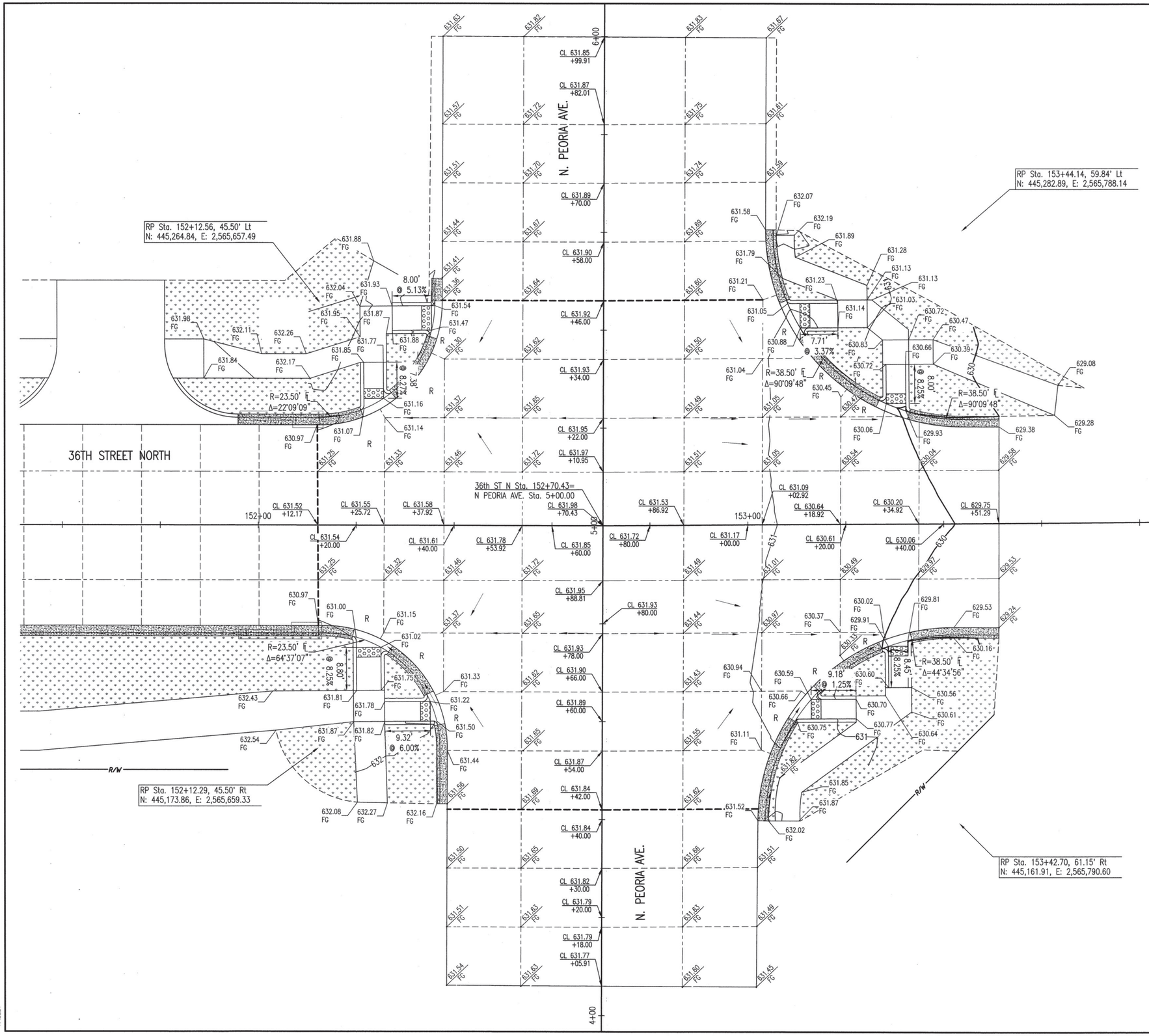

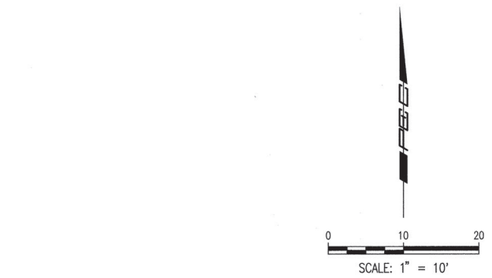

REINFORCED PANEL DETAIL
1"=5'

NOTES:

1. COST FOR REINFORCING STEEL TO BE INCLUDED IN BID PRICE FOR "P.C. CONCRETE PAVEMENT"
2. CHAIR ASSEMBLIES SHALL BE OF A TYPE APPROVED BY THE ENGINEER AND AT LEAST ONE CHAIR WILL BE REQUIRED FOR EACH 16 SQUARE FEET OF PAVEMENT, OR IN SUCH NUMBER AS TO FULLY SUPPORT THE REINFORCED STEEL. COST OF CHAIR ASSEMBLIES INCLUDED IN THE COST OF CONCRETE
3. VIBRATORY EQUIPMENT SHALL BE REQUIRED TO ENSURE COMPLETE AND UNIFORM CONSOLIDATION OF CONCRETE AROUND THE REINFORCING.
4. THE RECOMMENDED PLACEMENT OF THE LONGITUDINAL STEEL IS TO BE SUPPORTED ON TRANSVERSE STEEL AND CHAIR ASSEMBLIES. CHAIR ASSEMBLIES MUST BE USED. LONGITUDINAL STEEL SHALL BE CONSIDERED AS LAYING GENERALLY PARALLEL WITH THE CENTERLINE OF THE STREET.

LEGEND

- Longitudinal Joint (L.J.)
- Sawed Contraction Joint (S.J.)
- Expansion Joint (E.J.)
- R — Reinforced Panel

BEFORE YOU DIG CALL OKIE 811 1-800-522-OKIE

LICENSED PROFESSIONAL ENGINEER JASON P. DICKMAN 27639 OKLAHOMA
07/19/2020

REVISION	BY	DATE

INTERSECTION DETAIL – E. 36TH ST. & N. PEORIA AVE.

PROJECT NO. 144200

ARTERIAL STREET REHABILITATION AND WATERLINE REPLACEMENT – 36TH ST. N. – MLK BLVD TO PEORIA AVE.

CITY OF TULSA, OKLAHOMA
ENGINEERING SERVICES DEPARTMENT

PLANS AND ESTIMATES PREPARED BY: PEC — PROFESSIONAL ENGINEERING CONSULTANTS, P.A. 1924 S. UTICA AVE., SUITE 1400 TULSA, OK 74104 918-664-5400 www.pec1.com

PLAN SCALE: 1" = 10'	DRAWN		01/2020	APPROVED:
	DESIGNED	JPD	01/2020	
	SURVEY			
PROFILE SCALE:	PROJ. MGR.	APM	07/20	
HORIZONTAL:	LEAD ENGR.	DM	7/20	
	FIELD MGR.	ZM	8/20	
VERTICAL	RECOMMENDED DESIGN MANAGER	HAS	9.20	CITY ENGINEER
FILE:	DRAWING:			DATE: 10/30/20
ATLAS PAGE NO: 218, 219, 281, 282				SHEET 103 OF 165 SHEETS

$TIME$ $DATE$ $SCALE$ $USER$ SCALE: PLOTTED BY: XXX DSNR: $FILE$

36TH STREET NORTH REHABILITATION

TRAFFIC HANDLING AND CONSTRUCTION SEQUENCE

STAGE	MAJOR CONSTRUCTION FEATURES	TRAFFIC PATTERN
1	CONSTRUCT EASTBOUND LANE IMPROVEMENTS CONSTRUCT SIDEWALK ON SOUTH SIDE OF ROADWAY CONSTRUCT 12" WATERLINE ON SOUTH SIDE CONSTRUCT WATERLINE CROSSINGS	- EASTBOUND LANES OF TRAFFIC CLOSED. - ONE-LANE, ~~ONE~~ TWO-WAY TRAFFIC IN WESTBOUND LANES. ~~- WESTBOUND TRAFFIC ONLY~~
2	CONSTRUCT WESTBOUND LANE IMPROVEMENTS CONSTRUCT SIDEWALK ON NORTH SIDE OF ROADWAY COMPLETE WATERLINE CROSSINGS	- WESTBOUND LANES OF TRAFFIC CLOSED. - ONE-LANE, ~~ONE~~ TWO-WAY TRAFFIC IN EASTBOUND LANES. ~~- EASTBOUND TRAFFIC ONLY~~.
3	FINAL GRADING AND SODDING FINAL CLEANUP	ALL LANES OPEN TO TRAFFIC.

NOTE: PLACE W3-5a "REDUCED SPEED ZONE AHEAD" SIGN IN ADVANCE OF EACH ADVANCED WARNING SIGN SERIES IN EACH DIRECTION FOR ALL STAGES OF CONSTRUCTION.

RIGHT TURN MOVEMENTS ARE TO BE ALLOWED THROUGHOUT CONSTRUCTION, EXCEPT FOR MINIMAL CLOSURE DURING CONSTRUCTION OF ADJACENT PAVEMENT PANELS.

BAG ALL EXISTING SIGNS THAT ARE IN CONFLICT WITH PROPOSED TRAFFIC CONTROL SIGNS, INCLUDING THE SIGNAL HEADS FOR LEFT TURN LANES WHEN LEFT TURNS ARE NOT PERMITTED. WHEN LEFT TURN SIGNAL HEAD IS BAGGED, ADD "NO LEFT TURN" SIGN ON MAST ARM.

LICENSED PROFESSIONAL ENGINEER
JASON P. DICKMAN
27639
OKLAHOMA
07/19/2020

REVISION	BY	DATE

SEQUENCE OF CONSTRUCTION

PROJECT NO. 144200

ARTERIAL STREET REHABILITATION AND WATERLINE REPLACEMENT – 36TH ST. N. – MLK BLVD TO PEORIA AVE.

CITY OF TULSA, OKLAHOMA
ENGINEERING SERVICES DEPARTMENT

PLANS AND ESTIMATES PREPARED BY: PEC PROFESSIONAL ENGINEERING CONSULTANTS, P.A. 1924 S. UTICA AVE., SUITE 1400 TULSA, OK 74104 918-664-5400 www.pec1.com

PLAN SCALE: 1" =	DRAWN	BFS	01/2020
	DESIGNED	JPD	01/2020
	SURVEY		
PROFILE SCALE:	PROJ. MGR.	[illegible]	07/20
HORIZONTAL: 1" =	LEAD ENGR.	[illegible]	7/20
	FIELD MGR.	[illegible]	8/20
VERTICAL 1" =	RECOMMENDED: HAS 9-20 DESIGN MANAGER		

APPROVED:

CITY ENGINEER

FILE: DRAWING: DATE: 10/30/20

ATLAS PAGE NO: 218, 219, 281, 282

SHEET 104 OF 165 SHEETS

DSNR: XXX PLOTTED BY: $USER$ SCALE: $SCALE$ $DATE$ $TIME$
$FILE$

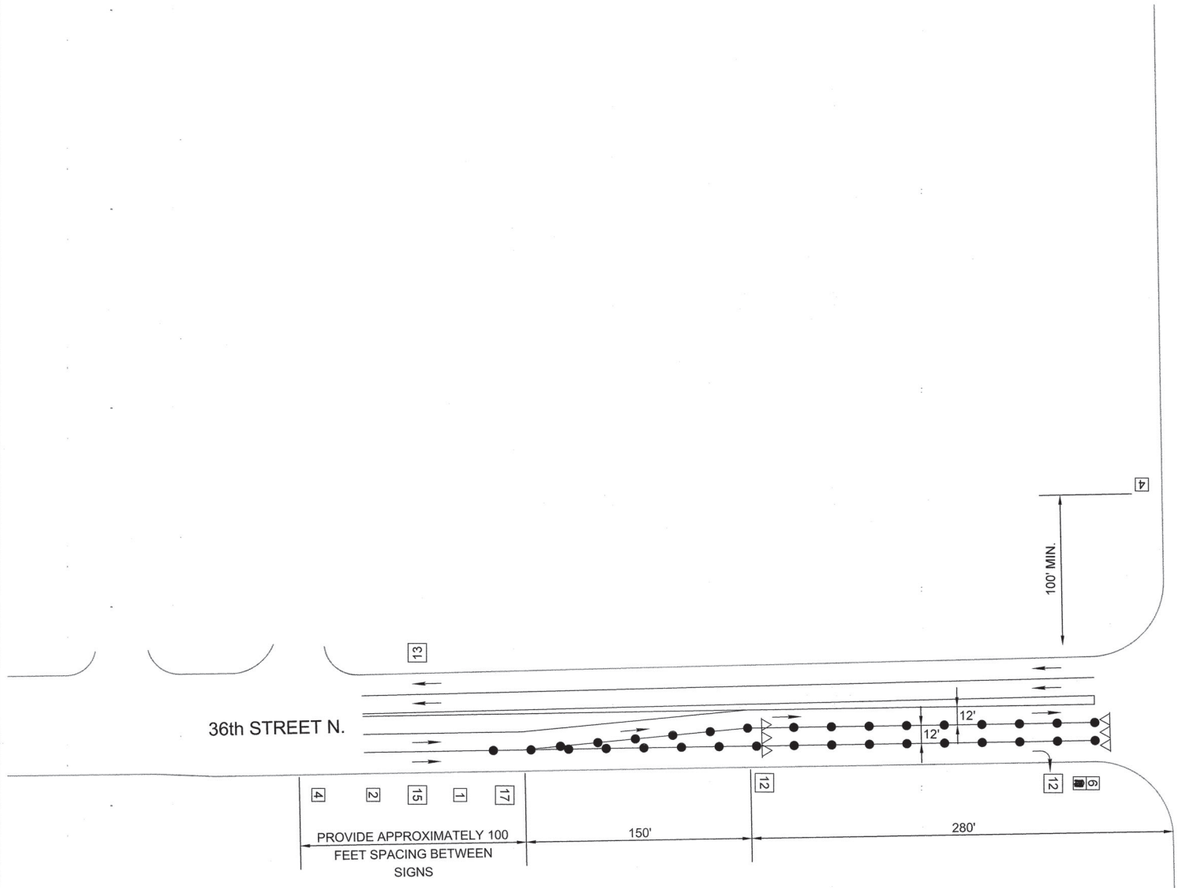

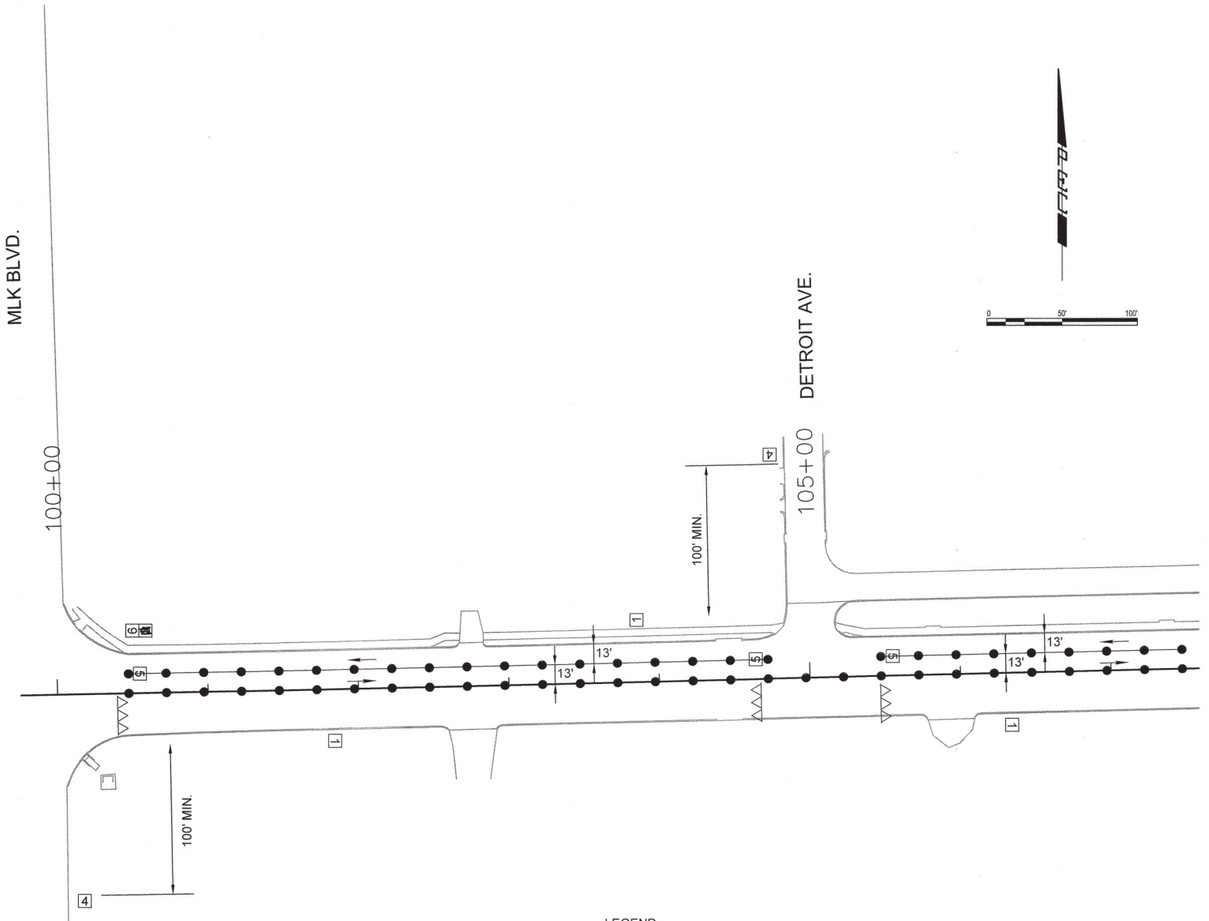

1 PLACE R2-1 (25) "SPEED LIMIT 25" SIGN

2 PLACE R2-1 (30) "SPEED LIMIT 30" SIGN

3 PLACE R3-2 "NO LEFT TURN" SIGN

4 PLACE CW20-1 "ROAD WORK AHEAD" SIGN

5 PLACE R4-7A(R) "KEEP RIGHT" SIGN

6 PLACE R10-6 "STOP HERE ON RED" SIGN

7 PLACE CW1-4(L) "LEFT REVERSE CURVE" SIGN

8 PLACE CW1-4(R) "RIGHT REVERSE CURVE" SIGN

9 PLACE CW20-5(L) "LEFT LANE CLOSED AHEAD" SIGN

10 PLACE CW20-5(R) "RIGHT LANE CLOSED AHEAD" SIGN

11 PLACE R3-7(L) "LEFT LANE MUST TURN LEFT" SIGN

12 PLACE R3-7(R) "RIGHT LANE MUST TURN RIGHT" SIGN

13 PLACE CG20-2A "END ROAD WORK" SIGN

14 PLACE W6-3 "TWO WAY TRAFFIC" SIGN

15 PLACE CW9-2(L) "LANE ENDS MERGE LEFT" SIGN

16 PLACE CW9-2(R) "LANE ENDS MERGE RIGHT" SIGN

17 PLACE W12-1 "DOUBLE ARROW" SIGN

LEGEND

- CHANNELIZING DEVICE WITH TYPE "C" LIGHT
- TYPE III BARRICADE WITH TYPE "A" LIGHT
- DIRECTION OF TRAFFIC

NOTE:
1. PHASE 1 - TWO-LANE, TWO-WAY TRAFFIC ON NORTH HALF
2. ACCESS TO RESIDENCE/BUSINESS TO REMAIN OPEN AT ALL TIMES

LICENSED PROFESSIONAL ENGINEER
JASON P. DICKMAN 27639
OKLAHOMA
07/19/2020

TRAFFIC CONTROL PHASE 1–1

PROJECT NO. 144200

ARTERIAL STREET REHABILITATION AND WATERLINE REPLACEMENT – 36TH ST. N. – MLK BLVD TO PEORIA AVE.

CITY OF TULSA, OKLAHOMA
ENGINEERING SERVICES DEPARTMENT

PLANS AND ESTIMATES PREPARED BY: PEC PROFESSIONAL ENGINEERING CONSULTANTS, P.A. 1924 S. UTICA AVE., SUITE 1400 TULSA, OK 74104 918-664-5400 www.pec1.com

REVISION	BY	DATE

PLAN SCALE: 1" =
PROFILE SCALE:
HORIZONTAL: 1" = 50'
VERTICAL 1" =

DRAWN	BFS	01/2020
DESIGNED	JPD	01/2020
SURVEY		
PROJ. MGR.		7/20
LEAD ENGR.		7/20
FIELD MGR.		7/20
RECOMMENDED: DESIGN MANAGER		7/20

APPROVED: CITY ENGINEER

FILE: DRAWING:

DATE: 10/30/20

ATLAS PAGE NO: 218, 219, 281, 282

SHEET 105 OF 165 SHEETS

DSNR: XXX PLOTTED BY: $USER$ SCALE: $SCALE$ $DATE$ $TIME$ $FILE$

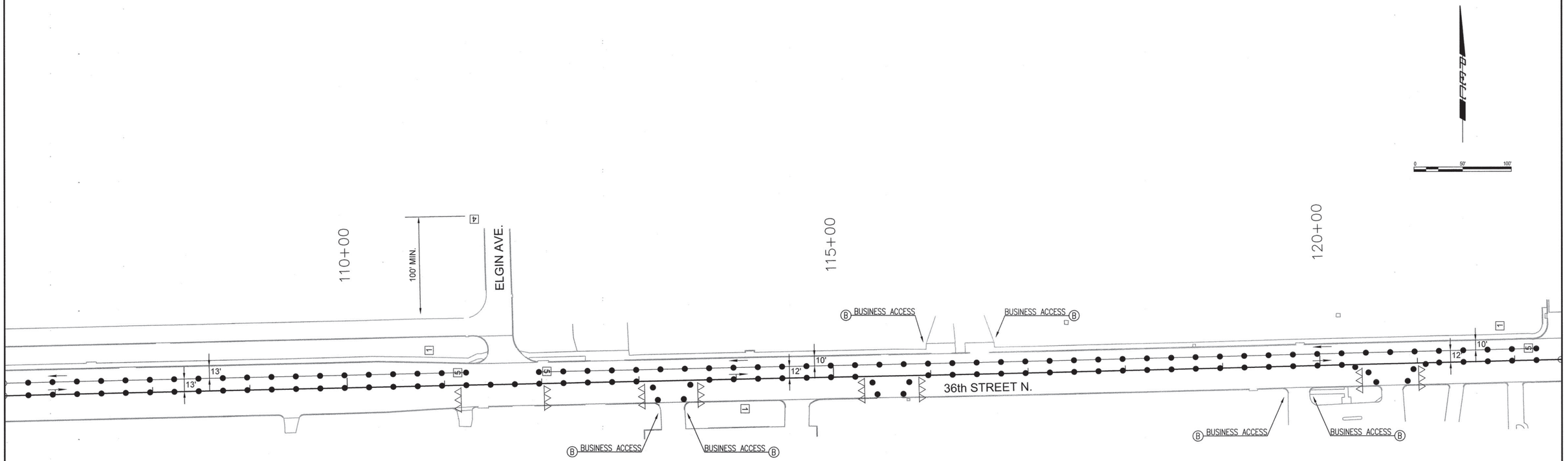

1. PLACE R2-1 (25) "SPEED LIMIT 25" SIGN
2. PLACE R2-1 (30) "SPEED LIMIT 30" SIGN
3. PLACE R3-2 "NO LEFT TURN" SIGN
4. PLACE CW20-1 "ROAD WORK AHEAD" SIGN
5. PLACE R4-7A(R) "KEEP RIGHT" SIGN
6. PLACE R10-6 "STOP HERE ON RED" SIGN
7. PLACE CW1-4(L) "LEFT REVERSE CURVE" SIGN
8. PLACE CW1-4(R) "RIGHT REVERSE CURVE" SIGN
9. PLACE CW20-5(L) "LEFT LANE CLOSED AHEAD" SIGN
10. PLACE CW20-5(R) "RIGHT LANE CLOSED AHEAD" SIGN
11. PLACE R3-7(L) "LEFT LANE MUST TURN LEFT" SIGN
12. PLACE R3-7(R) "RIGHT LANE MUST TURN RIGHT" SIGN
13. PLACE CG20-2A "END ROAD WORK" SIGN
14. PLACE W6-3 "TWO WAY TRAFFIC" SIGN
15. PLACE CW9-2(L) "LANE ENDS MERGE LEFT" SIGN
16. PLACE CW9-2(R) "LANE ENDS MERGE RIGHT" SIGN
17. PLACE W12-1 "DOUBLE ARROW" SIGN

LEGEND

- ● CHANNELIZING DEVICE WITH TYPE "C" LIGHT
- △△△ TYPE III BARRICADE WITH TYPE "A" LIGHT
- DIRECTION OF TRAFFIC

NOTE:
1. PHASE 1 - TWO-LANE, TWO-WAY TRAFFIC ON NORTH HALF
2. ACCESS TO RESIDENCE/BUSINESS TO REMAIN OPEN AT ALL TIMES

LICENSED PROFESSIONAL ENGINEER
JASON P. DICKMAN
27639
OKLAHOMA
07/19/2020

REVISION	BY	DATE

TRAFFIC CONTROL PHASE 1–2

PROJECT NO. 144200

ARTERIAL STREET REHABILITATION AND WATERLINE REPLACEMENT – 36TH ST. N. – MLK BLVD TO PEORIA AVE.

CITY OF TULSA, OKLAHOMA
ENGINEERING SERVICES DEPARTMENT

PLANS AND ESTIMATES PREPARED BY: PEC — PROFESSIONAL ENGINEERING CONSULTANTS, P.A. 1924 S. UTICA AVE., SUITE 1400 TULSA, OK 74104 918-664-5400 www.pec1.com

PLAN SCALE: 1" = 50'	DRAWN	BFS	01/2020	APPROVED:
	DESIGNED	JPD	01/2020	
	SURVEY			
PROFILE SCALE:	PROJ. MGR.		7/20	
	LEAD ENGR.		7/20	
HORIZONTAL: 1" =	FIELD MGR.		7/20	
VERTICAL 1" =	RECOMMENDED: DESIGN MANAGER			CITY ENGINEER
FILE:	DRAWING:			DATE: 12/30/20
ATLAS PAGE NO: 218, 219, 281, 282				SHEET 106 OF 165 SHEETS

DSN#: XXX PLOTTED BY: $USER$ SCALE: $SCALE$ $DATE$ $TIME$ $FILE$

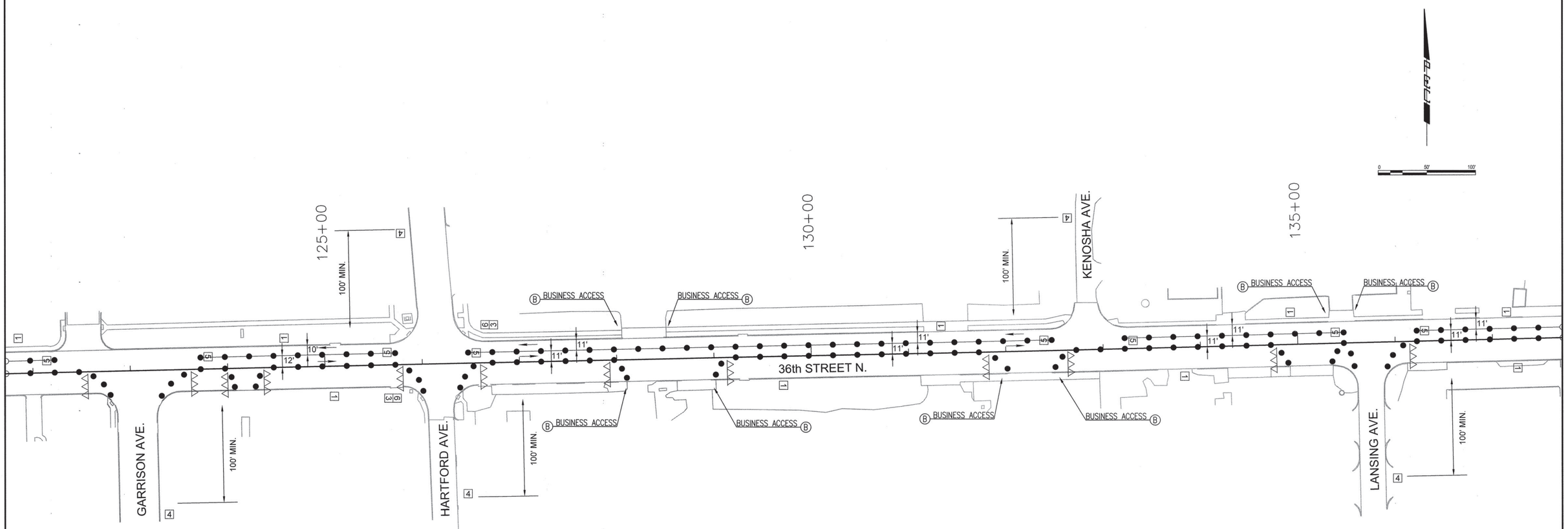

[1] PLACE R2-1 (25) "SPEED LIMIT 25" SIGN

[2] PLACE R2-1 (30) "SPEED LIMIT 30" SIGN

[3] PLACE R3-2 "NO LEFT TURN" SIGN

[4] PLACE CW20-1 "ROAD WORK AHEAD" SIGN

[5] PLACE R4-7A(R) "KEEP RIGHT" SIGN

[6] PLACE R10-6 "STOP HERE ON RED" SIGN

[7] PLACE CW1-4(L) "LEFT REVERSE CURVE" SIGN

[8] PLACE CW1-4(R) "RIGHT REVERSE CURVE" SIGN

[9] PLACE CW20-5(L) "LEFT LANE CLOSED AHEAD" SIGN

[10] PLACE CW20-5(R) "RIGHT LANE CLOSED AHEAD" SIGN

[11] PLACE R3-7(L) "LEFT LANE MUST TURN LEFT" SIGN

[12] PLACE R3-7(R) "RIGHT LANE MUST TURN RIGHT" SIGN

[13] PLACE CG20-2A "END ROAD WORK" SIGN

[14] PLACE W6-3 "TWO WAY TRAFFIC" SIGN

[15] PLACE CW9-2(L) "LANE ENDS MERGE LEFT" SIGN

[16] PLACE CW9-2(R) "LANE ENDS MERGE RIGHT" SIGN

[17] PLACE W12-1 "DOUBLE ARROW" SIGN

LEGEND

- CHANNELIZING DEVICE WITH TYPE "C" LIGHT
- TYPE III BARRICADE WITH TYPE "A" LIGHT
- DIRECTION OF TRAFFIC

NOTE:
1. PHASE 1 - TWO-LANE, TWO-WAY TRAFFIC ON NORTH HALF
2. ACCESS TO RESIDENCE/BUSINESS TO REMAIN OPEN AT ALL TIMES

LICENSED PROFESSIONAL ENGINEER
JASON P. DICKMAN
27639
OKLAHOMA
07/19/2020

TRAFFIC CONTROL PHASE 1–3

PROJECT NO. 144200

ARTERIAL STREET REHABILITATION AND WATERLINE REPLACEMENT – 36TH ST. N. – MLK BLVD TO PEORIA AVE.

CITY OF TULSA, OKLAHOMA
ENGINEERING SERVICES DEPARTMENT

PLANS AND ESTIMATES PREPARED BY: PEC PROFESSIONAL ENGINEERING CONSULTANTS, P.A. 1924 S. UTICA AVE., SUITE 1400 TULSA, OK 74104 918-894-5400 www.pec1.com

REVISION	BY	DATE

PLAN SCALE: 1" = 50'
PROFILE SCALE:
HORIZONTAL: 1" =
VERTICAL 1" =

DRAWN	BFS	01/2020
DESIGNED	JPD	01/2020
SURVEY		
PROJ. MGR.		7/20
LEAD ENGR.		7/20
FIELD MGR.		8/20
RECOMMENDED: DESIGN MANAGER		9.20

APPROVED: CITY ENGINEER

FILE: DRAWING:

DATE: 10/30/20

ATLAS PAGE NO: 218, 219, 281, 282

SHEET 107 OF 165 SHEETS

DSNR: XXX PLOTTED BY: $USER$ SCALE: $SCALE$ $DATE$ $TIME$ $FILE$

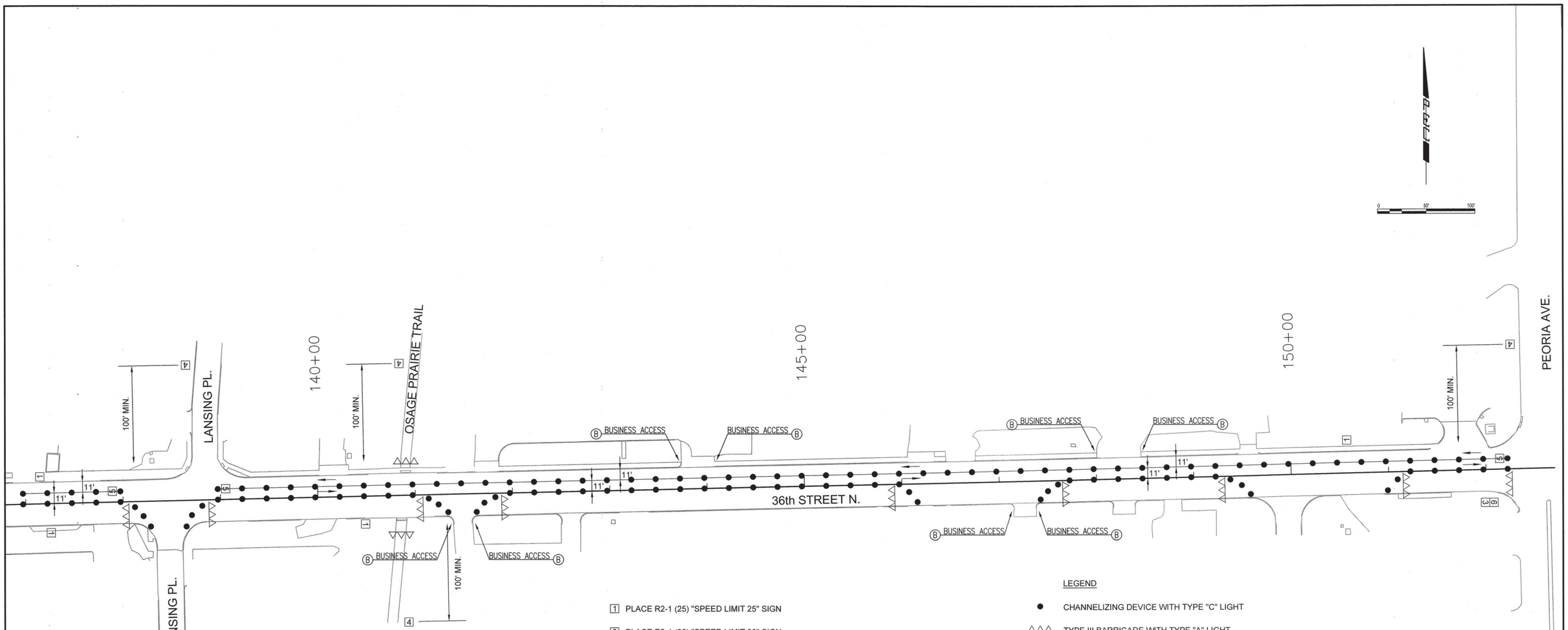

1. PLACE R2-1 (25) "SPEED LIMIT 25" SIGN
2. PLACE R2-1 (30) "SPEED LIMIT 30" SIGN
3. PLACE R3-2 "NO LEFT TURN" SIGN
4. PLACE CW20-1 "ROAD WORK AHEAD" SIGN
5. PLACE R4-7A(R) "KEEP RIGHT" SIGN
6. PLACE R10-6 "STOP HERE ON RED" SIGN
7. PLACE CW1-4(L) "LEFT REVERSE CURVE" SIGN
8. PLACE CW1-4(R) "RIGHT REVERSE CURVE" SIGN
9. PLACE CW20-5(L) "LEFT LANE CLOSED AHEAD" SIGN
10. PLACE CW20-5(R) "RIGHT LANE CLOSED AHEAD" SIGN
11. PLACE R3-7(L) "LEFT LANE MUST TURN LEFT" SIGN
12. PLACE R3-7(R) "RIGHT LANE MUST TURN RIGHT" SIGN
13. PLACE CG20-2A "END ROAD WORK" SIGN
14. PLACE W6-3 "TWO WAY TRAFFIC" SIGN
15. PLACE CW9-2(L) "LANE ENDS MERGE LEFT" SIGN
16. PLACE CW9-2(R) "LANE ENDS MERGE RIGHT" SIGN
17. PLACE W12-1 "DOUBLE ARROW" SIGN

LEGEND

- ● CHANNELIZING DEVICE WITH TYPE "C" LIGHT
- △△△ TYPE III BARRICADE WITH TYPE "A" LIGHT
- ← → DIRECTION OF TRAFFIC

NOTE:
1. PHASE 1 - TWO-LANE, TWO-WAY TRAFFIC ON NORTH HALF
2. ACCESS TO RESIDENCE/BUSINESS TO REMAIN OPEN AT ALL TIMES

LICENSED PROFESSIONAL ENGINEER
JASON P. DICKMAN
27639
OKLAHOMA
07/19/2020

REVISION	BY	DATE

TRAFFIC CONTROL PHASE 1–4

PROJECT NO. 144200

ARTERIAL STREET REHABILITATION AND WATERLINE REPLACEMENT – 36TH ST. N. – MLK BLVD TO PEORIA AVE.

CITY OF TULSA, OKLAHOMA
ENGINEERING SERVICES DEPARTMENT

PLANS AND ESTIMATES PREPARED BY: PEC PROFESSIONAL ENGINEERING CONSULTANTS, P.A. 1924 S. UTICA AVE., SUITE 1400 TULSA, OK 74104 918-664-5400 www.pec1.com

PLAN SCALE: 1" = 50'	DRAWN	BFS	01/2020	APPROVED:
	DESIGNED	JPD	01/2020	
	SURVEY			
PROFILE SCALE:	PROJ. MGR.		7/20	
HORIZONTAL: 1" =	LEAD ENGR.		7/20	
	FIELD MGR.		7/20	
VERTICAL 1" =	RECOMMENDED DESIGN MANAGER		9.20	CITY ENGINEER
FILE:	DRAWING:			DATE: 10/30/20
ATLAS PAGE NO: 218, 219, 281, 282				SHEET 108 OF 165 SHEETS

$TIME$ $DATE$ $SCALE$ $USER$ SCALE: XXX PLOTTED BY: DSNR: $FILE$

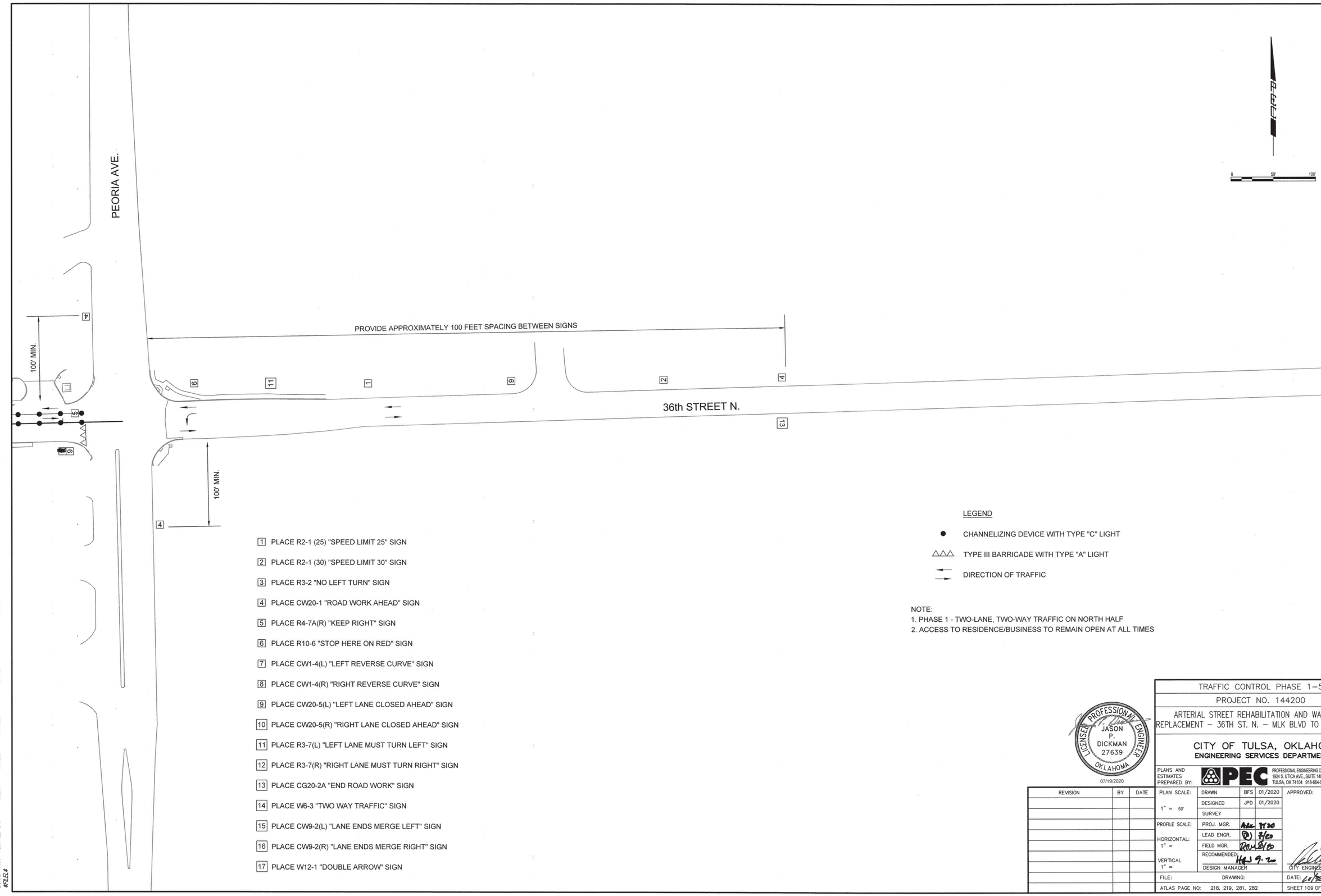

1 PLACE R2-1 (25) "SPEED LIMIT 25" SIGN

2 PLACE R2-1 (30) "SPEED LIMIT 30" SIGN

3 PLACE R3-2 "NO LEFT TURN" SIGN

4 PLACE CW20-1 "ROAD WORK AHEAD" SIGN

5 PLACE R4-7A(R) "KEEP RIGHT" SIGN

6 PLACE R10-6 "STOP HERE ON RED" SIGN

7 PLACE CW1-4(L) "LEFT REVERSE CURVE" SIGN

8 PLACE CW1-4(R) "RIGHT REVERSE CURVE" SIGN

9 PLACE CW20-5(L) "LEFT LANE CLOSED AHEAD" SIGN

10 PLACE CW20-5(R) "RIGHT LANE CLOSED AHEAD" SIGN

11 PLACE R3-7(L) "LEFT LANE MUST TURN LEFT" SIGN

12 PLACE R3-7(R) "RIGHT LANE MUST TURN RIGHT" SIGN

13 PLACE CG20-2A "END ROAD WORK" SIGN

14 PLACE W6-3 "TWO WAY TRAFFIC" SIGN

15 PLACE CW9-2(L) "LANE ENDS MERGE LEFT" SIGN

16 PLACE CW9-2(R) "LANE ENDS MERGE RIGHT" SIGN

17 PLACE W12-1 "DOUBLE ARROW" SIGN

LEGEND

- ● CHANNELIZING DEVICE WITH TYPE "C" LIGHT
- △△△ TYPE III BARRICADE WITH TYPE "A" LIGHT
- ← DIRECTION OF TRAFFIC

NOTE:
1. PHASE 1 - TWO-LANE, TWO-WAY TRAFFIC ON NORTH HALF
2. ACCESS TO RESIDENCE/BUSINESS TO REMAIN OPEN AT ALL TIMES

LICENSED PROFESSIONAL ENGINEER
JASON P. DICKMAN
27639
OKLAHOMA
07/19/2020

REVISION	BY	DATE

TRAFFIC CONTROL PHASE 1–5

PROJECT NO. 144200

ARTERIAL STREET REHABILITATION AND WATERLINE REPLACEMENT – 36TH ST. N. – MLK BLVD TO PEORIA AVE.

CITY OF TULSA, OKLAHOMA
ENGINEERING SERVICES DEPARTMENT

PLANS AND ESTIMATES PREPARED BY: PEC — PROFESSIONAL ENGINEERING CONSULTANTS, P.A. 1924 S. UTICA AVE., SUITE 1400 TULSA, OK 74104 918-664-5400 www.pec1.com

PLAN SCALE: 1" = 50'	DRAWN	BFS	01/2020	APPROVED:
	DESIGNED	JPD	01/2020	
	SURVEY			
PROFILE SCALE:	PROJ. MGR.			
	LEAD ENGR.			
HORIZONTAL: 1" =	FIELD MGR.			
VERTICAL 1" =	RECOMMENDED: DESIGN MANAGER			CITY ENGINEER
FILE:	DRAWING:			DATE:
ATLAS PAGE NO: 218, 219, 281, 282				SHEET 109 OF 165 SHEETS

DSNG: XXX PLOTTED BY: $USER$ SCALE: $SCALE$ $DATE$ $TIME$ $FILE$

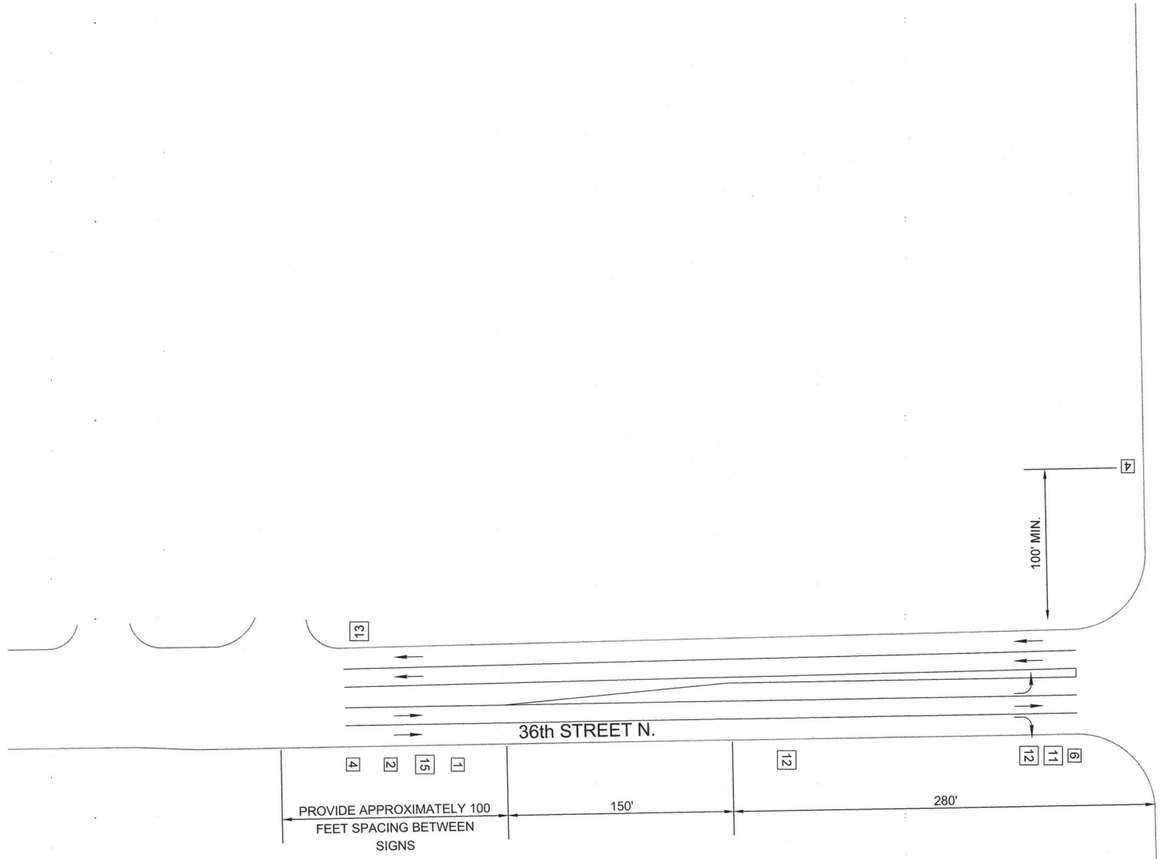

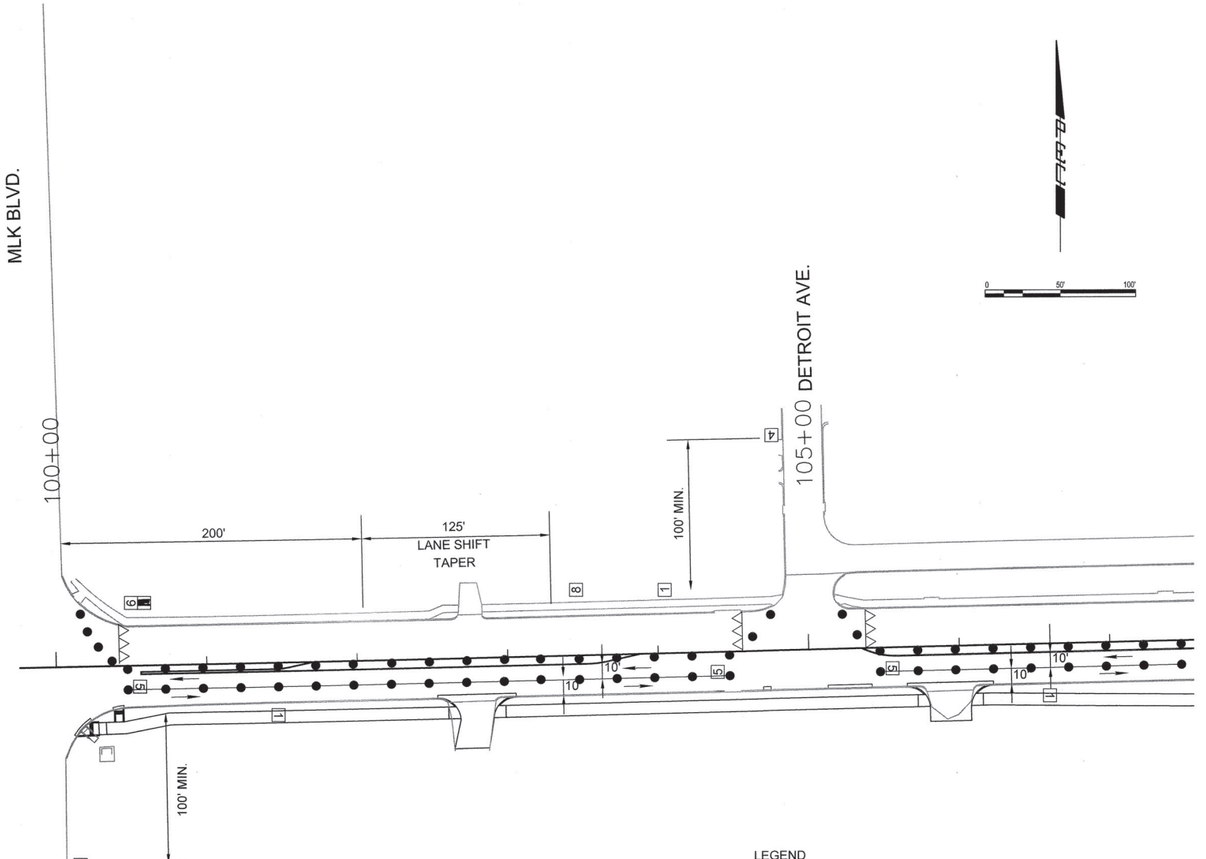

1 PLACE R2-1 (25) "SPEED LIMIT 25" SIGN

2 PLACE R2-1 (30) "SPEED LIMIT 30" SIGN

3 PLACE R3-2 "NO LEFT TURN" SIGN

4 PLACE CW20-1 "ROAD WORK AHEAD" SIGN

5 PLACE R4-7A(R) "KEEP RIGHT" SIGN

6 PLACE R10-6 "STOP HERE ON RED" SIGN

7 PLACE CW1-4(L) "LEFT REVERSE CURVE" SIGN

8 PLACE CW1-4(R) "RIGHT REVERSE CURVE" SIGN

9 PLACE CW20-5(L) "LEFT LANE CLOSED AHEAD" SIGN

10 PLACE CW20-5(R) "RIGHT LANE CLOSED AHEAD" SIGN

11 PLACE R3-7(L) "LEFT LANE MUST TURN LEFT" SIGN

12 PLACE R3-7(R) "RIGHT LANE MUST TURN RIGHT" SIGN

13 PLACE CG20-2A "END ROAD WORK" SIGN

14 PLACE W6-3 "TWO WAY TRAFFIC" SIGN

15 PLACE CW9-2(L) "LANE ENDS MERGE LEFT" SIGN

16 PLACE CW9-2(R) "LANE ENDS MERGE RIGHT" SIGN

17 PLACE W12-1 "DOUBLE ARROW" SIGN

LEGEND

- CHANNELIZING DEVICE WITH TYPE "C" LIGHT
- TYPE III BARRICADE WITH TYPE "A" LIGHT
- DIRECTION OF TRAFFIC

NOTE:
1. PHASE 1 - TWO-LANE, TWO-WAY TRAFFIC ON NORTH HALF
2. ACCESS TO RESIDENCE/BUSINESS TO REMAIN OPEN AT ALL TIMES

LICENSED PROFESSIONAL ENGINEER
JASON P. DICKMAN 27639
OKLAHOMA
07/19/2020

TRAFFIC CONTROL PHASE 2–1

PROJECT NO. 144200

ARTERIAL STREET REHABILITATION AND WATERLINE REPLACEMENT – 36TH ST. N. – MLK BLVD TO PEORIA AVE.

CITY OF TULSA, OKLAHOMA
ENGINEERING SERVICES DEPARTMENT

PLANS AND ESTIMATES PREPARED BY: PEC PROFESSIONAL ENGINEERING CONSULTANTS, P.A. 1924 S. UTICA AVE., SUITE 1400 TULSA, OK 74104 918-664-5400 www.pec1.com

REVISION	BY	DATE

PLAN SCALE: 1" = 50'
PROFILE SCALE:
HORIZONTAL: 1" =
VERTICAL 1" =

DRAWN	BFS	01/2020
DESIGNED	JPD	01/2020
SURVEY		
PROJ. MGR.		
LEAD ENGR.		
FIELD MGR.		
RECOMMENDED: DESIGN MANAGER		

APPROVED: CITY ENGINEER

FILE: DRAWING: DATE:

ATLAS PAGE NO: 218, 219, 281, 282 SHEET 110 OF 165 SHEETS

DSNR: XXX PLOTTED BY: $USER$ SCALE: $SCALE$ $DATE$ $TIME$ $FILE$

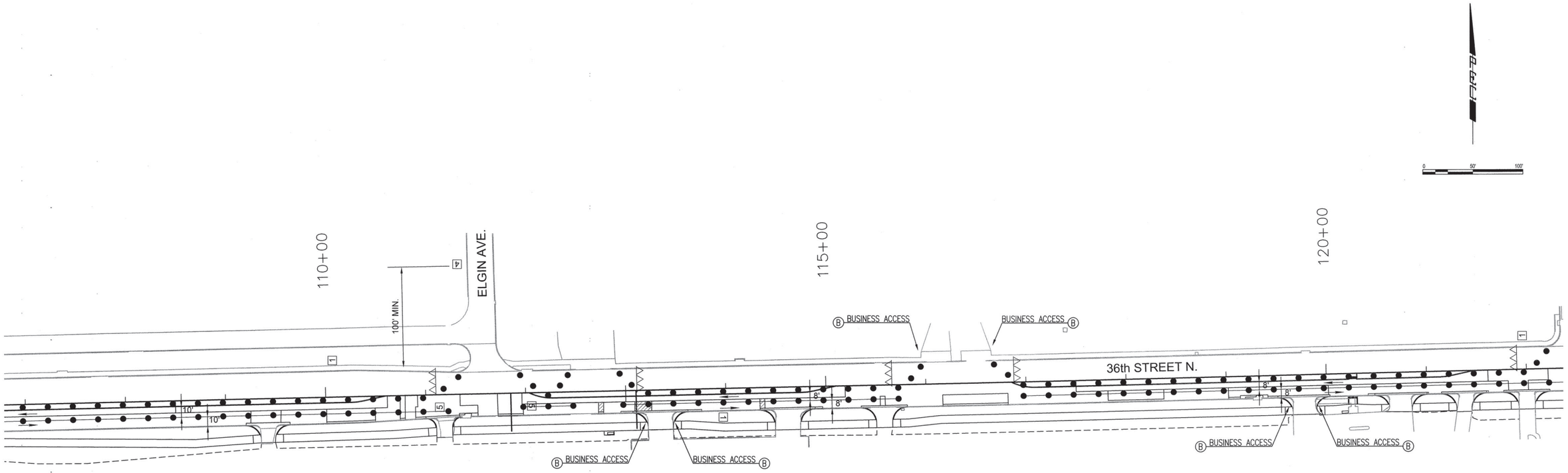

[1] PLACE R2-1 (25) "SPEED LIMIT 25" SIGN

[2] PLACE R2-1 (30) "SPEED LIMIT 30" SIGN

[3] PLACE R3-2 "NO LEFT TURN" SIGN

[4] PLACE CW20-1 "ROAD WORK AHEAD" SIGN

[5] PLACE R4-7A(R) "KEEP RIGHT" SIGN

[6] PLACE R10-6 "STOP HERE ON RED" SIGN

[7] PLACE CW1-4(L) "LEFT REVERSE CURVE" SIGN

[8] PLACE CW1-4(R) "RIGHT REVERSE CURVE" SIGN

[9] PLACE CW20-5(L) "LEFT LANE CLOSED AHEAD" SIGN

[10] PLACE CW20-5(R) "RIGHT LANE CLOSED AHEAD" SIGN

[11] PLACE R3-7(L) "LEFT LANE MUST TURN LEFT" SIGN

[12] PLACE R3-7(R) "RIGHT LANE MUST TURN RIGHT" SIGN

[13] PLACE CG20-2A "END ROAD WORK" SIGN

[14] PLACE W6-3 "TWO WAY TRAFFIC" SIGN

[15] PLACE CW9-2(L) "LANE ENDS MERGE LEFT" SIGN

[16] PLACE CW9-2(R) "LANE ENDS MERGE RIGHT" SIGN

[17] PLACE W12-1 "DOUBLE ARROW" SIGN

LEGEND

- ● CHANNELIZING DEVICE WITH TYPE "C" LIGHT
- △△△ TYPE III BARRICADE WITH TYPE "A" LIGHT
- ←→ DIRECTION OF TRAFFIC

NOTE:
1. PHASE 1 - TWO-LANE, TWO-WAY TRAFFIC ON NORTH HALF
2. ACCESS TO RESIDENCE/BUSINESS TO REMAIN OPEN AT ALL TIMES

LICENSED PROFESSIONAL ENGINEER
JASON P. DICKMAN
27639
OKLAHOMA
07/19/2020

REVISION	BY	DATE

TRAFFIC CONTROL PHASE 2-2

PROJECT NO. 144200

ARTERIAL STREET REHABILITATION AND WATERLINE REPLACEMENT – 36TH ST. N. – MLK BLVD TO PEORIA AVE.

CITY OF TULSA, OKLAHOMA
ENGINEERING SERVICES DEPARTMENT

PLANS AND ESTIMATES PREPARED BY: PEC — PROFESSIONAL ENGINEERING CONSULTANTS, P.A. 1924 S. UTICA AVE., SUITE 1400 TULSA, OK 74104 918-664-5400 www.pec1.com

PLAN SCALE: 1" = 50'	DRAWN	BFS	01/2020	APPROVED:
	DESIGNED	JPD	01/2020	
	SURVEY			
PROFILE SCALE:	PROJ. MGR.		7/20	
	LEAD ENGR.		7/20	
HORIZONTAL: 1" =	FIELD MGR.		7/20	
VERTICAL 1" =	RECOMMENDED DESIGN MANAGER		7.20	CITY ENGINEER
FILE:	DRAWING:			DATE: 10/30/20
ATLAS PAGE NO: 218, 219, 281, 282				SHEET 111 OF 165 SHEETS

DSNR: XXX PLOTTED BY: $FILE$ $USER$ SCALE: $SCALE$ $DATE$ $TIME$

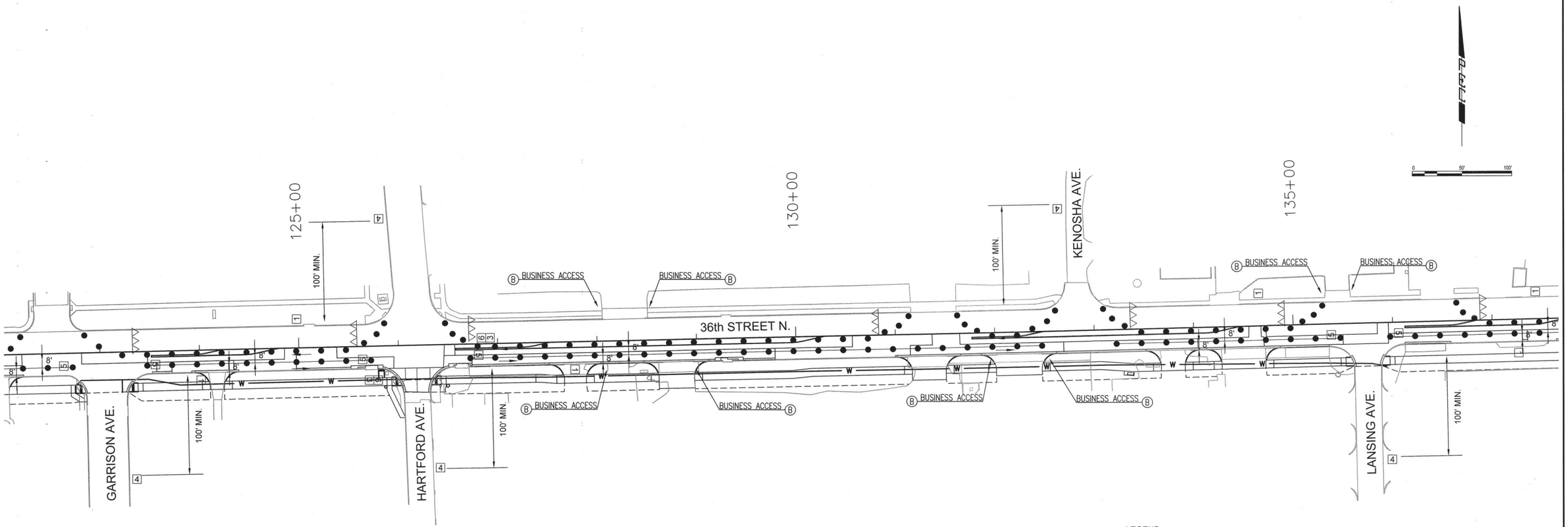

1 PLACE R2-1 (25) "SPEED LIMIT 25" SIGN

2 PLACE R2-1 (30) "SPEED LIMIT 30" SIGN

3 PLACE R3-2 "NO LEFT TURN" SIGN

4 PLACE CW20-1 "ROAD WORK AHEAD" SIGN

5 PLACE R4-7A(R) "KEEP RIGHT" SIGN

6 PLACE R10-6 "STOP HERE ON RED" SIGN

7 PLACE CW1-4(L) "LEFT REVERSE CURVE" SIGN

8 PLACE CW1-4(R) "RIGHT REVERSE CURVE" SIGN

9 PLACE CW20-5(L) "LEFT LANE CLOSED AHEAD" SIGN

10 PLACE CW20-5(R) "RIGHT LANE CLOSED AHEAD" SIGN

11 PLACE R3-7(L) "LEFT LANE MUST TURN LEFT" SIGN

12 PLACE R3-7(R) "RIGHT LANE MUST TURN RIGHT" SIGN

13 PLACE CG20-2A "END ROAD WORK" SIGN

14 PLACE W6-3 "TWO WAY TRAFFIC" SIGN

15 PLACE CW9-2(L) "LANE ENDS MERGE LEFT" SIGN

16 PLACE CW9-2(R) "LANE ENDS MERGE RIGHT" SIGN

17 PLACE W12-1 "DOUBLE ARROW" SIGN

LEGEND

- ● CHANNELIZING DEVICE WITH TYPE "C" LIGHT
- △△△ TYPE III BARRICADE WITH TYPE "A" LIGHT
- ←→ DIRECTION OF TRAFFIC

NOTE:
1. PHASE 1 - TWO-LANE, TWO-WAY TRAFFIC ON NORTH HALF
2. ACCESS TO RESIDENCE/BUSINESS TO REMAIN OPEN AT ALL TIMES

LICENSED PROFESSIONAL ENGINEER
JASON P. DICKMAN
27639
OKLAHOMA
07/19/2020

REVISION	BY	DATE

TRAFFIC CONTROL PHASE 2-3

PROJECT NO. 144200

ARTERIAL STREET REHABILITATION AND WATERLINE REPLACEMENT – 36TH ST. N. – MLK BLVD TO PEORIA AVE.

CITY OF TULSA, OKLAHOMA
ENGINEERING SERVICES DEPARTMENT

PLANS AND ESTIMATES PREPARED BY: PEC PROFESSIONAL ENGINEERING CONSULTANTS, P.A. 1504 S. UTICA AVE., SUITE 1400 TULSA, OK 74104 918-664-5400 www.pec1.com

PLAN SCALE: 1" = 50'	DRAWN	BFS	01/2020	APPROVED:
	DESIGNED	JPD	01/2020	
	SURVEY			
PROFILE SCALE:	PROJ. MGR.		7/20	
HORIZONTAL: 1" =	LEAD ENGR.		7/20	
	FIELD MGR.		8/20	
VERTICAL 1" =	RECOMMENDED: DESIGN MANAGER		9.20	CITY ENGINEER
FILE:	DRAWING:			DATE: 10/30/20
ATLAS PAGE NO: 218, 219, 281, 282				SHEET 112 OF 165 SHEETS

DSN#: XXX PLOTTED BY: $USER# SCALE: $SCALE# $DATE# $TIME$ $FILE$

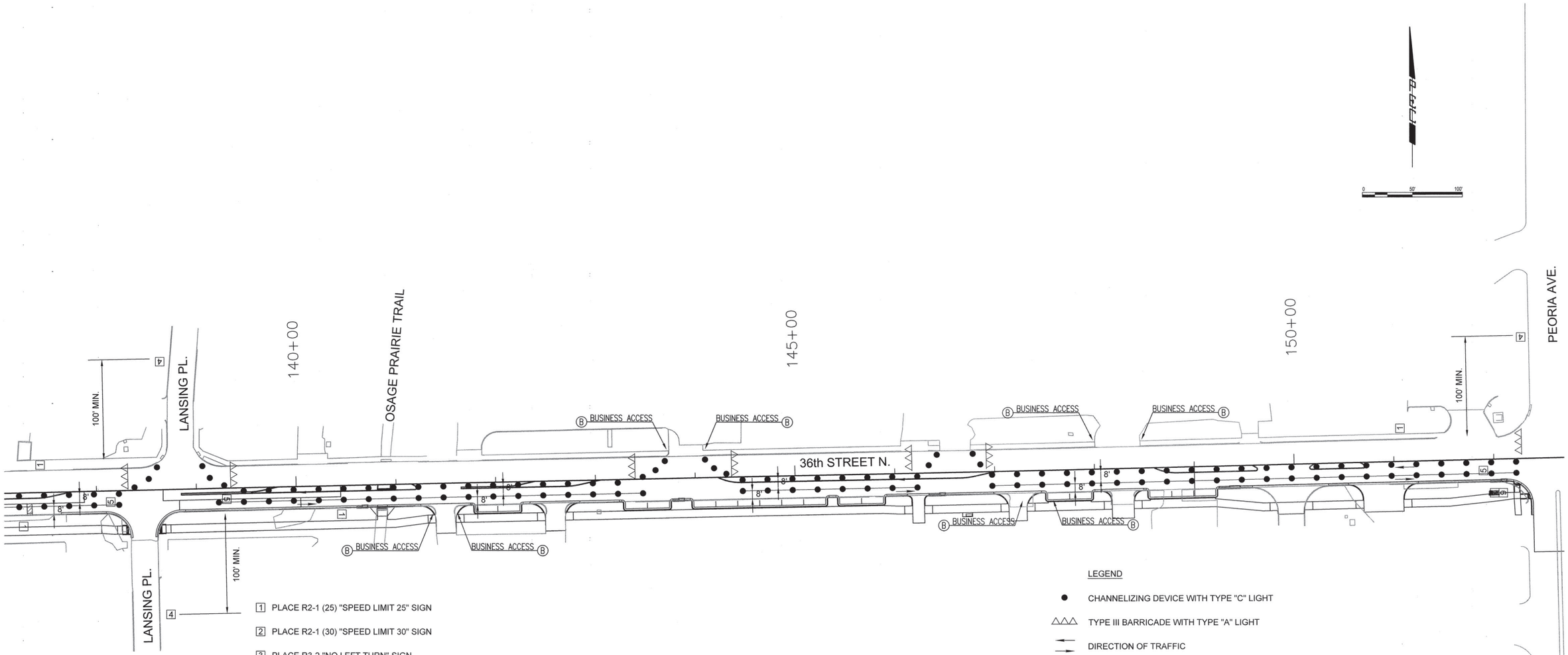

1. PLACE R2-1 (25) "SPEED LIMIT 25" SIGN
2. PLACE R2-1 (30) "SPEED LIMIT 30" SIGN
3. PLACE R3-2 "NO LEFT TURN" SIGN
4. PLACE CW20-1 "ROAD WORK AHEAD" SIGN
5. PLACE R4-7A(R) "KEEP RIGHT" SIGN
6. PLACE R10-6 "STOP HERE ON RED" SIGN
7. PLACE CW1-4(L) "LEFT REVERSE CURVE" SIGN
8. PLACE CW1-4(R) "RIGHT REVERSE CURVE" SIGN
9. PLACE CW20-5(L) "LEFT LANE CLOSED AHEAD" SIGN
10. PLACE CW20-5(R) "RIGHT LANE CLOSED AHEAD" SIGN
11. PLACE R3-7(L) "LEFT LANE MUST TURN LEFT" SIGN
12. PLACE R3-7(R) "RIGHT LANE MUST TURN RIGHT" SIGN
13. PLACE CG20-2A "END ROAD WORK" SIGN
14. PLACE W6-3 "TWO WAY TRAFFIC" SIGN
15. PLACE CW9-2(L) "LANE ENDS MERGE LEFT" SIGN
16. PLACE CW9-2(R) "LANE ENDS MERGE RIGHT" SIGN
17. PLACE W12-1 "DOUBLE ARROW" SIGN

LEGEND

- ● CHANNELIZING DEVICE WITH TYPE "C" LIGHT
- △△△ TYPE III BARRICADE WITH TYPE "A" LIGHT
- ←→ DIRECTION OF TRAFFIC

NOTE:
1. PHASE 1 - TWO-LANE, TWO-WAY TRAFFIC ON NORTH HALF
2. ACCESS TO RESIDENCE/BUSINESS TO REMAIN OPEN AT ALL TIMES

LICENSED PROFESSIONAL ENGINEER
JASON P. DICKMAN
27639
OKLAHOMA
07/19/2020

TRAFFIC CONTROL PHASE 2–4

PROJECT NO. 144200

ARTERIAL STREET REHABILITATION AND WATERLINE REPLACEMENT – 36TH ST. N. – MLK BLVD TO PEORIA AVE.

CITY OF TULSA, OKLAHOMA
ENGINEERING SERVICES DEPARTMENT

PLANS AND ESTIMATES PREPARED BY: PEC PROFESSIONAL ENGINEERING CONSULTANTS, P.A. 1924 S. UTICA AVE., SUITE 1400 TULSA, OK 74104 918-664-5400 www.pec1.com

REVISION	BY	DATE

PLAN SCALE: 1" = 50'	DRAWN	BFS	01/2020	APPROVED:
	DESIGNED	JPD	01/2020	
	SURVEY			
PROFILE SCALE:	PROJ. MGR.		9/20	
HORIZONTAL: 1" =	LEAD ENGR.		7/20	
	FIELD MGR.		8/20	
VERTICAL 1" =	RECOMMENDED: DESIGN MANAGER		9-20	CITY ENGINEER
FILE:	DRAWING:			DATE: 10/30/20
ATLAS PAGE NO: 218, 219, 281, 282				SHEET 113 OF 165 SHEETS

$TIME$ $DATE$ $SCALE$ SCALE: $USER$ PLOTTED BY: XXX DSNR: $FILE$

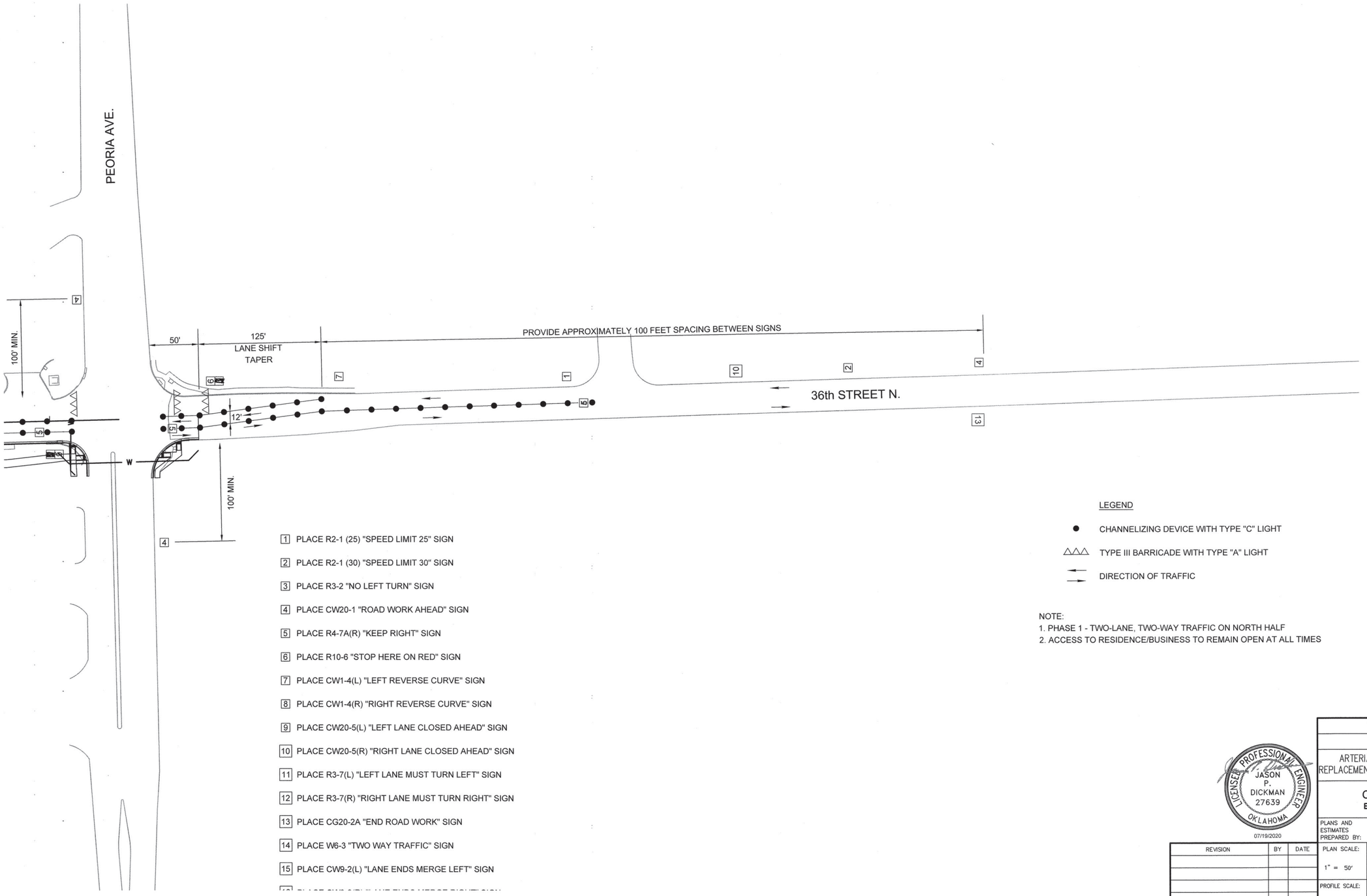

1. PLACE R2-1 (25) "SPEED LIMIT 25" SIGN
2. PLACE R2-1 (30) "SPEED LIMIT 30" SIGN
3. PLACE R3-2 "NO LEFT TURN" SIGN
4. PLACE CW20-1 "ROAD WORK AHEAD" SIGN
5. PLACE R4-7A(R) "KEEP RIGHT" SIGN
6. PLACE R10-6 "STOP HERE ON RED" SIGN
7. PLACE CW1-4(L) "LEFT REVERSE CURVE" SIGN
8. PLACE CW1-4(R) "RIGHT REVERSE CURVE" SIGN
9. PLACE CW20-5(L) "LEFT LANE CLOSED AHEAD" SIGN
10. PLACE CW20-5(R) "RIGHT LANE CLOSED AHEAD" SIGN
11. PLACE R3-7(L) "LEFT LANE MUST TURN LEFT" SIGN
12. PLACE R3-7(R) "RIGHT LANE MUST TURN RIGHT" SIGN
13. PLACE CG20-2A "END ROAD WORK" SIGN
14. PLACE W6-3 "TWO WAY TRAFFIC" SIGN
15. PLACE CW9-2(L) "LANE ENDS MERGE LEFT" SIGN

LEGEND

- ● CHANNELIZING DEVICE WITH TYPE "C" LIGHT
- △△△ TYPE III BARRICADE WITH TYPE "A" LIGHT
- ←→ DIRECTION OF TRAFFIC

NOTE:
1. PHASE 1 - TWO-LANE, TWO-WAY TRAFFIC ON NORTH HALF
2. ACCESS TO RESIDENCE/BUSINESS TO REMAIN OPEN AT ALL TIMES

LICENSED PROFESSIONAL ENGINEER
JASON P. DICKMAN 27639
OKLAHOMA
07/19/2020

TRAFFIC CONTROL PHASE 2–5

PROJECT NO. 144200

ARTERIAL STREET REHABILITATION AND WATERLINE REPLACEMENT – 36TH ST. N. – MLK BLVD TO PEORIA AVE.

CITY OF TULSA, OKLAHOMA
ENGINEERING SERVICES DEPARTMENT

PLANS AND ESTIMATES PREPARED BY: PEC — PROFESSIONAL ENGINEERING CONSULTANTS, P.A. 1924 S. UTICA AVE., SUITE 1400 TULSA, OK 74104 918-664-5400 www.pec1.com

REVISION	BY	DATE

PLAN SCALE: 1" = 50'
PROFILE SCALE:
HORIZONTAL: 1" =
VERTICAL 1" =

DRAWN	BFS	01/2020	APPROVED:
DESIGNED	JPD	01/2020	
SURVEY			
PROJ. MGR.		7/20	
LEAD ENGR.		7/20	
FIELD MGR.		8/20	
RECOMMENDED: DESIGN MANAGER	HBS	9-20	CITY ENGINEER

FILE: DRAWING: DATE: 10/30/20

ATLAS PAGE NO: 218, 219, 281, 282 SHEET 114 OF 165 SHEETS

DGN: XXX PLOTTED BY: $USER$ SCALE: $SCALE$ $DATE$ $TIME$ $FILE$

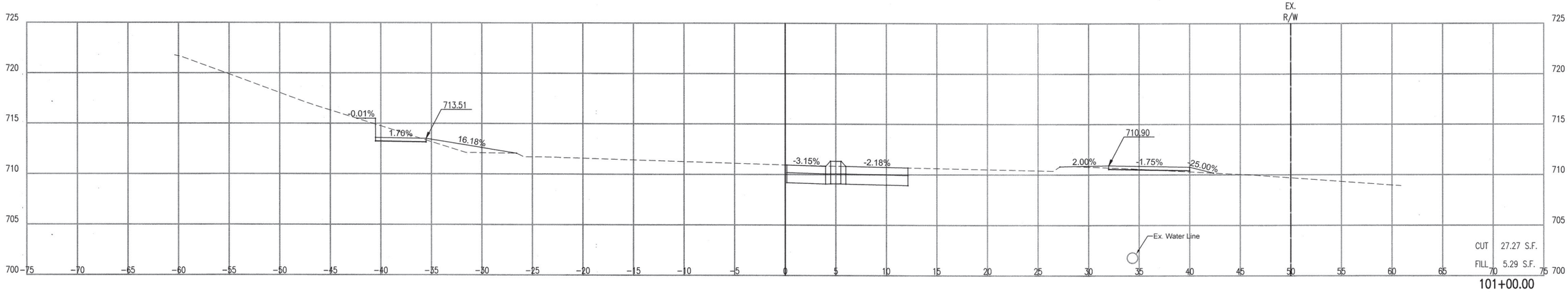

101+00.00

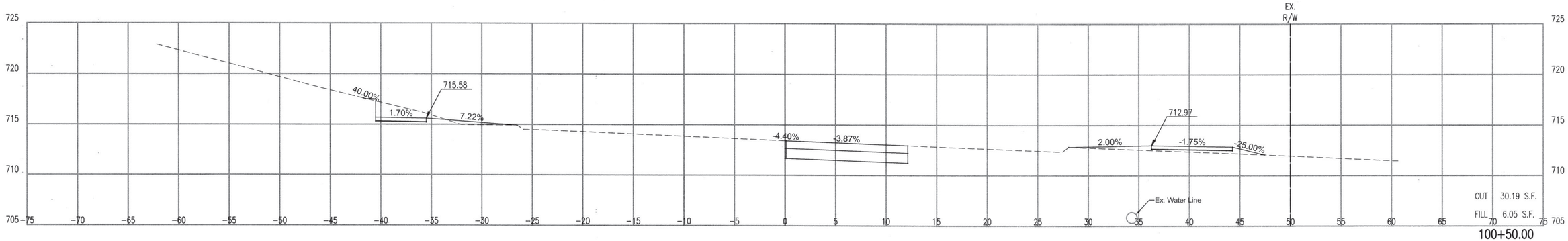

100+50.00

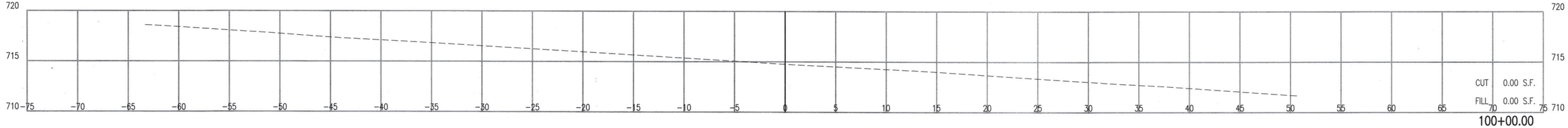

100+00.00

LICENSED PROFESSIONAL ENGINEER
JASON P. DICKMAN 27639
OKLAHOMA
07/19/2020

REVISION	BY	DATE

CROSS SECTIONS – 100+00.00 TO 101+00.00

PROJECT NO. 144200

ARTERIAL STREET REHABILITATION AND WATERLINE REPLACEMENT – 36TH ST. N. – MLK BLVD TO PEORIA AVE.

CITY OF TULSA, OKLAHOMA
ENGINEERING SERVICES DEPARTMENT

PLANS AND ESTIMATES PREPARED BY: PEC — PROFESSIONAL ENGINEERING CONSULTANTS, P.A. 1924 S. UTICA AVE., SUITE 1400 TULSA, OK 74104 918-664-5400 www.pec1.com

PLAN SCALE: 1" =	DRAWN	BFS	01/2020	APPROVED:
	DESIGNED	JPD	01/2020	
	SURVEY			
PROFILE SCALE:	PROJ. MGR.			
HORIZONTAL: 1" = 5'	LEAD ENGR.			
	FIELD MGR.			
VERTICAL 1" = 5'	RECOMMENDED: DESIGN MANAGER			CITY ENGINEER
FILE:	DRAWING:			DATE:
ATLAS PAGE NO: 218, 219, 281, 282				SHEET 115 OF 165 SHEETS

$TIME$ $DATE$ $SCALE$ $USER$ SCALE: DSNR: XXX PLOTTED BY: $FILEL$

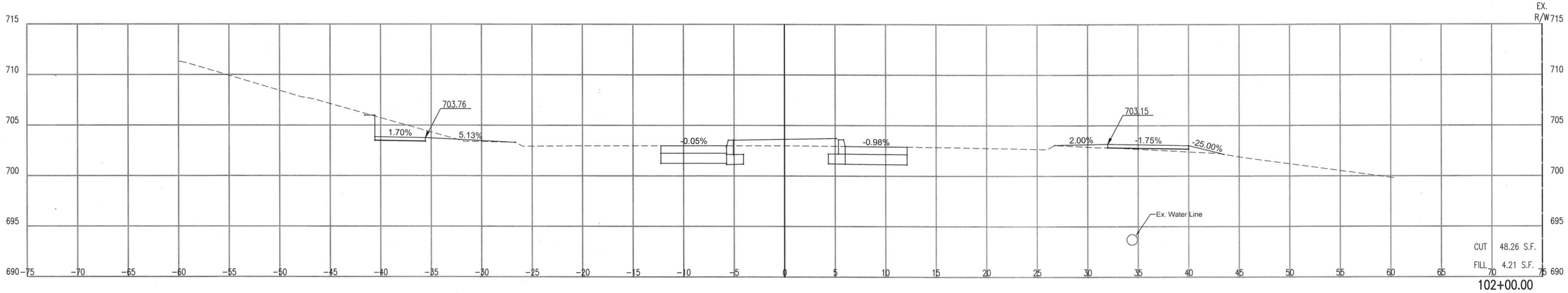

102+00.00

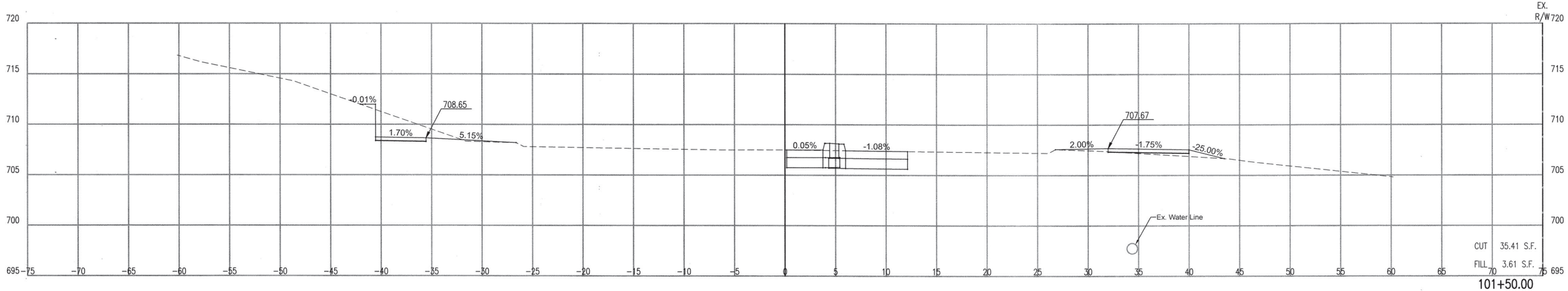

101+50.00

CROSS SECTIONS – 101+50.00 TO 102+00.00

PROJECT NO. 144200

ARTERIAL STREET REHABILITATION AND WATERLINE REPLACEMENT – 36TH ST. N. – MLK BLVD TO PEORIA AVE.

CITY OF TULSA, OKLAHOMA
ENGINEERING SERVICES DEPARTMENT

LICENSED PROFESSIONAL ENGINEER
JASON P. DICKMAN
27639
OKLAHOMA
07/19/2020

PLANS AND ESTIMATES PREPARED BY:

PEC PROFESSIONAL ENGINEERING CONSULTANTS, P.A.
1924 S. UTICA AVE., SUITE 1400
TULSA, OK 74104 918-664-5400 www.pec1.com

REVISION	BY	DATE

PLAN SCALE: 1" =	DRAWN	BFS	01/2020
	DESIGNED	JPD	01/2020
	SURVEY		
PROFILE SCALE:	PROJ. MGR.		
HORIZONTAL: 1" = 5'	LEAD ENGR.		
	FIELD MGR.		
VERTICAL 1" = 5'	RECOMMENDED: DESIGN MANAGER		

APPROVED: CITY ENGINEER

FILE: DRAWING: DATE:

ATLAS PAGE NO: 218, 219, 281, 282

SHEET 116 OF 165 SHEETS

DSNR: XXX PLOTTED BY: $FILE$ $USER$ SCALE: $SCALE$ $DATE$ $TIME$

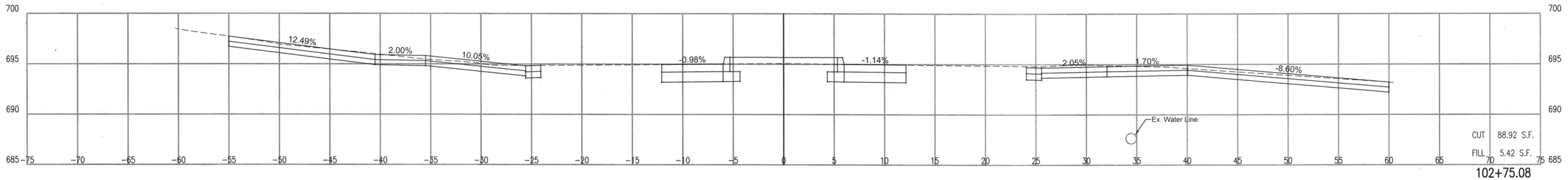

102+75.08

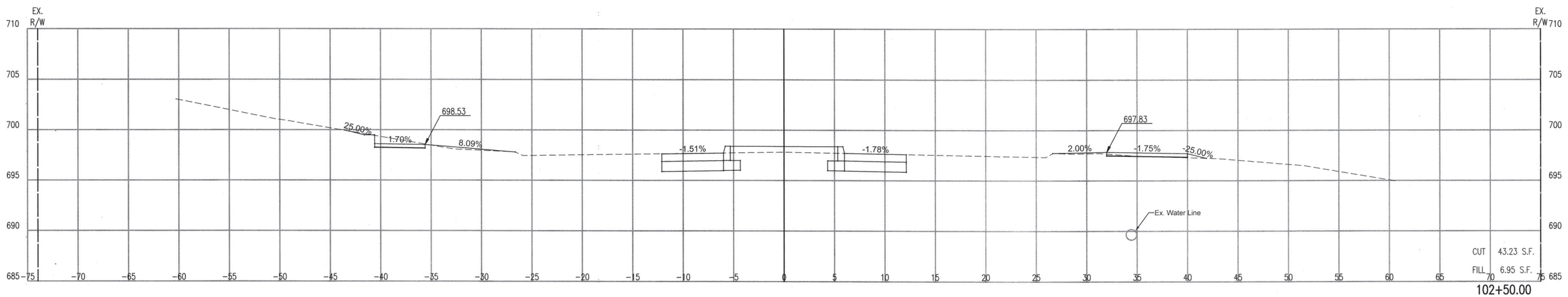

102+50.00

CROSS SECTIONS – 102+50.00 TO 102+75.08

PROJECT NO. 144200

ARTERIAL STREET REHABILITATION AND WATERLINE REPLACEMENT – 36TH ST. N. – MLK BLVD TO PEORIA AVE.

CITY OF TULSA, OKLAHOMA
ENGINEERING SERVICES DEPARTMENT

LICENSED PROFESSIONAL ENGINEER
JASON P. DICKMAN
27639
OKLAHOMA
07/19/2020

PLANS AND ESTIMATES PREPARED BY:

PEC PROFESSIONAL ENGINEERING CONSULTANTS, P.A.
1924 S. UTICA AVE., SUITE 1400
TULSA, OK 74104 918-664-5400 www.pec1.com

REVISION	BY	DATE

PLAN SCALE: 1" =	DRAWN	BFS	01/2020
	DESIGNED	JPD	01/2020
	SURVEY		
PROFILE SCALE:	PROJ. MGR.		
HORIZONTAL: 1" = 5'	LEAD ENGR.		
	FIELD MGR.		
VERTICAL 1" = 5'	RECOMMENDED: DESIGN MANAGER		

APPROVED: CITY ENGINEER

FILE: DRAWING: DATE:

ATLAS PAGE NO: 218, 219, 281, 282

SHEET 117 OF 165 SHEETS

DSNR: XXX PLOTTED BY: $USER$ SCALE: $SCALE$ $DATE$ $TIME$ $FILE$

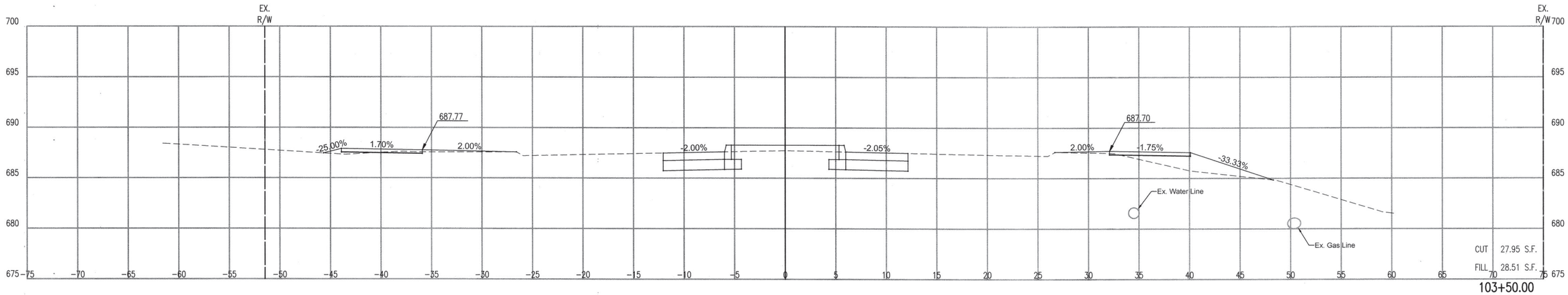

103+50.00

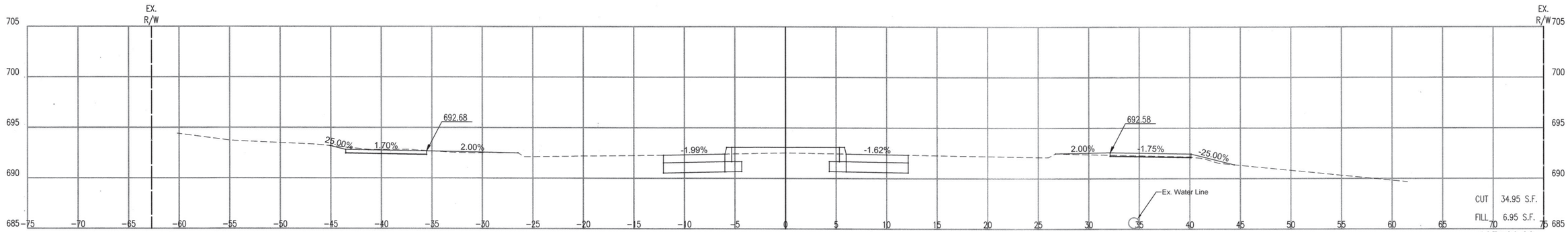

103+00.00

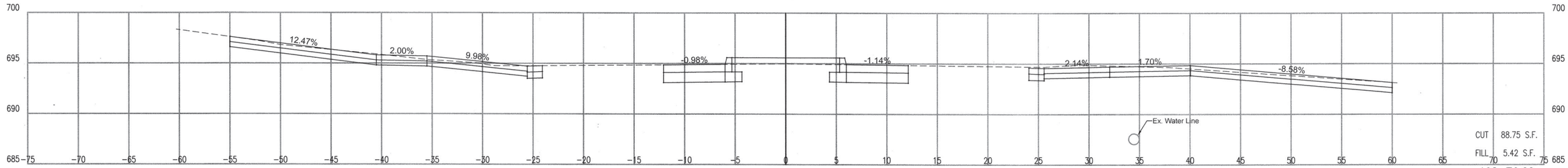

102+76.02

$TIME$ $DATE$ $SCALE$ SCALE: $USER$ PLOTTED BY: XXX DSNR: $FILE$

JASON P. DICKMAN 27639 LICENSED PROFESSIONAL ENGINEER OKLAHOMA

07/19/2020

REVISION	BY	DATE

CROSS SECTIONS – 102+76.02 TO 103+50.00

PROJECT NO. 144200

ARTERIAL STREET REHABILITATION AND WATERLINE REPLACEMENT – 36TH ST. N. – MLK BLVD TO PEORIA AVE.

CITY OF TULSA, OKLAHOMA
ENGINEERING SERVICES DEPARTMENT

PLANS AND ESTIMATES PREPARED BY: PEC PROFESSIONAL ENGINEERING CONSULTANTS, P.A. 1924 S. UTICA AVE., SUITE 1400 TULSA, OK 74104 918-664-5400 www.pec1.com

PLAN SCALE: 1" =	DRAWN	BFS	01/2020	APPROVED:
	DESIGNED	JPD	01/2020	
	SURVEY			
PROFILE SCALE:	PROJ. MGR.			
HORIZONTAL: 1" = 5'	LEAD ENGR.			
	FIELD MGR.			
VERTICAL 1" = 5'	RECOMMENDED: DESIGN MANAGER			CITY ENGINEER
FILE:	DRAWING:			DATE:
ATLAS PAGE NO: 218, 219, 281, 282				SHEET 118 OF 165 SHEETS

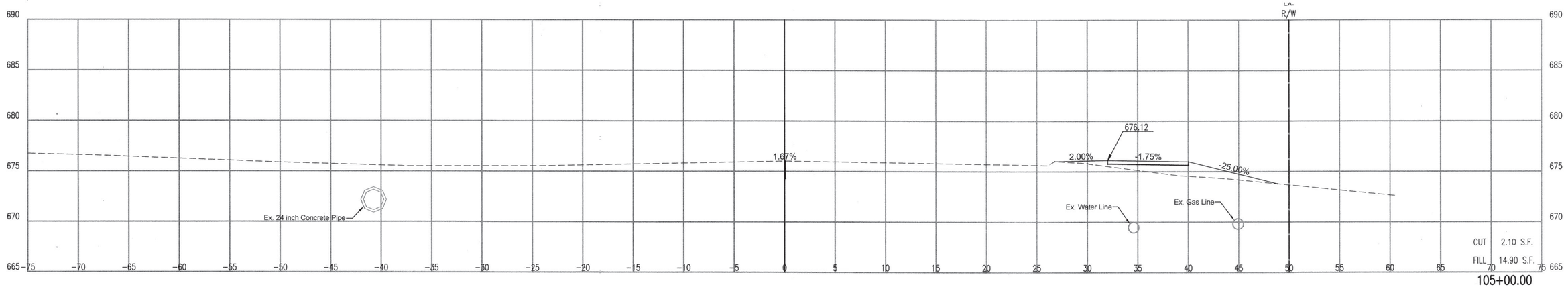

105+00.00

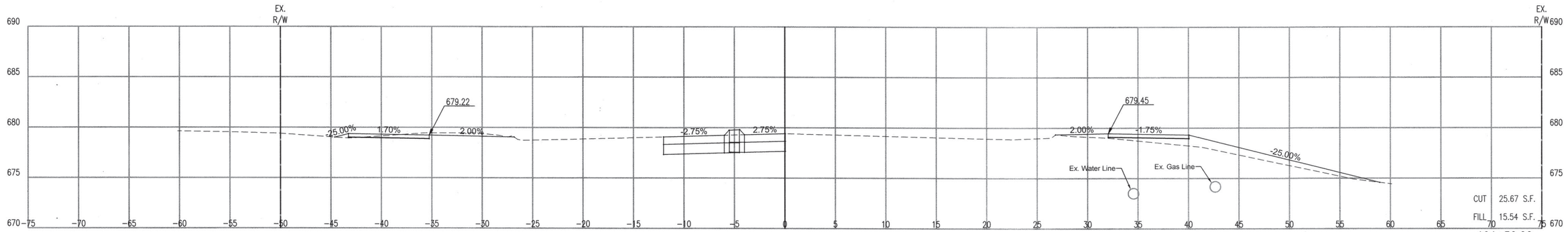

104+50.00

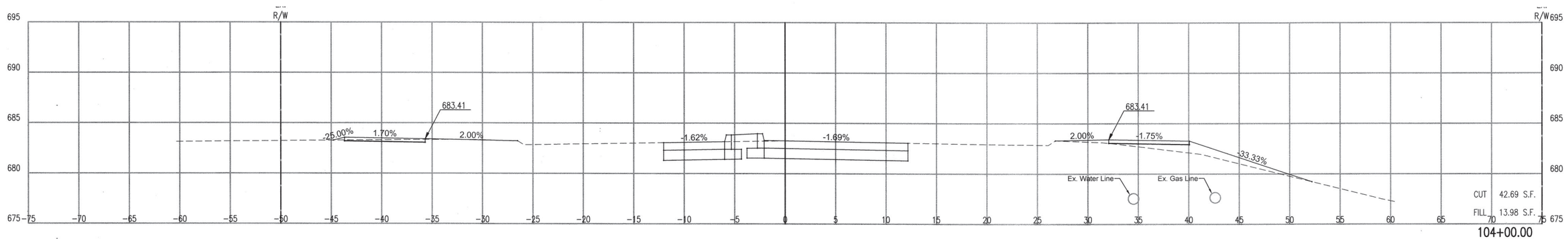

104+00.00

CROSS SECTIONS – 104+00.00 TO 105+00.00

PROJECT NO. 144200

ARTERIAL STREET REHABILITATION AND WATERLINE REPLACEMENT – 36TH ST. N. – MLK BLVD TO PEORIA AVE.

CITY OF TULSA, OKLAHOMA
ENGINEERING SERVICES DEPARTMENT

LICENSED PROFESSIONAL ENGINEER
JASON P. DICKMAN
27639
OKLAHOMA
07/19/2020

PLANS AND ESTIMATES PREPARED BY:

PEC PROFESSIONAL ENGINEERING CONSULTANTS, P.A.
1924 S. UTICA AVE., SUITE 1400
TULSA, OK 74104 918-664-5400 www.pec1.com

REVISION	BY	DATE

PLAN SCALE: 1" =	DRAWN	BFS	01/2020	APPROVED:
	DESIGNED	JPD	01/2020	
	SURVEY			
PROFILE SCALE:	PROJ. MGR.			
HORIZONTAL: 1" = 5'	LEAD ENGR.			
	FIELD MGR.			
VERTICAL 1" = 5'	RECOMMENDED: DESIGN MANAGER			CITY ENGINEER
FILE:	DRAWING:			DATE:
ATLAS PAGE NO: 218, 219, 281, 282				SHEET 119 OF 165 SHEETS

DSNG: XXX PLOTTED BY: $USER$ SCALE: $SCALE$ $DATE$ $TIME$ $FILE$

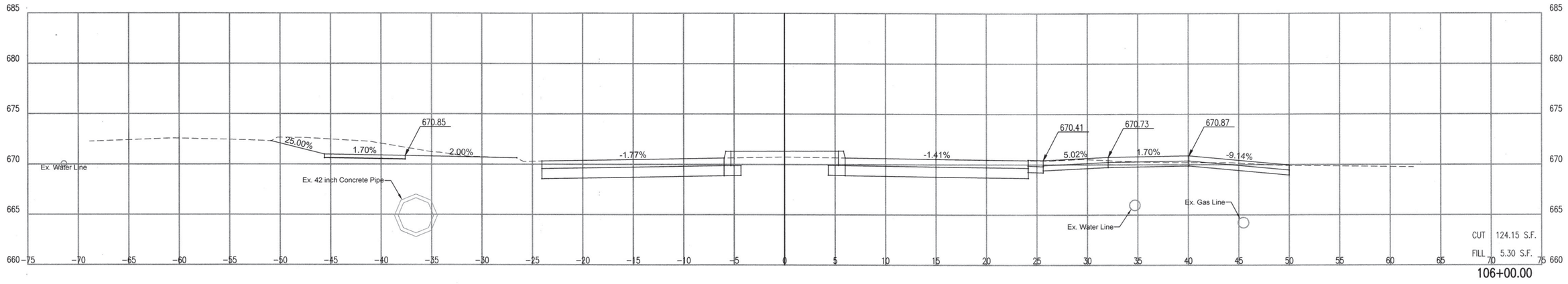

106+00.00

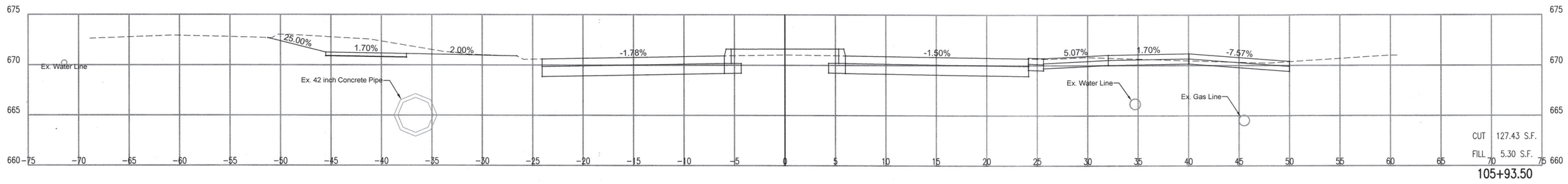

105+93.50

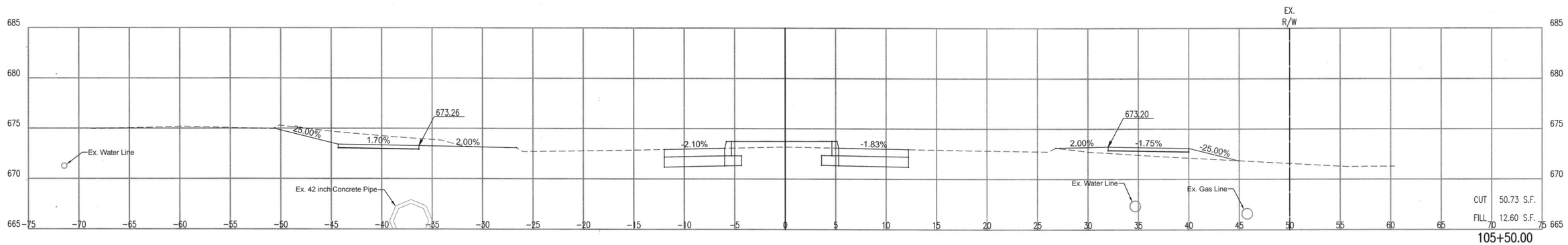

105+50.00

EX.

LICENSED PROFESSIONAL ENGINEER
JASON P. DICKMAN
27639
OKLAHOMA
07/19/2020

REVISION	BY	DATE

CROSS SECTIONS – 105+50.00 TO 106+00.00

PROJECT NO. 144200

ARTERIAL STREET REHABILITATION AND WATERLINE REPLACEMENT – 36TH ST. N. – MLK BLVD TO PEORIA AVE.

CITY OF TULSA, OKLAHOMA
ENGINEERING SERVICES DEPARTMENT

PLANS AND ESTIMATES PREPARED BY: PEC — PROFESSIONAL ENGINEERING CONSULTANTS, P.A. 1924 S. UTICA AVE., SUITE 1400 TULSA, OK 74104 918-664-5400 www.pec1.com

PLAN SCALE: 1" =	DRAWN	BFS	01/2020	APPROVED:
	DESIGNED	JPD	01/2020	
	SURVEY			
PROFILE SCALE:	PROJ. MGR.			
HORIZONTAL: 1" = 5'	LEAD ENGR.			
	FIELD MGR.			
VERTICAL 1" = 5'	RECOMMENDED: DESIGN MANAGER			CITY ENGINEER
FILE:	DRAWING:			DATE:
ATLAS PAGE NO: 218, 219, 281, 282				SHEET 120 OF 165 SHEETS

DSNR: XXX PLOTTED BY: $USER$ SCALE: $SCALE$ $DATE$ $TIME$ $FILE$

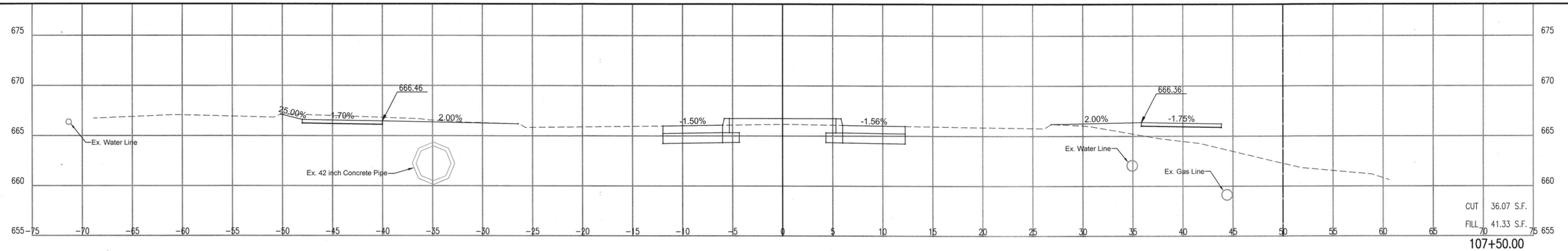

107+50.00

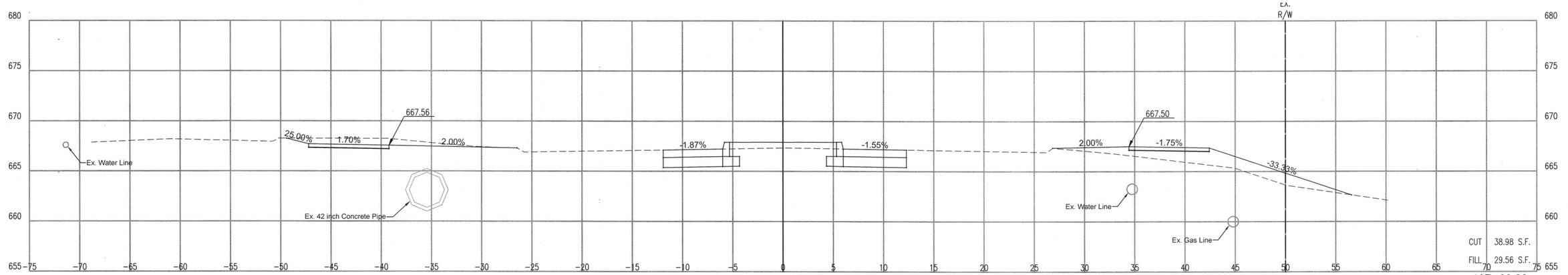

107+00.00

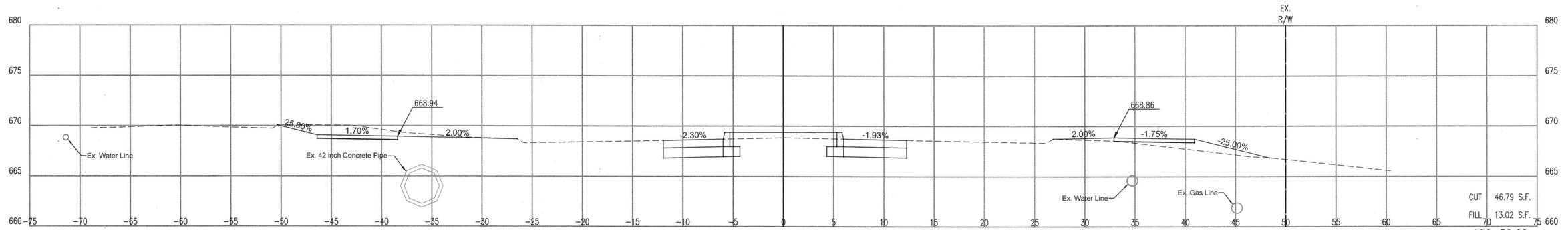

106+50.00

CROSS SECTIONS – 106+50.00 TO 107+50.00

PROJECT NO. 144200

ARTERIAL STREET REHABILITATION AND WATERLINE REPLACEMENT – 36TH ST. N. – MLK BLVD TO PEORIA AVE.

CITY OF TULSA, OKLAHOMA
ENGINEERING SERVICES DEPARTMENT

LICENSED PROFESSIONAL ENGINEER
JASON P. DICKMAN
27639
OKLAHOMA
07/19/2020

PLANS AND ESTIMATES PREPARED BY: PEC PROFESSIONAL ENGINEERING CONSULTANTS, P.A.
1924 S. UTICA AVE., SUITE 1400
TULSA, OK 74104 918-664-5400 www.pec1.com

REVISION	BY	DATE

PLAN SCALE: 1" =	DRAWN	BFS	01/2020	APPROVED:
	DESIGNED	JPD	01/2020	
	SURVEY			
PROFILE SCALE:	PROJ. MGR.			
	LEAD ENGR.			
HORIZONTAL: 1" = 5'	FIELD MGR.			
	RECOMMENDED:			
VERTICAL 1" = 5'	DESIGN MANAGER			CITY ENGINEER
FILE:	DRAWING:			DATE:
ATLAS PAGE NO: 218, 219, 281, 282				SHEET 121 OF 165 SHEETS

DSWG: XXX PLOTTED BY: $USER$ SCALE: $SCALE$ $DATE$ $TIME$ $FILE$

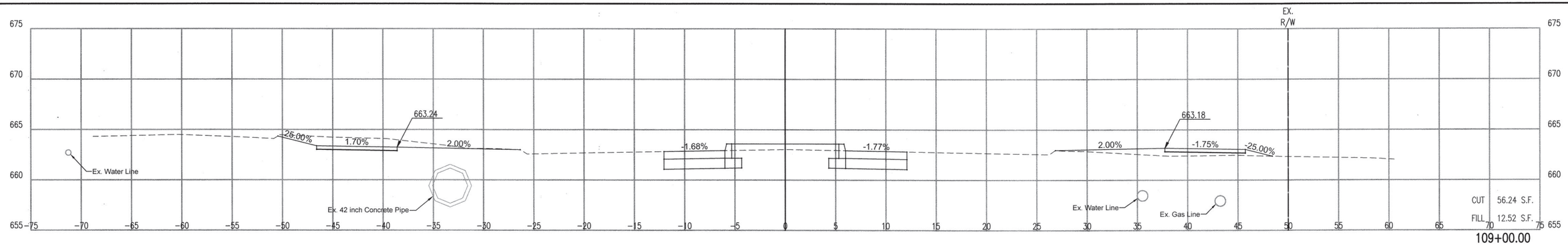

109+00.00

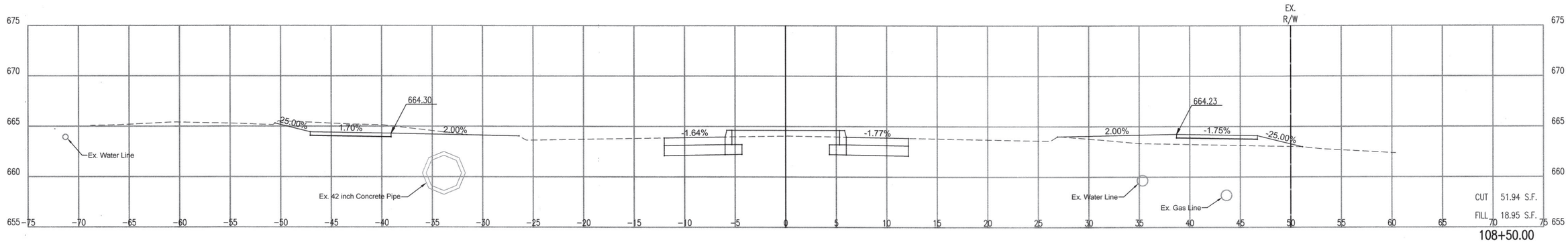

108+50.00

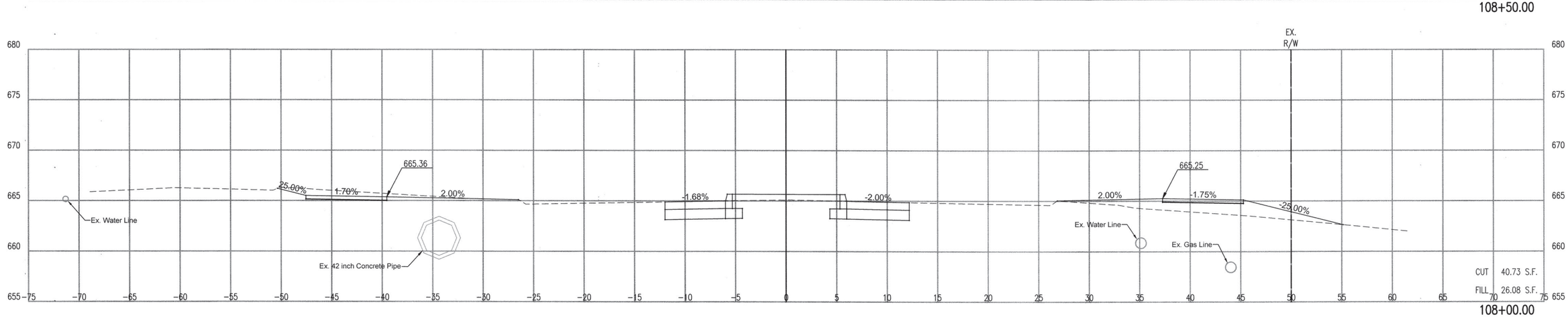

108+00.00

LICENSED PROFESSIONAL ENGINEER
JASON P. DICKMAN 27639
OKLAHOMA
07/19/2020

CROSS SECTIONS – 108+00.00 TO 109+00.00

PROJECT NO. 144200

ARTERIAL STREET REHABILITATION AND WATERLINE REPLACEMENT – 36TH ST. N. – MLK BLVD TO PEORIA AVE.

CITY OF TULSA, OKLAHOMA
ENGINEERING SERVICES DEPARTMENT

PLANS AND ESTIMATES PREPARED BY:

PEC PROFESSIONAL ENGINEERING CONSULTANTS, P.A.
1924 S. UTICA AVE., SUITE 1400
TULSA, OK 74104 918-664-5400 www.pec1.com

REVISION	BY	DATE

PLAN SCALE: 1" =	DRAWN	BFS	01/2020	APPROVED:
	DESIGNED	JPD	01/2020	
	SURVEY			
PROFILE SCALE:	PROJ. MGR.			
HORIZONTAL: 1" = 5'	LEAD ENGR.			
	FIELD MGR.			
VERTICAL 1" = 5'	RECOMMENDED:			
	DESIGN MANAGER			CITY ENGINEER
FILE:	DRAWING:			DATE:
ATLAS PAGE NO: 218, 219, 281, 282				SHEET 122 OF 165 SHEETS

DSNR: XXX PLOTTED BY: USR SCALE: $SCALE$ $DATE$ $TIME$ $FILE$

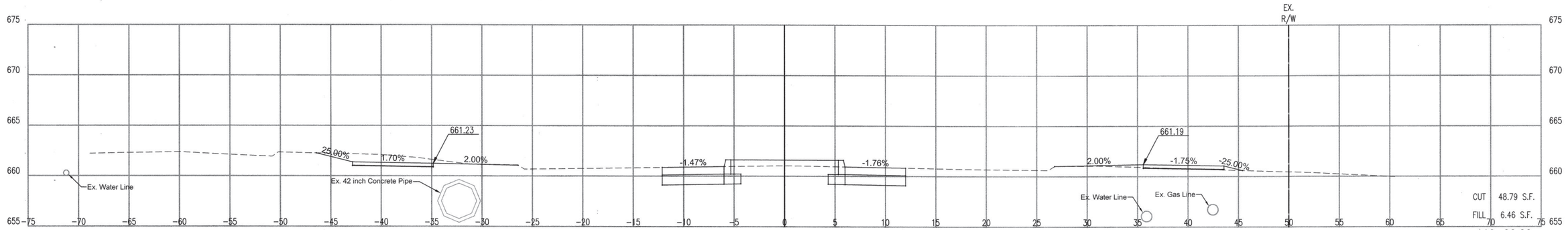

110+00.00

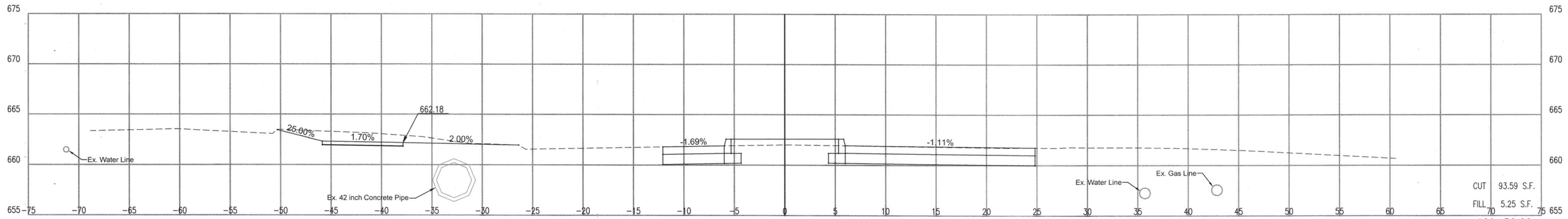

109+50.00

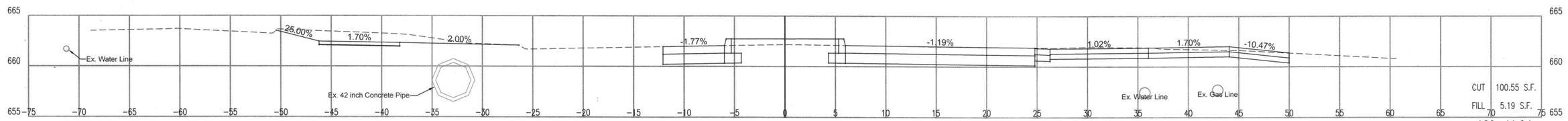

109+41.94

$TIME$
$DATE$
$SCALE$
$USER$ SCALE:
DSNG: XXX PLOTTED BY:
$FILE$

CROSS SECTIONS – 109+41.94 TO 110+00.00

PROJECT NO. 144200

ARTERIAL STREET REHABILITATION AND WATERLINE REPLACEMENT – 36TH ST. N. – MLK BLVD TO PEORIA AVE.

CITY OF TULSA, OKLAHOMA
ENGINEERING SERVICES DEPARTMENT

LICENSED PROFESSIONAL ENGINEER
JASON P. DICKMAN
27639
OKLAHOMA
07/19/2020

PLANS AND ESTIMATES PREPARED BY: PEC PROFESSIONAL ENGINEERING CONSULTANTS, P.A. 1924 S. UTICA AVE., SUITE 1400 TULSA, OK 74104 918-664-5400 www.pec1.com

REVISION	BY	DATE

PLAN SCALE: 1" =	DRAWN	BFS	01/2020	APPROVED:
	DESIGNED	JPD	01/2020	
	SURVEY			
PROFILE SCALE:	PROJ. MGR.			
HORIZONTAL: 1" = 5'	LEAD ENGR.			
	FIELD MGR.			
VERTICAL 1" = 5'	RECOMMENDED: DESIGN MANAGER			CITY ENGINEER
FILE:	DRAWING:			DATE:
ATLAS PAGE NO: 218, 219, 281, 282				SHEET 123 OF 165 SHEETS

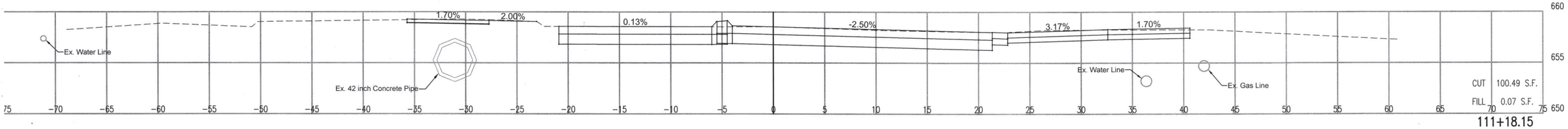

CUT 100.49 S.F.
FILL 0.07 S.F.

111+18.15

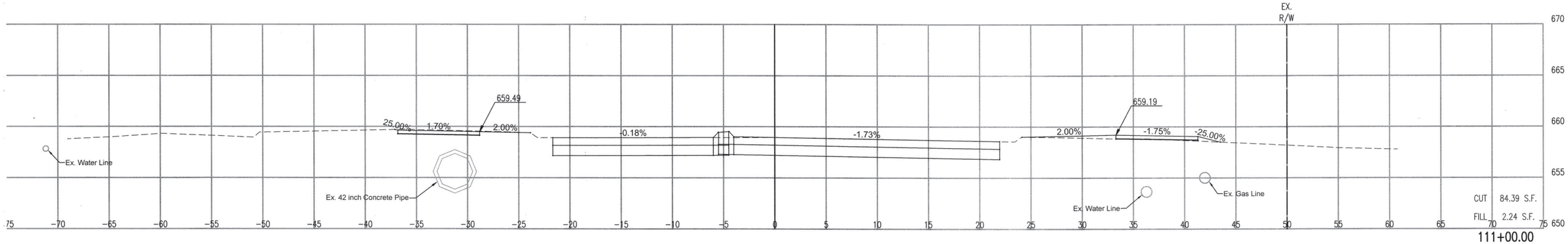

CUT 84.39 S.F.
FILL 2.24 S.F.

111+00.00

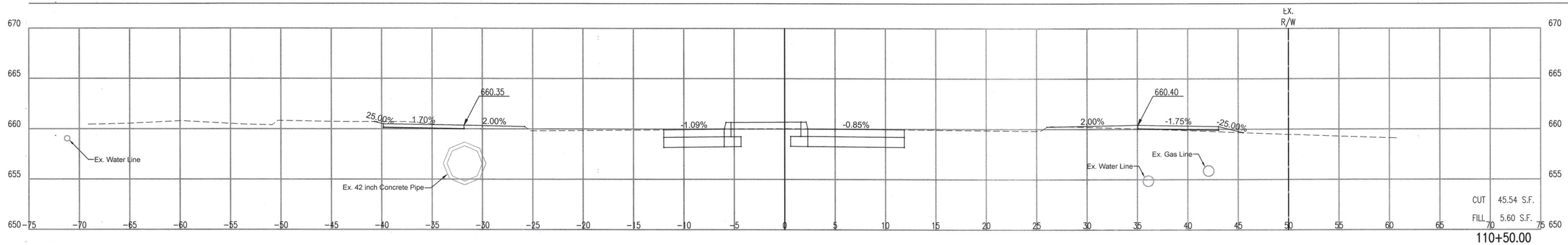

CUT 45.54 S.F.
FILL 5.60 S.F.

110+50.00

LICENSED PROFESSIONAL ENGINEER
JASON P. DICKMAN
27639
OKLAHOMA
07/19/2020

REVISION	BY	DATE

CROSS SECTIONS – 110+50.00 TO 111+18.15

PROJECT NO. 144200

ARTERIAL STREET REHABILITATION AND WATERLINE REPLACEMENT – 36TH ST. N. – MLK BLVD TO PEORIA AVE.

CITY OF TULSA, OKLAHOMA
ENGINEERING SERVICES DEPARTMENT

PLANS AND ESTIMATES PREPARED BY:

PEC PROFESSIONAL ENGINEERING CONSULTANTS, P.A.
1924 S. UTICA AVE., SUITE 1400
TULSA, OK 74104 918-664-5400 www.pec1.com

PLAN SCALE: 1" =	DRAWN	BFS	01/2020	APPROVED:
	DESIGNED	JPD	01/2020	
	SURVEY			
PROFILE SCALE:	PROJ. MGR.			
HORIZONTAL: 1" = 5'	LEAD ENGR.			
	FIELD MGR.			
VERTICAL 1" = 5'	RECOMMENDED:			
	DESIGN MANAGER			CITY ENGINEER

FILE: DRAWING: DATE:

ATLAS PAGE NO: 218, 219, 281, 282 SHEET 124 OF 165 SHEETS

DSNR: XXX PLOTTED BY: $USER$ SCALE: $SCALE$ $DATE$ $TIME$ $FILE$

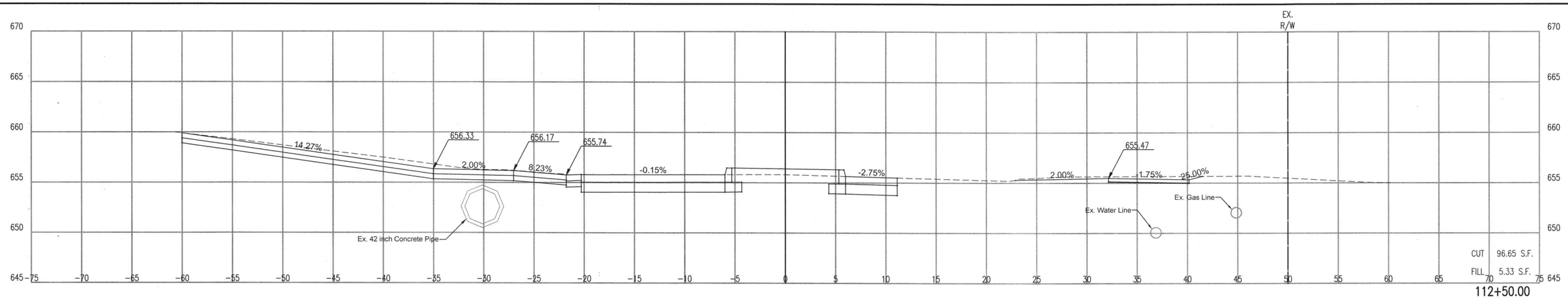

112+50.00

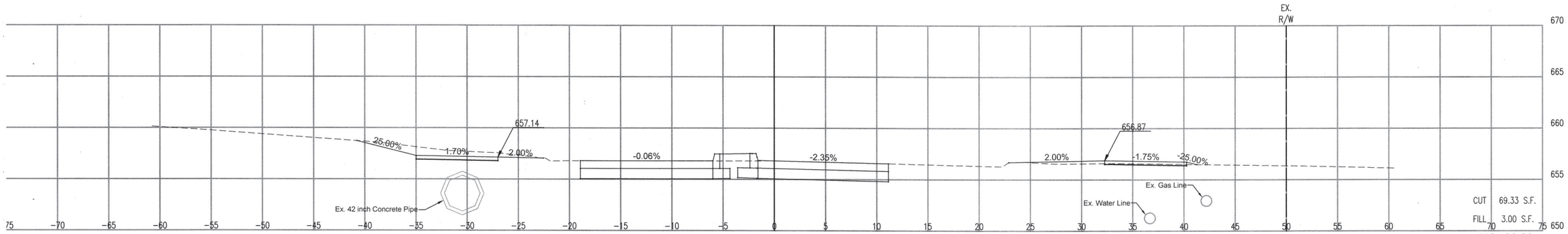

112+00.00

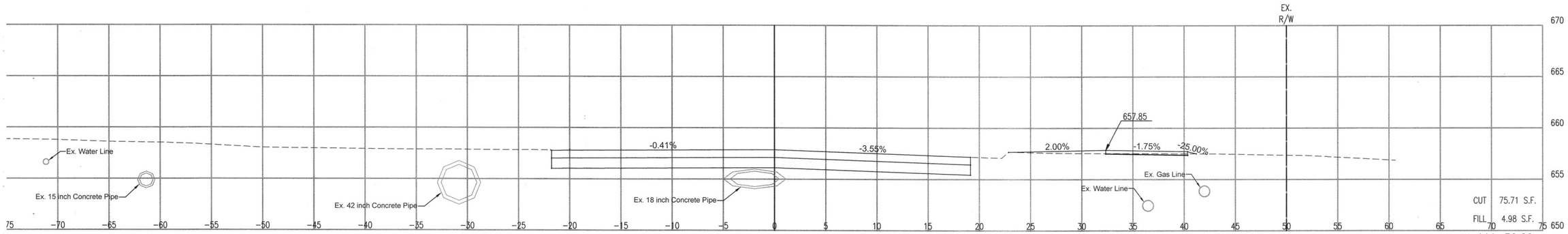

111+50.00

LICENSED PROFESSIONAL ENGINEER
JASON P. DICKMAN 27639
OKLAHOMA
07/19/2020

REVISION	BY	DATE

CROSS SECTIONS – 111+50.00 TO 112+50.00

PROJECT NO. 144200

ARTERIAL STREET REHABILITATION AND WATERLINE REPLACEMENT – 36TH ST. N. – MLK BLVD TO PEORIA AVE.

CITY OF TULSA, OKLAHOMA
ENGINEERING SERVICES DEPARTMENT

PLANS AND ESTIMATES PREPARED BY: PEC — PROFESSIONAL ENGINEERING CONSULTANTS, P.A. 1924 S. UTICA AVE., SUITE 1400 TULSA, OK 74104 918-664-5400 www.pec1.com

PLAN SCALE: 1" =	DRAWN	BFS	01/2020	APPROVED:
	DESIGNED	JPD	01/2020	
	SURVEY			
PROFILE SCALE:	PROJ. MGR.			
HORIZONTAL: 1" = 5'	LEAD ENGR.			
	FIELD MGR.			
VERTICAL 1" = 5'	RECOMMENDED: DESIGN MANAGER			CITY ENGINEER
FILE:	DRAWING:			DATE:
ATLAS PAGE NO: 218, 219, 281, 282				SHEET 125 OF 165 SHEETS

DGN#: XXX PLOTTED BY: $USER$ SCALE: $SCALE$ $DATE$ $TIME$
$FILE$

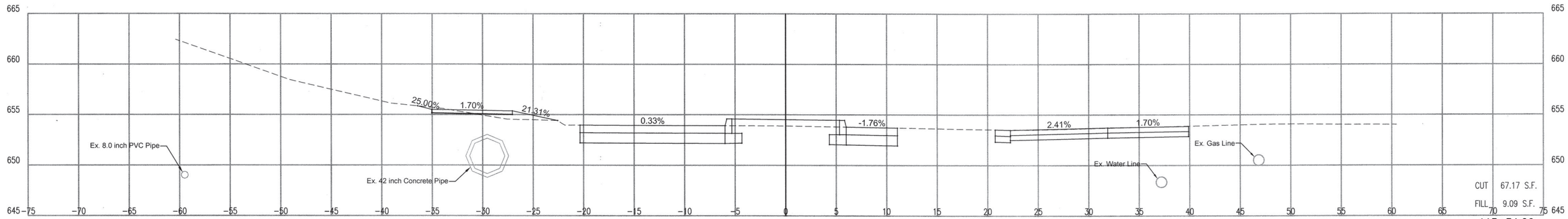

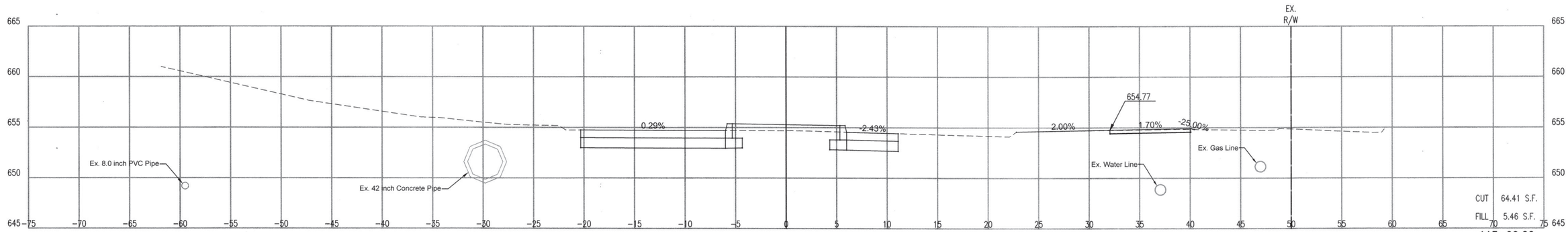

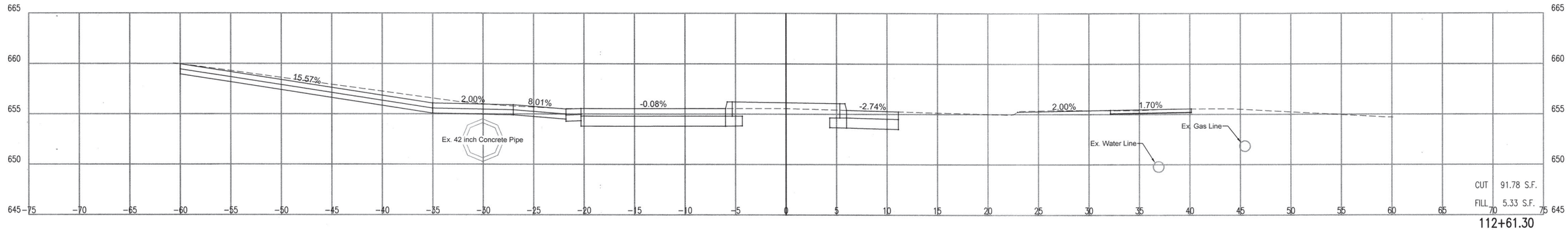

CROSS SECTIONS – 112+61.30 TO 113+34.26

PROJECT NO. 144200

ARTERIAL STREET REHABILITATION AND WATERLINE REPLACEMENT – 36TH ST. N. – MLK BLVD TO PEORIA AVE.

CITY OF TULSA, OKLAHOMA
ENGINEERING SERVICES DEPARTMENT

LICENSED PROFESSIONAL ENGINEER
JASON P. DICKMAN
27639
OKLAHOMA
07/19/2020

PLANS AND ESTIMATES PREPARED BY:
PEC PROFESSIONAL ENGINEERING CONSULTANTS, P.A.
1924 S. UTICA AVE., SUITE 1400
TULSA, OK 74104 918-664-5400 www.pec1.com

REVISION	BY	DATE

PLAN SCALE: 1" =
PROFILE SCALE:
HORIZONTAL: 1" = 5'
VERTICAL 1" = 5'

DRAWN	BFS	01/2020	APPROVED:
DESIGNED	JPD	01/2020	
SURVEY			
PROJ. MGR.			
LEAD ENGR.			
FIELD MGR.			

RECOMMENDED:
DESIGN MANAGER

CITY ENGINEER

FILE: DRAWING: DATE:

ATLAS PAGE NO: 218, 219, 281, 282

SHEET 126 OF 165 SHEETS

DSNR: XXX PLOTTED BY: $USER$ SCALE: $SCALE$ $DATE$ $TIME$ $FILE$

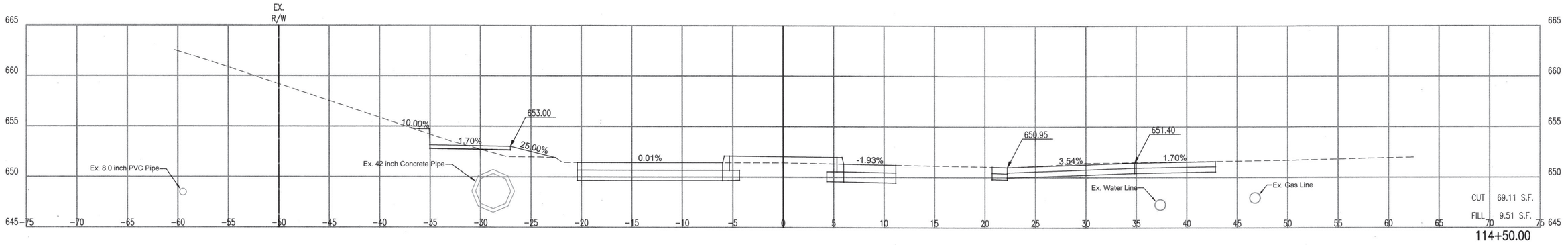

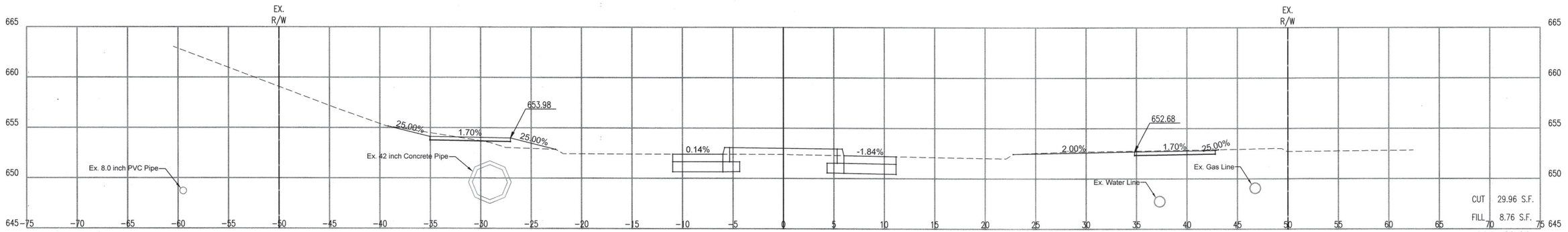

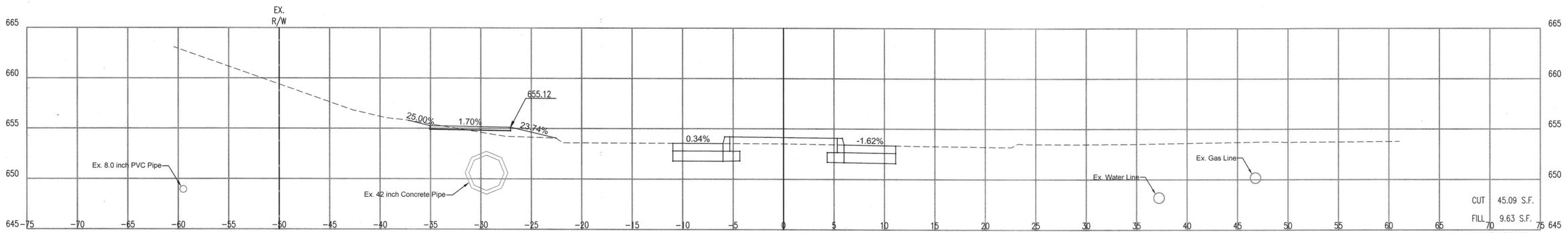

JASON P. DICKMAN 27639 LICENSED PROFESSIONAL ENGINEER OKLAHOMA

07/19/2020

CROSS SECTIONS – 113+50.00 TO 114+50.00

PROJECT NO. 144200

ARTERIAL STREET REHABILITATION AND WATERLINE REPLACEMENT – 36TH ST. N. – MLK BLVD TO PEORIA AVE.

CITY OF TULSA, OKLAHOMA
ENGINEERING SERVICES DEPARTMENT

PLANS AND ESTIMATES PREPARED BY:

PEC PROFESSIONAL ENGINEERING CONSULTANTS, P.A.
1924 S. UTICA AVE., SUITE 1400
TULSA, OK 74104 918-664-5400 www.pec1.com

REVISION	BY	DATE

PLAN SCALE: 1" =	DRAWN	BFS	01/2020	APPROVED:
	DESIGNED	JPD	01/2020	
	SURVEY			
PROFILE SCALE:	PROJ. MGR.			
HORIZONTAL: 1" = 5'	LEAD ENGR.			
	FIELD MGR.			
VERTICAL 1" = 5'	RECOMMENDED: DESIGN MANAGER			CITY ENGINEER
FILE:	DRAWING:			DATE:
ATLAS PAGE NO: 218, 219, 281, 282				SHEET 127 OF 165 SHEETS

DSNR: XXX PLOTTED BY: #FILE$ #USER$ SCALE: $SCALE$ $DATE$ $TIME$

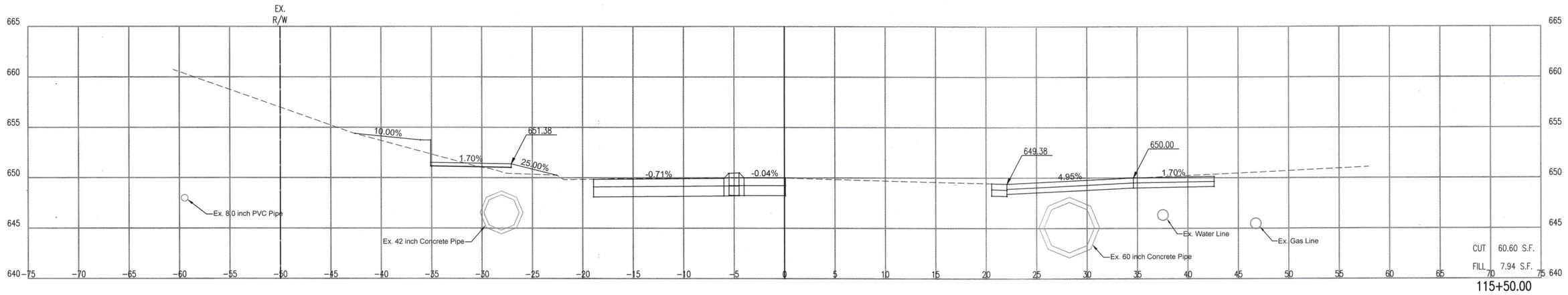

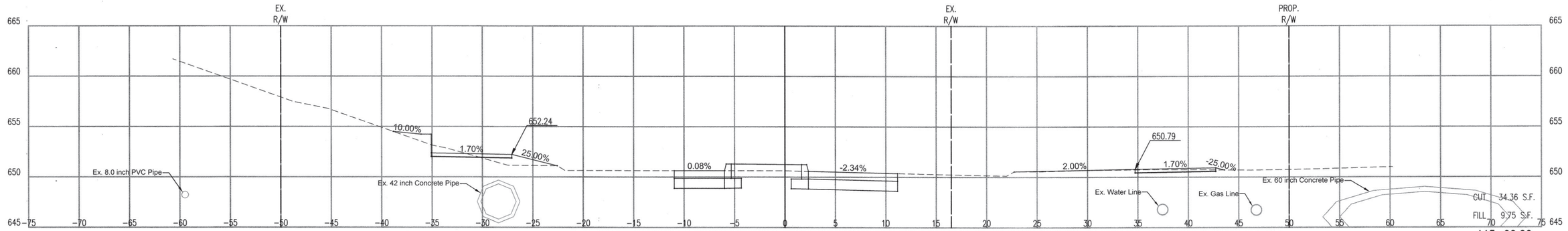

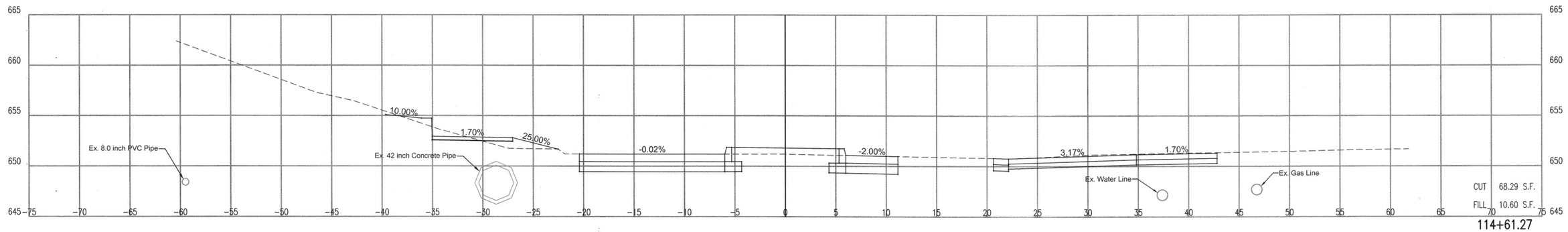

JASON P. DICKMAN 27639 LICENSED PROFESSIONAL ENGINEER OKLAHOMA
07/19/2020

CROSS SECTIONS – 114+61.27 TO 115+50.00

PROJECT NO. 144200

ARTERIAL STREET REHABILITATION AND WATERLINE REPLACEMENT – 36TH ST. N. – MLK BLVD TO PEORIA AVE.

CITY OF TULSA, OKLAHOMA
ENGINEERING SERVICES DEPARTMENT

PLANS AND ESTIMATES PREPARED BY: PEC PROFESSIONAL ENGINEERING CONSULTANTS, P.A. 1924 S. UTICA AVE., SUITE 1400 TULSA, OK 74104 918-664-5400 www.pec1.com

REVISION	BY	DATE

PLAN SCALE: 1" =	DRAWN	BFS	01/2020	APPROVED:
	DESIGNED	JPD	01/2020	
	SURVEY			
PROFILE SCALE:	PROJ. MGR.			
HORIZONTAL: 1" = 5'	LEAD ENGR.			
	FIELD MGR.			
VERTICAL 1" = 5'	RECOMMENDED: DESIGN MANAGER			CITY ENGINEER
FILE:	DRAWING:			DATE:
ATLAS PAGE NO: 218, 219, 281, 282				SHEET 128 OF 165 SHEETS

DGN: XXX PLOTTED BY: $FILE$ $USER$ SCALE: $SCALE$ $DATE$ $TIME$

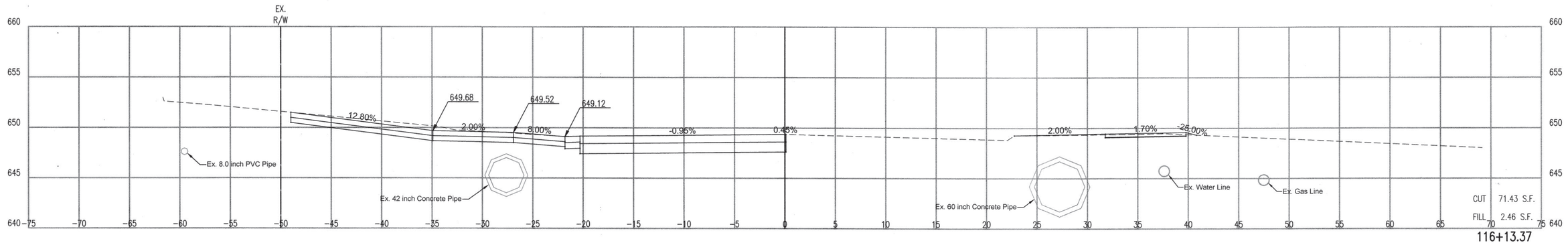

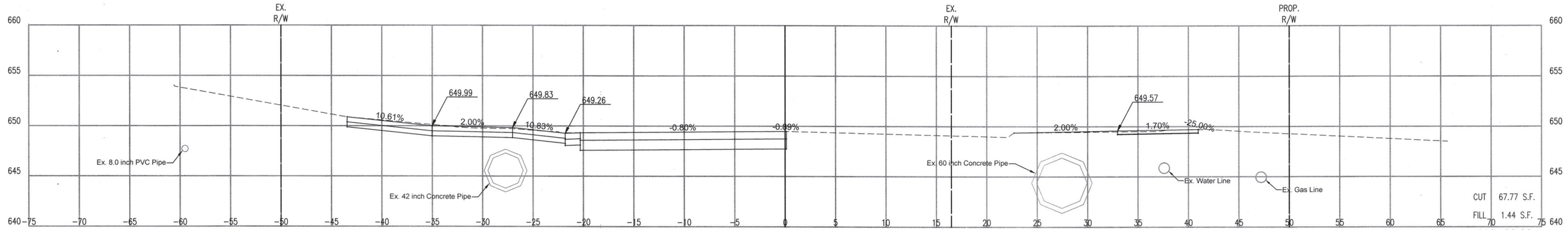

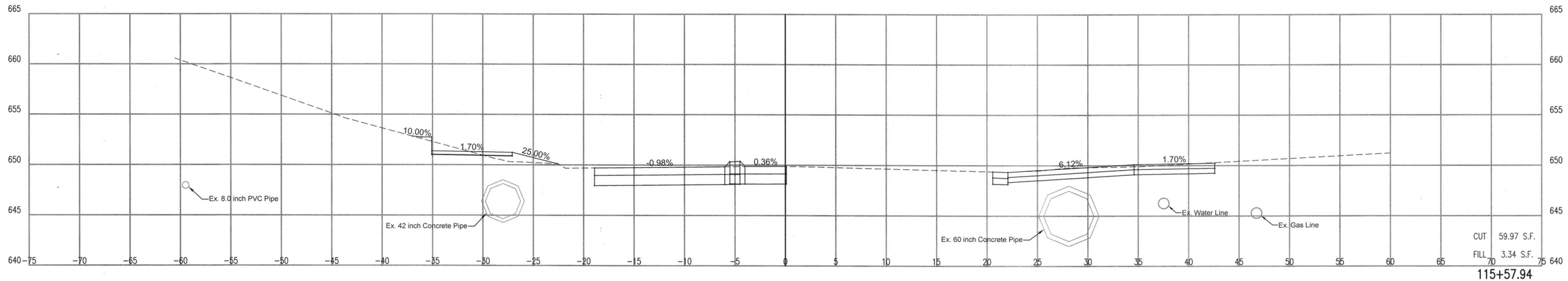

CROSS SECTIONS – 115+57.97 TO 116+13.37

PROJECT NO. 144200

ARTERIAL STREET REHABILITATION AND WATERLINE REPLACEMENT – 36TH ST. N. – MLK BLVD TO PEORIA AVE.

CITY OF TULSA, OKLAHOMA
ENGINEERING SERVICES DEPARTMENT

LICENSED PROFESSIONAL ENGINEER
JASON P. DICKMAN
27639
OKLAHOMA
07/19/2020

PLANS AND ESTIMATES PREPARED BY:

PEC PROFESSIONAL ENGINEERING CONSULTANTS, P.A.
1924 S. UTICA AVE., SUITE 1400
TULSA, OK 74104 918-664-5400 www.pec1.com

REVISION	BY	DATE

PLAN SCALE: 1" =	DRAWN	BFS	01/2020	APPROVED:
	DESIGNED	JPD	01/2020	
	SURVEY			
PROFILE SCALE:	PROJ. MGR.			
HORIZONTAL: 1" = 5'	LEAD ENGR.			
	FIELD MGR.			
VERTICAL 1" = 5'	RECOMMENDED:			
	DESIGN MANAGER			CITY ENGINEER
FILE:	DRAWING:			DATE:
ATLAS PAGE NO: 218, 219, 281, 282				SHEET 129 OF 165 SHEETS

DSNR: XXX PLOTTED BY: $USER$ SCALE: $SCALE$ $DATE$ $TIME$
$FILE$

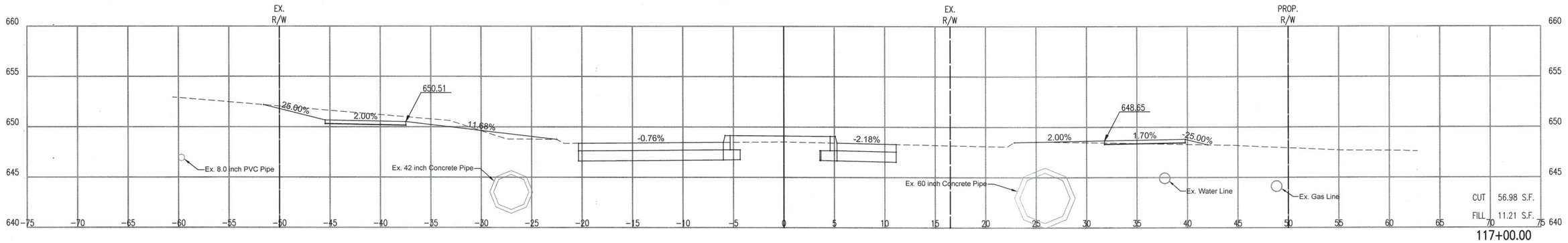

117+00.00

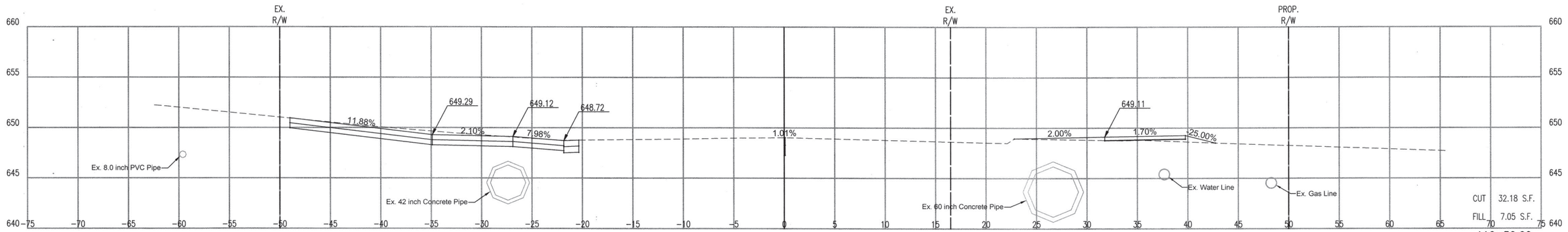

116+50.00

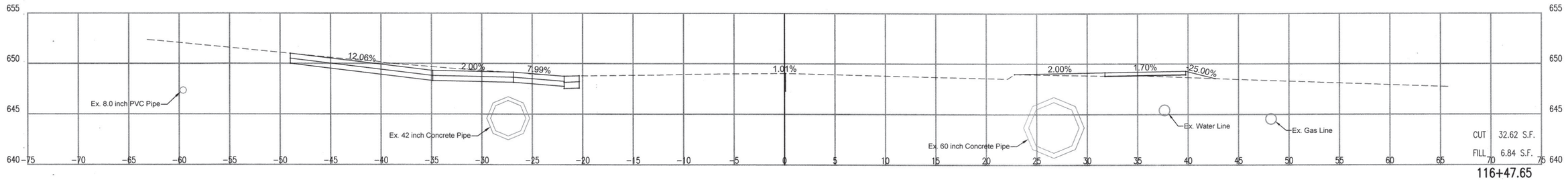

116+47.65

CROSS SECTIONS – 116+47.65 TO 117+00.00

PROJECT NO. 144200

ARTERIAL STREET REHABILITATION AND WATERLINE REPLACEMENT – 36TH ST. N. – MLK BLVD TO PEORIA AVE.

CITY OF TULSA, OKLAHOMA
ENGINEERING SERVICES DEPARTMENT

LICENSED PROFESSIONAL ENGINEER
JASON P. DICKMAN 27639
OKLAHOMA
07/19/2020

PLANS AND ESTIMATES PREPARED BY:
PEC PROFESSIONAL ENGINEERING CONSULTANTS, P.A.
1924 S. UTICA AVE., SUITE 1400
TULSA, OK 74104 918-664-5400 www.pec1.com

REVISION	BY	DATE

PLAN SCALE: 1" =
PROFILE SCALE:
HORIZONTAL: 1" = 5'
VERTICAL 1" = 5'

DRAWN	BFS	01/2020	APPROVED:
DESIGNED	JPD	01/2020	
SURVEY			
PROJ. MGR.			
LEAD ENGR.			
FIELD MGR.			

RECOMMENDED:
DESIGN MANAGER
CITY ENGINEER

FILE: DRAWING: DATE:

ATLAS PAGE NO: 218, 219, 281, 282 SHEET 130 OF 165 SHEETS

$TIME$ $DATE$ $SCALE$ SCALE: $USER$ PLOTTED BY: XXX DSNR: $FILE$

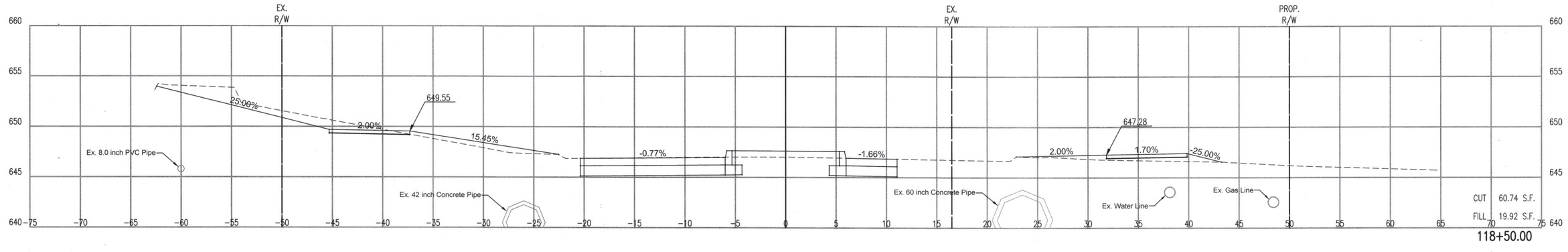

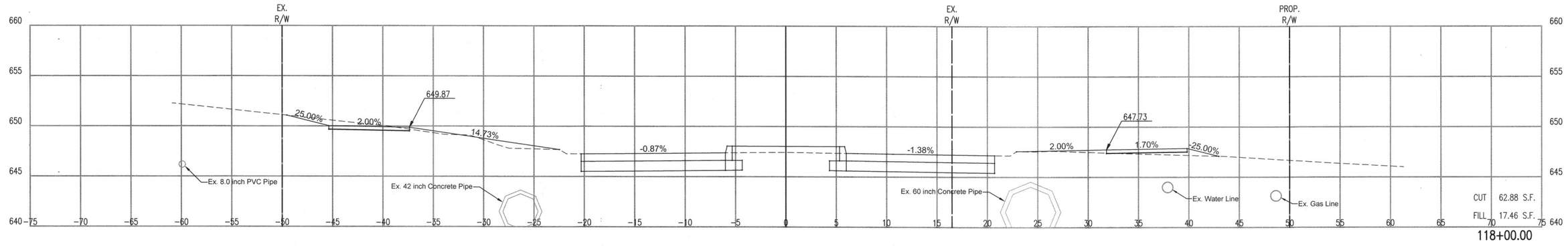

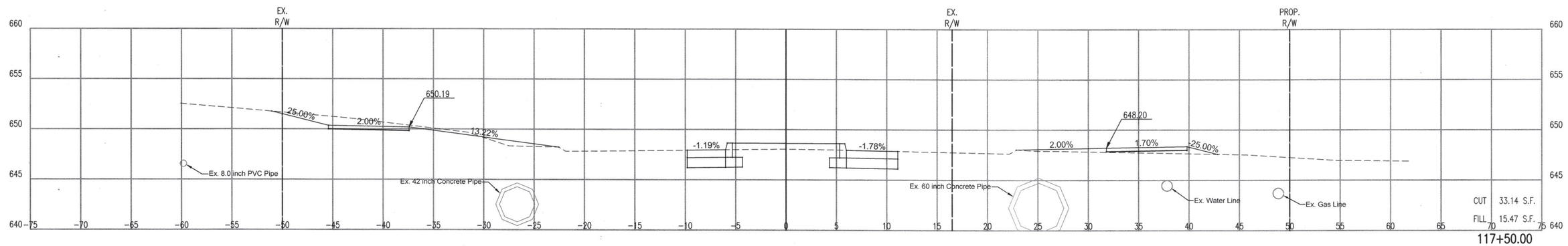

LICENSED PROFESSIONAL ENGINEER
JASON P. DICKMAN 27639
OKLAHOMA
07/19/2020

REVISION	BY	DATE

CROSS SECTIONS – 117+50.00 TO 118+50.00

PROJECT NO. 144200

ARTERIAL STREET REHABILITATION AND WATERLINE REPLACEMENT – 36TH ST. N. – MLK BLVD TO PEORIA AVE.

CITY OF TULSA, OKLAHOMA
ENGINEERING SERVICES DEPARTMENT

PLANS AND ESTIMATES PREPARED BY:
PEC PROFESSIONAL ENGINEERING CONSULTANTS, P.A.
1924 S. UTICA AVE., SUITE 1400
TULSA, OK 74104 918-664-5400 www.pec1.com

PLAN SCALE: 1" =	DRAWN	BFS	01/2020	APPROVED:
	DESIGNED	JPD	01/2020	
	SURVEY			
PROFILE SCALE:	PROJ. MGR.			
HORIZONTAL: 1" = 5'	LEAD ENGR.			
	FIELD MGR.			
VERTICAL 1" = 5'	RECOMMENDED:			
	DESIGN MANAGER			CITY ENGINEER
FILE:	DRAWING:			DATE:
ATLAS PAGE NO: 218, 219, 281, 282				SHEET 131 OF 165 SHEETS

DSNG: XXX PLOTTED BY: $USER$ SCALE: $SCALE$ $DATE$ $TIME$ $FILE$

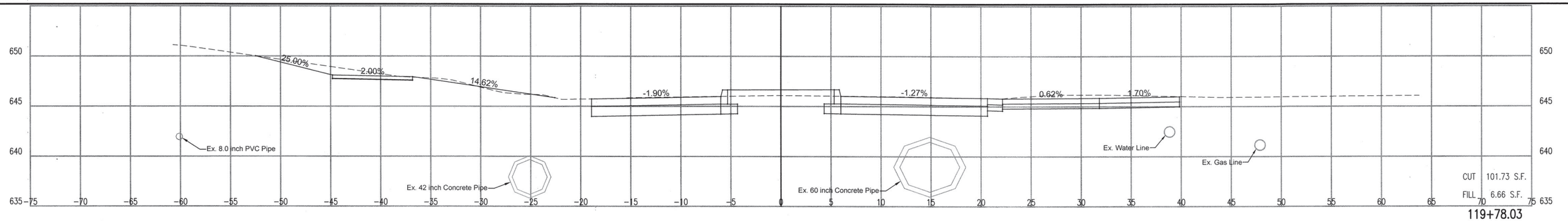

119+78.03

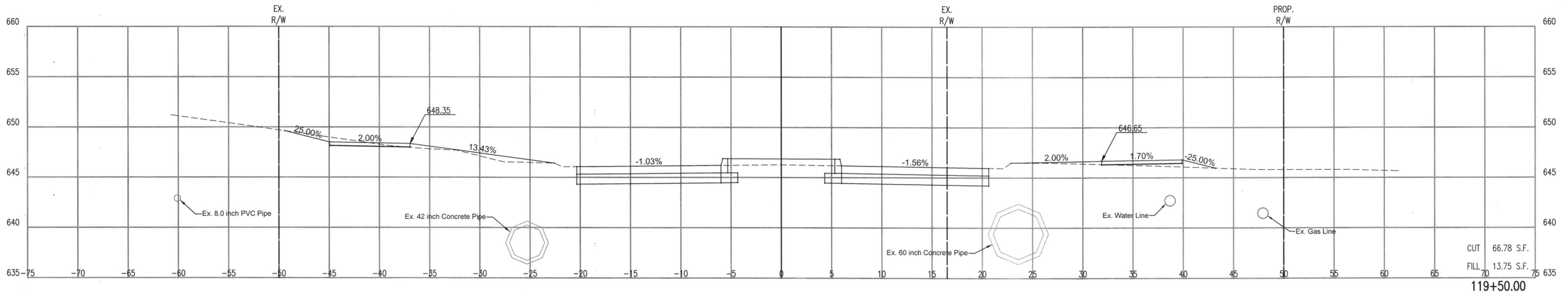

119+50.00

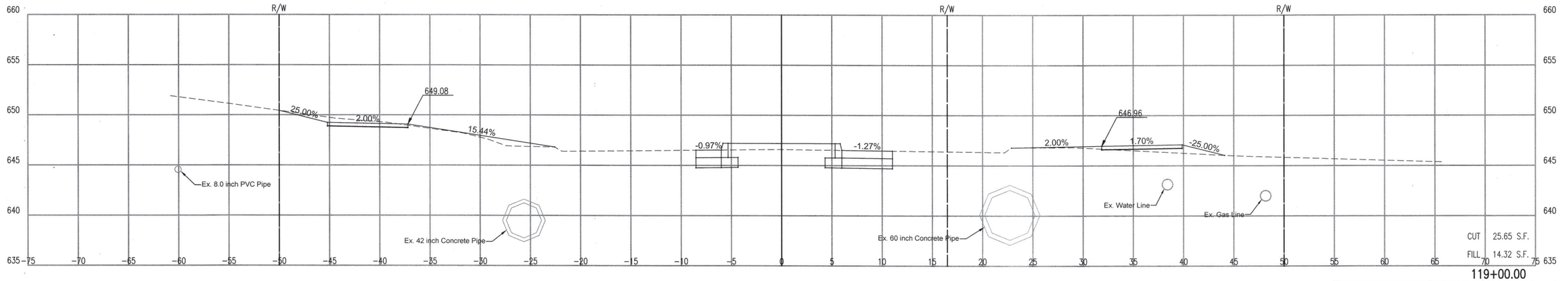

119+00.00

CROSS SECTIONS – 119+00.00 TO 119+78.03

PROJECT NO. 144200

ARTERIAL STREET REHABILITATION AND WATERLINE REPLACEMENT – 36TH ST. N. – MLK BLVD TO PEORIA AVE.

CITY OF TULSA, OKLAHOMA
ENGINEERING SERVICES DEPARTMENT

LICENSED PROFESSIONAL ENGINEER
JASON P. DICKMAN
27639
OKLAHOMA
07/19/2020

PLANS AND ESTIMATES PREPARED BY:
PEC PROFESSIONAL ENGINEERING CONSULTANTS, P.A.
1924 S. UTICA AVE., SUITE 1400
TULSA, OK 74104 918-664-5400 www.pec1.com

REVISION	BY	DATE

PLAN SCALE: 1" =	DRAWN	BFS	01/2020
	DESIGNED	JPD	01/2020
	SURVEY		
PROFILE SCALE:	PROJ. MGR.		
HORIZONTAL: 1" = 5'	LEAD ENGR.		
	FIELD MGR.		
VERTICAL 1" = 5'	RECOMMENDED:		
	DESIGN MANAGER		CITY ENGINEER
FILE:	DRAWING:		DATE:
ATLAS PAGE NO: 218, 219, 281, 282			SHEET 132 OF 165 SHEETS

APPROVED:

DSNR: XXX PLOTTED BY: $USER$ SCALE: $SCALE$ $DATE$ $TIME$ $FILE$

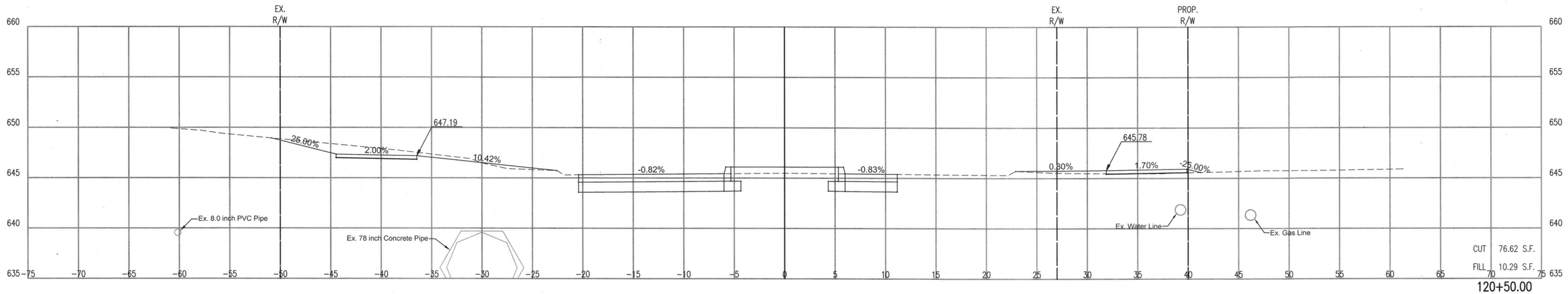

CUT 76.62 S.F.
FILL 10.29 S.F.

120+50.00

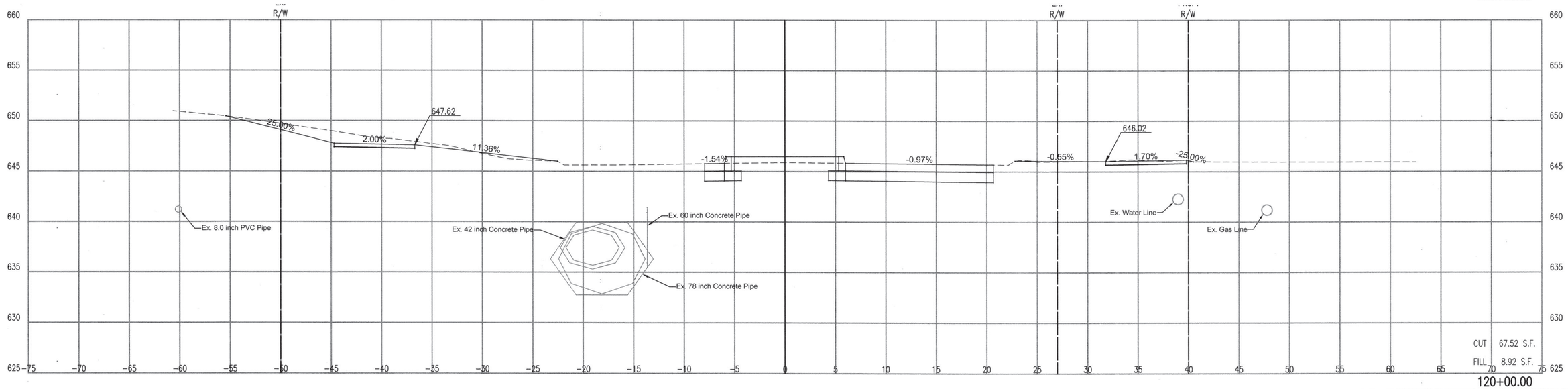

CUT 67.52 S.F.
FILL 8.92 S.F.

120+00.00

CROSS SECTIONS – 120+00.00 TO 120+50.00

PROJECT NO. 144200

ARTERIAL STREET REHABILITATION AND WATERLINE REPLACEMENT – 36TH ST. N. – MLK BLVD TO PEORIA AVE.

CITY OF TULSA, OKLAHOMA
ENGINEERING SERVICES DEPARTMENT

LICENSED PROFESSIONAL ENGINEER
JASON P. DICKMAN
27639
OKLAHOMA
07/19/2020

PLANS AND ESTIMATES PREPARED BY: PEC PROFESSIONAL ENGINEERING CONSULTANTS, P.A. 1924 S. UTICA AVE., SUITE 1400 TULSA, OK 74104 918-664-5400 www.pec1.com

REVISION	BY	DATE

PLAN SCALE: 1" =	DRAWN	BFS	01/2020	APPROVED:
	DESIGNED	JPD	01/2020	
	SURVEY			
PROFILE SCALE:	PROJ. MGR.			
HORIZONTAL: 1" = 5'	LEAD ENGR.			
	FIELD MGR.			
VERTICAL 1" = 5'	RECOMMENDED: DESIGN MANAGER			CITY ENGINEER
FILE:	DRAWING:			DATE:
ATLAS PAGE NO: 218, 219, 281, 282				SHEET 133 OF 165 SHEETS

DSNR: XXX PLOTTED BY: $USER$ SCALE: $SCALE$ $DATE$ $TIME$ $FILE$

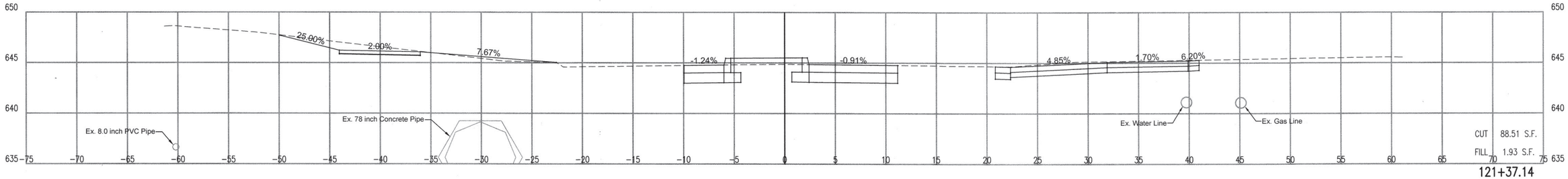

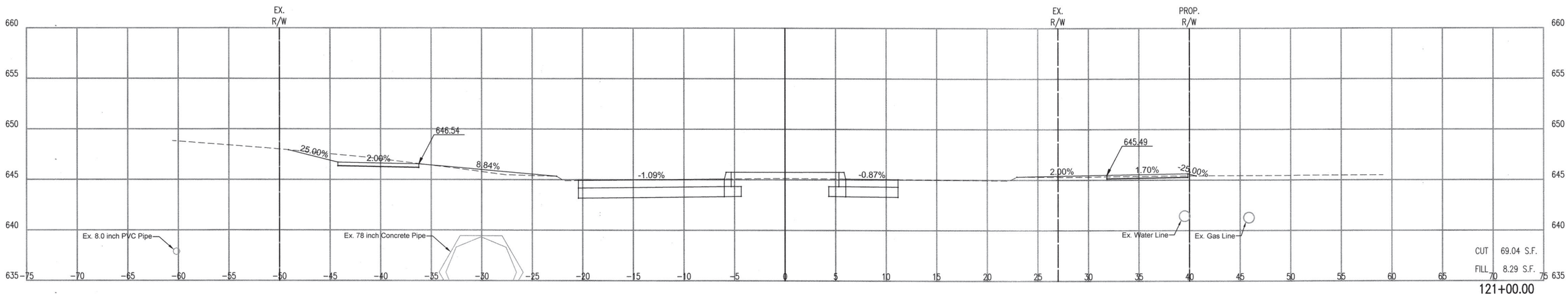

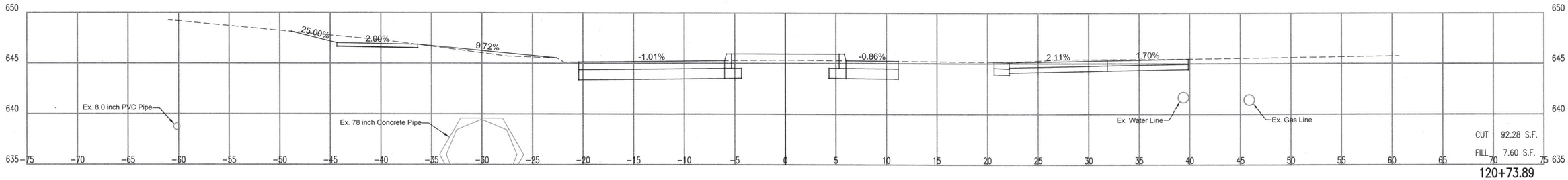

LICENSED PROFESSIONAL ENGINEER
JASON P. DICKMAN 27639
OKLAHOMA
07/19/2020

CROSS SECTIONS – 120+73.89 TO 121+37.14

PROJECT NO. 144200

ARTERIAL STREET REHABILITATION AND WATERLINE REPLACEMENT – 36TH ST. N. – MLK BLVD TO PEORIA AVE.

CITY OF TULSA, OKLAHOMA
ENGINEERING SERVICES DEPARTMENT

PLANS AND ESTIMATES PREPARED BY:

PEC PROFESSIONAL ENGINEERING CONSULTANTS, P.A.
1924 S. UTICA AVE., SUITE 1400
TULSA, OK 74104 918-664-5400 www.pect.com

REVISION	BY	DATE

PLAN SCALE: 1" =	DRAWN	BFS	01/2020	APPROVED:
	DESIGNED	JPD	01/2020	
	SURVEY			
PROFILE SCALE:	PROJ. MGR.			
HORIZONTAL: 1" = 5'	LEAD ENGR.			
	FIELD MGR.			
VERTICAL 1" = 5'	RECOMMENDED:			
	DESIGN MANAGER			CITY ENGINEER
FILE:	DRAWING:			DATE:
ATLAS PAGE NO: 218, 219, 281, 282				SHEET 134 OF 165 SHEETS

DSNR: XXX PLOTTED BY: $USER$ SCALE: $SCALE$ $DATE$ $TIME$
$FILE$

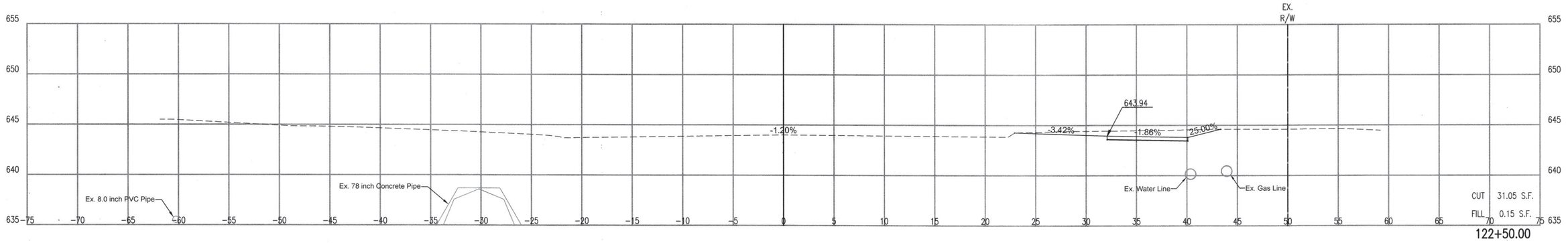

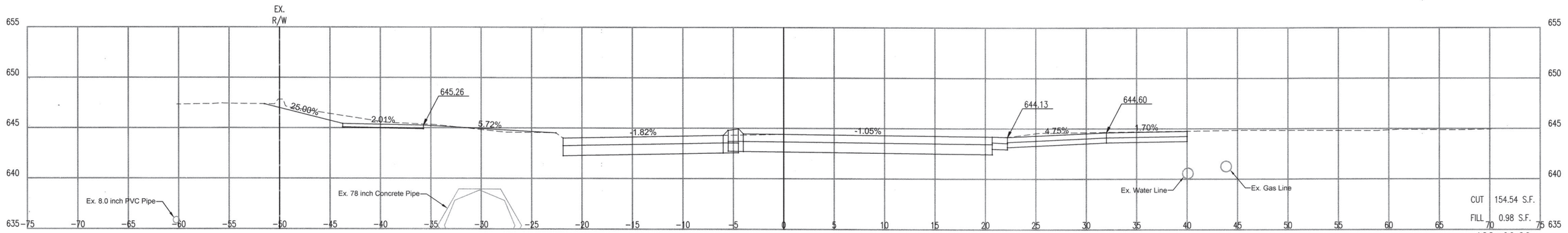

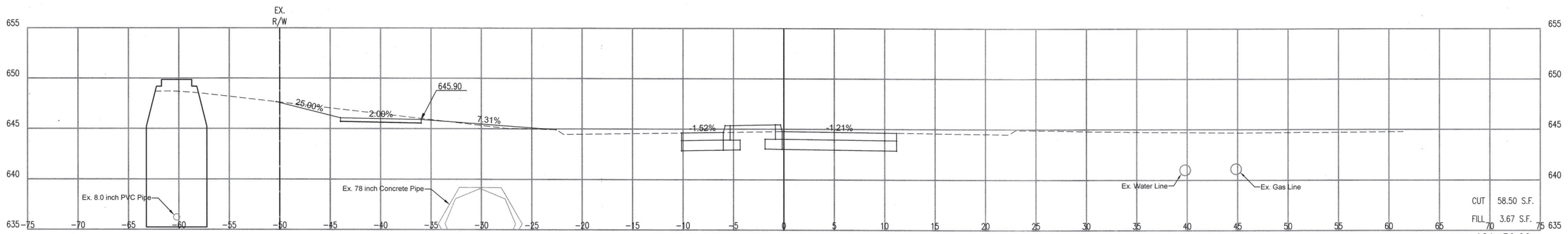

JASON P. DICKMAN 27639 LICENSED PROFESSIONAL ENGINEER OKLAHOMA
07/19/2020

CROSS SECTIONS – 121+50.00 TO 122+50.00

PROJECT NO. 144200

ARTERIAL STREET REHABILITATION AND WATERLINE REPLACEMENT – 36TH ST. N. – MLK BLVD TO PEORIA AVE.

CITY OF TULSA, OKLAHOMA
ENGINEERING SERVICES DEPARTMENT

PLANS AND ESTIMATES PREPARED BY:

PEC PROFESSIONAL ENGINEERING CONSULTANTS, P.A.
1924 S. UTICA AVE., SUITE 1400
TULSA, OK 74104 918-664-5400 www.pec1.com

REVISION	BY	DATE

PLAN SCALE: 1" =
PROFILE SCALE:
HORIZONTAL: 1" = 5'
VERTICAL 1" = 5'

DRAWN	BFS	01/2020	APPROVED:
DESIGNED	JPD	01/2020	
SURVEY			
PROJ. MGR.			
LEAD ENGR.			
FIELD MGR.			

RECOMMENDED:
DESIGN MANAGER
CITY ENGINEER

FILE: DRAWING: DATE:

ATLAS PAGE NO: 218, 219, 281, 282 SHEET 135 OF 165 SHEETS

DSNR: XXX PLOTTED BY: $FILE$ $USER$ SCALE: $SCALE$ $DATE$ $TIME$

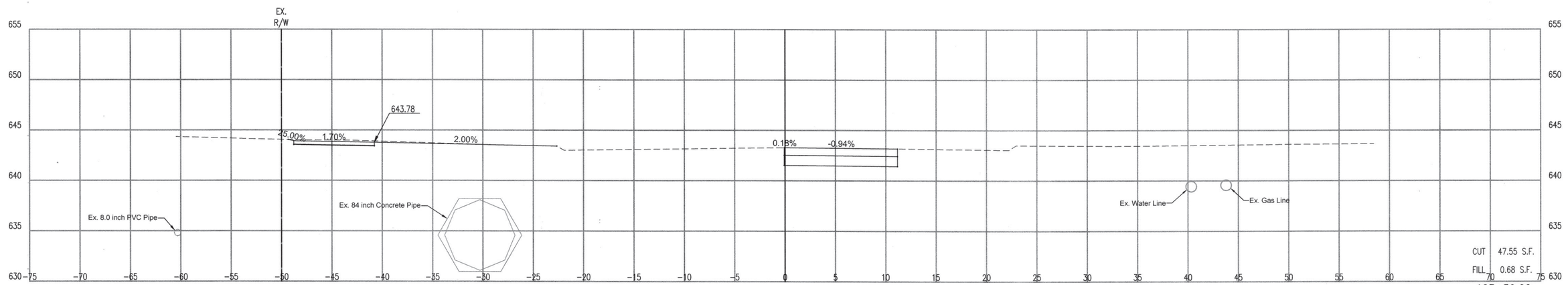

123+50.00

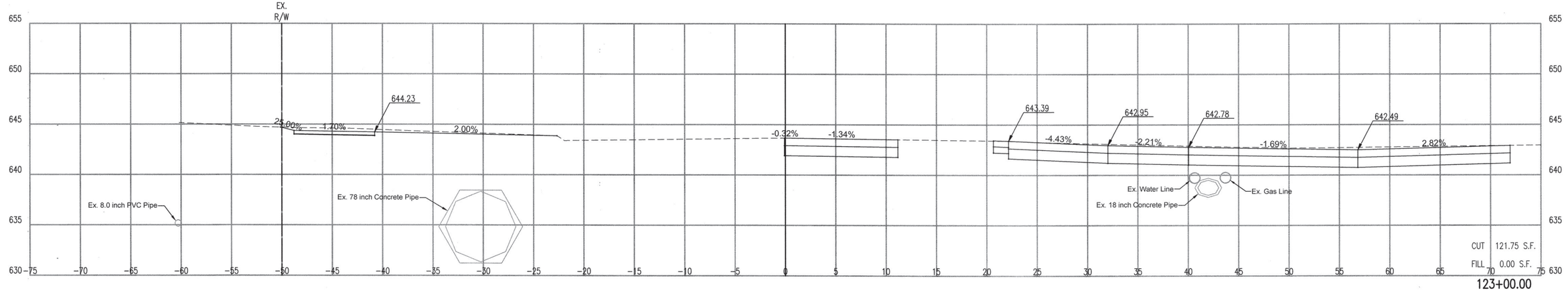

123+00.00

LICENSED PROFESSIONAL ENGINEER
JASON P. DICKMAN 27639
OKLAHOMA
07/19/2020

CROSS SECTIONS – 123+00.00 TO 123+50.00

PROJECT NO. 144200

ARTERIAL STREET REHABILITATION AND WATERLINE REPLACEMENT – 36TH ST. N. – MLK BLVD TO PEORIA AVE.

CITY OF TULSA, OKLAHOMA
ENGINEERING SERVICES DEPARTMENT

PLANS AND ESTIMATES PREPARED BY: PEC PROFESSIONAL ENGINEERING CONSULTANTS, P.A. 1924 S. UTICA AVE., SUITE 1400 TULSA, OK 74104 918-664-5400 www.pec1.com

REVISION	BY	DATE

PLAN SCALE: 1" =	DRAWN	BFS	01/2020	APPROVED:
	DESIGNED	JPD	01/2020	
	SURVEY			
PROFILE SCALE:	PROJ. MGR.			
HORIZONTAL: 1" = 5'	LEAD ENGR.			
	FIELD MGR.			
VERTICAL 1" = 5'	RECOMMENDED: DESIGN MANAGER			CITY ENGINEER
FILE:	DRAWING:			DATE:
ATLAS PAGE NO: 218, 219, 281, 282				SHEET 136 OF 165 SHEETS

DSNR: XXX PLOTTED BY: $FILE$ $USER$ SCALE: $SCALE$ $DATE$ $TIME$

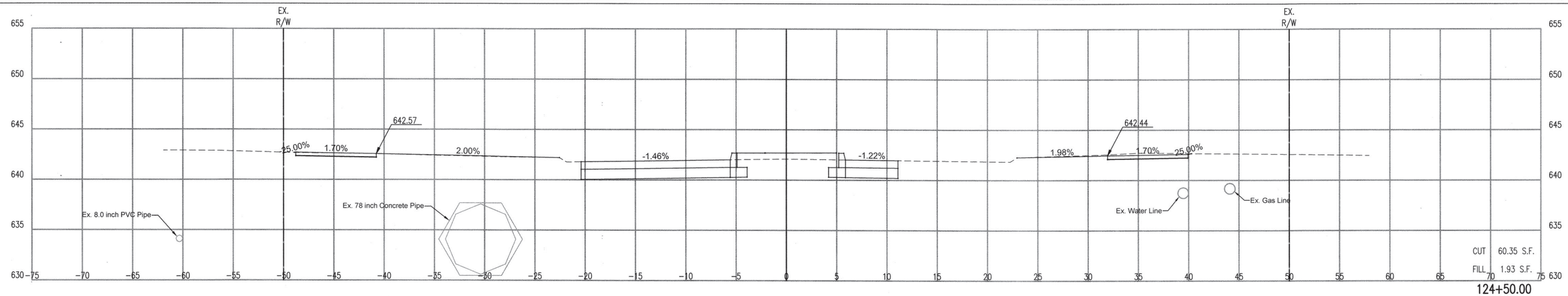

CUT 60.35 S.F.
FILL 1.93 S.F.

124+50.00

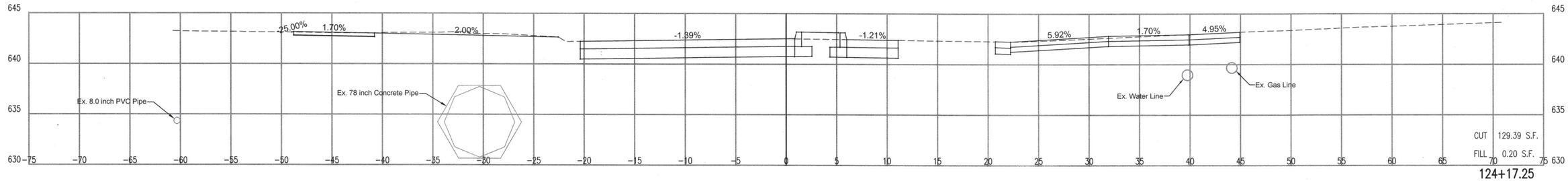

CUT 129.39 S.F.
FILL 0.20 S.F.

124+17.25

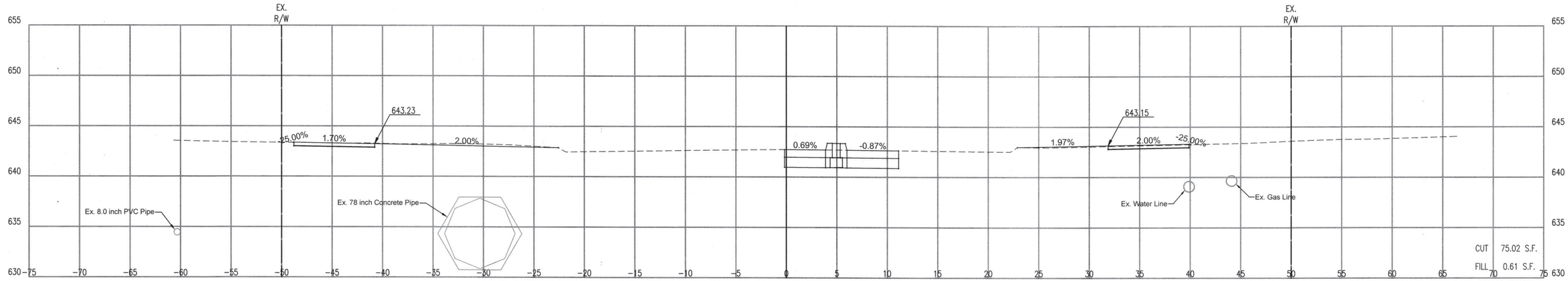

CUT 75.02 S.F.
FILL 0.61 S.F.

124+00.00

CROSS SECTIONS – 124+00.00 TO 124+50.00

PROJECT NO. 144200

ARTERIAL STREET REHABILITATION AND WATERLINE REPLACEMENT – 36TH ST. N. – MLK BLVD TO PEORIA AVE.

CITY OF TULSA, OKLAHOMA
ENGINEERING SERVICES DEPARTMENT

LICENSED PROFESSIONAL ENGINEER
JASON P. DICKMAN 27639
OKLAHOMA
07/19/2020

PLANS AND ESTIMATES PREPARED BY:

PEC PROFESSIONAL ENGINEERING CONSULTANTS, P.A.
1924 S. UTICA AVE., SUITE 1400
TULSA, OK 74104 918-664-5400 www.pec1.com

REVISION	BY	DATE

PLAN SCALE: 1" =

PROFILE SCALE:
HORIZONTAL: 1" = 5'
VERTICAL 1" = 5'

DRAWN	BFS	01/2020	APPROVED:
DESIGNED	JPD	01/2020	
SURVEY			
PROJ. MGR.			
LEAD ENGR.			
FIELD MGR.			

RECOMMENDED:

DESIGN MANAGER | CITY ENGINEER

FILE: | DRAWING: | DATE:

ATLAS PAGE NO: 218, 219, 281, 282 | SHEET 137 OF 165 SHEETS

$TIME$ $DATE$ $SCALE$ SCALE: $USER$ PLOTTED BY: XXX DSWG: $FILE$

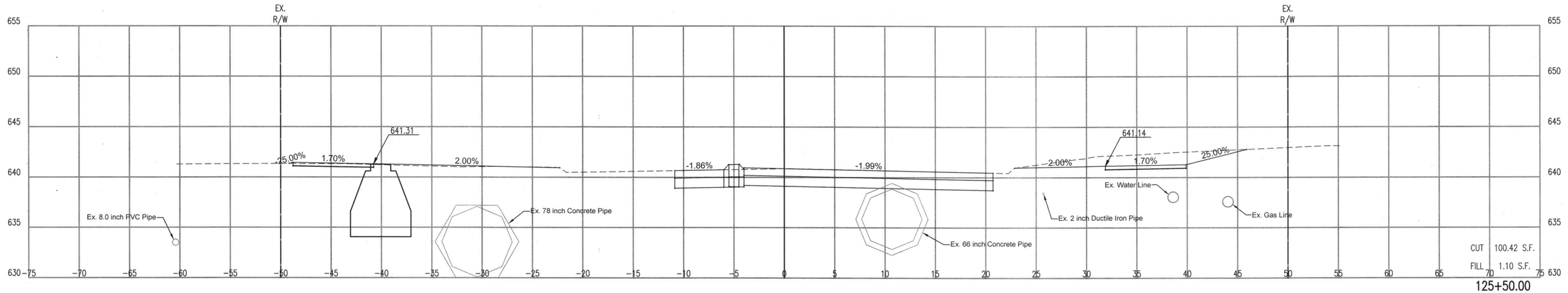

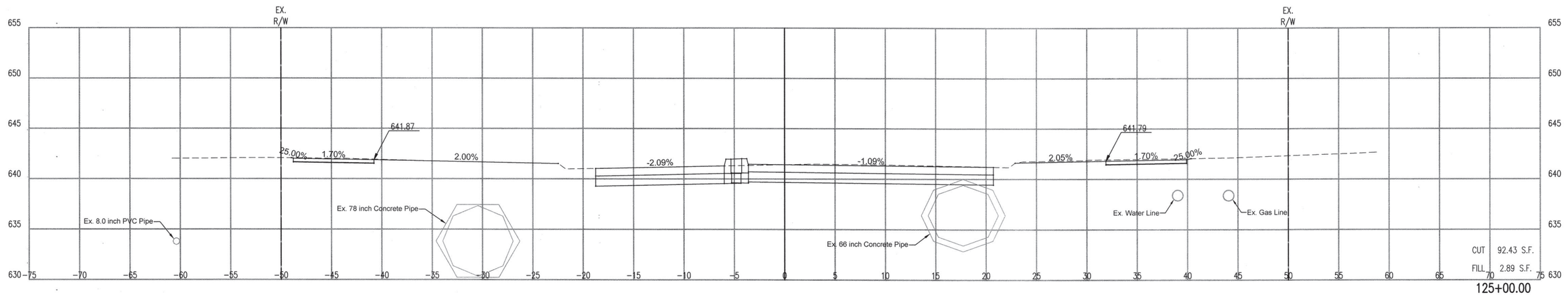

CROSS SECTIONS – 125+00.00 TO 125+50.00

PROJECT NO. 144200

ARTERIAL STREET REHABILITATION AND WATERLINE REPLACEMENT – 36TH ST. N. – MLK BLVD TO PEORIA AVE.

CITY OF TULSA, OKLAHOMA
ENGINEERING SERVICES DEPARTMENT

LICENSED PROFESSIONAL ENGINEER
JASON P. DICKMAN
27639
OKLAHOMA
07/19/2020

PLANS AND ESTIMATES PREPARED BY:

PEC PROFESSIONAL ENGINEERING CONSULTANTS, P.A.
1924 S. UTICA AVE., SUITE 1400
TULSA, OK 74104 918-664-5400 www.pec1.com

REVISION	BY	DATE

PLAN SCALE: 1" =	DRAWN	BFS	01/2020	APPROVED:
	DESIGNED	JPD	01/2020	
	SURVEY			
PROFILE SCALE:	PROJ. MGR.			
HORIZONTAL: 1" = 5'	LEAD ENGR.			
	FIELD MGR.			
VERTICAL 1" = 5'	RECOMMENDED: DESIGN MANAGER			CITY ENGINEER
FILE:	DRAWING:			DATE:
ATLAS PAGE NO: 218, 219, 281, 282				SHEET 138 OF 165 SHEETS

DSNR: XXX PLOTTED BY: $USER$ SCALE: $SCALE$ $DATE$ $TIME$ $FILE$

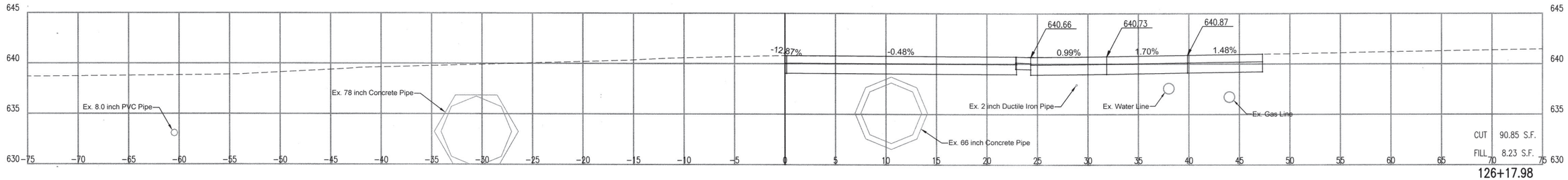

126+17.98

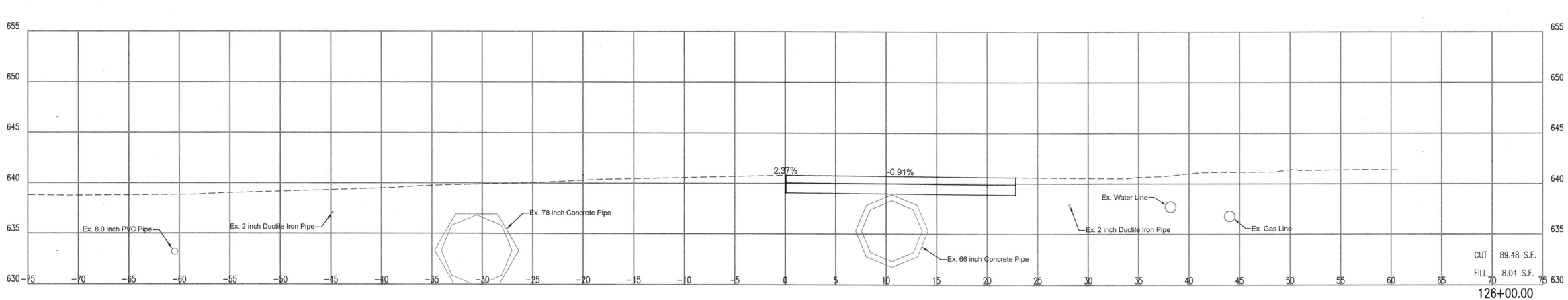

126+00.00

DSNR: XXX PLOTTED BY: $USER$ SCALE: $SCALE$ $DATE$ $TIME$

LICENSED PROFESSIONAL ENGINEER
JASON P. DICKMAN
27639
OKLAHOMA
07/19/2020

REVISION	BY	DATE

CROSS SECTIONS – 126+00.00 TO 126+17.98

PROJECT NO. 144200

ARTERIAL STREET REHABILITATION AND WATERLINE REPLACEMENT – 36TH ST. N. – MLK BLVD TO PEORIA AVE.

CITY OF TULSA, OKLAHOMA
ENGINEERING SERVICES DEPARTMENT

PLANS AND ESTIMATES PREPARED BY:

PEC PROFESSIONAL ENGINEERING CONSULTANTS, P.A.
1924 S. UTICA AVE., SUITE 1400
TULSA, OK 74104 918-864-5400 www.pec1.com

PLAN SCALE: 1" =	DRAWN	BFS	01/2020	APPROVED:
	DESIGNED	JPD	01/2020	
	SURVEY			
PROFILE SCALE:	PROJ. MGR.			
HORIZONTAL: 1" = 5'	LEAD ENGR.			
	FIELD MGR.			
VERTICAL 1" = 5'	RECOMMENDED: DESIGN MANAGER			CITY ENGINEER
FILE:	DRAWING:			DATE:
ATLAS PAGE NO: 218, 219, 281, 282				SHEET 139 OF 165 SHEETS

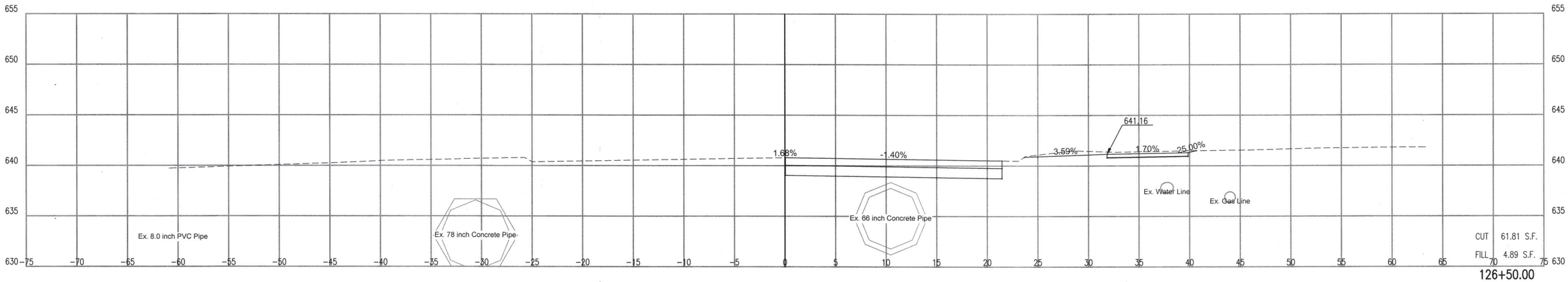

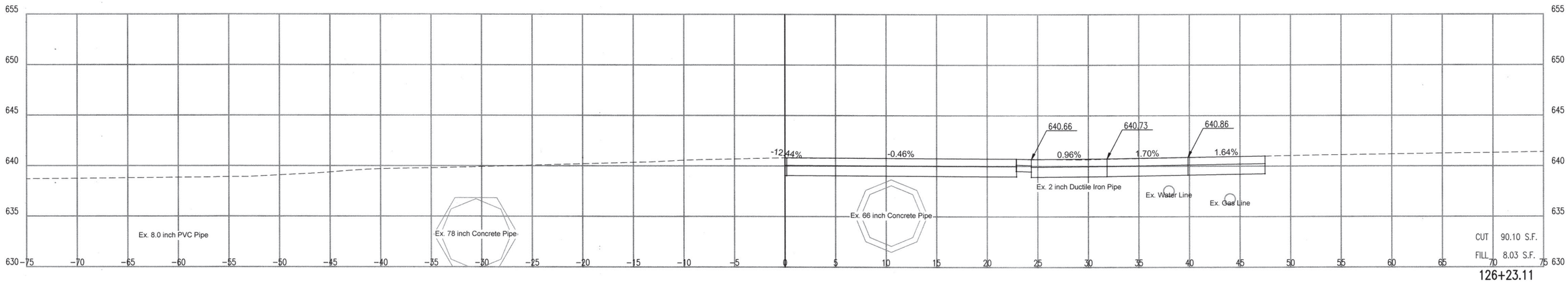

LICENSED PROFESSIONAL ENGINEER
JASON P. DICKMAN 27639
OKLAHOMA
07/19/2020

REVISION	BY	DATE

CROSS SECTIONS – 126+23.11 TO 126+50.00

PROJECT NO. 144200

ARTERIAL STREET REHABILITATION AND WATERLINE REPLACEMENT – 36TH ST. N. – MLK BLVD TO PEORIA AVE.

CITY OF TULSA, OKLAHOMA
ENGINEERING SERVICES DEPARTMENT

PLANS AND ESTIMATES PREPARED BY:

PEC PROFESSIONAL ENGINEERING CONSULTANTS, P.A.
1924 S. UTICA AVE., SUITE 1400
TULSA, OK 74104 918-684-5400 www.pec1.com

PLAN SCALE: 1" =	DRAWN	BFS	01/2020	APPROVED:
	DESIGNED	JPD	01/2020	
	SURVEY			
PROFILE SCALE:	PROJ. MGR.			
HORIZONTAL: 1" = 5'	LEAD ENGR.			
	FIELD MGR.			
VERTICAL 1" = 5'	RECOMMENDED: DESIGN MANAGER			CITY ENGINEER
FILE:	DRAWING:			DATE:
ATLAS PAGE NO: 218, 219, 281, 282				SHEET 140 OF 165 SHEETS

DSNR: XXX PLOTTED BY: $USER$ SCALE: $SCALE$ $DATE$ $TIME$
$FILE1$

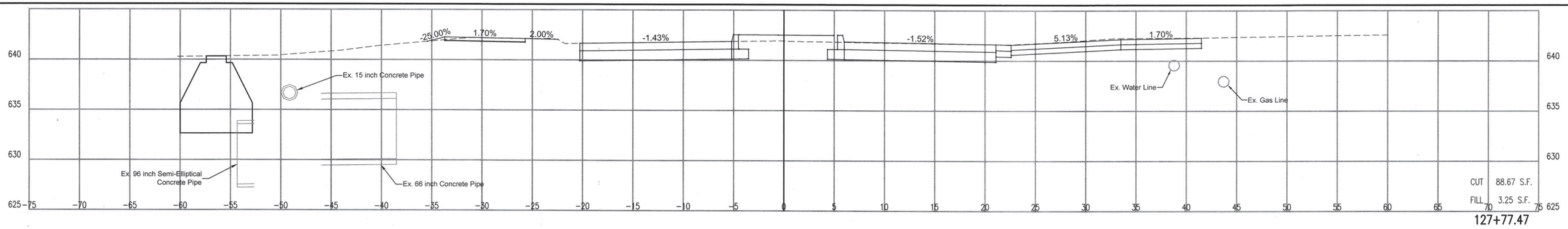

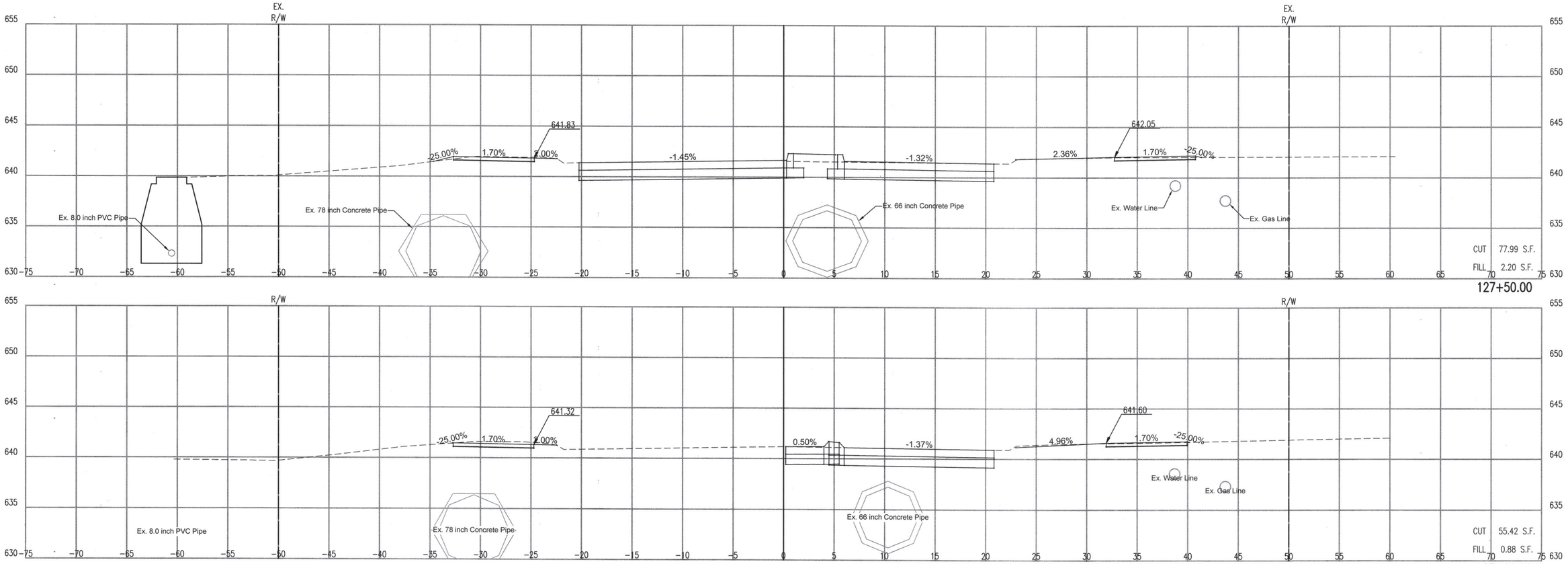

DSNR: XXX PLOTTED BY: $USER$ SCALE: $SCALE$ $DATE$ $TIME$ $FILE$

CROSS SECTIONS – 127+00.00 TO 127+77.47

PROJECT NO. 144200

ARTERIAL STREET REHABILITATION AND WATERLINE REPLACEMENT – 36TH ST. N. – MLK BLVD TO PEORIA AVE.

CITY OF TULSA, OKLAHOMA
ENGINEERING SERVICES DEPARTMENT

LICENSED PROFESSIONAL ENGINEER
JASON P. DICKMAN
27639
OKLAHOMA
07/19/2020

PLANS AND ESTIMATES PREPARED BY:

PEC PROFESSIONAL ENGINEERING CONSULTANTS, P.A.
1924 S. UTICA AVE., SUITE 1400
TULSA, OK 74104 918-664-5400 www.pec1.com

REVISION	BY	DATE

PLAN SCALE: 1" =	DRAWN	BFS	01/2020	APPROVED:
	DESIGNED	JPD	01/2020	
	SURVEY			
PROFILE SCALE:	PROJ. MGR.			
HORIZONTAL: 1" = 5'	LEAD ENGR.			
	FIELD MGR.			
VERTICAL 1" = 5'	RECOMMENDED:			
	DESIGN MANAGER			CITY ENGINEER
FILE:	DRAWING:			DATE:
ATLAS PAGE NO: 218, 219, 281, 282				SHEET 141 OF 165 SHEETS

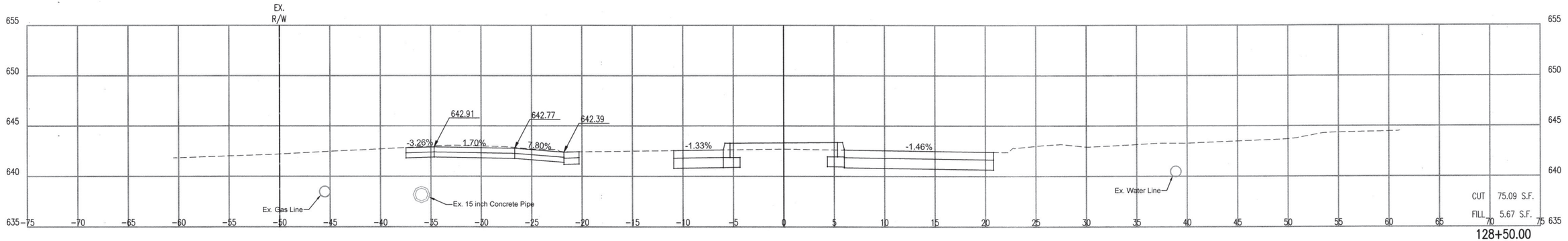

128+50.00

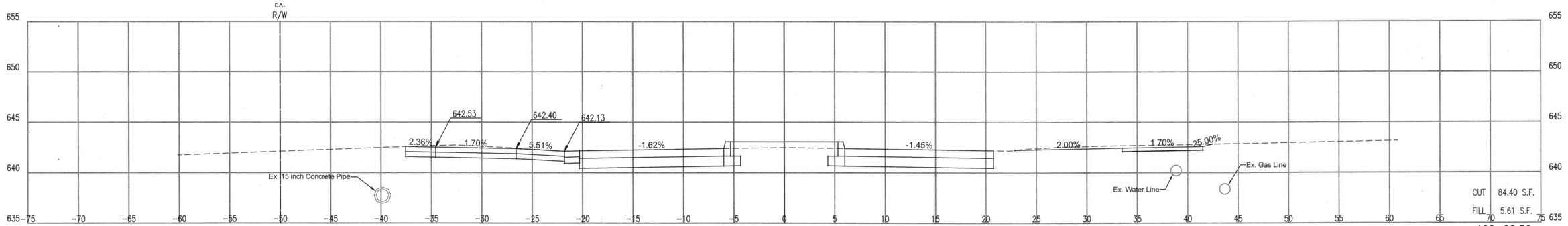

128+28.50

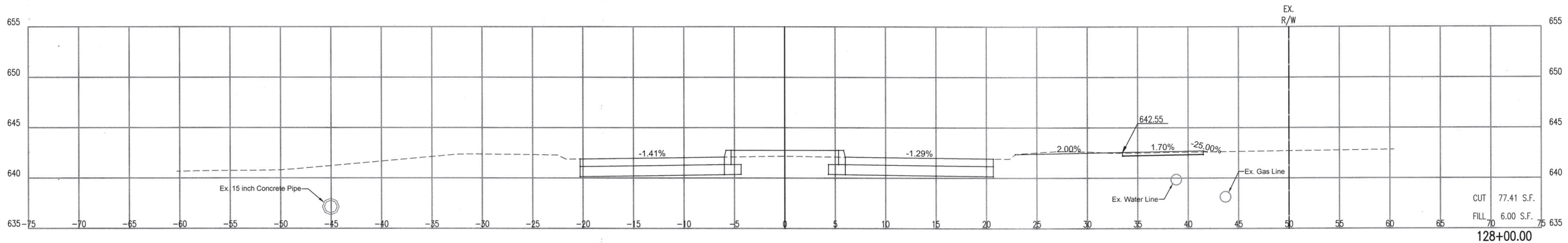

128+00.00

CROSS SECTIONS – 128+00.00 TO 128+50.00

PROJECT NO. 144200

ARTERIAL STREET REHABILITATION AND WATERLINE REPLACEMENT – 36TH ST. N. – MLK BLVD TO PEORIA AVE.

CITY OF TULSA, OKLAHOMA
ENGINEERING SERVICES DEPARTMENT

LICENSED PROFESSIONAL ENGINEER
JASON P. DICKMAN
27639
OKLAHOMA
07/19/2020

PLANS AND ESTIMATES PREPARED BY:

PEC PROFESSIONAL ENGINEERING CONSULTANTS, P.A.
1924 S. UTICA AVE., SUITE 1400
TULSA, OK 74104 918-664-5400 www.pec1.com

REVISION	BY	DATE

PLAN SCALE: 1" =

PROFILE SCALE:

HORIZONTAL: 1" = 5'

VERTICAL 1" = 5'

DRAWN	BFS	01/2020	APPROVED:
DESIGNED	JPD	01/2020	
SURVEY			
PROJ. MGR.			
LEAD ENGR.			
FIELD MGR.			
RECOMMENDED:			
DESIGN MANAGER			CITY ENGINEER

FILE: DRAWING: DATE:

ATLAS PAGE NO: 218, 219, 281, 282 SHEET 142 OF 165 SHEETS

$TIME$ $DATE$ $SCALE$ SCALE: $USER$ PLOTTED BY: XXX DSWG: $FILE$

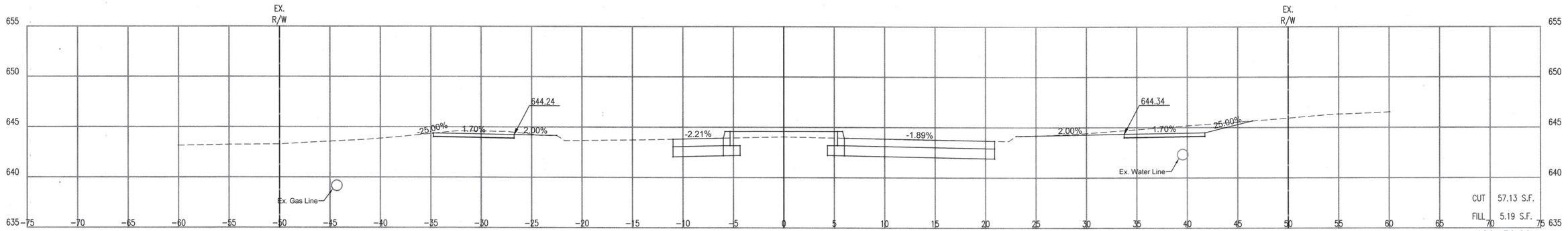

CUT 57.13 S.F.
FILL 5.19 S.F.

129+50.00

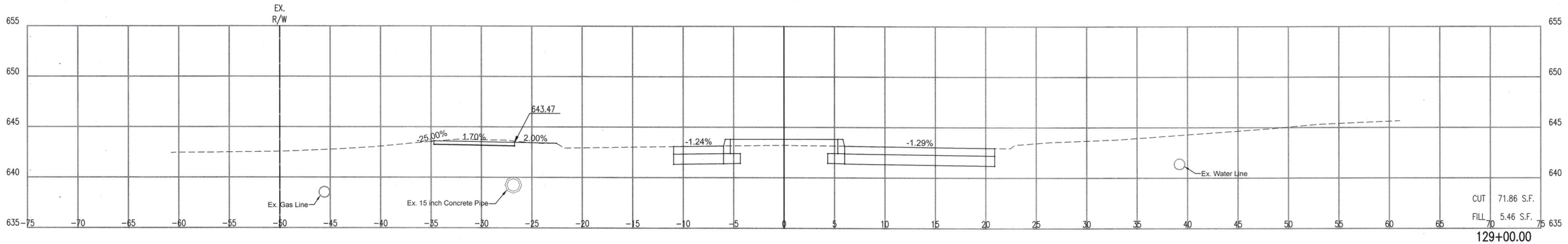

CUT 71.86 S.F.
FILL 5.46 S.F.

129+00.00

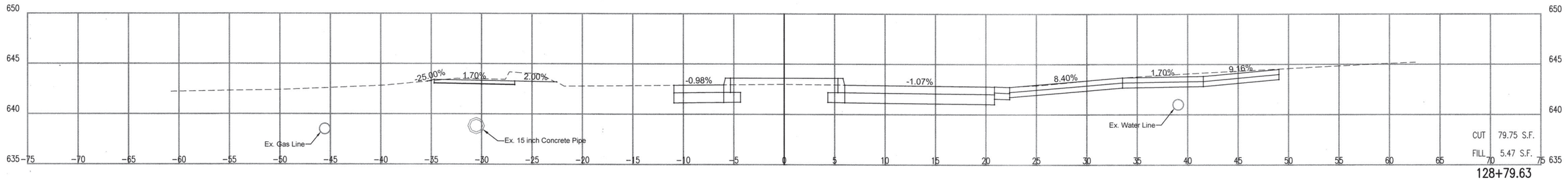

CUT 79.75 S.F.
FILL 5.47 S.F.

128+79.63

LICENSED PROFESSIONAL ENGINEER
JASON P. DICKMAN 27639
OKLAHOMA

07/19/2020

REVISION	BY	DATE

CROSS SECTIONS – 128+79.63 TO 129+50.00

PROJECT NO. 144200

ARTERIAL STREET REHABILITATION AND WATERLINE REPLACEMENT – 36TH ST. N. – MLK BLVD TO PEORIA AVE.

CITY OF TULSA, OKLAHOMA
ENGINEERING SERVICES DEPARTMENT

PLANS AND ESTIMATES PREPARED BY:

PEC PROFESSIONAL ENGINEERING CONSULTANTS, P.A.
1924 S. UTICA AVE., SUITE 1400
TULSA, OK 74104 918-864-5400 www.pec1.com

PLAN SCALE: 1" =	DRAWN	BFS	01/2020	APPROVED:
	DESIGNED	JPD	01/2020	
	SURVEY			
PROFILE SCALE:	PROJ. MGR.			
HORIZONTAL: 1" = 5'	LEAD ENGR.			
	FIELD MGR.			
VERTICAL 1" = 5'	RECOMMENDED:			
	DESIGN MANAGER			CITY ENGINEER
FILE:	DRAWING:			DATE:
ATLAS PAGE NO: 218, 219, 281, 282				SHEET 143 OF 165 SHEETS

DSWG: XXX PLOTTED BY: $USER$ SCALE: $SCALE$ $DATE$ $TIME$ $FILE$

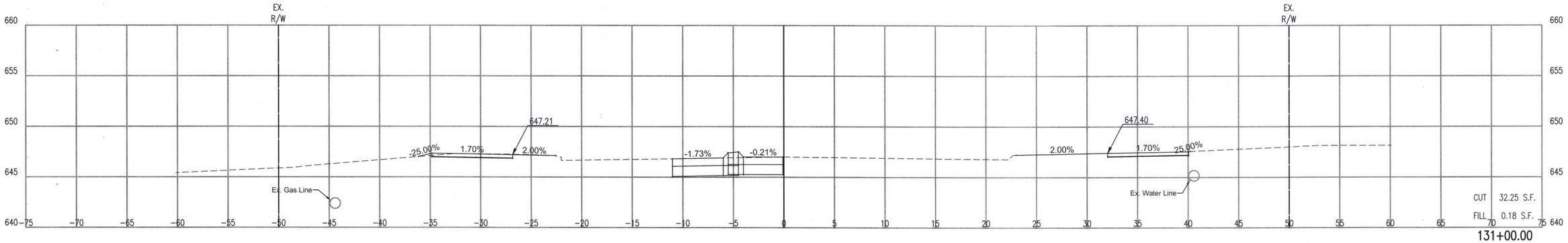

131+00.00

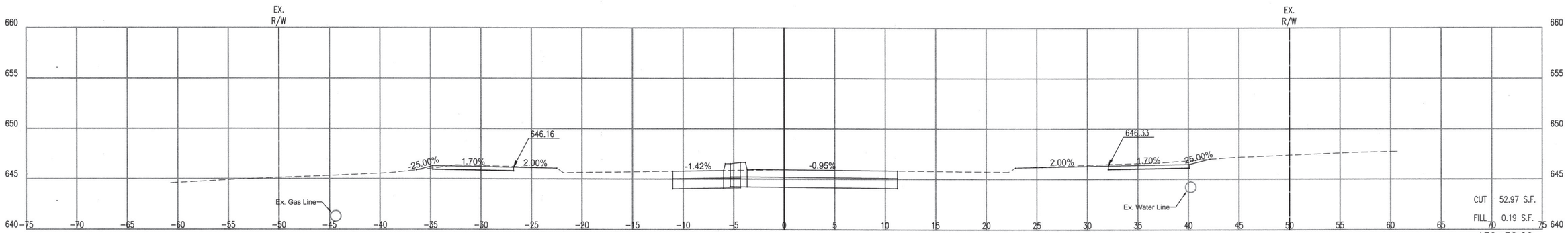

130+50.00

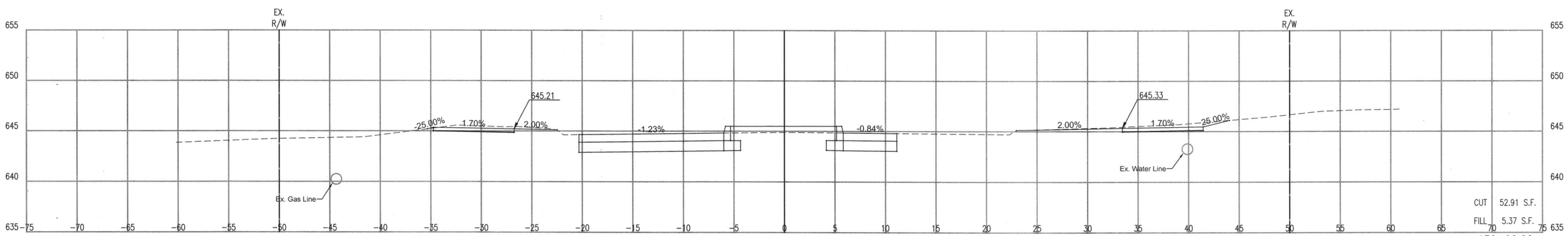

130+00.00

LICENSED PROFESSIONAL ENGINEER
JASON P. DICKMAN
27639
OKLAHOMA
07/19/2020

CROSS SECTIONS – 130+00.00 TO 131+00.00

PROJECT NO. 144200

ARTERIAL STREET REHABILITATION AND WATERLINE REPLACEMENT – 36TH ST. N. – MLK BLVD TO PEORIA AVE.

CITY OF TULSA, OKLAHOMA
ENGINEERING SERVICES DEPARTMENT

PLANS AND ESTIMATES PREPARED BY:

PEC PROFESSIONAL ENGINEERING CONSULTANTS, P.A.
1924 S. UTICA AVE., SUITE 1400
TULSA, OK 74104 918-664-5400 www.pec1.com

REVISION	BY	DATE

PLAN SCALE: 1" =	DRAWN		BFS	01/2020
	DESIGNED		JPD	01/2020
	SURVEY			
PROFILE SCALE:	PROJ. MGR.			
HORIZONTAL: 1" = 5'	LEAD ENGR.			
	FIELD MGR.			
VERTICAL 1" = 5'	RECOMMENDED: DESIGN MANAGER			

APPROVED: _____ CITY ENGINEER

FILE: DRAWING: DATE:

ATLAS PAGE NO: 218, 219, 281, 282

SHEET 144 OF 165 SHEETS

DSWG: XXX PLOTTED BY: $USER$ SCALE: $SCALE$ $DATE$ $TIME$
$FILE$

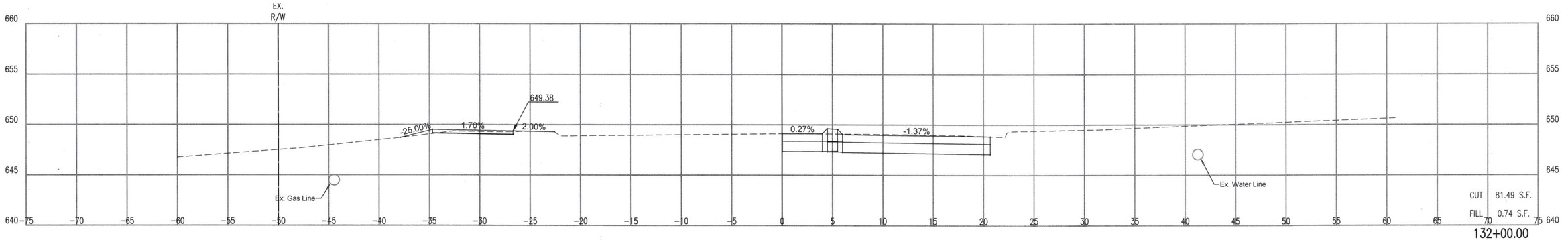

132+00.00

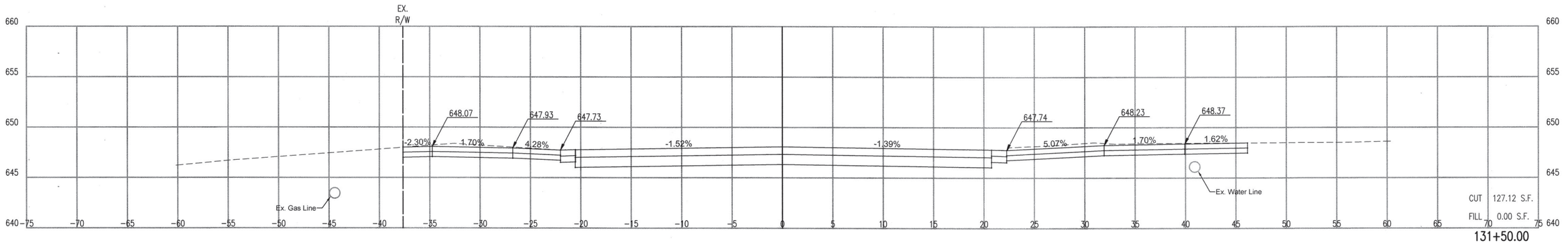

131+50.00

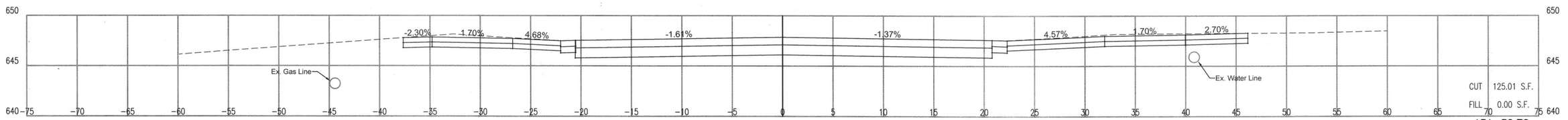

131+38.78

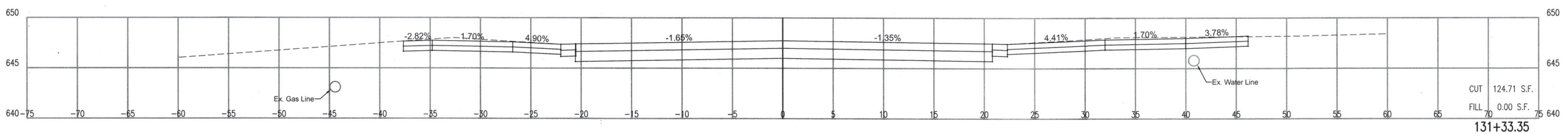

131+33.35

LICENSED PROFESSIONAL ENGINEER
JASON P. DICKMAN
27639
OKLAHOMA
07/19/2020

REVISION	BY	DATE

CROSS SECTIONS – 131+33.35 TO 132+00.00

PROJECT NO. 144200

ARTERIAL STREET REHABILITATION AND WATERLINE REPLACEMENT – 36TH ST. N. – MLK BLVD TO PEORIA AVE.

CITY OF TULSA, OKLAHOMA
ENGINEERING SERVICES DEPARTMENT

PLANS AND ESTIMATES PREPARED BY: PEC — PROFESSIONAL ENGINEERING CONSULTANTS, P.A. 1924 S. UTICA AVE., SUITE 1400 TULSA, OK 74104 918-664-5400 www.pec1.com

PLAN SCALE: 1" =	DRAWN	BFS	01/2020	APPROVED:
	DESIGNED	JPD	01/2020	
	SURVEY			
PROFILE SCALE:	PROJ. MGR.			
HORIZONTAL: 1" = 5'	LEAD ENGR.			
	FIELD MGR.			
VERTICAL 1" = 5'	RECOMMENDED: DESIGN MANAGER			CITY ENGINEER
FILE:	DRAWING:			DATE:
ATLAS PAGE NO: 218, 219, 281, 282				SHEET 145 OF 165 SHEETS

DSNR: XXX PLOTTED BY: $USER$ SCALE: $SCALE$ $DATE$ $TIME$ $FILE$

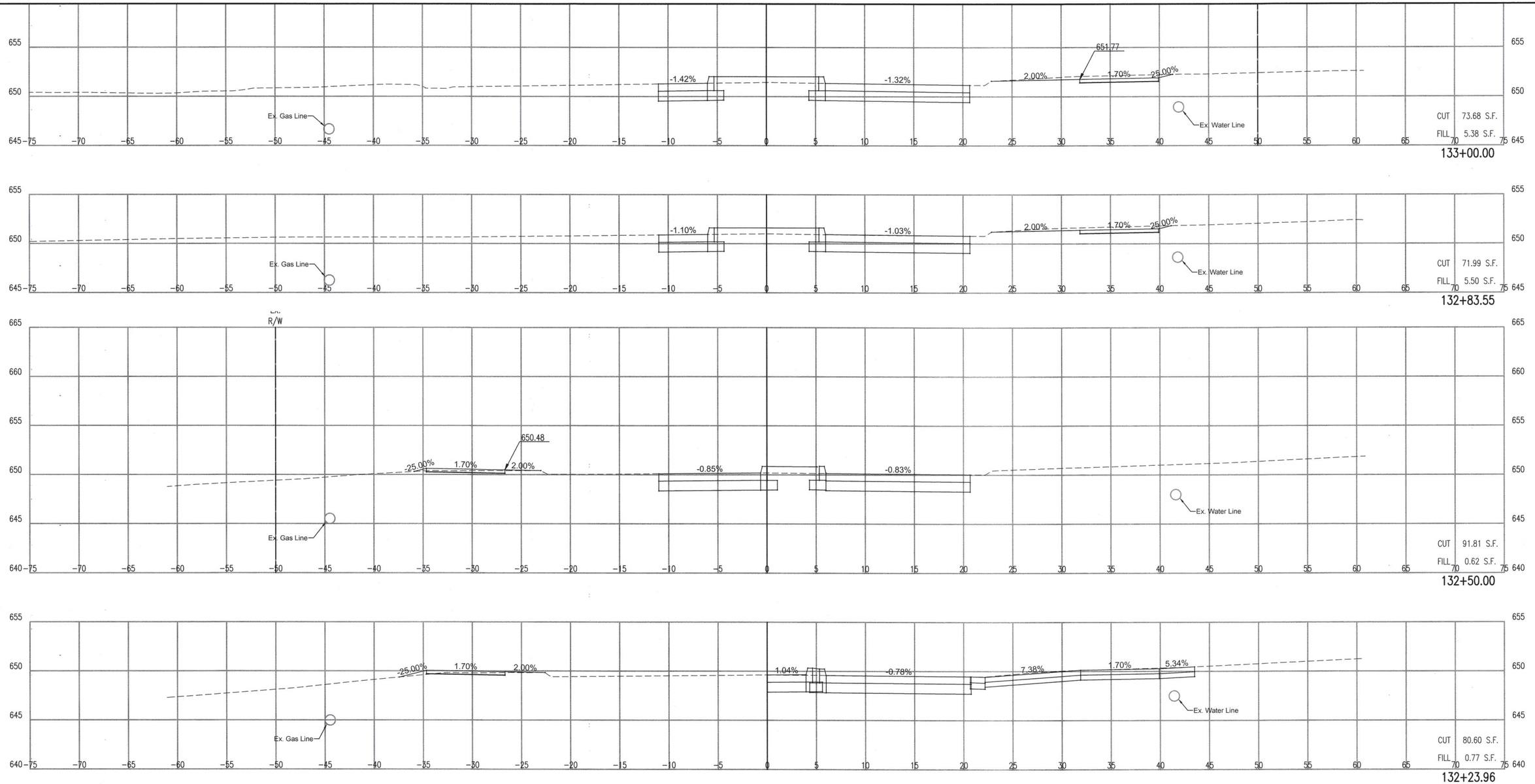

DSWG: XXX PLOTTED BY: $USER$ SCALE: $SCALE$ $DATE$ $TIME$

LICENSED PROFESSIONAL ENGINEER
JASON P. DICKMAN
27639
OKLAHOMA
07/19/2020

REVISION	BY	DATE

CROSS SECTIONS – 132+23.96 TO 133+00.00

PROJECT NO. 144200

ARTERIAL STREET REHABILITATION AND WATERLINE REPLACEMENT – 36TH ST. N. – MLK BLVD TO PEORIA AVE.

CITY OF TULSA, OKLAHOMA
ENGINEERING SERVICES DEPARTMENT

PLANS AND ESTIMATES PREPARED BY: PEC — PROFESSIONAL ENGINEERING CONSULTANTS, P.A. 1924 S. UTICA AVE., SUITE 1400 TULSA, OK 74104 918-894-5400 www.pec1.com

PLAN SCALE: 1" =	DRAWN	BFS	01/2020	APPROVED:
	DESIGNED	JPD	01/2020	
	SURVEY			
PROFILE SCALE:	PROJ. MGR.			
HORIZONTAL: 1" = 5'	LEAD ENGR.			
	FIELD MGR.			
VERTICAL 1" = 5'	RECOMMENDED: DESIGN MANAGER			CITY ENGINEER
FILE:	DRAWING:			DATE:
ATLAS PAGE NO: 218, 219, 281, 282				SHEET 146 OF 165 SHEETS

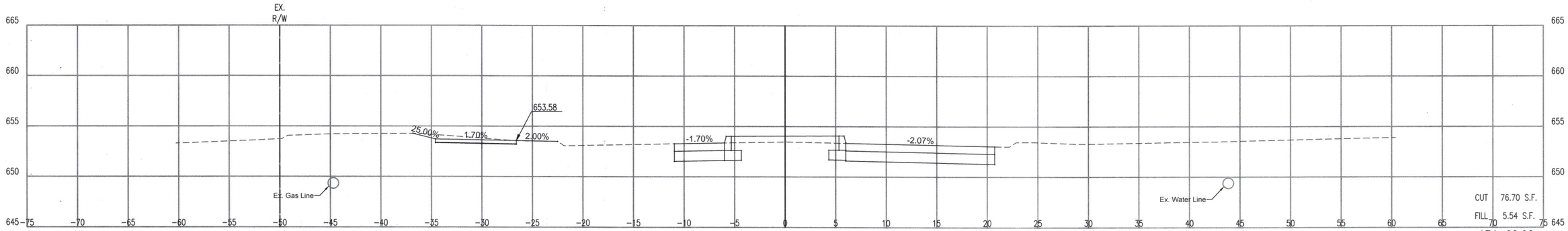

134+00.00

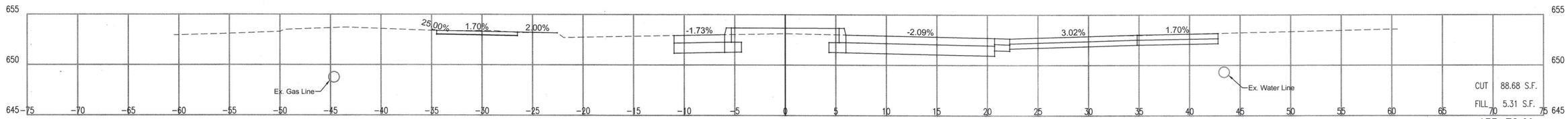

133+78.69

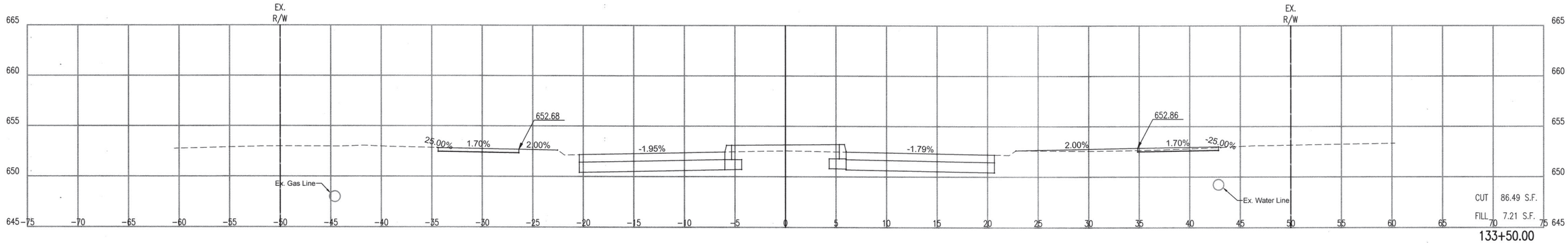

133+50.00

$TIME$ $DATE$ $SCALE$ $USER$ SCALE: DSNR: XXX PLOTTED BY: $FILE$

CROSS SECTIONS – 133+50.00 TO 134+00.00

PROJECT NO. 144200

ARTERIAL STREET REHABILITATION AND WATERLINE REPLACEMENT – 36TH ST. N. – MLK BLVD TO PEORIA AVE.

CITY OF TULSA, OKLAHOMA
ENGINEERING SERVICES DEPARTMENT

LICENSED PROFESSIONAL ENGINEER
JASON P. DICKMAN 27639
OKLAHOMA
07/19/2020

PLANS AND ESTIMATES PREPARED BY:
PEC PROFESSIONAL ENGINEERING CONSULTANTS, P.A.
1924 S. UTICA AVE., SUITE 1400
TULSA, OK 74104 918-664-5400 www.pec1.com

REVISION	BY	DATE

PLAN SCALE: 1" =
PROFILE SCALE:
HORIZONTAL: 1" = 5'
VERTICAL 1" = 5'

DRAWN	BFS	01/2020	APPROVED:
DESIGNED	JPD	01/2020	
SURVEY			
PROJ. MGR.			
LEAD ENGR.			
FIELD MGR.			

RECOMMENDED:
DESIGN MANAGER
CITY ENGINEER

FILE: DRAWING: DATE:

ATLAS PAGE NO: 218, 219, 281, 282

SHEET 147 OF 165 SHEETS

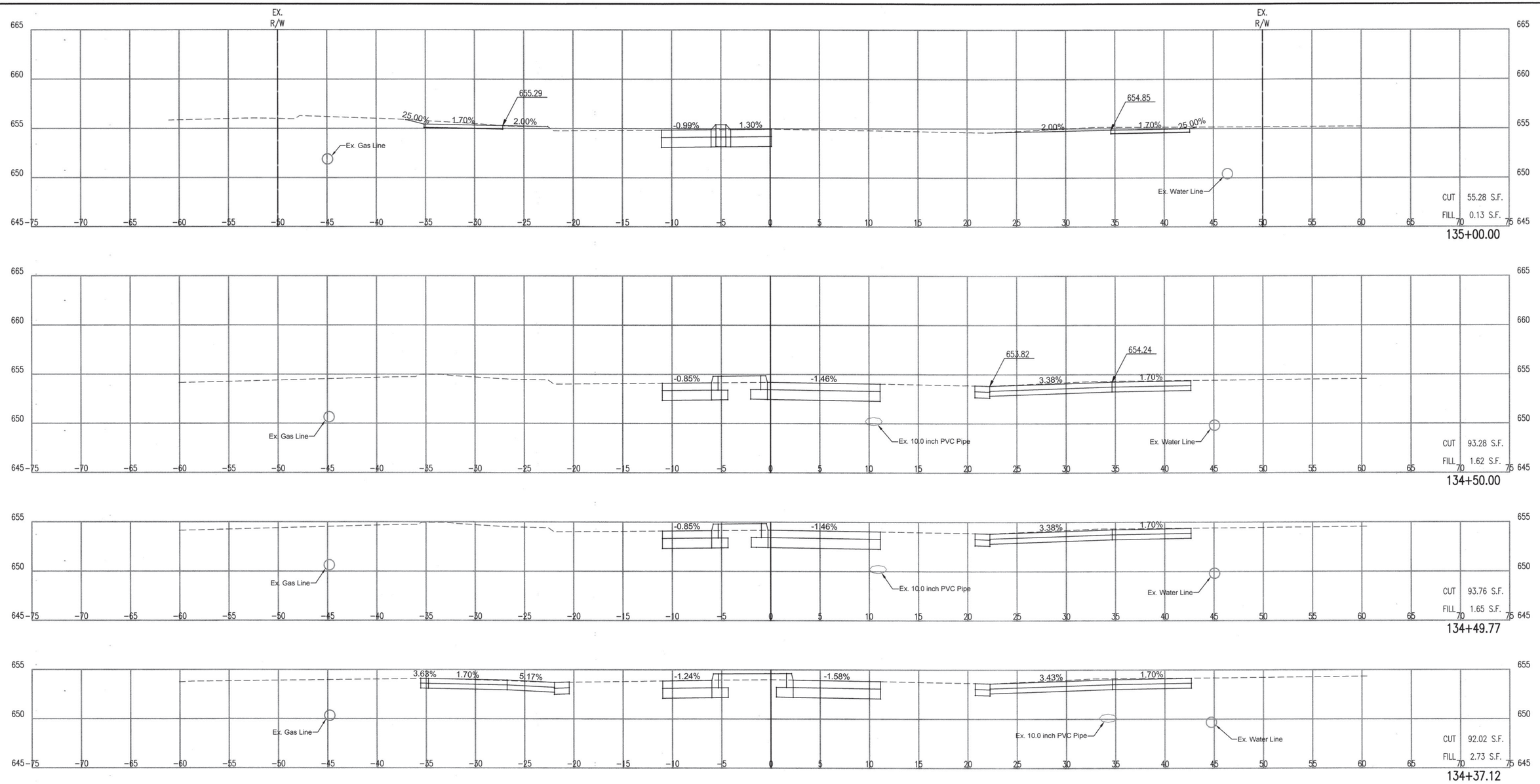

DSNR: XXX PLOTTED BY: $USER$ SCALE: $SCALE$ $DATE$ $TIME$
$FILE$

CROSS SECTIONS – 134+37.12 TO 135+00.00

PROJECT NO. 144200

ARTERIAL STREET REHABILITATION AND WATERLINE REPLACEMENT – 36TH ST. N. – MLK BLVD TO PEORIA AVE.

CITY OF TULSA, OKLAHOMA
ENGINEERING SERVICES DEPARTMENT

LICENSED PROFESSIONAL ENGINEER
JASON P. DICKMAN
27639
OKLAHOMA
07/19/2020

PLANS AND ESTIMATES PREPARED BY:

PEC PROFESSIONAL ENGINEERING CONSULTANTS, P.A.
1924 S. UTICA AVE., SUITE 1400
TULSA, OK 74104 918-664-5400 www.pec1.com

REVISION	BY	DATE

PLAN SCALE: 1" =	DRAWN	BFS	01/2020
	DESIGNED	JPD	01/2020
	SURVEY		
PROFILE SCALE:	PROJ. MGR.		
HORIZONTAL: 1" = 5'	LEAD ENGR.		
	FIELD MGR.		
VERTICAL 1" = 5'	RECOMMENDED: DESIGN MANAGER		

APPROVED: CITY ENGINEER

FILE: DRAWING: DATE:

ATLAS PAGE NO: 218, 219, 281, 282

SHEET 148 OF 165 SHEETS

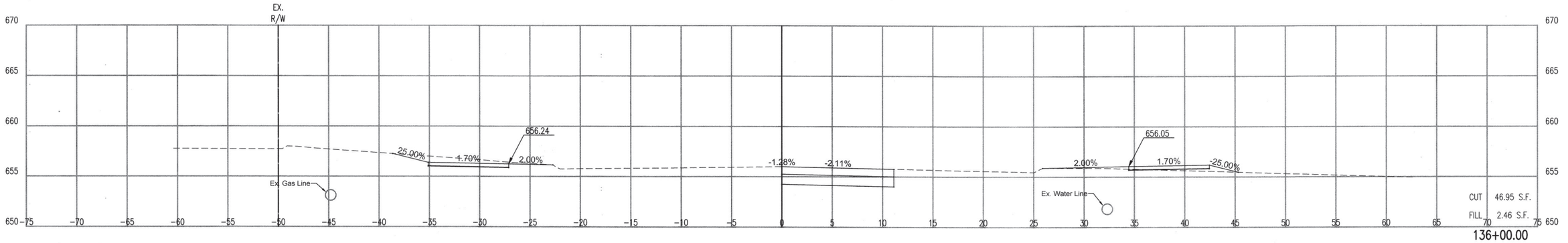

136+00.00

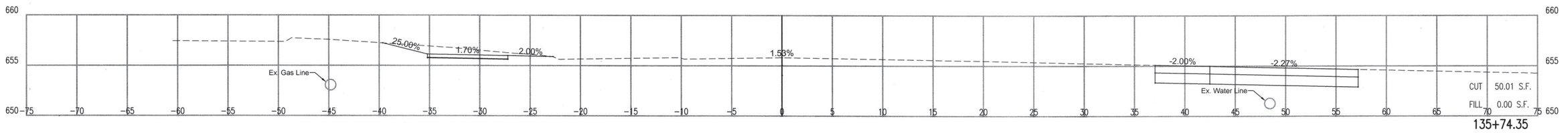

135+74.35

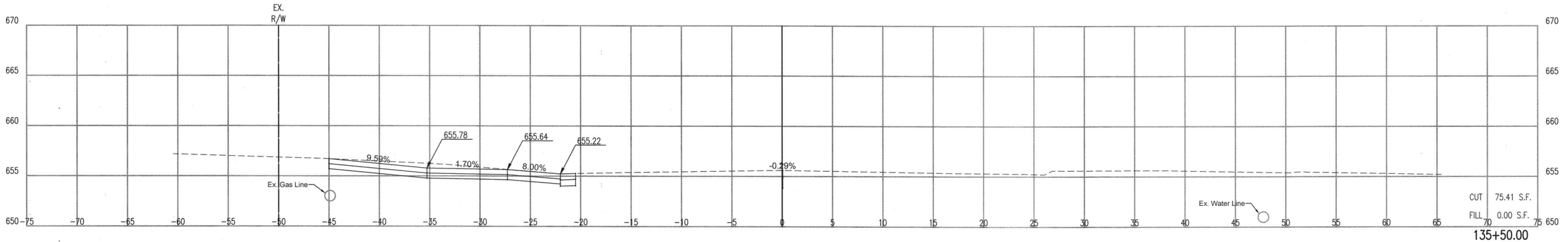

135+50.00

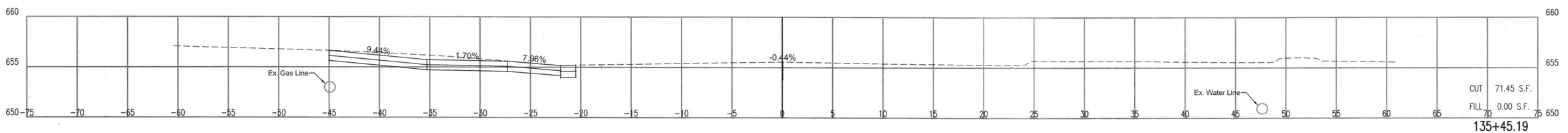

135+45.19

DGNR: XXX PLOTTED BY: $FILE$ $USER$ SCALE: $SCALE$ $DATE$ $TIME$

CROSS SECTIONS – 135+45.19 TO 136+00.00

PROJECT NO. 144200

ARTERIAL STREET REHABILITATION AND WATERLINE REPLACEMENT – 36TH ST. N. – MLK BLVD TO PEORIA AVE.

CITY OF TULSA, OKLAHOMA
ENGINEERING SERVICES DEPARTMENT

LICENSED PROFESSIONAL ENGINEER
JASON P. DICKMAN
27639
OKLAHOMA
07/19/2020

PLANS AND ESTIMATES PREPARED BY:
PEC PROFESSIONAL ENGINEERING CONSULTANTS, P.A.
1924 S. UTICA AVE., SUITE 1400
TULSA, OK 74104 918-684-5400 www.pec1.com

REVISION	BY	DATE

PLAN SCALE: 1" =	DRAWN	BFS	01/2020	APPROVED:
	DESIGNED	JPD	01/2020	
	SURVEY			
PROFILE SCALE:	PROJ. MGR.			
HORIZONTAL: 1" = 5'	LEAD ENGR.			
	FIELD MGR.			
VERTICAL 1" = 5'	RECOMMENDED:			
	DESIGN MANAGER			CITY ENGINEER
FILE:	DRAWING:			DATE:
ATLAS PAGE NO: 218, 219, 281, 282				SHEET 149 OF 165 SHEETS

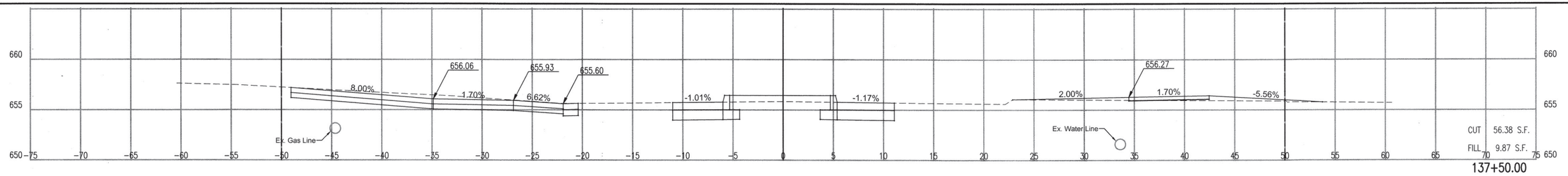

137+50.00

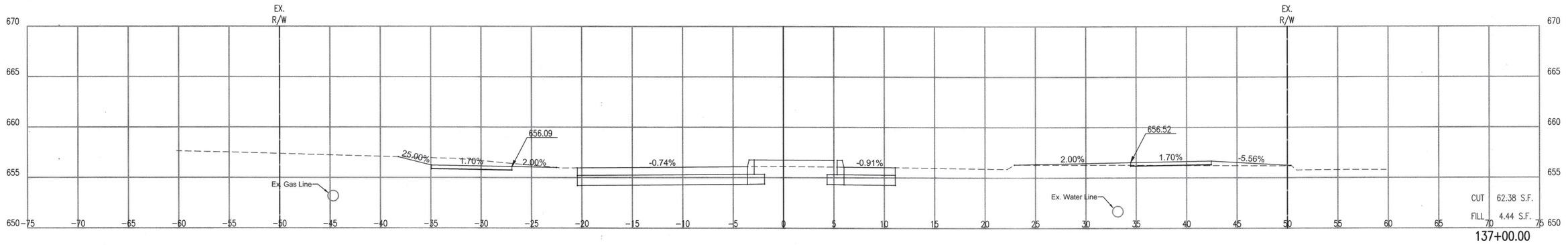

137+00.00

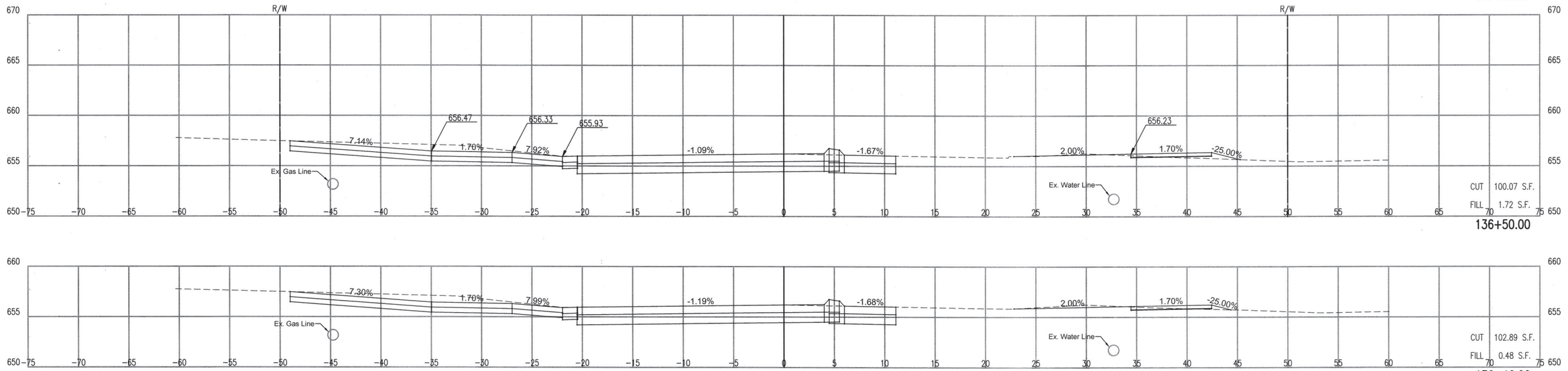

136+50.00

136+46.00

CROSS SECTIONS – 136+46.00 TO 137+50.00

PROJECT NO. 144200

ARTERIAL STREET REHABILITATION AND WATERLINE REPLACEMENT – 36TH ST. N. – MLK BLVD TO PEORIA AVE.

CITY OF TULSA, OKLAHOMA
ENGINEERING SERVICES DEPARTMENT

LICENSED PROFESSIONAL ENGINEER
JASON P. DICKMAN
27639
OKLAHOMA
07/19/2020

PLANS AND ESTIMATES PREPARED BY:

PEC PROFESSIONAL ENGINEERING CONSULTANTS, P.A.
1924 S. UTICA AVE., SUITE 1400
TULSA, OK 74104 918-684-5400 www.pec1.com

REVISION	BY	DATE

PLAN SCALE: 1" =

PROFILE SCALE:
HORIZONTAL: 1" = 5'
VERTICAL 1" = 5'

DRAWN	BFS	01/2020	APPROVED:
DESIGNED	JPD	01/2020	
SURVEY			
PROJ. MGR.			
LEAD ENGR.			
FIELD MGR.			

RECOMMENDED:
DESIGN MANAGER
CITY ENGINEER

FILE: DRAWING: DATE:

ATLAS PAGE NO: 218, 219, 281, 282

SHEET 150 OF 165 SHEETS

$TIME$ $DATE$ $SCALE$ SCALE: $USER$ PLOTTED BY: XXX DSNR: $FILE$

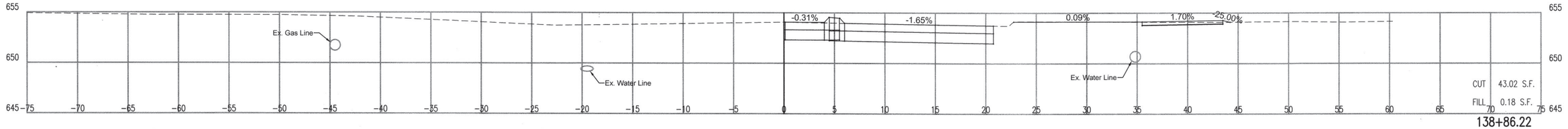

CUT 43.02 S.F.
FILL 0.18 S.F.

138+86.22

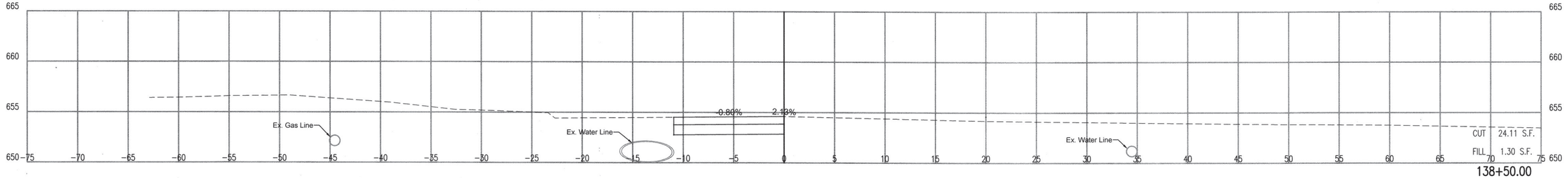

CUT 24.11 S.F.
FILL 1.30 S.F.

138+50.00

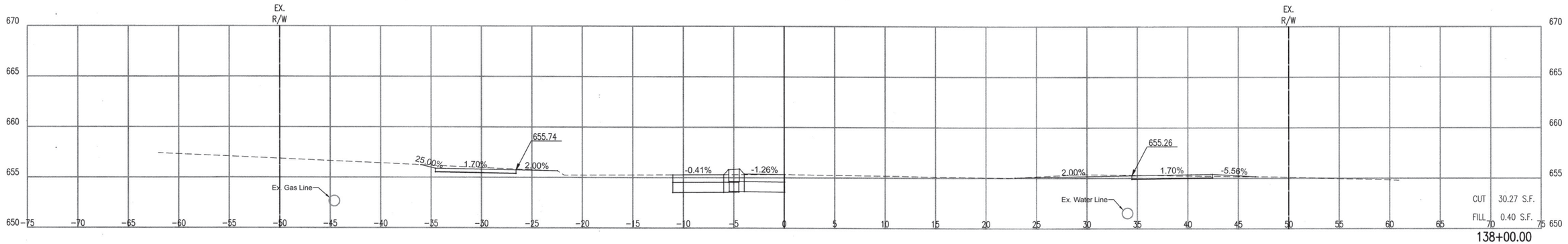

CUT 30.27 S.F.
FILL 0.40 S.F.

138+00.00

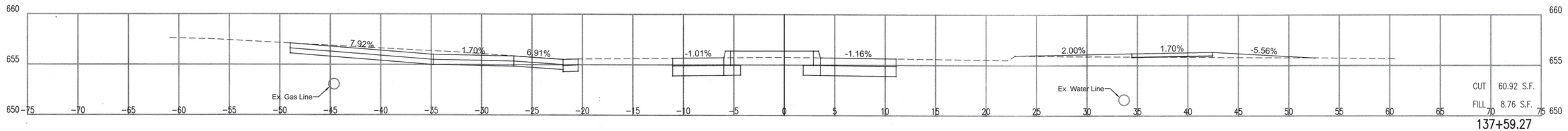

CUT 60.92 S.F.
FILL 8.76 S.F.

137+59.27

LICENSED PROFESSIONAL ENGINEER
JASON P. DICKMAN
27639
OKLAHOMA

07/19/2020

REVISION	BY	DATE

CROSS SECTIONS – 137+59.27 TO 138+86.22

PROJECT NO. 144200

ARTERIAL STREET REHABILITATION AND WATERLINE REPLACEMENT – 36TH ST. N. – MLK BLVD TO PEORIA AVE.

CITY OF TULSA, OKLAHOMA
ENGINEERING SERVICES DEPARTMENT

PLANS AND ESTIMATES PREPARED BY:

PEC
PROFESSIONAL ENGINEERING CONSULTANTS, P.A.
1924 S. UTICA AVE., SUITE 1400
TULSA, OK 74104 918-664-5400 www.pec1.com

PLAN SCALE: 1" =	DRAWN	BFS	01/2020	APPROVED:
	DESIGNED	JPD	01/2020	
	SURVEY			
PROFILE SCALE:	PROJ. MGR.			
HORIZONTAL: 1" = 5'	LEAD ENGR.			
	FIELD MGR.			
VERTICAL 1" = 5'	RECOMMENDED:			
	DESIGN MANAGER			CITY ENGINEER
FILE:	DRAWING:			DATE:
ATLAS PAGE NO: 218, 219, 281, 282				SHEET 151 OF 165 SHEETS

DSNR: XXX PLOTTED BY: $USER$ SCALE: $SCALE$ $DATE$ $TIME$ $FILE$

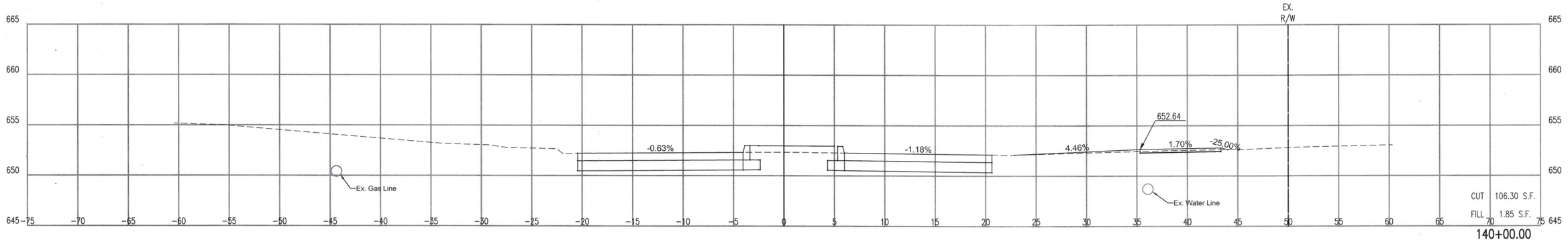

140+00.00

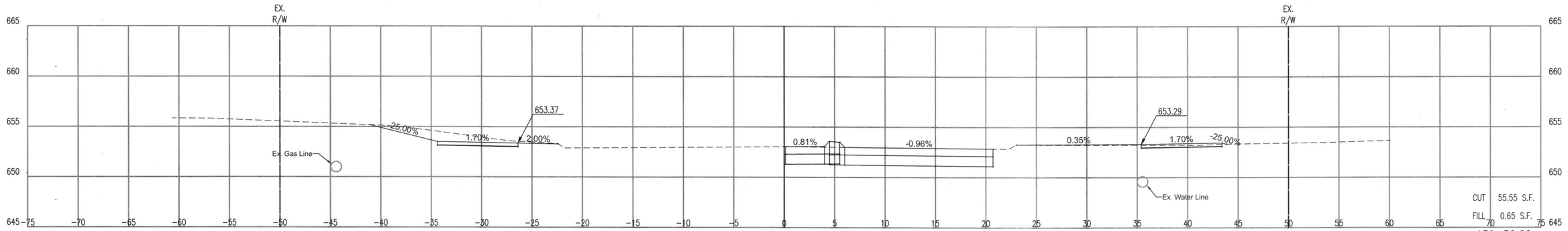

139+50.00

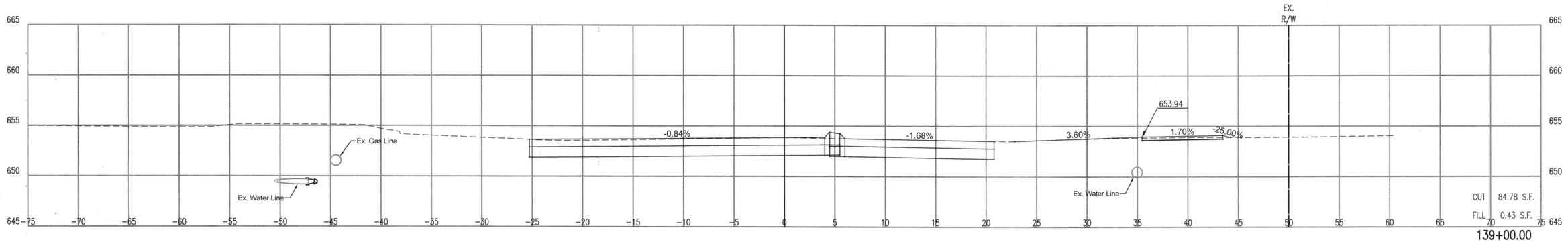

139+00.00

REVISION	BY	DATE

LICENSED PROFESSIONAL ENGINEER
JASON P. DICKMAN
27639
OKLAHOMA

07/19/2020

CROSS SECTIONS – 139+00.00 TO 140+00.00

PROJECT NO. 144200

ARTERIAL STREET REHABILITATION AND WATERLINE REPLACEMENT – 36TH ST. N. – MLK BLVD TO PEORIA AVE.

CITY OF TULSA, OKLAHOMA
ENGINEERING SERVICES DEPARTMENT

PLANS AND ESTIMATES PREPARED BY:

PEC
PROFESSIONAL ENGINEERING CONSULTANTS, P.A.
1924 S. UTICA AVE., SUITE 1400
TULSA, OK 74104 918-664-5400 www.pec1.com

PLAN SCALE: 1" =	DRAWN	BFS	01/2020	APPROVED:
	DESIGNED	JPD	01/2020	
	SURVEY			
PROFILE SCALE:	PROJ. MGR.			
HORIZONTAL: 1" = 5'	LEAD ENGR.			
	FIELD MGR.			
VERTICAL 1" = 5'	RECOMMENDED:			
	DESIGN MANAGER			CITY ENGINEER
FILE:	DRAWING:			DATE:
ATLAS PAGE NO: 218, 219, 281, 282				SHEET 152 OF 165 SHEETS

DSNR: XXX PLOTTED BY: $USER$ SCALE: $SCALE$ $DATE$ $TIME$
$FILE$

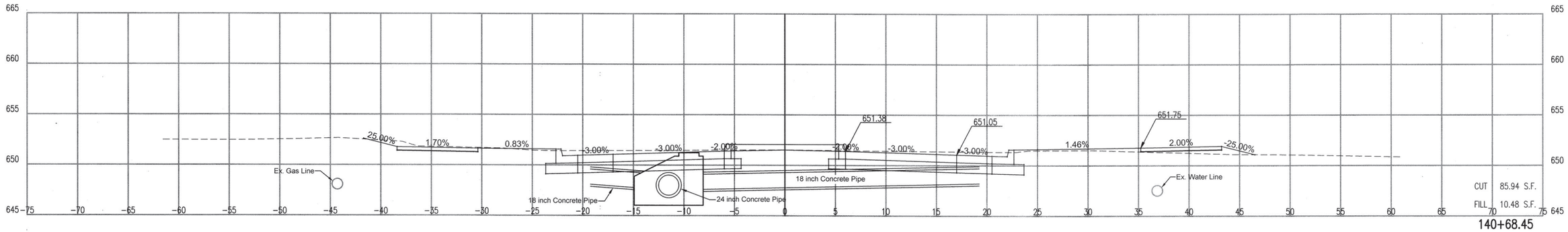

140+68.45

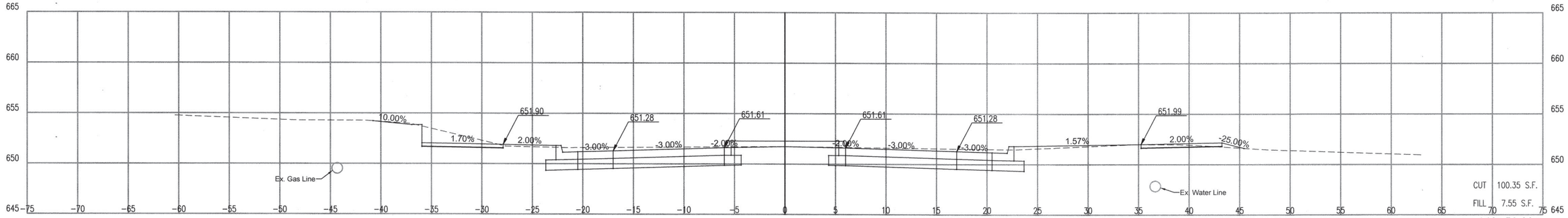

140+50.00

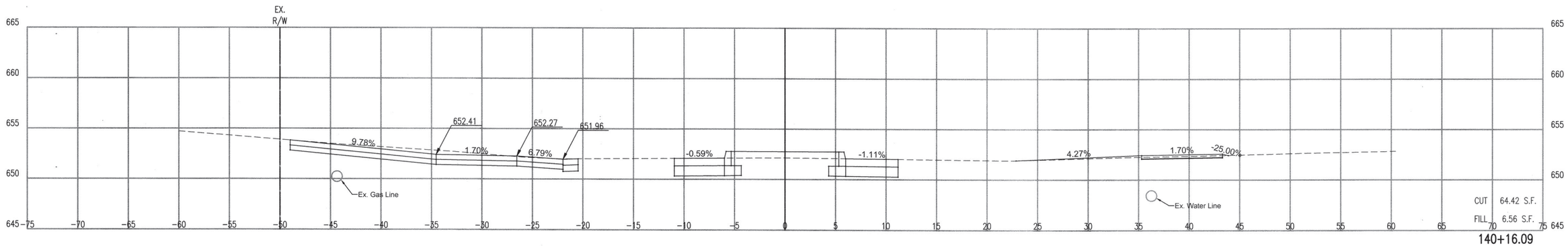

140+16.09

CROSS SECTIONS – 140+16.09 TO 140+68.45

PROJECT NO. 144200

ARTERIAL STREET REHABILITATION AND WATERLINE REPLACEMENT – 36TH ST. N. – MLK BLVD TO PEORIA AVE.

CITY OF TULSA, OKLAHOMA
ENGINEERING SERVICES DEPARTMENT

LICENSED PROFESSIONAL ENGINEER
JASON P. DICKMAN
27639
OKLAHOMA
07/19/2020

PLANS AND ESTIMATES PREPARED BY:
PEC PROFESSIONAL ENGINEERING CONSULTANTS, P.A.
1924 S. UTICA AVE., SUITE 1400
TULSA, OK 74104 918-664-5400 www.pec1.com

REVISION	BY	DATE

PLAN SCALE: 1" =
PROFILE SCALE:
HORIZONTAL: 1" = 5'
VERTICAL 1" = 5'

DRAWN	BFS	01/2020	APPROVED:
DESIGNED	JPD	01/2020	
SURVEY			
PROJ. MGR.			
LEAD ENGR.			
FIELD MGR.			

RECOMMENDED:
DESIGN MANAGER
CITY ENGINEER

FILE: DRAWING: DATE:

ATLAS PAGE NO: 218, 219, 281, 282 SHEET 153 OF 165 SHEETS

DSNR: XXX PLOTTED BY: $USER$ SCALE: $SCALE$ $DATE$ $TIME$
$FILE$

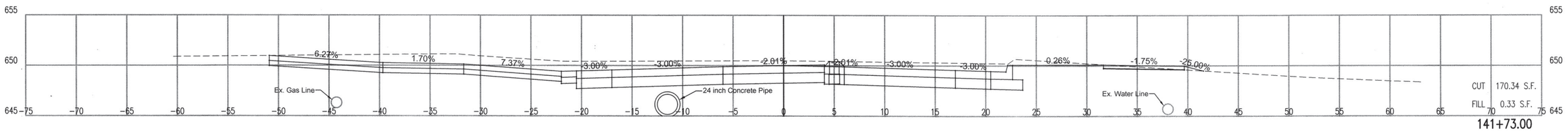

CUT 170.34 S.F.
FILL 0.33 S.F.

141+73.00

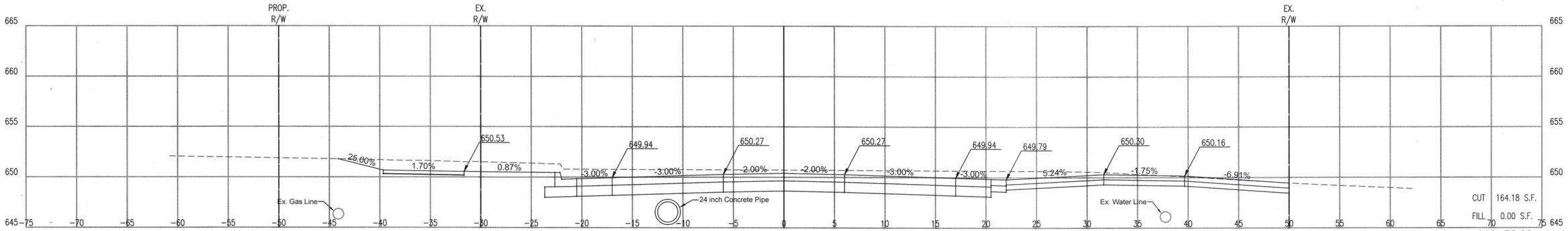

CUT 164.18 S.F.
FILL 0.00 S.F.

141+50.00

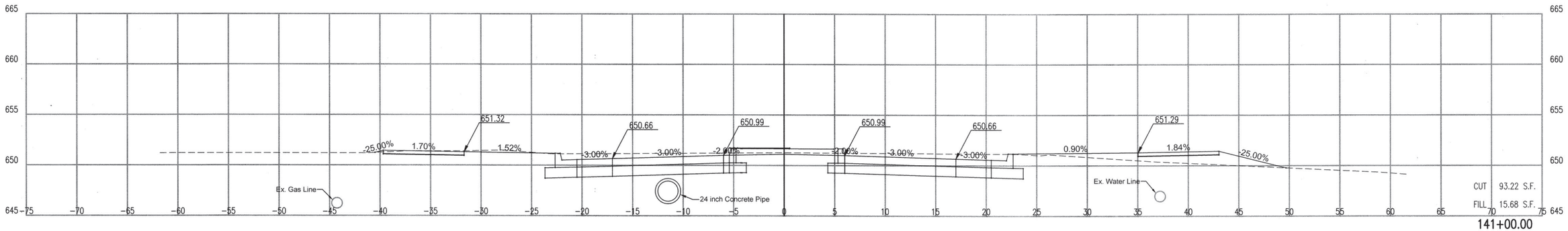

CUT 93.22 S.F.
FILL 15.68 S.F.

141+00.00

JASON P. DICKMAN 27639
LICENSED PROFESSIONAL ENGINEER OKLAHOMA

07/19/2020

CROSS SECTIONS – 141+00.00 TO 141+73.00

PROJECT NO. 144200

ARTERIAL STREET REHABILITATION AND WATERLINE REPLACEMENT – 36TH ST. N. – MLK BLVD TO PEORIA AVE.

CITY OF TULSA, OKLAHOMA
ENGINEERING SERVICES DEPARTMENT

PLANS AND ESTIMATES PREPARED BY:

PEC PROFESSIONAL ENGINEERING CONSULTANTS, P.A.
1924 S. UTICA AVE., SUITE 1400
TULSA, OK 74104 918-664-5400 www.pec1.com

REVISION	BY	DATE

PLAN SCALE: 1" =
PROFILE SCALE:
HORIZONTAL: 1" = 5'
VERTICAL 1" = 5'

DRAWN	BFS	01/2020	APPROVED:
DESIGNED	JPD	01/2020	
SURVEY			
PROJ. MGR.			
LEAD ENGR.			
FIELD MGR.			

RECOMMENDED:
DESIGN MANAGER — CITY ENGINEER

FILE: DRAWING: DATE:

ATLAS PAGE NO: 218, 219, 281, 282

SHEET 154 OF 165 SHEETS

DSNR: XXX PLOTTED BY: $USER# SCALE: $SCALE# $DATE# $TIME#
$FILE#

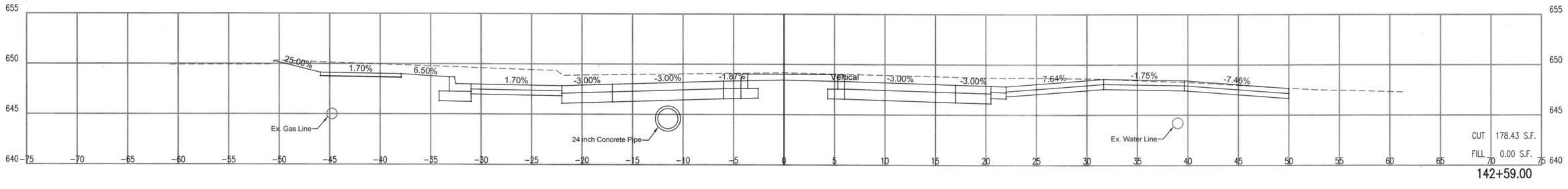

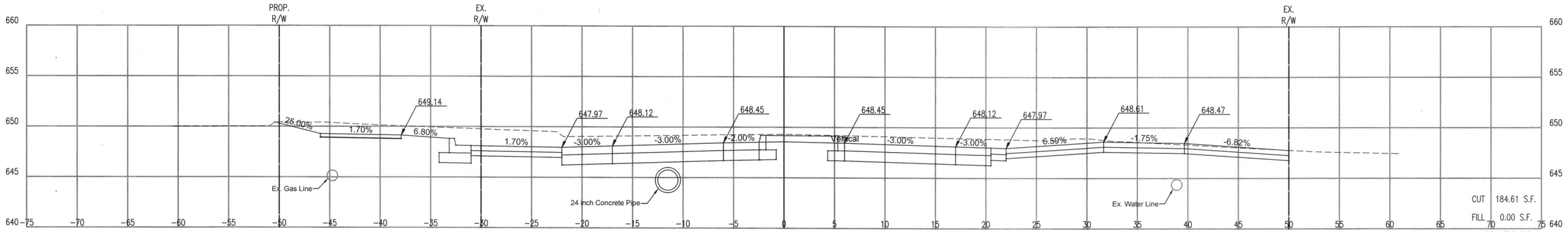

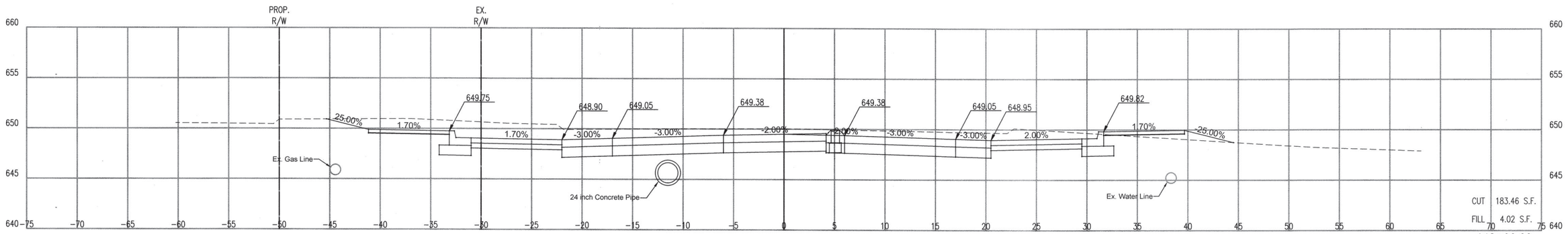

CROSS SECTIONS – 142+00.00 TO 142+59.00

PROJECT NO. 144200

ARTERIAL STREET REHABILITATION AND WATERLINE REPLACEMENT – 36TH ST. N. – MLK BLVD TO PEORIA AVE.

CITY OF TULSA, OKLAHOMA
ENGINEERING SERVICES DEPARTMENT

LICENSED PROFESSIONAL ENGINEER
JASON P. DICKMAN
27639
OKLAHOMA
07/19/2020

PLANS AND ESTIMATES PREPARED BY:
PEC PROFESSIONAL ENGINEERING CONSULTANTS, P.A.
1924 S. UTICA AVE., SUITE 1400
TULSA, OK 74104 918-664-5400 www.pec1.com

REVISION	BY	DATE

PLAN SCALE: 1" =
PROFILE SCALE:
HORIZONTAL: 1" = 5'
VERTICAL 1" = 5'

DRAWN	BFS	01/2020
DESIGNED	JPD	01/2020
SURVEY		
PROJ. MGR.		
LEAD ENGR.		
FIELD MGR.		

APPROVED:

RECOMMENDED:
DESIGN MANAGER
CITY ENGINEER

FILE: DRAWING: DATE:

ATLAS PAGE NO: 218, 219, 281, 282

SHEET 155 OF 165 SHEETS

DSNR: XXX PLOTTED BY: $USER$ SCALE: $SCALE$ $DATE$ $TIME$ $FILE$

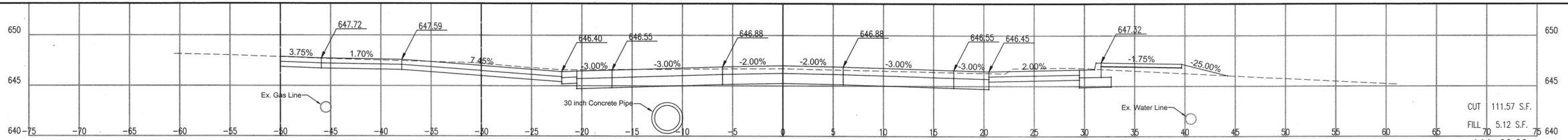

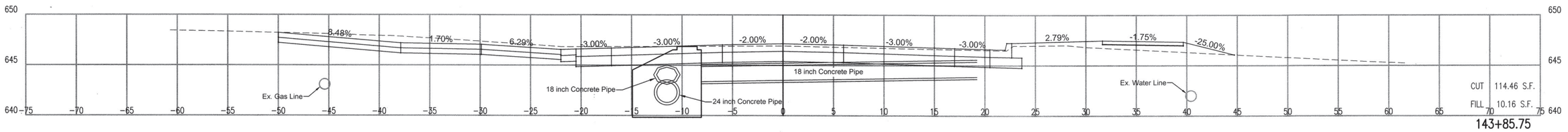

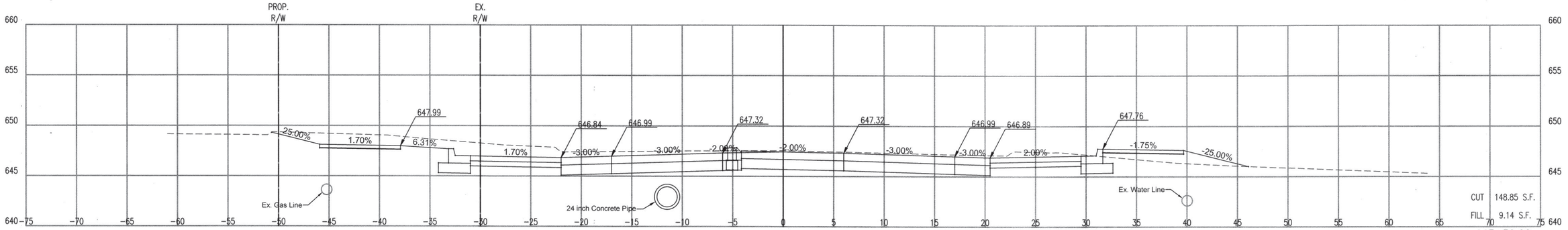

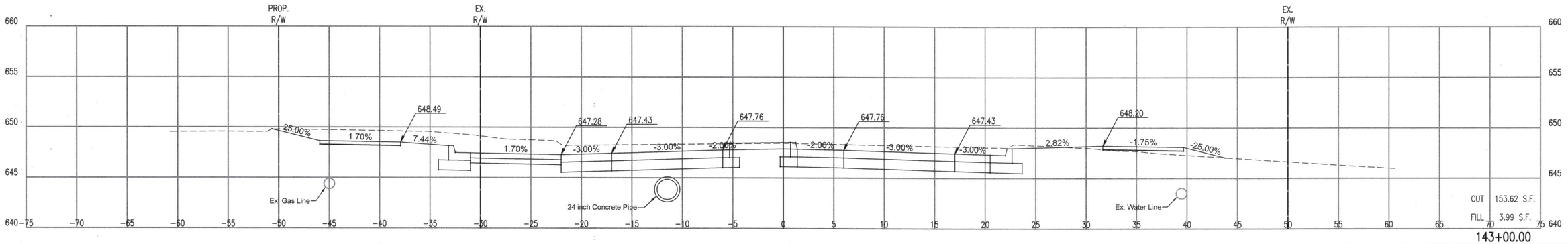

CROSS SECTIONS – 143+00.00 TO 144+00.00

PROJECT NO. 144200

ARTERIAL STREET REHABILITATION AND WATERLINE REPLACEMENT – 36TH ST. N. – MLK BLVD TO PEORIA AVE.

CITY OF TULSA, OKLAHOMA
ENGINEERING SERVICES DEPARTMENT

LICENSED PROFESSIONAL ENGINEER
JASON P. DICKMAN
27639
OKLAHOMA
07/19/2020

PLANS AND ESTIMATES PREPARED BY:

PEC
PROFESSIONAL ENGINEERING CONSULTANTS, P.A.
1924 S. UTICA AVE., SUITE 1400
TULSA, OK 74104 918-664-5400 www.pec1.com

REVISION	BY	DATE

PLAN SCALE: 1" =
PROFILE SCALE:
HORIZONTAL: 1" = 5'
VERTICAL 1" = 5'

DRAWN	BFS	01/2020	APPROVED:
DESIGNED	JPD	01/2020	
SURVEY			
PROJ. MGR.			
LEAD ENGR.			
FIELD MGR.			
RECOMMENDED:			
DESIGN MANAGER			CITY ENGINEER

FILE: DRAWING: DATE:

ATLAS PAGE NO: 218, 219, 281, 282 SHEET 156 OF 165 SHEETS

DSN#: XXX PLOTTED BY: $USER# SCALE: $SCALE# $DATE# $TIME#
$FILE#

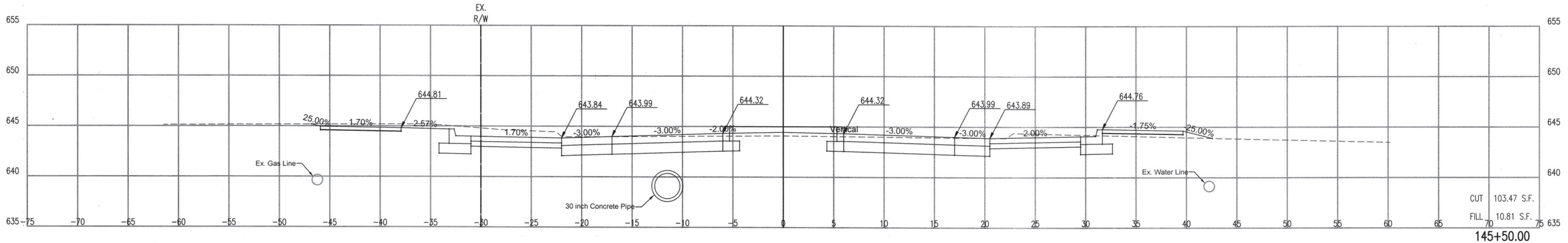

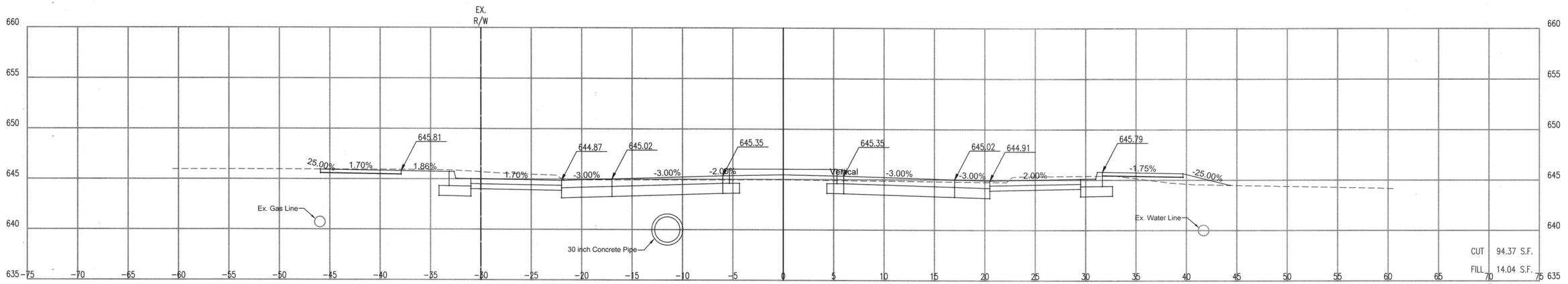

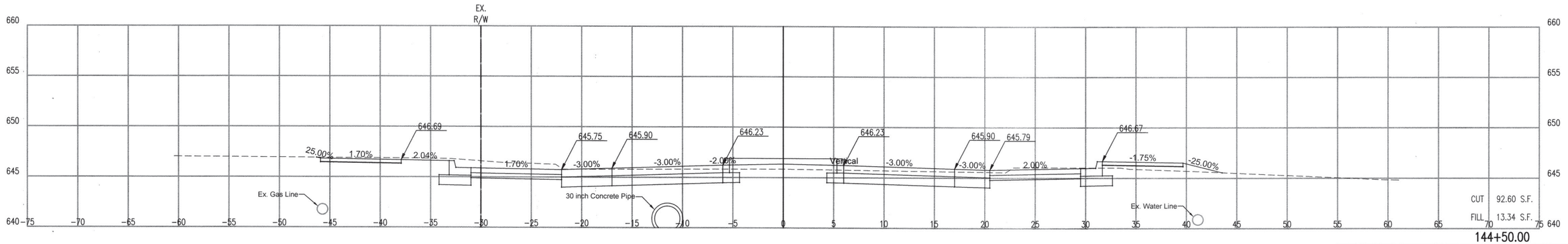

CROSS SECTIONS – 144+50.00 TO 145+50.00

PROJECT NO. 144200

ARTERIAL STREET REHABILITATION AND WATERLINE REPLACEMENT – 36TH ST. N. – MLK BLVD TO PEORIA AVE.

CITY OF TULSA, OKLAHOMA
ENGINEERING SERVICES DEPARTMENT

LICENSED PROFESSIONAL ENGINEER
JASON P. DICKMAN
27639
OKLAHOMA
07/19/2020

PLANS AND ESTIMATES PREPARED BY:

PEC PROFESSIONAL ENGINEERING CONSULTANTS, P.A.
1924 S. UTICA AVE., SUITE 1400
TULSA, OK 74104 918-664-5400 www.pec1.com

REVISION	BY	DATE

PLAN SCALE: 1" =	DRAWN	BFS	01/2020	APPROVED:
	DESIGNED	JPD	01/2020	
	SURVEY			
PROFILE SCALE:	PROJ. MGR.			
HORIZONTAL: 1" = 5'	LEAD ENGR.			
	FIELD MGR.			
VERTICAL 1" = 5'	RECOMMENDED:			
	DESIGN MANAGER			CITY ENGINEER
FILE:	DRAWING:			DATE:
ATLAS PAGE NO: 218, 219, 281, 282				SHEET 157 OF 165 SHEETS

DSNR: XXX PLOTTED BY: $USER# SCALE: $SCALE# $DATE# $TIME# $FILE#

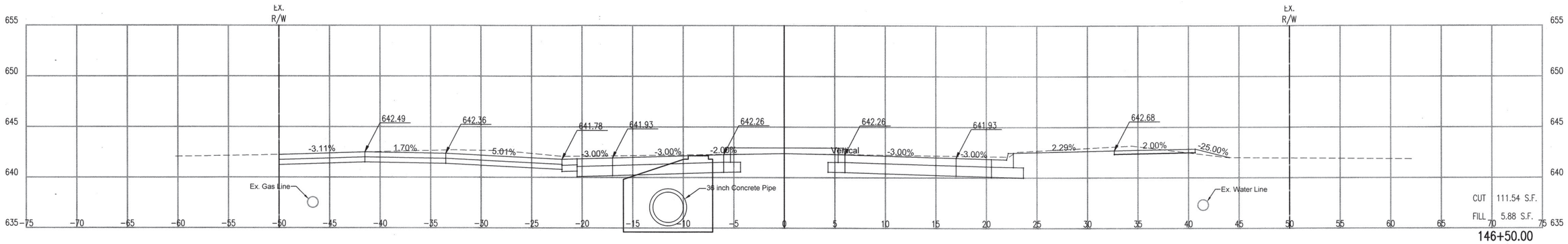

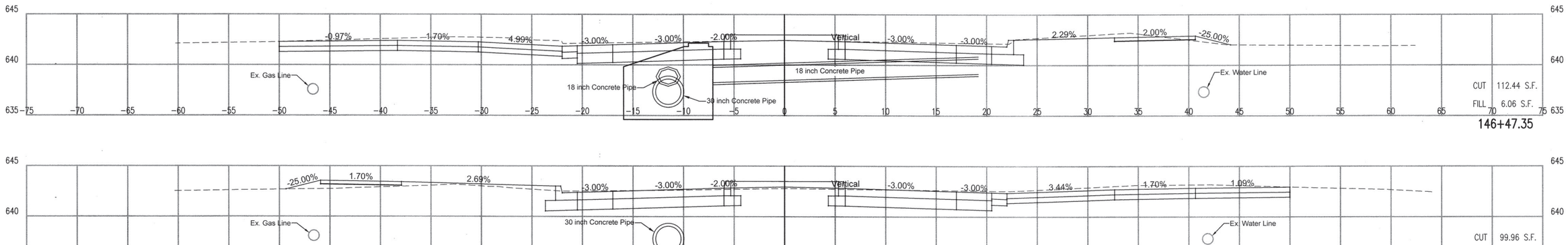

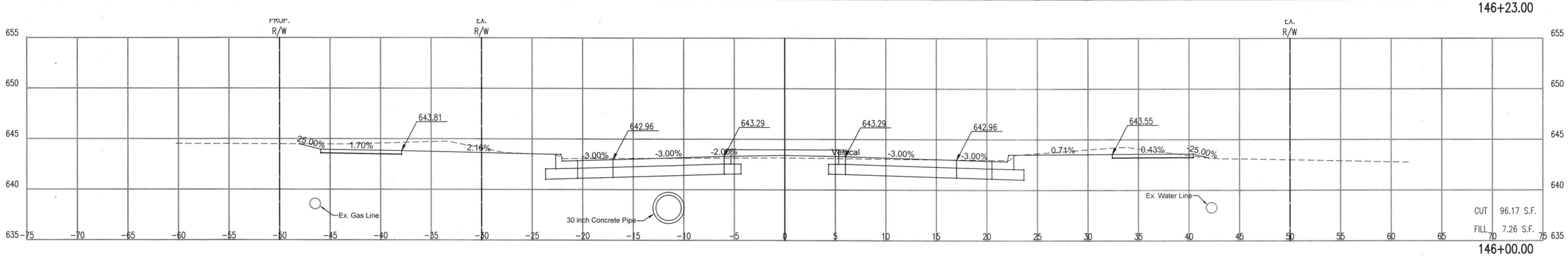

CROSS SECTIONS – 146+00.00 TO 146+50.00

PROJECT NO. 144200

ARTERIAL STREET REHABILITATION AND WATERLINE REPLACEMENT – 36TH ST. N. – MLK BLVD TO PEORIA AVE.

CITY OF TULSA, OKLAHOMA
ENGINEERING SERVICES DEPARTMENT

LICENSED PROFESSIONAL ENGINEER
JASON P. DICKMAN
27639
OKLAHOMA
07/19/2020

PLANS AND ESTIMATES PREPARED BY: PEC PROFESSIONAL ENGINEERING CONSULTANTS, P.A. 1924 S. UTICA AVE., SUITE 1400 TULSA, OK 74104 918-664-5400 www.pec1.com

REVISION	BY	DATE

PLAN SCALE: 1" =
PROFILE SCALE:
HORIZONTAL: 1" = 5'
VERTICAL 1" = 5'

DRAWN	BFS	01/2020	APPROVED:
DESIGNED	JPD	01/2020	
SURVEY			
PROJ. MGR.			
LEAD ENGR.			
FIELD MGR.			
RECOMMENDED:			
DESIGN MANAGER			CITY ENGINEER

FILE: DRAWING: DATE:

ATLAS PAGE NO: 218, 219, 281, 282

SHEET 158 OF 165 SHEETS

DSNR: XXX PLOTTED BY: $USER$ SCALE: $SCALE$ $DATE$ $TIME$ $FILE$

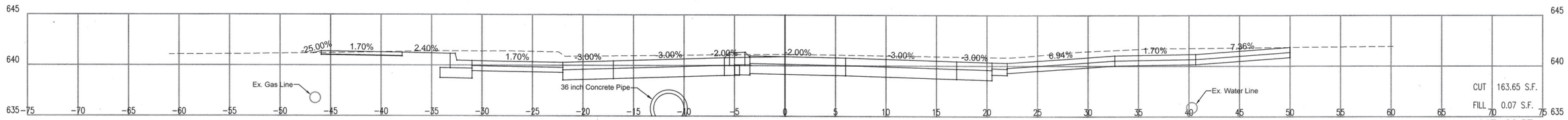

147+22.57

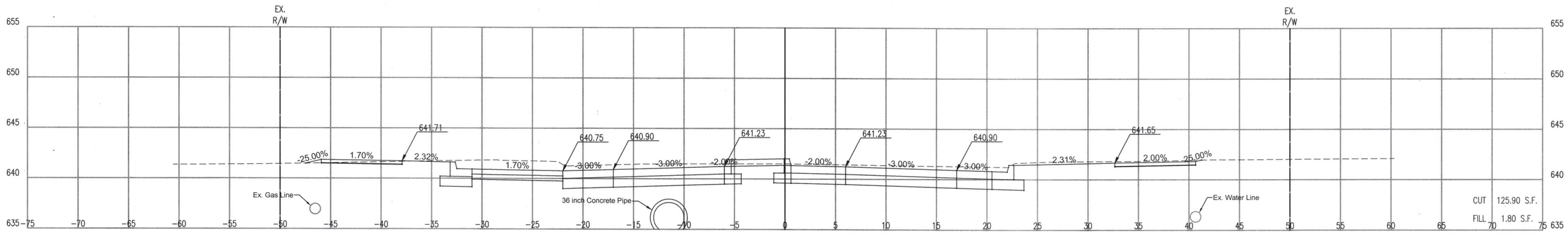

147+00.00

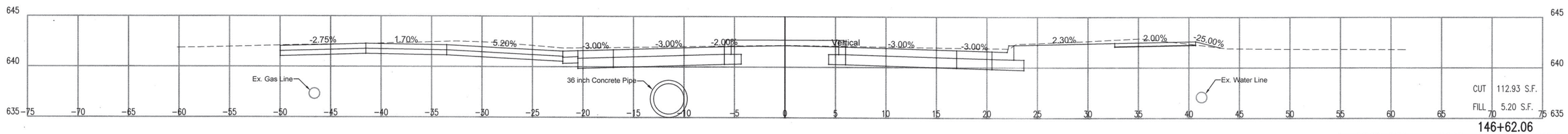

146+62.06

LICENSED PROFESSIONAL ENGINEER
JASON P. DICKMAN 27639
OKLAHOMA
07/19/2020

CROSS SECTIONS – 146+62.06 TO 147+22.57

PROJECT NO. 144200

ARTERIAL STREET REHABILITATION AND WATERLINE REPLACEMENT – 36TH ST. N. – MLK BLVD TO PEORIA AVE.

CITY OF TULSA, OKLAHOMA
ENGINEERING SERVICES DEPARTMENT

PLANS AND ESTIMATES PREPARED BY: PEC PROFESSIONAL ENGINEERING CONSULTANTS, P.A. 1924 S. UTICA AVE., SUITE 1400 TULSA, OK 74104 918-664-5400 www.pec1.com

REVISION	BY	DATE

PLAN SCALE: 1" =
PROFILE SCALE:
HORIZONTAL: 1" = 5'
VERTICAL 1" = 5'

DRAWN	BFS	01/2020	APPROVED:
DESIGNED	JPD	01/2020	
SURVEY			
PROJ. MGR.			
LEAD ENGR.			
FIELD MGR.			

RECOMMENDED:
DESIGN MANAGER — CITY ENGINEER

FILE: DRAWING: DATE:

ATLAS PAGE NO: 218, 219, 281, 282 — SHEET 159 OF 165 SHEETS

DSNR: XXX PLOTTED BY: $USER$ SCALE: $SCALE$ $DATE$ $TIME$ $FILE$

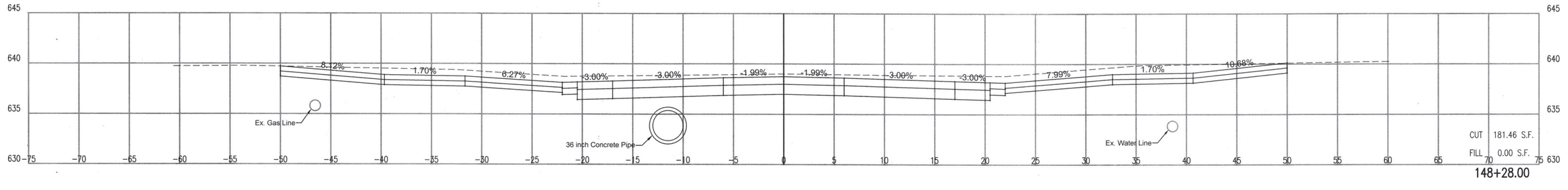

148+28.00

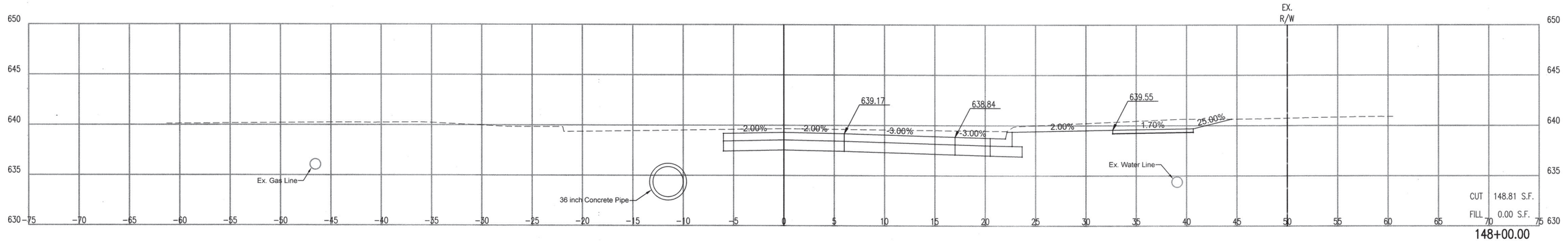

148+00.00

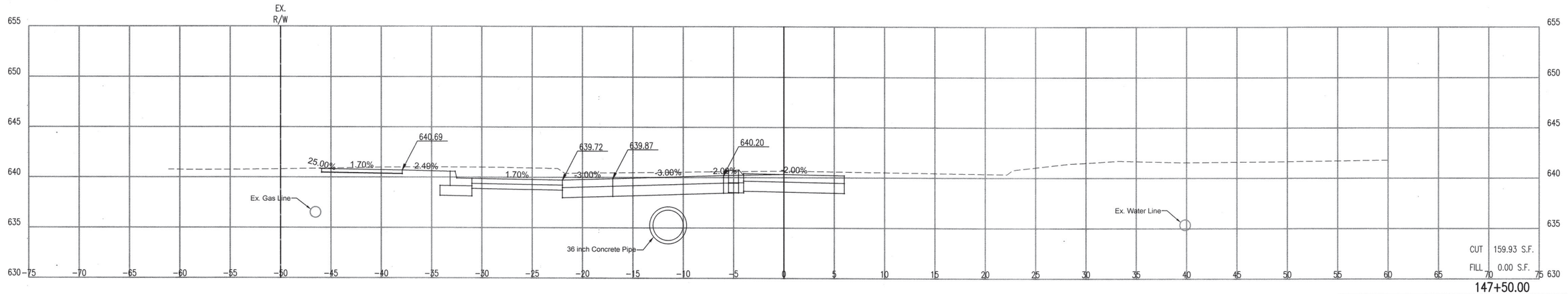

147+50.00

CROSS SECTIONS – 147+50.00 TO 148+28.00

PROJECT NO. 144200

ARTERIAL STREET REHABILITATION AND WATERLINE REPLACEMENT – 36TH ST. N. – MLK BLVD TO PEORIA AVE.

CITY OF TULSA, OKLAHOMA
ENGINEERING SERVICES DEPARTMENT

LICENSED PROFESSIONAL ENGINEER
JASON P. DICKMAN
27639
OKLAHOMA
07/19/2020

PLANS AND ESTIMATES PREPARED BY:

PEC PROFESSIONAL ENGINEERING CONSULTANTS, P.A.
1924 S. UTICA AVE., SUITE 1400
TULSA, OK 74104 918-664-5400 www.pec1.com

REVISION	BY	DATE

PLAN SCALE: 1" =	DRAWN	BFS	01/2020	APPROVED:
	DESIGNED	JPD	01/2020	
	SURVEY			
PROFILE SCALE:	PROJ. MGR.			
HORIZONTAL: 1" = 5'	LEAD ENGR.			
	FIELD MGR.			
VERTICAL 1" = 5'	RECOMMENDED: DESIGN MANAGER			CITY ENGINEER
FILE:	DRAWING:			DATE:
ATLAS PAGE NO: 218, 219, 281, 282				SHEET 160 OF 165 SHEETS

DSNR: XXX PLOTTED BY: $USER$ SCALE: $SCALE$ $DATE$ $TIME$ $FILE$

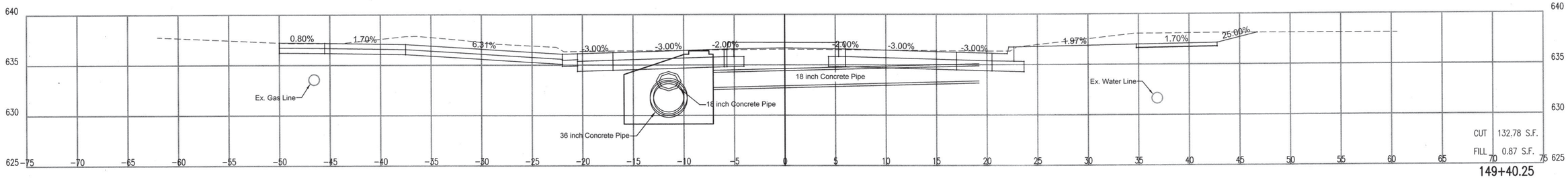

149+40.25

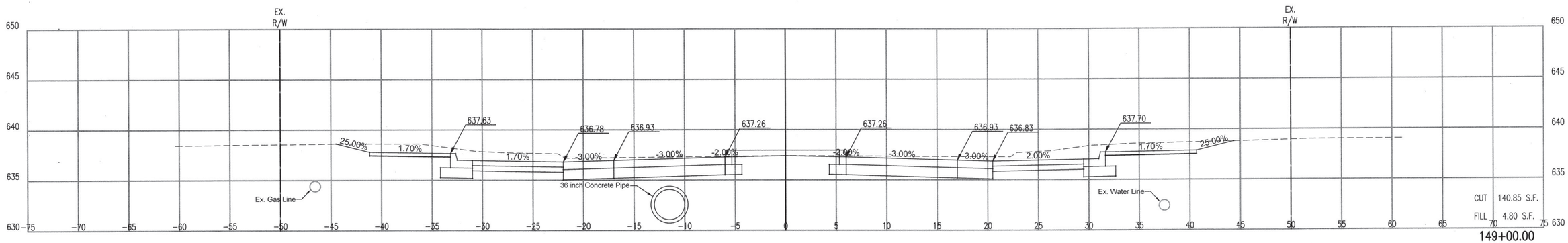

149+00.00

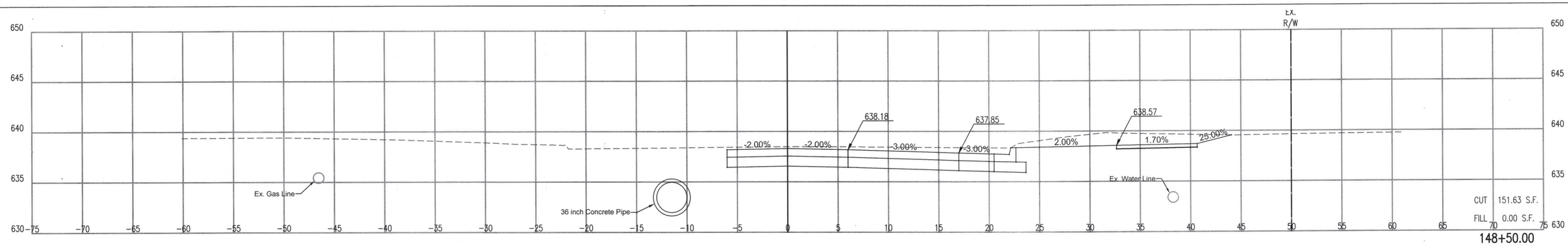

148+50.00

CROSS SECTIONS – 148+50.00 TO 149+40.25

PROJECT NO. 144200

ARTERIAL STREET REHABILITATION AND WATERLINE REPLACEMENT – 36TH ST. N. – MLK BLVD TO PEORIA AVE.

CITY OF TULSA, OKLAHOMA
ENGINEERING SERVICES DEPARTMENT

LICENSED PROFESSIONAL ENGINEER
JASON P. DICKMAN
27639
OKLAHOMA
07/19/2020

PLANS AND ESTIMATES PREPARED BY:

PEC PROFESSIONAL ENGINEERING CONSULTANTS, P.A.
1924 S. UTICA AVE., SUITE 1400
TULSA, OK 74104 918-664-5400 www.pec1.com

REVISION	BY	DATE

PLAN SCALE: 1" =	DRAWN	BFS	01/2020	APPROVED:
	DESIGNED	JPD	01/2020	
	SURVEY			
PROFILE SCALE:	PROJ. MGR.			
HORIZONTAL: 1" = 5'	LEAD ENGR.			
	FIELD MGR.			
VERTICAL 1" = 5'	RECOMMENDED: DESIGN MANAGER			CITY ENGINEER
FILE:	DRAWING:			DATE:
ATLAS PAGE NO: 218, 219, 281, 282				SHEET 161 OF 165 SHEETS

DSNR: XXX PLOTTED BY: $FILE$ $USER$ SCALE: $SCALE$ $DATE$ $TIME$

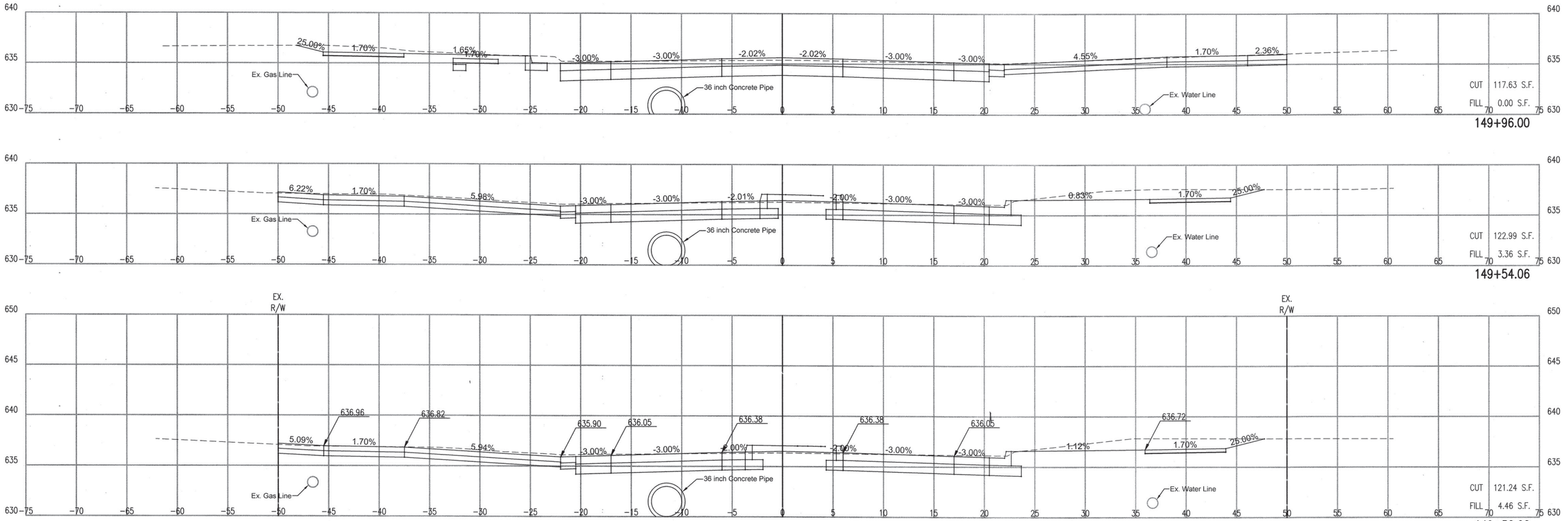

DSWG. XXX PLOTTED BY: $USER$ SCALE: $SCALE$ $DATE$ $TIME$

LICENSED PROFESSIONAL ENGINEER
JASON P. DICKMAN 27639
OKLAHOMA
07/19/2020

CROSS SECTIONS – 149+50.00 TO 149+96.00

PROJECT NO. 144200

ARTERIAL STREET REHABILITATION AND WATERLINE REPLACEMENT – 36TH ST. N. – MLK BLVD TO PEORIA AVE.

CITY OF TULSA, OKLAHOMA
ENGINEERING SERVICES DEPARTMENT

PLANS AND ESTIMATES PREPARED BY: PEC PROFESSIONAL ENGINEERING CONSULTANTS, P.A. 1924 S. UTICA AVE., SUITE 1400 TULSA, OK 74104 918-664-5400 www.pec1.com

REVISION	BY	DATE

PLAN SCALE: 1" =
PROFILE SCALE:
HORIZONTAL: 1" = 5'
VERTICAL 1" = 5'

DRAWN	BFS	01/2020	APPROVED:
DESIGNED	JPD	01/2020	
SURVEY			
PROJ. MGR.			
LEAD ENGR.			
FIELD MGR.			

RECOMMENDED:
DESIGN MANAGER
CITY ENGINEER

FILE: DRAWING: DATE:

ATLAS PAGE NO: 218, 219, 281, 282

SHEET 162 OF 165 SHEETS

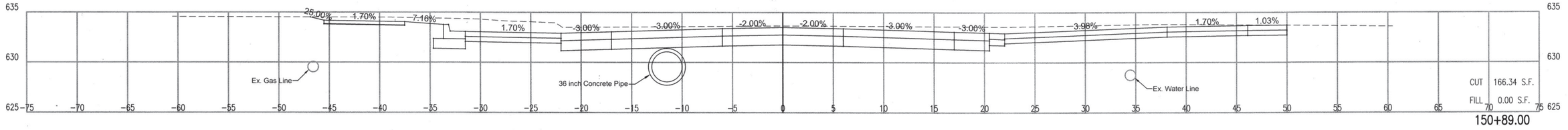

150+89.00

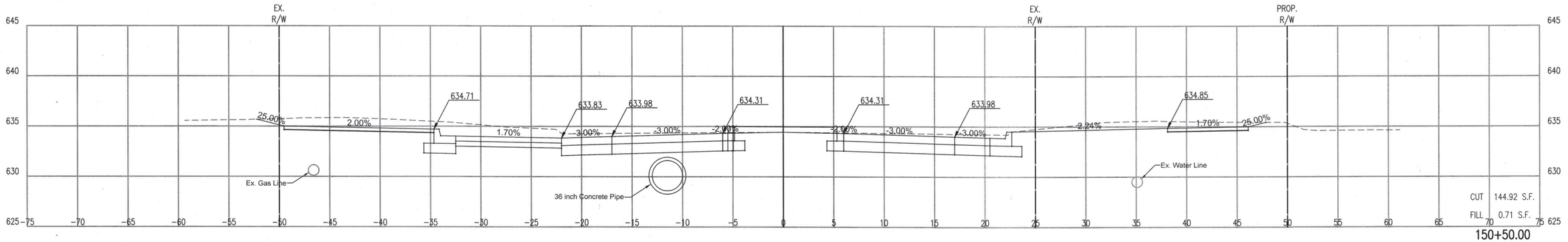

150+50.00

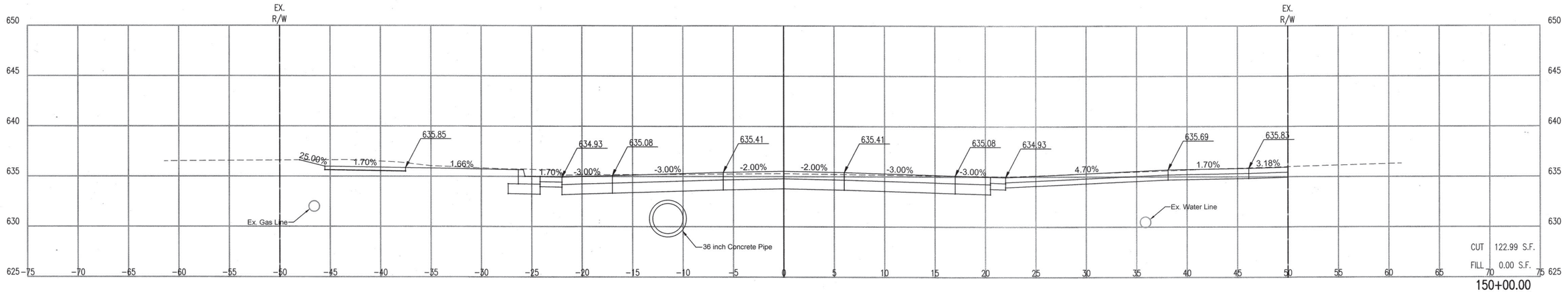

150+00.00

CROSS SECTIONS – 150+00.00 TO 150+89.00

PROJECT NO. 144200

ARTERIAL STREET REHABILITATION AND WATERLINE REPLACEMENT – 36TH ST. N. – MLK BLVD TO PEORIA AVE.

CITY OF TULSA, OKLAHOMA
ENGINEERING SERVICES DEPARTMENT

LICENSED PROFESSIONAL ENGINEER
JASON P. DICKMAN
27639
OKLAHOMA
07/19/2020

PLANS AND ESTIMATES PREPARED BY:
PEC PROFESSIONAL ENGINEERING CONSULTANTS, P.A.
1924 S. UTICA AVE., SUITE 1400
TULSA, OK 74104 918-664-5400 www.pec1.com

REVISION	BY	DATE

PLAN SCALE: 1" =
PROFILE SCALE:
HORIZONTAL: 1" = 5'
VERTICAL 1" = 5'

DRAWN	BFS	01/2020	APPROVED:
DESIGNED	JPD	01/2020	
SURVEY			
PROJ. MGR.			
LEAD ENGR.			
FIELD MGR.			
RECOMMENDED:			
DESIGN MANAGER			CITY ENGINEER

FILE: DRAWING: DATE:

ATLAS PAGE NO: 218, 219, 281, 282 SHEET 163 OF 165 SHEETS

$TIME$ $DATE$ $SCALE$ SCALE: $USER$ PLOTTED BY: XXX DGN: $FILE$

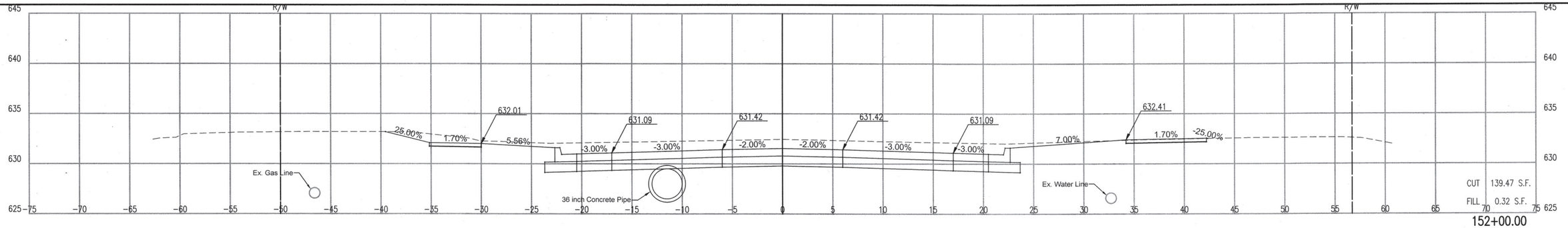

152+00.00

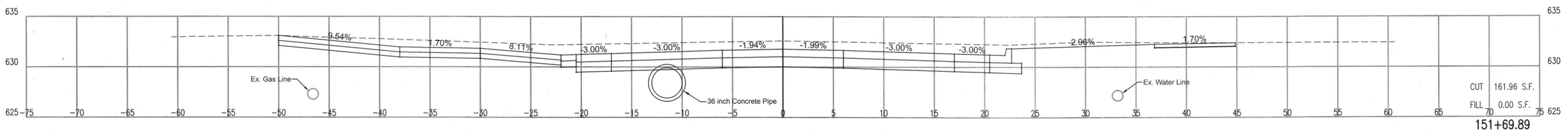

151+69.89

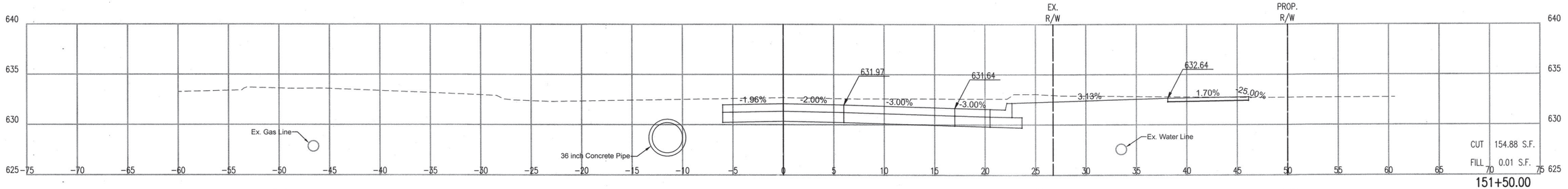

151+50.00

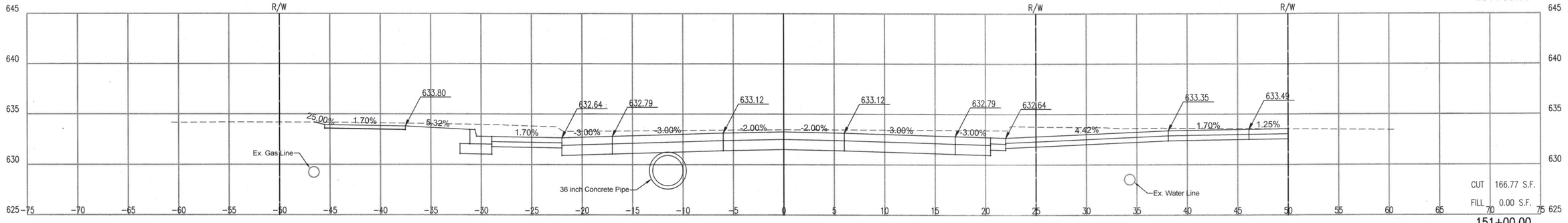

151+00.00

CROSS SECTIONS – 151+00.00 TO 152+00.00

PROJECT NO. 144200

ARTERIAL STREET REHABILITATION AND WATERLINE REPLACEMENT – 36TH ST. N. – MLK BLVD TO PEORIA AVE.

CITY OF TULSA, OKLAHOMA
ENGINEERING SERVICES DEPARTMENT

LICENSED PROFESSIONAL ENGINEER
JASON P. DICKMAN
27639
OKLAHOMA
07/19/2020

PLANS AND ESTIMATES PREPARED BY:

PEC PROFESSIONAL ENGINEERING CONSULTANTS, P.A.
1924 S. UTICA AVE., SUITE 1400
TULSA, OK 74104 918-664-5400 www.pec1.com

REVISION	BY	DATE

PLAN SCALE: 1" =	DRAWN	BFS	01/2020	APPROVED:
	DESIGNED	JPD	01/2020	
	SURVEY			
PROFILE SCALE:	PROJ. MGR.			
HORIZONTAL: 1" = 5'	LEAD ENGR.			
	FIELD MGR.			
VERTICAL 1" = 5'	RECOMMENDED: DESIGN MANAGER			CITY ENGINEER
FILE:	DRAWING:			DATE:
ATLAS PAGE NO: 218, 219, 281, 282				SHEET 164 OF 165 SHEETS

DGN: XXX PLOTTED BY: $USER$ SCALE: $SCALE$ $DATE$ $TIME$ $FILE$

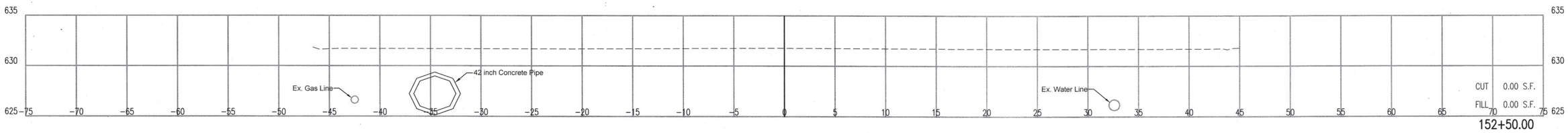

152+50.00

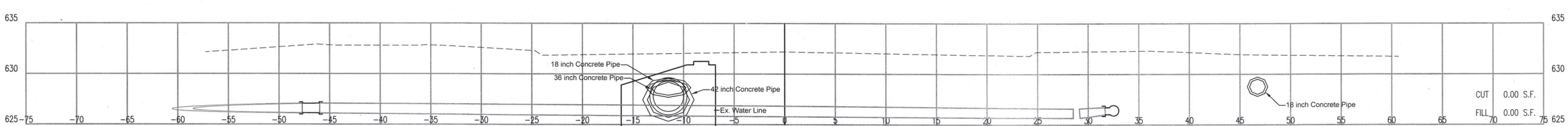

152+14.44

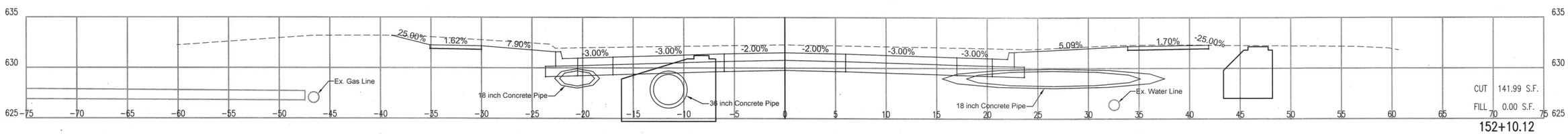

152+10.12

LICENSED PROFESSIONAL ENGINEER
JASON P. DICKMAN
27639
OKLAHOMA

07/19/2020

REVISION	BY	DATE

CROSS SECTIONS – 152+10.12 TO 152+50.00

PROJECT NO. 144200

ARTERIAL STREET REHABILITATION AND WATERLINE REPLACEMENT – 36TH ST. N. – MLK BLVD TO PEORIA AVE.

CITY OF TULSA, OKLAHOMA
ENGINEERING SERVICES DEPARTMENT

PLANS AND ESTIMATES PREPARED BY:

PEC PROFESSIONAL ENGINEERING CONSULTANTS, P.A.
1924 S. UTICA AVE., SUITE 1400
TULSA, OK 74104 918-684-5400 www.pec1.com

PLAN SCALE: 1" =	DRAWN	BFS	01/2020	APPROVED:
	DESIGNED	JPD	01/2020	
	SURVEY			
PROFILE SCALE:	PROJ. MGR.			
HORIZONTAL: 1" = 5'	LEAD ENGR.			
	FIELD MGR.			
VERTICAL 1" = 5'	RECOMMENDED: DESIGN MANAGER			CITY ENGINEER
FILE:	DRAWING:			DATE:
ATLAS PAGE NO: 218, 219, 281, 282				SHEET 165 OF 165 SHEETS

DSN#: XXX PLOTTED BY: $USER# SCALE: $SCALE# $DATE# $TIME#