CONSTRUCTION PLANS FOR
MAINTENANCE ZONE 6028–W
TUPELO CREEK DRAINAGE
CONSTRUCTION PACKAGE 1
PROJECT NO. 144628–W, TMUA–W 18–16
SW 2018–03, ES 2019–08
ACCOUNT NO. 144628.STREETS.5453104.6331–42733122–541106
CITY OF TULSA, OKLAHOMA
ENGINEERING SERVICES DEPARTMENT

SYMBOL LEGEND

- CONTROL POINT
- SURVEYED BENCHMARK
- AIR RELEASE VALVE
- ELECTRIC CONTROL BOX
- MONITORING WELL
- ELECTRIC METER
- FIRE HYDRANT
- FLAG POLE
- GATE POST
- GUARD RAIL POST
- GUY ANCHOR
- GUY POLE
- LIGHT POLE
- MAIL BOX
- POWER POLE/TELEPHONE POLE
- MANHOLE SANITARY, STORM
- SIGN
- SPIGOT
- SANITARY SEWER CLEAN OUT
- SANITARY SEWER LAMPHOLE
- WATER VALVE
- WATER METER
- TELEPHONE BOX
- TELEPHONE RISER
- GAS METER
- GAS VALVE
- BUSH/HEDGE
- SMALL CONIFEROUS TREE
- LARGE CONIFEROUS TREE
- SMALL DECIDUOUS TREE
- LARGE DECIDUOUS TREE
- Fence Line (All Types)
- Overhead Electric
- Underground Electric
- Overhead Telephone
- Underground Telephone
- Underground Cable Television
- Natural Gas Line
- Fiber Optic Cable
- Water Line
- Existing Storm Sewer
- Sanitary Sewer Line
- Proposed C.R.L.
- Floodplain Boundary

DRAWING REFERENCE LEGEND

- REFERS TO A PROFILE OR ELEVATION
- PROFILE NUMBER / SHEET NUMBER ON WHICH IT IS LOCATED
- DETAIL DESCRIPTION — SCALE: 1"=XX'

NOTE:

ALL CONSTRUCTION TO BE IN STRICT ACCORDANCE WITH CURRENT CITY OF TULSA ENGINEERING SERVICES DEPARTMENT, STANDARDS AND SPECIFICATIONS.

THIS PROJECT COMPLIES WITH ALL OKLAHOMA DEPARTMENT OF ENVIRONMENTAL QUALITY (ODEQ) REQUIREMENTS.

2009 OKLAHOMA DEPARTMENT OF TRANSPORTATION STANDARD SPECIFICATIONS FOR HIGHWAY CONSTRUCTION SHALL GOVERN. CITY OF TULSA ENGINEERING SERVICES DEPARTMENT CURRENT STANDARDS WILL BE USED AS APPLICABLE.

ENTIRE PROJECT IS WITHIN CORPORATE LIMITS OF CITY OF TULSA (COT)

OKIE 811 — Know what's below. Call before you dig.

DATUM INFORMATION

HORIZONTAL DATUM
NAD '83

VERTICAL DATUM
NAVD '88

ADS TD01 – 2" ALUM. CAP SET
N=419709.839
E=2609721.761
ELEV.=717.90

ADS #6 – 5/8" REBAR 1–1/2" ALUM. CAP
N=425120.182
E=2613605.145
ELEV.=744.423

UTILITY COORDINATION BOX

	NUMBER	NOTIFIED
WATER DESIGN	918–596–9580	
WASTEWATER DESIGN	918–596–9564	
TRANSPORTATION DESIGN	918–596–9636	
UTILITY COORDINATION – CHRIS KOVAC	918–596–9649	
STORMWATER DESIGN	918–596–9498	
PSO – ADAM FIELDS	918–250–6257	
ONG – JONATHON MEADOWS	918–831–8215	
AT&T – AL NICHOLS	918–596–4237	
COX COMMUNICATION – BRANDON WADE	918–286–4716	
MTTA – ERIC SMITH	918–830–0024	



DRAWING INDEX

1	–	COVER SHEET
2 – 8	–	PAY ITEMS AND CONSTRUCTION NOTES
9 – 14	–	WATERLINE PAY ITEMS AND NOTES
15 – 16	–	SANITARY SEWER PAY ITEMS AND NOTES
17 – 34	–	TYPICAL SECTIONS AND DETAILS
35 – 38	–	SUMMARY SCHEDULES
39 – 41	–	RIGHT OF WAY
42	–	SURVEY DATA
43	–	DRAINAGE AREA MAP
44 – 46	–	STORM SEWER STRUCTURE SUMMARY
47	–	STORM WATER MANAGEMENT PLAN
48 – 54	–	EROSION CONTROL
55 – 62	–	DEMOLITION PLAN
63 – 67	–	GEOMETRIC DATA
68	–	ROADWAY KEY PLAN
69 – 78	–	ROADWAY PLAN AND PROFILES
79	–	STORM SEWER ALIGNMENT DATA AND STORM SEWER KEY PLAN
80 – 89	–	STORM SEWER PLAN AND PROFILES
90	–	WATERLINE KEY PLAN
91 – 102	–	WATERLINE PLAN AND PROFILES
103	–	FIRE HYDRANT SPACING MAP
104	–	SANITARY SEWER KEY PLAN
105 – 114	–	SANITARY SEWER PLAN AND PROFILES
115	–	JOINT LAYOUT
116 – 118	–	INTERSECTION DETAILS
119	–	SEQUENCE OF CONSTRUCTION
120 – 161	–	CROSS SECTIONS

APPLICABLE STANDARDS:

CITY OF TULSA:
SEE SHEET 8

ODOT:
SEE SHEET 8

Approved:
CITY OF TULSA

CITY ENGINEER — DATE

ADVERTISEMENT DATE

Prepared By:
MESHEK & ASSOCIATES, L.L.C.

LICENSED PROFESSIONAL ENGINEER — BENJAMIN W. FLETCHER — 24021 — OKLAHOMA

8/7/2020
DATE

BENJAMIN W. FLETCHER, P.E., L.S.I
MESHEK & ASSOCIATES, L.L.C.

MESHEK & ASSOCIATES, LLC
1437 S Boulder Ave Ste 1550 | Tulsa, OK 74119 | 918-392-5620

MESHEK & ASSOCIATES, L.L.C.
C.A. 1487 EXPIRES 6/30/21
1437 S. BOULDER AVE, STE. 1550
TULSA, OK 74119
(PH) 918–392–5620
(FAX) 918–392–5621

2020 CITY OF TULSA, TULSA COUNTY, OKLAHOMA PROJECT NO. 144628–W, TMUA–W 18–16, SW 2018–03, ES 2019–08, MAINTENANCE ZONE 6028–W TUPELO CREEK DRAINAGE

PRINT DATE: 08/07/2020 M:\City_of_Tulsa\18TUL02_MZ6028_Tupelo_Creek_Drainage\Design\Drawings\18TUL02_COVER.dwg

PROJECT NO. 144628-W

MAINTENANCE ZONE 6028-W

FEMA - PARTICIPATING ROADWAY & DRAINAGE PAY ITEMS

ITEM NO.	SPEC NO.	ITEM DESCRIPTION	NOTES	UNIT	QUANTITY	SHEET 55	SHEET 56	SHEET 57	SHEET 58	SHEET 59	SHEET 60	SHEET 61	SHEET 62	SHEET 69	SHEET 70	SHEET 71	SHEET 72	SHEET 73	SHEET 74	SHEET 75	SHEET 76	SHEET 77	SHEET 78	SHEET 80	SHEET 81	SHEET 82	SHEET 83	SHEET 84	SHEET 85
1	201(A)	CLEARING AND GRUBBING	E-1,2	ACRE	1	-	-	-	-	-	-	-	-	-	-	-	-	-	-	-	-	-	-	-	-	-	-	-	-
2	202(A)	UNCLASSIFIED EXCAVATION	E-3,4,5 R-1	CY	24530	-	-	-	-	-	-	-	-	775	0	25	0	0	543	326	0	207	0	3595	3458	5098	3701	3519	3284
3	205(A)	TYPE A-SALVAGED TOPSOIL		CY	1608	-	-	-	-	-	-	-	-	48	0	267	0	0	92	46	0	28	0	0	0	210	285	316	316
4	220	SWPPP DOCUMENTATION AND MANAGEMENT	E-6	LS	1	-	-	-	-	-	-	-	-	-	-	-	-	-	-	-	-	-	-	-	-	-	-	-	-
5	221(C)	TEMPORARY SILT FENCE	E-7,8	LF	259	-	-	-	-	-	-	-	-	0	0	258	0	0	0	0	0	0	0	0	0	0	0	0	0
6	221(F)	TEMPORARY SILT DIKE	E-7,8	LF	555	-	-	-	-	-	-	-	-	121	0	63	0	0	32	71	0	94	0	0	0	0	57	58	58
7	230(A)	SOLID SLAB SODDING (LIKE-KIND)	E-10,11	SY	11573	-	-	-	-	-	-	-	-	343	0	1925	0	0	659	331	0	200	0	0	0	1510	2050	2277	2277
8	240(A)	REMOVING TREES 6" TO 12" IN DIAMETER		EA	77	2	2	0	0	0	1	44	28	0	0	0	0	0	0	0	0	0	0	0	0	0	0	0	0
9	240(A)	REMOVING TREES 13" TO 18" IN DIAMETER		EA	17	0	0	0	0	0	2	9	6	0	0	0	0	0	0	0	0	0	0	0	0	0	0	0	0
10	240(A)	REMOVING TREES 19" TO 24" IN DIAMETER		EA	10	0	0	0	0	0	3	6	1	0	0	0	0	0	0	0	0	0	0	0	0	0	0	0	0
11	240(A)	REMOVING TREES 25" & MORE IN DIAMETER		EA	17	0	1	0	0	0	5	6	5	0	0	0	0	0	0	0	0	0	0	0	0	0	0	0	0
12	303(A)	AGGREGATE BASE TYPE A	E-5 S-1,2,19	CY	3435	-	-	-	-	-	-	-	-	353	0	128	0	0	389	213	0	102	0	362	607	159	267	476	378
13	310(B)	SUBGRADE, METHOD B	E-5	SY	6820	-	-	-	-	-	-	-	-	1123	0	371	0	0	1065	550	0	305	0	19	0	0	866	1304	1217
14	325	SEPARATOR FABRIC	E-5 S-3	SY	13278	-	-	-	-	-	-	-	-	1459	0	482	0	0	1384	715	0	397	0	0	0	0	2116	3768	2956
15	326(B)	GEOGRID REINFORCEMENT	S-23	SY	100	-	-	-	-	-	-	-	-	0	0	0	0	0	0	0	0	0	0	0	0	0	0	0	0
16	411(B)	SUPERPAVE, TYPE S3 (PG 64-22 OK)	S-5,6,7,8	TON	632	-	-	-	-	-	-	-	-	205	0	70	0	0	204	102	0	51	0	0	0	0	0	0	0
17	411(C)	SUPERPAVE, TYPE S4 (PG 64-22 OK)	S-5,6,7,8	TON	253	-	-	-	-	-	-	-	-	82	0	28	0	0	82	41	0	20	0	0	0	0	0	0	0
18	414(A)	(SP) P.C. CONCRETE FOR PAVEMENT (PLACEMENT)		SY	147	-	-	-	-	-	-	-	-	146	0	0	0	0	0	0	0	0	0	0	0	0	0	0	0
19	414(G)	P.C. CONCRETE FOR PAVEMENT	S-10,11,12,13	CY	25	-	-	-	-	-	-	-	-	24	0	0	0	0	0	0	0	0	0	0	0	0	0	0	0
20	501(A)	STRUCTURAL EXCAVATION UNCLASSIFIED	S-20	CY	794	-	-	-	-	-	-	-	-	0	0	0	0	0	0	0	0	0	0	126	305	281	82	0	0
21	509(A)	CLASS AA CONCRETE	S-12,13	CY	4387	-	-	-	-	-	-	-	-	1	0	0	0	0	0	0	0	0	0	926	896	927	587	532	517
22	509(B)	CLASS A CONCRETE	S-23	CY	100	-	-	-	-	-	-	-	-	0	0	0	0	0	0	0	0	0	0	0	0	0	0	0	0
23	511(A)	REINFORCING STEEL		LB	578711	-	-	-	-	-	-	-	-	267	0	0	0	0	0	0	0	0	0	133713	125320	130720	73148	58964	56579
24	514	SHEET PILING	S-24	SY	52	-	-	-	-	-	-	-	-	0	0	0	0	0	0	0	0	0	0	0	0	0	0	52	0
25	609(B)	COMBINED CURB AND GUTTER (6" - BARRIER)	S-12,13,15,16	LF	1243	-	-	-	-	-	-	-	-	302	0	149	0	0	411	230	0	151	0	0	0	0	0	0	0
26	610(A)	4" CONCRETE SIDEWALK	S-12,13,16,17	SY	146	-	-	-	-	-	-	-	-	140	0	0	0	0	5	0	0	0	0	0	0	0	0	0	0
27	610(B)	6" H.E.S. CONCRETE DRIVEWAY	S-12,13,16,17	SY	465	-	-	-	-	-	-	-	-	55	0	29	0	0	203	177	0	0	0	0	0	0	0	0	0
28	610(I)	(PL) TACTILE WARNING DEVICE-NEW		SF	20	-	-	-	-	-	-	-	-	20	0	0	0	0	0	0	0	0	0	0	0	0	0	0	0	0
29	611(A)	MANHOLE (4' DIA.), FRAME & LID FOR JUNCTION BOX		EA	1	-	-	-	-	-	-	-	-	0	0	0	0	0	0	0	0	0	0	0	1	0	0	0	0
30	611(A)	MANHOLE (5' DIA.), COMPLETE IN PLACE (STORM SEWER)	D-1,2,3,4,5	EA	1	-	-	-	-	-	-	-	-	0	0	0	0	0	0	0	0	0	0	0	0	1	0	0	0
31	611(B)	ADD'L DEPTH IN MANHOLE (5' DIA) (STORM SEWER)	D-4	VF	3	-	-	-	-	-	-	-	-	0	0	0	0	0	0	0	0	0	0	0	0	2	0	0	0
32	611(G)	INLET CI DES. 2, COMPLETE IN PLACE	D-2,3,7,8,9,10,11	EA	1	-	-	-	-	-	-	-	-	0	0	0	0	0	0	0	0	0	0	1	0	0	0	0	0
33	611(G)	INLET CI DES. 2(B) W/ACCESS MANHOLE, COMPLETE IN PLACE	D-2,3,7,8,9,10,11	EA	1	-	-	-	-	-	-	-	-	0	0	0	0	0	0	0	0	0	0	1	0	0	0	0	0
34	611(G)	INLET CI DES. 4, COMPLETE IN PLACE	D-2,3,7,8,9,10,11	EA	1	-	-	-	-	-	-	-	-	0	0	0	0	0	0	0	0	0	0	1	0	0	0	0	0
35	611(G)	INLET CI DES. 4(B), COMPLETE IN PLACE	D-2,3,7,8,9,10,11	EA	2	-	-	-	-	-	-	-	-	0	0	0	0	0	0	0	0	0	0	1	0	1	0	0	0
36	611(G)	INLET CI DES. 4(B) W/ACCESS MANHOLE, COMPLETE IN PLACE	D-2,3,7,8,9,10,11	EA	1	-	-	-	-	-	-	-	-	0	0	0	0	0	0	0	0	0	0	0	1	0	0	0	0
37	611(G)	INLET CI DES. 5, COMPLETE IN PLACE	D-2,3,7,8,9,10,11	EA	1	-	-	-	-	-	-	-	-	0	0	0	0	0	0	0	0	0	0	0	1	0	0	0	0
38	611(G)	INLET CI DES. 5(B), COMPLETE IN PLACE	D-2,3,7,8,9,10,11	EA	1	-	-	-	-	-	-	-	-	0	0	0	0	0	0	0	0	0	0	1	0	0	0	0	0
39	611(G)	INLET CI DES. 5(H), COMPLETE IN PLACE	D-2,3,7,8,9,10,11	EA	1	-	-	-	-	-	-	-	-	0	0	0	0	0	0	0	0	0	0	0	0	1	0	0	0
40	611(G)	INLET CI DES. 5(H) W/ ACCESS MANHOLE, COMPLETE IN PLACE	D-2,3,7,8,9,10,11	EA	1	-	-	-	-	-	-	-	-	0	0	0	0	0	0	0	0	0	0	1	0	0	0	0	0
41	611(H)	ADD'L DEPTH IN INLET CI DES. 2	D-10	VF	1	-	-	-	-	-	-	-	-	0	0	0	0	0	0	0	0	0	0	0	0	0	0	0	0
42	611(H)	ADD'L DEPTH IN INLET CI DES. 4	D-10	VF	4	-	-	-	-	-	-	-	-	0	0	0	0	0	0	0	0	0	0	1	0	3	0	0	0
43	611(H)	ADD'L DEPTH IN INLET CI DES. 5	D-10	VF	6	-	-	-	-	-	-	-	-	0	0	0	0	0	0	0	0	0	0	0	2	3	0	0	0
44	611(H)	ADD'L DEPTH IN INLET CI DES. 4 W/ACCESS MANHOLE	D-10	VF	2	-	-	-	-	-	-	-	-	0	0	0	0	0	0	0	0	0	0	0	2	0	0	0	0
45	611(H)	ADD'L DEPTH IN INLET CI DES. 5 W/ACCESS MANHOLE	D-10	VF	3	-	-	-	-	-	-	-	-	0	0	0	0	0	0	0	0	0	0	2	0	0	0	0	0
46	613(J)	EDGE DRAIN CONDUIT-PERFORATED	D-16	LF	1686	-	-	-	-	-	-	-	-	501	0	175	0	0	567	290	0	151	0	0	0	0	0	0	0
47	619(A)	REMOVAL OF STRUCTURES AND OBSTRUCTIONS	R-1,2,3,4,5	EA	1	-	-	-	-	-	-	-	-	-	-	-	-	-	-	-	-	-	-	-	-	-	-	-	-
48	619(B)	REMOVAL OF DRAINAGE INLETS	R-1,2,5,6	EA	9	3	0	4	2	0	0	0	0	0	0	0	0	0	0	0	0	0	0	0	0	0	0	0	0
49	619(B)	REMOVAL OF MANHOLES	R-1,2,5,6	EA	4	2	0	1	1	0	0	0	0	0	0	0	0	0	0	0	0	0	0	0	0	0	0	0	0
50	619(B)	REMOVAL OF EXISTING 66" RCP	R-1,2,5,6	LF	1080	0	0	0	0	0	1080	0	0	0	0	0	0	0	0	0	0	0	0	0	0	0	0	0	0
51	619(B)	REMOVAL OF EXISTING PIPE	R-1,2,5,6	LF	444	329	0	70	45	0	0	0	0	0	0	0	0	0	0	0	0	0	0	0	0	0	0	0	0

PRINT DATE: 08/07/2020 M:\City_of_Tulsa\18TUL02_WZ6028_Tupelo_Creek_Drainage\Design\Drawings\18TUL02_PAY_ITEMS_AND_NOTES.dwg

LICENSED PROFESSIONAL ENGINEER
BENJAMIN W. FLETCHER
OK 24921
OKLAHOMA

8/7/2020

PAY ITEMS – PARTICIPATING

PROJECT #144628-W, TMUA-W 18-16

MAINTENANCE ZONE 6028-W
TUPELO CREEK DRAINAGE

CITY OF TULSA, OKLAHOMA
ENGINEERING SERVICES DEPARTMENT

PLANS AND ESTIMATES PREPARED BY:
Meshek & Associates, L.L.C.
1437 S. Boulder Avenue, Suite 1550 Tulsa, OK 74119 (918)392-5620

REVISION	BY	DATE

PLAN SCALE: N/A
PROFILE SCALE: HORIZONTAL: N/A VERTICAL: N/A

DRAWN	SCB	08/20	APPROVED:
DESIGNED	BWF	08/20	
SURVEY	AB	08/18	
PROJ. MGR.			
LEAD ENGR.			
FIELD MGR.			
RECOMMENDED DESIGN MANAGER			CITY ENGINEER
FILE:	DRAWING:		DATE:
ATLAS PAGE NO. 235			SHEET 2 OF 161 SHEETS

PROJECT NO. 144628-W

MAINTENANCE ZONE 6028-W

FEMA - PARTICIPATING ROADWAY & DRAINAGE PAY ITEMS

ITEM NO.	SPEC NO.	ITEM DESCRIPTION	NOTES	UNIT	QUANTITY	SHEET 55	SHEET 56	SHEET 57	SHEET 58	SHEET 59	SHEET 60	SHEET 61	SHEET 62	SHEET 69	SHEET 70	SHEET 71	SHEET 72	SHEET 73	SHEET 74	SHEET 75	SHEET 76	SHEET 77	SHEET 78	SHEET 80	SHEET 81	SHEET 82	SHEET 83	SHEET 84	SHEET 85
52	619(B)	REMOVAL OF EXISTING CONCRETE CHANNEL	R-1,2,5,6	SY	1459	112	0	0	0	0	52	1295	0	0	0	0	0	0	0	0	0	0	0	0	0	0	0	0	0
53	619(B)	REMOVAL OF ASPHALT PAVEMENT	R-1,2,5,6	SY	2307	760	248	1107	192	0	0	0	0	0	0	0	0	0	0	0	0	0	0	0	0	0	0	0	0
54	619(B)	REMOVAL OF CONCRETE PAVEMENT	R-1,2,5,6	SY	146	145	0	0	0	0	0	0	0	0	0	0	0	0	0	0	0	0	0	0	0	0	0	0	0
55	619(B)	REMOVAL OF CURB AND GUTTER	R-1,2,5,6	LF	1280	300	173	655	151	0	0	0	0	0	0	0	0	0	0	0	0	0	0	0	0	0	0	0	0
56	619(B)	REMOVAL OF SIDEWALK	R-1,2,5,6	SY	97	77	0	5	15	0	0	0	0	0	0	0	0	0	0	0	0	0	0	0	0	0	0	0	0
57	619(B)	REMOVAL OF CONCRETE DRIVEWAY	R-1,2,5,6	SY	691	188	122	380	0	0	0	0	0	0	0	0	0	0	0	0	0	0	0	0	0	0	0	0	0
58	619(B)	REMOVAL OF FENCE	G-10 R-1,2,5,6	LF	3065	217	0	0	0	0	819	1679	349	0	0	0	0	0	0	0	0	0	0	0	0	0	0	0	0
59	624	(PL) WOOD PRIVACY FENCE		LF	1177	-	-	-	-	-	-	-	-	0	0	0	0	0	0	0	0	0	0	14	0	244	515	113	289
60	624(E)	FENCE-STYLE CLF (4' HIGH, CLASS A)		LF	2352	-	-	-	-	-	-	-	-	0	0	0	0	0	0	0	0	0	0	0	0	74	361	1015	901
61	624(E)	FENCE-STYLE CLF 6' HIGH, CLASS A)		LF	215	-	-	-	-	-	-	-	-	0	0	0	0	0	0	0	0	0	0	106	0	109	0	0	0
62	624(F)	GATE-STYLE CLF (4' HIGH X 4' LONG)		EA	1	-	-	-	-	-	-	-	-	0	0	0	0	0	0	0	0	0	0	0	0	1	0	0	0
63	624(F)	GATE-STYLE CLF (4' HIGH X 6' LONG)		EA	1	-	-	-	-	-	-	-	-	0	0	0	0	0	0	0	0	0	0	0	0	1	0	0	0
64	640(A)	FIELD OFFICE		EA	1	-	-	-	-	-	-	-	-	-	-	-	-	-	-	-	-	-	-	-	-	-	-	-	-
65	641	MOBILIZATION	G-2	EA	1	-	-	-	-	-	-	-	-	-	-	-	-	-	-	-	-	-	-	-	-	-	-	-	-
66	642(B)	CONSTRUCTION STAKING LEVEL II	G-3,4,24,25,27	EA	1	-	-	-	-	-	-	-	-	-	-	-	-	-	-	-	-	-	-	-	-	-	-	-	-
67	629(E)	REMOVE AND RESET MAILBOX (LIKE-KIND)		EA	9	-	-	-	-	-	-	-	-	2	0	0	0	0	5	2	0	0	0	0	0	0	0	0	0
68	850(A)	SHEET ALUMINUM SIGNS	T-2	SF	24	-	-	-	-	-	-	-	-	13	0	2	0	0	9	0	0	0	0	0	0	0	0	0	0
69	851(C)	1-1/2" SQUARE TUBE POST		LF	3	-	-	-	-	-	-	-	-	0	0	2	0	0	2	0	0	0	0	0	0	0	0	0	0
70	851(C)	1-3/4" SQUARE TUBE POST		LF	41	-	-	-	-	-	-	-	-	22	0	8	0	0	11	0	0	0	0	0	0	0	0	0	0
71	851(C)	2" SQUARE TUBE POST		LF	12	-	-	-	-	-	-	-	-	6	0	3	0	0	3	0	0	0	0	0	0	0	0	0	0
72	880(B)	CONSTRUCTION SIGNS 0 SF TO 6.25 SF	T-2,4,5	SD	9600	-	-	-	-	-	-	-	-	-	-	-	-	-	-	-	-	-	-	-	-	-	-	-	-
73	880(B)	CONSTRUCTION SIGNS 6.26 SF TO 15.99 SF	T-2,4,5	SD	4800	-	-	-	-	-	-	-	-	-	-	-	-	-	-	-	-	-	-	-	-	-	-	-	-
74	880(B)	CONSTRUCTION SIGNS 16.0 SF AND UP	T-2,4,5	SD	1200	-	-	-	-	-	-	-	-	-	-	-	-	-	-	-	-	-	-	-	-	-	-	-	-
75	880(C)	BARRICADES (TYPE II)	T-2,4,5	SD	9600	-	-	-	-	-	-	-	-	-	-	-	-	-	-	-	-	-	-	-	-	-	-	-	-
76	880(C)	BARRICADES (TYPE III)	T-2,4,5	SD	7200	-	-	-	-	-	-	-	-	-	-	-	-	-	-	-	-	-	-	-	-	-	-	-	-
77	880(E)	WARNING LIGHTS (TYPE A)	T-5	SD	39600	-	-	-	-	-	-	-	-	-	-	-	-	-	-	-	-	-	-	-	-	-	-	-	-
78	880(G)	TUBE CHANNELIZERS	T-2,4	SD	30000	-	-	-	-	-	-	-	-	-	-	-	-	-	-	-	-	-	-	-	-	-	-	-	-
79	880(I)	FLAGGER	T-6	FD	1200	-	-	-	-	-	-	-	-	-	-	-	-	-	-	-	-	-	-	-	-	-	-	-	-
80	COT 625	REMOVAL OF TRAFFIC SIGNS		EA	7	-	-	-	-	-	-	-	-	-	-	-	-	-	-	-	-	-	-	-	-	-	-	-	-
81	(SP) COT 643	CONTRACTOR'S QUALITY CONTROL		EA	1	-	-	-	-	-	-	-	-	-	-	-	-	-	-	-	-	-	-	-	-	-	-	-	-
82	SPECIAL	PROJECT SIGN (CITY OF TULSA) STD. 102	T-7	EA	1	-	-	-	-	-	-	-	-	-	-	-	-	-	-	-	-	-	-	-	-	-	-	-	-
83	SPECIAL	STANDARD SIDEWALK RAMP (TYPE A)		EA	1	-	-	-	-	-	-	-	-	2	0	0	0	0	0	0	0	0	0	0	0	0	0	0	0
84	SPECIAL	CELLFILL	D-8 G-1 S-26	CY	96	-	-	-	-	-	-	-	-	0	0	0	0	0	0	0	0	0	0	0	0	88	0	0	0
85	SPECIAL	22' ASPHALT SPEED HUMP W/ PAVEMENT MARKINGS (ASH-1-3)	S-25 T-3	LF	33	-	-	-	-	-	-	-	-	33	0	0	0	0	0	0	0	0	0	0	0	0	0	0	0
86	SPECIAL	URBAN RIGHT-OF-WAY RESTORATION	G-5,6,7,8,9,10	EA	1	-	-	-	-	-	-	-	-	-	-	-	-	-	-	-	-	-	-	-	-	-	-	-	-
87	SPECIAL	OWNER ALLOWANCE		ALLOW	1	-	-	-	-	-	-	-	-	-	-	-	-	-	-	-	-	-	-	-	-	-	-	-	-

FEMA - PARTICIPATING STORM SEWER PIPE MATERIAL OPTION 1 (RCP)

ITEM NO.	SPEC NO.	ITEM DESCRIPTION	NOTES	UNIT	QUANTITY	SHEET 55	SHEET 56	SHEET 57	SHEET 58	SHEET 59	SHEET 60	SHEET 61	SHEET 62	SHEET 69	SHEET 70	SHEET 71	SHEET 72	SHEET 73	SHEET 74	SHEET 75	SHEET 76	SHEET 77	SHEET 78	SHEET 80	SHEET 81	SHEET 82	SHEET 83	SHEET 84	SHEET 85
88	613(A)	18" R.C. PIPE CLASS III (RCP) W/ OMNIFLEX GASKETS, COMPLETE IN PLACE	D-8,12,13	LF	160	-	-	-	-	-	-	-	-	0	0	0	0	0	0	0	0	0	0	95	54	10	0	0	0
89	613(A)	24" R.C. PIPE CLASS III (RCP) W/ OMNIFLEX GASKETS, COMPLETE IN PLACE	D-8,12,13	LF	29	-	-	-	-	-	-	-	-	0	0	0	0	0	0	0	0	0	0	0	0	28	0	0	0
90	613(A)	30" R.C. PIPE CLASS III (RCP) W/ OMNIFLEX GASKETS, COMPLETE IN PLACE	D-8,12,13	LF	24	-	-	-	-	-	-	-	-	0	0	0	0	0	0	0	0	0	0	24	0	0	0	0	0
91	613(A)	36" R.C. PIPE CLASS III (RCP) W/ OMNIFLEX GASKETS, COMPLETE IN PLACE	D-8,12,13	LF	4	-	-	-	-	-	-	-	-	0	0	0	0	0	0	0	0	0	0	4	0	0	0	0	0

FEMA - PARTICIPATING STORM SEWER PIPE MATERIAL OPTION 2 (CPP)

ITEM NO.	SPEC NO.	ITEM DESCRIPTION	NOTES	UNIT	QUANTITY	SHEET 55	SHEET 56	SHEET 57	SHEET 58	SHEET 59	SHEET 60	SHEET 61	SHEET 62	SHEET 69	SHEET 70	SHEET 71	SHEET 72	SHEET 73	SHEET 74	SHEET 75	SHEET 76	SHEET 77	SHEET 78	SHEET 80	SHEET 81	SHEET 82	SHEET 83	SHEET 84	SHEET 85
92	COT 215	(SP) 18" CORRUGATED POLYPROPYLENE PIPE (CPP), COMPLETE IN PLACE	D-13,14,15	LF	160	-	-	-	-	-	-	-	-	0	0	0	0	0	0	0	0	0	0	95	54	10	0	0	0
93	COT 215	(SP) 24" CORRUGATED POLYPROPYLENE PIPE (CPP), COMPLETE IN PLACE	D-13,14,15	LF	29	-	-	-	-	-	-	-	-	0	0	0	0	0	0	0	0	0	0	0	0	28	0	0	0
94	COT 215	(SP) 30" CORRUGATED POLYPROPYLENE PIPE (CPP), COMPLETE IN PLACE	D-13,14,15	LF	24	-	-	-	-	-	-	-	-	0	0	0	0	0	0	0	0	0	0	24	0	0	0	0	0
95	COT 215	(SP) 36" CORRUGATED POLYPROPYLENE PIPE (CPP), COMPLETE IN PLACE	D-13,14,15	LF	4	-	-	-	-	-	-	-	-	0	0	0	0	0	0	0	0	0	0	4	0	0	0	0	0

FEMA - PARTICIPATING SANITARY SEWER PAY ITEMS

ITEM NO.	SPEC NO.	ITEM DESCRIPTION	NOTES	UNIT	QUANTITY
183	205(A)	TYPE A SALVAGED TOPSOIL		CY	64
184	221(C)	SILT FENCE		LF	240
185	230(A)	SOLID SLAB SODDING (LIKE-KIND)		SY	188
186	COT 302	UNCLASSIFIED EXCAVATION AND BACKFILL	13,14,15,20,34	CY	275
187	COT 313	8" PVC SEWER PIPE SDR-26 (TRENCH)	26,27,28,29,30,31,36	LF	412
188	COT 314	4' DIAMETER MANHOLE, COMPLETE IN PLACE (SANITARY SEWER)	21,22,23,24,25	EA	4
189	COT 315	SERVICE CONNECTION	18,19,20	EA	5
190	611(B)	ADDITIONAL DEPTH MANHOLE (4' ID)		VF	21
191	619(B)	REMOVAL OF MANHOLE	25	EA	5
192	619(B)	REMOVAL OF EXISTING PIPE	25,36	LF	411
193	619(B)	REMOVE AND REPLACE FENCE (LIKE-KIND)		LF	30
194	509(B)	CLASS A CONCRETE		CY	5
195	511(A)	REINFORCING STEEL		LB	685



PAY ITEMS – PARTICIPATING

PROJECT #144628-W, TMUA-W 18-16

MAINTENANCE ZONE 6028-W
TUPELO CREEK DRAINAGE

CITY OF TULSA, OKLAHOMA
ENGINEERING SERVICES DEPARTMENT

PLANS AND ESTIMATES PREPARED BY:
Meshek & Associates, L.L.C.
1437 S. Boulder Avenue, Suite 1550 Tulsa, OK 74119 (918)392-5620

REVISION	BY	DATE

PLAN SCALE: N/A
PROFILE SCALE:
HORIZONTAL: N/A
VERTICAL: N/A

DRAWN	SCB	08/20	APPROVED:
DESIGNED	BWF	08/20	
SURVEY	AB	08/18	
PROJ. MGR.			
LEAD ENGR.			
FIELD MGR.			
RECOMMENDED			
DESIGN MANAGER			CITY ENGINEER
FILE:	DRAWING:		DATE:
ATLAS PAGE NO. 235			SHEET 3 OF 161 SHEETS

PRINT DATE: 08/07/2020 M:\City_of_Tulsa\18TUL02_MZ6028_Tupelo_Creek_Drainage\Design\Drawings\18TUL02_PAY_ITEMS_AND_NOTES.dwg

PROJECT NO. 144628-W

MAINTENANCE ZONE 6028-W

NON-PARTICIPATING ROADWAY & DRAINAGE PAY ITEMS

ITEM NO.	SPEC NO.	ITEM DESCRIPTION	NOTES	UNIT	QUANTITY	SHEET 55	SHEET 56	SHEET 57	SHEET 58	SHEET 59	SHEET 60	SHEET 61	SHEET 62	SHEET 69	SHEET 70	SHEET 71	SHEET 72	SHEET 73	SHEET 74	SHEET 75	SHEET 76	SHEET 77	SHEET 78	SHEET 80	SHEET 81	SHEET 82	SHEET 83	SHEET 84	SHEET 85
196	201(A)	CLEARING AND GRUBBING	E-1,2	ACRE	0.5	-	-	-	-	-	-	-	-	-	-	-	-	-	-	-	-	-	-	-	-	-	-	-	-
197	202(A)	UNCLASSIFIED EXCAVATION	E-3,4,5 R-1	CY	3896	-	-	-	-	-	-	-	-	284	602	22	73	641	0	261	1579	421	12	0	0	0	0	0	0
198	205(A)	TYPE A-SALVAGED TOPSOIL		CY	693	-	-	-	-	-	-	-	-	45	45	75	75	80	0	122	122	25	102	0	0	0	0	0	0
199	220	SWPPP DOCUMENTATION AND MANAGEMENT	E-6	LS	1	-	-	-	-	-	-	-	-	-	-	-	-	-	-	-	-	-	-	-	-	-	-	-	-
200	221(F)	TEMPORARY SILT DIKE	E-7,8	LF	221	-	-	-	-	-	-	-	-	48	48	34	34	0	0	0	0	0	56	0	0	0	0	0	0
201	230(A)	SOLID SLAB SODDING (LIKE-KIND)	E-10,11	SY	4983	-	-	-	-	-	-	-	-	327	327	537	537	577	0	880	880	183	735	0	0	0	0	0	0
202	240(A)	REMOVING TREES 25" & MORE IN DIAMETER		EA	1	0	0	0	0	1	0	0	0	0	0	0	0	0	0	0	0	0	0	0	0	0	0	0	0
203	303(A)	AGGREGATE BASE TYPE A	E-5 S-1,2,19	CY	2983	-	-	-	-	-	-	-	-	173	380	104	276	402	0	178	956	319	195	0	0	0	0	0	0
204	310(B)	SUBGRADE, METHOD B	E-5	SY	8247	-	-	-	-	-	-	-	-	490	1061	289	724	1119	0	466	2706	864	529	0	0	0	0	0	0
205	325	SEPARATOR FABRIC	E-5 S-3	SY	10711	-	-	-	-	-	-	-	-	637	1379	375	941	1455	0	606	3518	1113	688	0	0	0	0	0	0
206	409(A)	FABRIC REINFORCEMENT	S-4	SY	2719	-	-	-	-	-	-	-	-	0	730	325	1160	0	0	0	0	43	461	0	0	0	0	0	0
207	411(B)	SUPERPAVE, TYPE S3 (PG 64-22 OK)	S-5,6,7,8	TON	1424	-	-	-	-	-	-	-	-	106	196	0	0	239	0	96	575	164	47	0	0	0	0	0	0
208	411(C)	SUPERPAVE, TYPE S4 (PG 64-22 OK)	S-5,6,7,8	TON	847	-	-	-	-	-	-	-	-	43	153	33	118	96	0	39	230	70	66	0	0	0	0	0	0
209	411(D)	SUPERPAVE, TYPE S5 (PG 64-22 OK)	S-5,6,7,8 G-1	TON	139	-	-	-	-	-	-	-	-	0	37	17	59	0	0	0	0	2	23	0	0	0	0	0	0
210	412	COLD MILLING PAVEMENT	S-9	SY	2472	-	-	-	-	-	-	-	-	0	664	295	1055	0	0	0	0	39	419	0	0	0	0	0	0
211	509(A)	CLASS AA CONCRETE	S-12,13	CY	2	-	-	-	-	-	-	-	-	0	0	0	0	0	0	0	1	0	0	0	0	0	0	0	0
212	511(A)	REINFORCING STEEL		LB	268	-	-	-	-	-	-	-	-	0	0	0	0	0	0	0	267	0	0	0	0	0	0	0	0
213	609(B)	COMBINED CURB AND GUTTER (6" - BARRIER)	S-12,13,15,16	LF	3316	-	-	-	-	-	-	-	-	135	444	189	591	325	0	150	801	328	353	0	0	0	0	0	0
214	610(A)	4" CONCRETE SIDEWALK	S-12,13,16,17	SY	209	-	-	-	-	-	-	-	-	61	135	0	0	4	0	0	4	0	5	0	0	0	0	0	0
215	610(B)	6" CONCRETE DRIVEWAY (H.E.S.)	S-12,13,16,17	SY	1392	-	-	-	-	-	-	-	-	56	161	46	208	175	0	137	312	186	111	0	0	0	0	0	0
216	610(I)	(PL) TACTILE WARNING DEVICE-NEW		SF	20	-	-	-	-	-	-	-	-	0	0	0	0	20	0	0	0	0	0	0	0	0	0	0	0
217	611(A)	MANHOLE (5' DIA.), COMPLETE IN PLACE	D-1,2,3,4,5	EA	2	-	-	-	-	-	-	-	-	0	2	0	0	0	0	0	0	0	0	0	0	0	0	0	0
218	611(A)	MANHOLE (6' DIA.), COMPLETE IN PLACE	D-1,2,3,4,5	EA	1	-	-	-	-	-	-	-	-	0	0	0	1	0	0	0	0	0	0	0	0	0	0	0	0
219	611(B)	ADD'L DEPTH IN MANHOLE (5' DIA) (STORM SEWER)	D-4	VF	1	-	-	-	-	-	-	-	-	0	0	0	0	0	0	0	0	0	0	0	0	0	0	0	0
220	611(G)	INLET CI DES. 2, COMPLETE IN PLACE	D-2,3,7,8,9,10,11	EA	1	-	-	-	-	-	-	-	-	0	0	0	1	0	0	0	0	0	0	0	0	0	0	0	0
221	611(G)	INLET CI DES. 5 (2B), COMPLETE IN PLACE	D-2,3,7,8,9,10,11	EA	1	-	-	-	-	-	-	-	-	0	0	0	1	0	0	0	0	0	0	0	0	0	0	0	0
222	611(G)	INLET CI DES. 5 (H), COMPLETE IN PLACE	D-2,3,7,8,9,10,11	EA	2	-	-	-	-	-	-	-	-	0	2	0	0	0	0	0	0	0	0	0	0	0	0	0	0
223	611(G)	INLET CI DES. 5 (H) W/ ACCESS MANHOLE, COMPLETE IN PLACE	D-2,3,7,8,9,10,11	EA	1	-	-	-	-	-	-	-	-	0	1	0	0	0	0	0	0	0	0	0	0	0	0	0	0
224	611(H)	ADD'L DEPTH IN INLET, CI DES. 5	D-10	VF	1	-	-	-	-	-	-	-	-	0	0	0	0	0	0	0	0	0	0	0	0	0	0	0	0
225	611(H)	ADD'L DEPTH IN INLET, CI DES. 5 W/ ACCESS MANHOLE	D-10	VF	1	-	-	-	-	-	-	-	-	0	1	0	0	0	0	0	0	0	0	0	0	0	0	0	0
226	613(J)	EDGE DRAIN CONDUIT-PERFORATED	D-16	LF	4475	-	-	-	-	-	-	-	-	208	751	231	781	426	0	270	880	489	439	0	0	0	0	0	0
227	619(A)	REMOVAL OF STRUCTURES AND OBSTRUCTIONS	R-1,2,3,4,5	EA	1	-	-	-	-	-	-	-	-	-	-	-	-	-	-	-	-	-	-	-	-	-	-	-	-
228	619(B)	REMOVAL OF DRAINAGE INLETS	R-1,2,5,6	EA	5	2	2	0	0	1	0	0	0	0	0	0	0	0	0	0	0	0	0	0	0	0	0	0	0
229	619(B)	REMOVAL OF EXISTING PIPE	R-1,2,5,6	LF	275	63	59	0	100	52	0	0	0	0	0	0	0	0	0	0	0	0	0	0	0	0	0	0	0
230	619(B)	REMOVAL OF ASPHALT PAVEMENT	R-1,2,5,6	SY	5075	1077	0	338	2653	1006	0	0	0	0	0	0	0	0	0	0	0	0	0	0	0	0	0	0	0
231	619(B)	REMOVAL OF CURB AND GUTTER	R-1,2,5,6	LF	3376	605	751	160	1182	678	0	0	0	0	0	0	0	0	0	0	0	0	0	0	0	0	0	0	0
232	619(B)	REMOVAL OF SIDEWALK	R-1,2,5,6	SY	218	175	9	0	24	9	0	0	0	0	0	0	0	0	0	0	0	0	0	0	0	0	0	0	0
233	619(B)	REMOVAL OF CONCRETE DRIVEWAY	R-1,2,5,6	SY	1367	209	244	135	486	292	0	0	0	0	0	0	0	0	0	0	0	0	0	0	0	0	0	0	0
234	619(B)	REMOVAL OF FENCE	R-1,2,5,6	LF	97	43	54	0	0	0	0	0	0	0	0	0	0	0	0	0	0	0	0	0	0	0	0	0	0
235	624	(PL) WOOD PRIVACY FENCE		LF	97	-	-	-	-	-	-	-	-	0	43	0	54	0	0	0	0	0	0	0	0	0	0	0	0	0
236	629(E)	REMOVE AND RESET MAILBOX (LIKE-KIND)		EA	48	-	-	-	-	-	-	-	-	1	4	3	7	6	0	4	12	8	3	0	0	0	0	0	0
237	641	MOBILIZATION	G-2	EA	1	-	-	-	-	-	-	-	-	-	-	-	-	-	-	-	-	-	-	-	-	-	-	-	-
238	642(B)	CONSTRUCTION STAKING LEVEL II		EA	1	-	-	-	-	-	-	-	-	-	-	-	-	-	-	-	-	-	-	-	-	-	-	-	-
239	850(A)	SHEET ALUMINUM SIGNS	T-2	SF	33	-	-	-	-	-	-	-	-	0	13	0	9	2	0	0	7	0	2	0	0	0	0	0	0
240	851(C)	1-1/2" SQUARE TUBE POST		LF	9	-	-	-	-	-	-	-	-	0	0	0	2	2	0	0	5	0	2	0	0	0	0	0	0

PRINT DATE: 08/07/2020 M:\City_of_Tulsa\18TULO2_MZ6028_Tupelo_Creek_Drainage\Design\Drawings\18TULO2_PAY_ITEMS_AND_NOTES.dwg

LICENSED PROFESSIONAL ENGINEER
BENJAMIN W. FLETCHER
24921
OKLAHOMA

8/7/2020

PAY ITEMS – NON-PARTICIPATING

PROJECT #144628-W, TMUA-W 18-16

MAINTENANCE ZONE 6028-W
TUPELO CREEK DRAINAGE

CITY OF TULSA, OKLAHOMA
ENGINEERING SERVICES DEPARTMENT

PLANS AND ESTIMATES PREPARED BY:
Meshek & Associates, L.L.C.
1437 S. Boulder Avenue, Suite 1550 Tulsa, OK 74119 (918)392-5620

REVISION	BY	DATE

PLAN SCALE: N/A
PROFILE SCALE: HORIZONTAL: N/A VERTICAL: N/A

DRAWN	SCB	08/20
DESIGNED	BWF	08/20
SURVEY	AB	08/18
PROJ. MGR.		
LEAD ENGR.		
FIELD MGR.		
RECOMMENDED DESIGN MANAGER		
FILE:	DRAWING:	
ATLAS PAGE NO. 235		

APPROVED:

CITY ENGINEER

DATE:

SHEET 4 OF 161 SHEETS

PROJECT NO. 144628-W

MAINTENANCE ZONE 6028-W

NON-PARTICIPATING ROADWAY & DRAINAGE PAY ITEMS

ITEM NO.	SPEC NO.	ITEM DESCRIPTION	NOTES	UNIT	QUANTITY	SHEET 55	SHEET 56	SHEET 57	SHEET 58	SHEET 59	SHEET 60	SHEET 61	SHEET 62	SHEET 69	SHEET 70	SHEET 71	SHEET 72	SHEET 73	SHEET 74	SHEET 75	SHEET 76	SHEET 77	SHEET 78	SHEET 80	SHEET 81	SHEET 82	SHEET 83	SHEET 84	SHEET 85
241	851(C)	1-3/4" SQUARE TUBE POST		LF	81	-	-	-	-	-	-	-	-	0	22	0	19	8	0	0	24	0	8	0	0	0	0	0	0
242	851(C)	2" SQUARE TUBE POST		LF	27	-	-	-	-	-	-	-	-	0	6	0	6	3	0	0	9	0	3	0	0	0	0	0	0
243	880(B)	CONSTRUCTION SIGNS 0 SF TO 6.25 SF	T-2,4,5	SD	2400	-	-	-	-	-	-	-	-	-	-	-	-	-	-	-	-	-	-	-	-	-	-	-	-
244	880(B)	CONSTRUCTION SIGNS 6.26 SF TO 15.99 SF	T-2,4,5	SD	1200	-	-	-	-	-	-	-	-	-	-	-	-	-	-	-	-	-	-	-	-	-	-	-	-
245	880(B)	CONSTRUCTION SIGNS 16.0 SF AND UP	T-2,4,5	SD	300	-	-	-	-	-	-	-	-	-	-	-	-	-	-	-	-	-	-	-	-	-	-	-	-
246	880(C)	BARRICADES (TYPE II)	T-2,4,5	SD	2400	-	-	-	-	-	-	-	-	-	-	-	-	-	-	-	-	-	-	-	-	-	-	-	-
247	880(C)	BARRICADES (TYPE III)	T-2,4,5	SD	1800	-	-	-	-	-	-	-	-	-	-	-	-	-	-	-	-	-	-	-	-	-	-	-	-
248	880(E)	WARNING LIGHTS (TYPE A)	T-5	SD	9900	-	-	-	-	-	-	-	-	-	-	-	-	-	-	-	-	-	-	-	-	-	-	-	-
249	880(G)	TUBE CHANNELIZERS	T-2,4	SD	18000	-	-	-	-	-	-	-	-	-	-	-	-	-	-	-	-	-	-	-	-	-	-	-	-
250	880(I)	FLAGGER	T-6	FD	300	-	-	-	-	-	-	-	-	-	-	-	-	-	-	-	-	-	-	-	-	-	-	-	-
251	COT 625	REMOVAL OF TRAFFIC SIGNS		EA	15	-	-	-	-	-	-	-	-	-	-	-	-	-	-	-	-	-	-	-	-	-	-	-	-
252	(SP) COT 643	CONTRACTOR'S QUALITY CONTROL		EA	1	-	-	-	-	-	-	-	-	-	-	-	-	-	-	-	-	-	-	-	-	-	-	-	-
253	SPECIAL	PROJECT SIGN (CITY OF TULSA) STD. 102	T-7	EA	1	-	-	-	-	-	-	-	-	1	-	-	-	-	-	-	-	-	-	-	-	-	-	-	-
254	SPECIAL	TYPE I AC PATCH	S-21	CY	257	-	-	-	-	-	-	-	-	0	0	75	135	0	0	0	0	6	41	0	0	0	0	0	0
255	SPECIAL	STANDARD SIDEWALK RAMP (TYPE A)		EA	2	-	-	-	-	-	-	-	-	0	0	0	0	2	0	0	0	0	0	0	0	0	0	0	0
256	SPECIAL	CELLFILL	D-8 G-1 S-26	CY	10	-	-	-	-	-	-	-	-	0	0	0	0	0	0	0	0	0	0	0	0	0	0	0	0
257	SPECIAL	URBAN RIGHT-OF-WAY RESTORATION	G-5,6,7,8,9,10	EA	1	-	-	-	-	-	-	-	-	-	-	-	-	-	-	-	-	-	-	-	-	-	-	-	-
258	SPECIAL	OWNER ALLOWANCE		ALLOW	1	-	-	-	-	-	-	-	-	-	-	-	-	-	-	-	-	-	-	-	-	-	-	-	-

NON-PARTICIPATING STORMWATER PIPE MATERIAL OPTION 1 (RCP)

ITEM NO.	SPEC NO.	ITEM DESCRIPTION	NOTES	UNIT	QUANTITY	SHEET 55	SHEET 56	SHEET 57	SHEET 58	SHEET 59	SHEET 60	SHEET 61	SHEET 62	SHEET 69	SHEET 70	SHEET 71	SHEET 72	SHEET 73	SHEET 74	SHEET 75	SHEET 76	SHEET 77	SHEET 78	SHEET 80	SHEET 81	SHEET 82	SHEET 83	SHEET 84	SHEET 85
259	613(A)	18" R.C. PIPE CLASS III (RCP) W/ OMNIFLEX GASKETS, COMPLETE IN PLACE	D-8,12,13	LF	22	-	-	-	-	-	-	-	-	0	14	0	8	0	0	0	0	0	0	0	0	0	0	0	0
260	613(A)	24" R.C. PIPE CLASS III (RCP) W/ OMNIFLEX GASKETS, COMPLETE IN PLACE	D-8,12,13	LF	188	-	-	-	-	-	-	-	-	0	128	0	60	0	0	0	0	0	0	0	0	0	0	0	0
261	613(A)	30" R.C. PIPE CLASS III (RCP) W/ OMNIFLEX GASKETS, COMPLETE IN PLACE	D-8,12,13	LF	19	-	-	-	-	-	-	-	-	0	19	0	0	0	0	0	0	0	0	0	0	0	0	0	0

NON-PARTICIPATING STORMWATER PIPE MATERIAL OPTION 2 (CPP)

ITEM NO.	SPEC NO.	ITEM DESCRIPTION	NOTES	UNIT	QUANTITY	SHEET 55	SHEET 56	SHEET 57	SHEET 58	SHEET 59	SHEET 60	SHEET 61	SHEET 62	SHEET 69	SHEET 70	SHEET 71	SHEET 72	SHEET 73	SHEET 74	SHEET 75	SHEET 76	SHEET 77	SHEET 78	SHEET 80	SHEET 81	SHEET 82	SHEET 83	SHEET 84	SHEET 85
262	COT 215	(SP) 18" CORRUGATED POLYPROPYLENE PIPE (CPP), COMPLETE IN PLACE	D-13,14,15	LF	22	-	-	-	-	-	-	-	-	0	14	0	8	0	0	0	0	0	0	0	0	0	0	0	0
263	COT 215	(SP) 24" CORRUGATED POLYPROPYLENE PIPE (CPP), COMPLETE IN PLACE	D-13,14,15	LF	188	-	-	-	-	-	-	-	-	0	128	0	60	0	0	0	0	0	0	0	0	0	0	0	0
264	COT 215	(SP) 30" CORRUGATED POLYPROPYLENE PIPE (CPP), COMPLETE IN PLACE	D-13,14,15	LF	19	-	-	-	-	-	-	-	-	0	19	0	0	0	0	0	0	0	0	0	0	0	0	0	0

PRINT DATE: 08/07/2020 M:\City_of_Tulsa\18TUL02_MZ6028_Tupelo_Creek_Drainage\Design\Drawings\18TUL02_PAY_ITEMS_AND_NOTES.dwg

BENJAMIN W. FLETCHER 24921 LICENSED PROFESSIONAL ENGINEER OKLAHOMA

8/7/2020

PAY ITEMS – NON-PARTICIPATING

PROJECT #144628-W, TMUA-W 18-16

MAINTENANCE ZONE 6028-W
TUPELO CREEK DRAINAGE

CITY OF TULSA, OKLAHOMA
ENGINEERING SERVICES DEPARTMENT

PLANS AND ESTIMATES PREPARED BY:
Meshek & Associates, L.L.C.
1437 S. Boulder Avenue, Suite 1550 Tulsa, OK 74119 (918)392-5620

REVISION	BY	DATE

PLAN SCALE: N/A
PROFILE SCALE
HORIZONTAL: N/A
VERTICAL: N/A

DRAWN	SCB	08/20
DESIGNED	BWF	08/20
SURVEY	AB	08/18
PROJ. MGR.		
LEAD ENGR.		
FIELD MGR.		
RECOMMENDED		
DESIGN MANAGER		
FILE:		
DRAWING:		
ATLAS PAGE NO. 235		

APPROVED:

CITY ENGINEER
DATE:
SHEET 5 OF 161 SHEETS

PAY ITEM NOTES (11/14/2018)

EARTHWORK / EROSION CONTROL / SITE PREPARATION (E1 – E11)

E–1: ALL COSTS FOR REMOVING TREES, SHRUBS, STUMPS, POSTS, AND ALL OTHER DEBRIS AND/OR OBSTRUCTIONS NOT COVERED BY A SEPARATE PAY ITEM ARE INCLUDED IN THE PRICE BID.

E–2: ALL EXISTING DRAINAGE STRUCTURES SHALL BE CLEANED AND CLEARED OF ALL SEDIMENTATION AND DEBRIS TO THE RIGHT OF WAY. COST OF CLEARING SHALL BE INCLUDED IN THE PRICE BID.

E–3: THE CONTRACTOR SHALL BE PAID FOR UNCLASSIFIED EXCAVATION ON THE BASIS OF PLAN QUANTITY. ANY ADDITIONAL EXCAVATION REQUIRED OR OVERRUN OF PLAN QUANTITY WILL BE PAID FOR ON THE BASIS OF UNIT PRICE BID FOR THE ITEM. CONTRACTOR SHALL BE RESPONSIBLE FOR PROVIDING ADEQUATE SURVEY TO VERIFY ANY ADDITIONAL QUANTITIES.

E–4: UNCLASSIFIED EXCAVATION INCLUDES REMOVAL OF AGGREGATE BASE AND MODIFIED SUBGRADE UNDER EXISTING PAVEMENT TO BE REPAIRED.

E–5: THIS QUANTITY INCLUDES AN ADDITIONAL XX% ABOVE PLAN QUANTITY FOR UNDERCUTTING OF UNSUITABLE SUBGRADE MATERIAL OR ADDITIONAL PATCHING AS DIRECTED BY THE ENGINEER.

E–6: THE CONTRACTOR SHALL BE RESPONSIBLE FOR CONTROL AND MAINTENANCE OF THE STORM WATER DRAINAGE FROM THE CONSTRUCTION SITE. STORM WATER PONDING ON THE CONSTRUCTION SITE THAT IS THE RESULT OF CONSTRUCTION WILL NOT BE ALLOWED. ALL COST ASSOCIATED WITH STORM WATER MANAGEMENT, AS WELL AS REMOVAL OF ALL SILT AND DEBRIS FROM ALL DRAINAGE STRUCTURES, STORM SEWER PIPES AND APPURTENANCES WITHIN THE PROJECT LIMITS AT END OF PROJECT, SHALL BE INCLUDED IN THE UNIT PRICE BID FOR THIS ITEM.

E–7: EROSION PROTECTION SHALL BE PLACED AS FOLLOWS:
A) AROUND INLETS TO PREVENT INFLOW OF ERODED MATERIAL INTO STORM SEWER SYSTEM;
B) IN LOCATIONS THROUGHOUT PROJECT SITE, AS DETERMINED BY THE ENGINEER, TO PREVENT WASH OF ERODED MATERIAL ONTO ADJACENT PROPERTY;
C) FOR ENTIRE DURATION OF PROJECT, WITH MAINTENANCE AND REPLACEMENTS, AS DIRECTED BY THE ENGINEER;
D) WITH PERIODIC REMOVAL OF SEDIMENT IN ACCORDANCE WITH STORMWATER MANAGEMENT PLAN.
ALL COST FOR ITEMS A–D ABOVE SHALL BE INCLUDED IN UNIT PRICE BID FOR THIS ITEM.

E–8: PRICE BID SHALL INCLUDE MAINTENANCE, SEDIMENT REMOVAL, DISPOSAL, AND REMOVAL OF FILTERS AT PROJECT COMPLETION.

E–9: NOT USED.

E–10: ESTIMATED QUANTITY IS BASED ON SODDING OF ALL DISTURBED AREAS OUTSIDE THE FINAL PAVING LIMITS AND WITHIN THE FINAL GRADING LIMITS AS INDICATED BY THE TOP–OF–CUT/TOE–OF–SLOPE LINE ON THE PLANS (EXCLUDING SURFACES OF STRUCTURES, FIXTURES AND APPURTENANCES). SOD SHALL BE OF LIKE–KIND TO EXISTING SOD. PRICE BID INCLUDES PLACEMENT AND COMPACTION OF SUITABLE BACKFILL. ANY EXISTING GRASSED AREAS BEYOND THE ABOVE STATED LIMITS THAT ARE DAMAGED AS A RESULT OF CONSTRUCTION OPERATIONS SHALL BE RESODDED TO THE SATISFACTION OF THE ENGINEER AT THE CONTRACTOR'S SOLE EXPENSE.

E–11: COST OF WATERING AND FERTILIZING SHALL BE INCLUDED. FERTILIZERS SHALL BE 10–20–10 AND SHALL BE APPLIED AT THE RATE OF 1.5 LBS PER 10 SQ YDS. FERTILIZER SHALL BE APPLIED PER SECTION 230.04H OF ODOT STANDARD SPECIFICATIONS. WATERING SHALL BE APPLIED AS NECESSARY UNTIL VEGETATION IS ESTABLISHED OR UNTIL THE WORK IS ACCEPTED AS COMPLETE.

SURFACING / STRUCTURES (S1 – S21)

S–1: TYPE A AGGREGATE BASE WAS ESTIMATED TO BE USED AS THE BASE MATERIAL FOR 90% OF THE PATCHING. QUICK SET FLOWABLE FILL WAS ESTIMATED TO BE USED AS THE BASE MATERIAL FOR 10% OF THE PATCHING. ACTUAL QUANTITIES TO BE DETERMINED BY THE ENGINEER.

S–2: INCLUDES COMPACTION OF AGGREGATE TO 98% AASHTO T180 MODIFIED PROCTOR.

S–3: SEPARATOR FABRIC SHALL BE USED AT ALL PAVEMENT PATCHES AND RECONSTRUCTION SECTIONS. THE SEPARATOR FABRIC SHALL BE CUT AND OVERLAPPED A MINIMUM OF 2 FT AT ALL EDGES OF THE REPAIR.

S–4: FABRIC REINFORCEMENT SHALL BE USED ON OVERLAY AREAS. THE COST OF BITUMINOUS BINDER FOR FABRIC REINFORCEMENT SHALL BE INCLUDED IN THE UNIT COST OF THIS PAY ITEM. THE BITUMINOUS BINDER SHALL MEET ODOT STANDARD SPECIFICATIONS AND THE RECOMMENDATIONS OF THE FABRIC REINFORCEMENT MANUFACTURER.

S–5: THE COST OF TACK COAT, EDGE JOINT SEAL MATERIAL AND SCREENINGS FOR BLOTTING, AND ALL LABOR ASSOCIATED WITH THESE ITEMS, SHALL BE INCLUDED IN ASPHALT CONCRETE.

S–6: ESTIMATED AT 112 LBS PER SQ YD PER 1 INCH THICK.

S–7: ODOT PAY FACTOR FOR AVERAGE LOT DENSITY SHALL NOT BE USED FOR THIS PROJECT. FAILURE TO REACH AVERAGE LOT DENSITY OF 92%–97% WILL RESULT IN REJECTION OF WORK.

S–8: A HIGHER GRADE OF ASPHALT BINDER THAN IS INDICATED ON THE PLANS MAY BE USED, BUT AT NO ADDITIONAL COST TO THE CITY.

BINDER GRADE	MESALs	ADT[1]	NOTES
PG 64–22 OK	3	<5,000	USE WHEN MORE THAN 4–6 INCHES BELOW THE SURFACE. ALSO USE FOR SHOULDERS, DRIVEWAYS, BELOW PCC, AND TEMPORARY CONSTRUCTION
PG 70–28 OK	10	<10,000	USE ONLY IN THE TOP 4–6 INCHES FOR DRIVING LANES
PG 76–28 OK	>=10	>=10,000	USE ONLY IN THE TOP 4–6 INCHES FOR DRIVING LANES
PG 76–28 E	–	–	CONTACT ODOT MATERIALS DIVISION FOR RECOMMENDED USE.

S–9: THIS ITEM INCLUDES ALL COSTS ASSOCIATED WITH COLD MILLING AND TO PROVIDE BUTT JOINTS AS REQUIRED. NO ADDITIONAL PAYMENT SHALL BE MADE FOR COLD MILLING BEYOND THE AVERAGE DEPTH SHOWN ON THE TYPICAL SECTIONS.

S–10: FOR P.C. CONCRETE TYPICAL SECTIONS, CONTRACTOR MAY SUBSTITUTE INTEGRAL CURB FOR CURB & GUTTER, AND VICE VERSA, ONLY WITH APPROVAL OF THE ENGINEER, WITH NO ADJUSTMENT MADE TO UNIT PRICE OR QUANTITY.

S–11: CONCRETE PAVEMENT SHALL BE COMPLETE IN PLACE. NO PARTIAL OR FINAL PAYMENT SHALL BE MADE UNTIL PAVEMENT HAS BEEN SAWED AND SEALED. ANY SECTIONS OF PAVEMENT WITH UNAPPROVED DEVIATIONS FROM THE JOINT LAYOUT PROVIDED IN THE PLANS MAY BE REJECTED AT THE DISCRETION OF THE ENGINEER.

S–12: THE USE OF FLY–ASH IN CONCRETE IS PROHIBITED.

S–13: INCLUDES ALL COST OF SAWED JOINTS AND SEALING OF ALL JOINTS INCLUDING LONGITUDINAL JOINTS.

S–14: NOT USED.

S–15: THIS ITEM SHALL BE MEASURED AS THE ACTUAL AMOUNT OF CURB AND/OR GUTTER INSTALLED. NO PAYMENT WILL BE MADE FOR CURB AND/OR GUTTER THROUGH DRIVEWAYS AND INLETS.

S–16: CURB, GUTTER, AND/OR SIDEWALK ASSOCIATED WITH THE DRIVEWAY AND THROUGH THE DRIVEWAY IS INCLUDED IN THE COST OF THE DRIVEWAY.

S–17: ONE SIDEWALK PANEL ON EACH SIDE OF DRIVEWAYS SHALL BE A MINIMUM OF 6" THICK OR MATCH EXISTING DRIVEWAY THICKNESS, WHICHEVER IS GREATER. NO ADDITIONAL PAYMENT SHALL BE MADE FOR THE COST OF THE THICKENED SIDEWALK THROUGH THIS AREA.

S–18: NOT USED.

S–19: STANDARD BEDDING MATERIAL TO BE TYPE A AGGREGATE BASE COMPACTED TO 95% STANDARD PROCTOR DENSITY (AASHTO T–99). TYPE A AGGREGATE BASE IN THE ROADWAY SHALL BE COMPACTED TO 98% MODIFIED PROCTOR (AASHTO T–180).

S–20: QUANTITY SHALL BE MEASURED AND PAID FOR AS FOLLOWS:

A. FOR ANY CAST–IN–PLACE OR PRECAST REINFORCED CONCRETE BOX (RCB) LARGER THAN 4' BY 4', USE NEAT LINES THAT ARE 4" BELOW THE BOTTOM OF THE RCB AND 4'–0" BEYOND THE OUTSIDE WALL.

B. UNDER ROADWAY PAY QUANTITY SHALL BE PAID FOR FROM THE BOTTOM OF TRENCH, AS DESCRIBED, TO THE BOTTOM OF ROADWAY AGGREGATE BASE.

S–21: THIS PAY ITEM INCLUDES THE FOLLOWING:
A. SAW CUTTING
B. REMOVAL OF THE EXISTING CONCRETE AND/OR ASPHALTIC CONCRETE ROADWAY (CY)
C. TYPE S3 ASPHALTIC CONCRETE OR PC CONCRETE COMPLETE AND IN PLACE PER DETAIL
D. SEALING OF EDGES AND TACK COAT

DOES NOT INCLUDE THE FOLLOWING:
A. UNCLASSIFIED EXCAVATION
B. SUBGRADE METHOD B (SY)
C. SEPARATOR FABRIC (SY)
D. AGGREGATE BASE (TYPE A)
E. ASPHALT CONCRETE LEVELING OR SURFACE COURSE

S–22: NOT USED.

S–23: ITEM TO BE USED AT THE DISCRETION OF THE ENGINEER.

S–24: ITEM TO INCLUDE ALL LABOR AND MATERIALS FOR SHEET PILING.

S–25: ITEM TO INCLUDE ALL LABOR AND MATERIALS FOR SPEED HUMP.

S–26: ITEM TO BE CELLFILL OR APPROVED EQUAL. ADDITIONAL 18 CY WERE CALCULATED TO BE USED AT THE DISCRETION OF THE ENGINEER.

REMOVAL / ADJUSTMENT (R1 – R6)

R–1: WASTE MATERIAL TO BECOME THE PROPERTY OF THE CONTRACTOR AND SHALL BE REMOVED FROM THE SITE IN A MANNER APPROVED BY THE ENGINEER.

R–2: ALL SAW CUTTING AND REMOVAL SHALL BE INCLUDED IN THE COST OF THE ITEM TO BE ADJUSTED, REMOVED, REPAIRED, OR REPLACED.

R–3: PAY ITEM INCLUDES REMOVAL OF ALL STRUCTURES AND OBSTRUCTIONS WITHIN PROJECT LIMITS NOT SPECIFIED BY OTHER ITEMS OF WORK.

R–4: INCLUDES SAWING NOT INCLUDED IN OTHER ITEMS OF WORK.

R–5: ITEMS TO BE REMOVED MAY OR MAY NOT BE PRESENT IN ANY SPECIFIED CONDITION.

R–6: SHALL INCLUDE ALL COSTS ASSOCIATED WITH PLUGGING/ PATCHING HOLES IN EXISTING STRUCTURES TO REMAIN.

GENERAL (G1 – G10)

G–1: LOCATIONS TO BE DETERMINED IN THE FIELD AND WORK TO BE PERFORMED AT THE DIRECTION OF THE FIELD ENGINEER. QUANTITY IS ESTIMATED AND MAY BE OMITTED IN ITS ENTIRETY.

G–2: MAXIMUM OVERALL DOLLAR AMOUNT AND SCHEDULE OF PAYMENTS SHALL BE IN ACCORDANCE SECTION 641 OF THE OKLAHOMA DEPARTMENT OF TRANSPORTATION STANDARD SPECIFICATIONS, CURRENT EDITION. EXCLUDES MOBILIZATION FOR WATERLINE WORK.

G–3: CONSTRUCTION STAKING SHALL INCLUDE SURVEYING AND THE FURNISHING, PLACING, AND MAINTAINING OF THE CONSTRUCTION LAYOUT STAKES NECESSARY FOR THE PROPER COMPLETION AND INSPECTION OF THE ENTIRE PROJECT.

G–4: THE COST TO REPLACE REMOVED OR DAMAGED SECTION CORNERS AND ALL OTHER PERMANENT RIGHT OF WAY MARKERS SHALL BE INCLUDED IN THE PRICE BID FOR THIS ITEM. NO ADDITIONAL PAYMENT WILL BE MADE.

G–5: CONTRACTOR SHALL REPAIR ANY IRRIGATION SYSTEMS DAMAGED OR REQUIRING RELOCATION DURING THE CONSTRUCTION OF THIS PROJECT TO THE SATISFACTION OF THE PROPERTY OWNER AND CITY ARBORIST. COST SHALL BE INCLUDED IN THE PRICE BID.

G–6: ALL HOUSE NUMBERS SHALL BE REPLACED/ REESTABLISHED THROUGHOUT PROJECT LIMITS. COST TO BE INCLUDED IN URBAN RIGHT OF WAY RESTORATION. CONTRACTOR SHALL REESTABLISH DRAINS, ROOF DRAINS AND OTHER DRAINAGE THROUGH THE CURBS IN ACCORDANCE WITH CITY OF TULSA STANDARD 758. NO NEW CURB OUTLETS SHALL BE CONSTRUCTED WITHOUT APPROVAL OF THE ENGINEER.

G–7: AN INTERNATIONAL SOCIETY OF ARBORICULTURE (ISA) CERTIFIED ARBORIST SHALL OVERSEE ALL PLANTINGS AND/OR REMOVAL OF TREES. CONTACT CITY ARBORIST TO ACCEPT FINAL PLANTINGS.
CONTACT #: 918–596–2548

G–8: TREE GRATES ARE NOT ACCEPTABLE PER CITY ARBORIST. CONCRETE PAVERS ARE TO BE USED AS NECESSARY AROUND TREES.

G–9: CONTRACTOR SHALL COORDINATE WITH HOMEOWNERS TO RESET ALL PAVERS, LANDSCAPE STONE, PRIVATE SIDEWALKS AND FENCES THAT ARE DISTURBED DURING CONSTRUCTION OPERATIONS. ALL MATERIALS, LABOR, AND EQUIPMENT REQUIRED FOR RESETTING OF SUCH ITEMS IS TO BE INCLUDED IN PRICE BID FOR URBAN RIGHT OF WAY RESTORATION.

G–10: PAY ITEM INCLUDES ALL MOWING WITHIN THE RIGHT–OF–WAY AS DIRECTED DURING CONSTRUCTION.

G–10: PRICE BID FOR THIS ITEM INCLUDES INSTALLATION AND REMOVAL OF TEMPORARY FENCING. CONTRACTOR IS RESPONSIBLE FOR MAINTAINING TEMPORARY FENCING THROUGHOUT THE DURATION OF THE PROJECT.

DRAINAGE (D1 – D15)

D–1: THIS ITEM SHALL INCLUDE THE COST OF NEW MANHOLE FRAME AND COVER PER CITY OF TULSA STD NOS.752, 753, 754, 761, 762, 769A, 769B AND 775.

D–2: THE TOTAL COST FOR RUBBERIZED ASPHALT AND/OR SILICONE AT MANHOLES, VALVE BOXES, INLETS, AND INLET APRONS, SHALL BE INCLUDED.

D–3: NO MASONRY STRUCTURES SHALL BE CONSTRUCTED WITHIN THE RIGHT OF WAY.

D–4: ADDITIONAL DEPTH IN A MANHOLE SHALL BE MEASURED FROM 6FT AS MEASURED FROM THE TOP OF RIM TO THE LOWEST FLOWLINE.

D–5: ALL MANHOLES SHALL BE COMPLETE IN PLACE. THIS PAY ITEM INCLUDES FRAME, COVER, CONCRETE AND ALL OTHER INCIDENTALS REQUIRED FOR PLACEMENT.

D–6: NOT USED.

D–7: INCLUDES THE COST REQUIRED TO MAKE CONNECTION AND REMOVAL OF EXISTING INLETS. THE COST OF PC CONCRETE CURB AND GUTTER THROUGH THE INLET, 5' EACH SIDE OF THE INLET, AND THE PC CONCRETE INLET APRON SHALL BE INCLUDED. GRATE AND FLOWLINE ELEVATIONS SHALL MATCH EXISTING CONDITIONS UNLESS OTHERWISE NOTED IN THE PLANS.

D–8: QUICKSET FLOWABLE FILL SHALL BE USED TO BACKFILL AROUND STREET CURB INLETS AND REINFORCED CONCRETE PIPE, AS NEEDED, AT THE DIRECTION OF THE ENGINEER.

D–9: ALL INLETS, COMPLETE IN PLACE, SHALL BE CAST IN PLACE CONCRETE OR PRECAST CONCRETE. THIS PAY ITEM INCLUDES ANY INLET FRAME(S), GRATE(S), HOOD(S) AND CONCRETE REQUIRED FOR COMPLETE INSTALLATION OF STRUCTURE PER THE CONSTRUCTION DOCUMENTS.

D–10: ADDITIONAL DEPTH QUANTITIES SHALL BE MEASURED AND PAID FOR ALL INLETS EXCEEDING STANDARD DEPTH. STANDARD DEPTHS ARE AS FOLLOWS:

A) CAST IRON CURB INLET: 3.71 VF, MEASURED FROM CENTER ELEVATION OF LOWEST CAST IRON CURB TO FLOWLINE OF OUTLET PIPE.
B) RECESSED CURB INLET: 3.00 VF, MEASURED FROM TOP OF SLAB TO FLOWLINE OF OUTLET PIPE.
C) STANDARD DROP INLET: SEE STANDARD DETAILS 770, 771, 772 AND 773 – VARIES BASED ON PIPE SIZE, MEASURED FROM LOWEST ELEVATION OF INFLOW APRON TO FLOWLINE OF OUTLET PIPE.

LICENSED PROFESSIONAL ENGINEER
BENJAMIN W. FLETCHER
24921
OKLAHOMA
8/7/2020

PAY ITEM NOTES

PROJECT #144628–W, TMUA–W 18–16

MAINTENANCE ZONE 6028–W
TUPELO CREEK DRAINAGE

CITY OF TULSA, OKLAHOMA
ENGINEERING SERVICES DEPARTMENT

PLANS AND ESTIMATES PREPARED BY:
Meshek & Associates, L.L.C.
1437 S. Boulder Avenue, Suite 1550 Tulsa, OK 74119 (918)392–5620

REVISION	BY	DATE

PLAN SCALE	DRAWN	SCB	08/20	APPROVED:
N/A	DESIGNED	BWF	08/20	
	SURVEY	AB	08/18	
PROFILE SCALE	PROJ. MGR.			
HORIZONTAL: N/A	LEAD ENGR.			
	FIELD MGR.			
VERTICAL: N/A	RECOMMENDED DESIGN MANAGER			CITY ENGINEER
FILE:	DRAWING:			DATE:
ATLAS PAGE NO. 235				SHEET 6 OF 161 SHEETS

PRINT DATE: 08/07/2020 M:\City_of_Tulsa\18TUL02_MZ6028_Tupelo_Creek_Drainage\Design\Drawings\18TUL02_PAY_ITEMS_AND_NOTES.dwg

PAY ITEM NOTES (CONTINUED) (11/14/2018)

D–11: CAST IRON CURB INLET CONFIGURATION NAMING CONVENTION PROVIDED IN COT STANDARD NO. 755. SEPARATE DETAILS SHALL BE REFRENCED OR PROVIDED IN THE PLANS FOR NON–CITY–STANDARD INLETS.

STANDARD NAMING: CICI DES G(T) [W/AMH]

G: NUMBER OF GRATES.

T: LETTER(S) CORRESPONDING TO ARRANGEMENT OF CAST IRON HOODS TO BE INSTALLED UPSTREAM OF GRATES.

W/AMH: IF SHOWN, INLET TO BE CONSTRUCTED WITH ATTACHED ACCESS MANHOLE.

D–12: REINFORCED CONCRETE PIPE TO BE CLASS III. ALL REINFORCED CONCRETE PIPE AND MANHOLES TO BE SUPPLIED WITH AN OMNI–FLEX JOINT GASKET OR APPROVED EQUAL. MASTIC JOINT SEALANT SHALL NOT BE ALLOWED.

D–13: THIS PAY ITEM SHALL BE COMPLETE IN PLACE AND SHALL INCLUDE ALL PIPE, STANDARD BEDDING MATERIAL AND TRENCH EXCAVATION, JOINT GASKETS AND ALL OTHER INCIDENTALS. NO ADDITIONAL COST WILL BE MADE. PRIOR TO ACCEPTANCE, INTERIOR OF PIPE SHALL BE INSPECTED FOR DEFECTS USING SELF–PROPELLED MOBILE CLOSED–CIRCUIT CAMERA SYSTEM. NO LIFTING HOLES TO BE USED.

D–14: WHERE CORRUGATED POLYPROPYLENE PIPE CONNECTS TO REINFORCED CONCRETE STRUCTURES, CONTRACTOR SHALL ENSURE CONNECTIONS ARE WATER–TIGHT AND FULLY SEALED AGAINST SOIL INFILTRATION.

D–15: WHERE QUICKSET FLOWABLE FILL IS USED TO BACKFILL AROUND CORRUGATED POLYPROPYLENE PIPE, THE CONTRACTOR SHALL UTILIZE AN ANCHORING SYSTEM APPROVED BY THE ENGINEER PRIOR TO INSTALLATION. ALL COSTS FOR LABOR, EQUIPMENT AND MATERIALS REQUIRED TO IMPLEMENT APPROVED ANCHORING SYSTEM INCLUDED IN PRICE BID FOR CORRUGATED POLYPROPYLENE PIPE.

D–16: INCLUDES ALL LABOR AND MATERIALS ASSOCIATED WITH THE CONSTRUCTION AND PLACEMENT OF THE EDGE DRAIN CONDUIT–PERFORATED ACCORDING TO ODOT STD. PED–4–0, AND INCLUDES ALL LABOR AND MATERIALS FOR ROOF DRAIN TIE–INS TO THE EDGE DRAIN CONDUIT. ALL EDGE DRAIN CONDUIT–PERFORATED TO BE TIED TO INLETS TO DRAIN.

D–17: ADDITIONAL 18 CY WERE CALCULATED TO BE USED AT THE DISCRETION OF THE ENGINEER.

TRAFFIC (T1 – T7)

T–1: ALL TRAFFIC MATERIALS REMOVED SHALL BE HANDLED PER COT SPECIFICATION 625 REMOVAL OF TRAFFIC ITEMS.

T–2: REFLECTORIZED SHEETING ON SIGNS AND BARRICADES SHALL BE OF A CUBIC PRISMATIC TYPE AND SHALL MEET THE SPECIFICATIONS ESTABLISHED FOR ASTM D 4956–01 TYPE IX RETROREFLECTIVE SHEETING. REFLECTORIZED SHEETING ON DRUMS AND TUBE CHANNELIZERS SHALL BE OF A HIGH–INTENSITY TYPE AND SHALL MEET THE SPECIFICATIONS ESTABLISHED FOR ASTM D 4956–01 TYPE III RETROREFLECTIVE SHEETING.

T–3: ALL PLASTIC PAVEMENT MARKINGS SHALL BE EITHER:

EXTRUDED–APPLIED THERMOPLASTIC (USE ON ASPHALT PAVEMENT). THERMOPLASTIC PAVEMENT MARKINGS SHALL ONLY BE APPLIED WHEN THE SURFACE TEMPERATURE EXCEEDS 55°F FOR ALL OF THE SIX HOURS PRIOR TO INSTALLATION AND MAXIMUM WIND GUSTS ARE BELOW 15 MPH AT THE TIME OF APPLICATION. PRICE BID TO INCLUDE FLEX TABS OR LIKE KIND FOR POST CONSTRUCTION LANE MARKING/SEPARATION. MECHANICALLY APPLIED PREFORMED PLASTIC TAPE ("COLD TAPE") WILL NOT BE ACCEPTED.

OR

MULTI–POLYMER PAINT (USE ON CONCRETE PAVEMENT). MULTI–POLYMER PAVEMENT MARKINGS SHALL ONLY BE APPLIED 30 DAYS AFTER PAVING WHEN PAVEMENT SURFACE TEMPERATURE EXCEEDS 40°F FOR ALL OF THE SIX HOURS PRIOR TO INSTALLATION WITH A MINIMUM WIND CHILL TEMPERATURE OF 35°F. PRICE BID TO INCLUDE FLEX TABS OR LIKE KIND FOR POST CONSTRUCTION LANE MARKING/SEPARATION.

T–4: PAYMENT SHALL BE MADE ON A SIGN–DAY BASIS ONLY FOR TRAFFIC CONTROL DEVICES THAT ARE PROPERLY INSTALLED AND IN GOOD WORKING ORDER. COSTS FOR DELIVERY, INSTALLATION, RELOCATION, MAINTENANCE REMOVAL AND REPLACEMENT, AS NEEDED AT THE DISCRETION OF THE ENGINEER, INCLUDED IN UNIT PRICE BID.

T–5: IF WARNING LIGHTS ARE TO BE USED ON TRAFFIC CONTROL DEVICES, TYPE "A" LIGHTS SHALL ONLY BE USED ON DEVICES WARNING OF UNEXPECTED HAZARDS, AND SHALL NOT BE USED FOR DELINEATION OF THE TRAVELED WAY. ONLY TYPE "C" WARNING LIGHTS SHALL BE USED FOR DELINEATION OF THE TRAVELED WAY, AND TYPE "C" LIGHTS SHALL NOT BE USED FOR ANY OTHER PURPOSE.

T–6: THE PAY ITEM FOR FLAGGER SHALL BE PAID FOR ON A FLAG DAY (F.D.) BASIS. ONE F.D. IS ONE COMPLETE WORKDAY PERFORMED BY THE CONTRACTOR AS SET FORTH IN THE CONTRACT DOCUMENTS AND SPECIFICATIONS.

T–7: PRICE BID FOR THIS ITEM INCLUDES INSTALLATION, MAINTENANCE AND SUBSEQUENT REMOVAL OF PROJECT SIGN.

LICENSED PROFESSIONAL ENGINEER
BENJAMIN W. FLETCHER
24921
OKLAHOMA

8/7/2020

REVISION	BY	DATE

PAY ITEM NOTES

PROJECT #144628–W, TMUA–W 18–16

MAINTENANCE ZONE 6028–W
TUPELO CREEK DRAINAGE

CITY OF TULSA, OKLAHOMA
ENGINEERING SERVICES DEPARTMENT

PLANS AND ESTIMATES PREPARED BY:
Meshek & Associates, L.L.C.
1437 S. Boulder Avenue, Suite 1550 Tulsa, OK 74119 (918)392–5620

PLAN SCALE N/A	DRAWN	SCB	08/20	APPROVED:
	DESIGNED	BWF	08/20	
	SURVEY	AB	08/18	
PROFILE SCALE	PROJ. MGR.			
HORIZONTAL: N/A	LEAD ENGR.			
VERTICAL: N/A	FIELD MGR.			
	RECOMMENDED DESIGN MANAGER			CITY ENGINEER
FILE:	DRAWING:			DATE:
ATLAS PAGE NO. 235				SHEET 7 OF 161 SHEETS

PRINT DATE: 08/07/2020 M:\City_of_Tulsa\18TUL02_MZ6028_Tupelo_Creek_Drainage\Design\Drawings\18TUL02_PAY_ITEMS_AND_NOTES.dwg

GENERAL NOTES (9/12/2016)

1. ALL CONSTRUCTION AND MATERIALS SHALL BE IN ACCORDANCE WITH THE 2009 OKLAHOMA DEPARTMENT OF TRANSPORTATION STANDARD SPECIFICATIONS FOR HIGHWAY CONSTRUCTION AND THE CURRENT CITY OF TULSA ENGINEERING SERVICES DEPARTMENT'S STANDARD SPECIFICATIONS AND STANDARD DETAILS AND STANDARD DRAWINGS AND CITY OF TULSA SPECIAL PROVISIONS.

2. THE CONTRACTOR SHALL COMPLY WITH ALL FEDERAL, STATE AND LOCAL LAWS GOVERNING SAFETY, HEALTH AND SANITATION. THE CONTRACTOR SHALL PROVIDE ALL SAFEGUARDS, SAFETY DEVICES AND PROTECTIVE EQUIPMENT, AND TAKE ANY OTHER NEEDED ACTION ON AS HIS OWN RESPONSIBILITY OR AS THE ENGINEER MAY DETERMINE REASONABLY NECESSARY TO PROTECT PROPERTY IN CONNECTION WITH THE PERFORMANCE OF WORK COVERED BY THE CONTRACT.

3. PAY ITEMS SHALL BE AS SPECIFIED ON THE CITY OF TULSA OR ON THE ODOT STANDARD DRAWINGS EXCEPT AS MODIFIED BY THE CONTRACT.

4. THE CONTRACTOR SHALL DETERMINE THE EXACT LOCATION OF ALL EXISTING UTILITIES BEFORE COMMENCING WORK IN EACH AREA. THE CONTRACTOR IS FULLY RESPONSIBLE FOR ANY AND ALL DAMAGES WHICH MIGHT RESULT FROM HIS FAILURE TO LOCATE AND PRESERVE ANY AND ALL UTILITIES.

5. THE LOCATIONS OF THE UTILITIES ARE SHOWN ACCORDING TO ALL AVAILABLE INFORMATION. THE CONTRACTOR SHALL NOTIFY EACH UTILITY OWNER PRIOR TO COMMENCEMENT OF WORK TO VERIFY BOTH HORIZONTAL AND VERTICAL LOCATIONS. THE FOLLOWING IS A LIST OF UTILITY OWNERS; AT&T, PUBLIC SERVICE COMPANY OF OKLAHOMA (AEP), OKLAHOMA NATURAL GAS (ONG), COX COMMUNICATIONS, MCI/VERIZON, EASYTEL COMMUNICATIONS, WELLSCO VALLOR TELECOM, CITY OF TULSA–WATER AND SEWER, CITY OF TULSA–TRAFFIC OPERATIONS. SEE TITLE SHEET FOR CONTACT INFORMATION.

6. THE CONTRACTOR SHALL GIVE THE NOTIFICATION CENTER OF OKLAHOMA ONE–CALL SYSTEM, INC. NOTICE OF ANY EXCAVATION NO SOONER THAN TEN DAYS NOR LATER THAN 48 HOURS, EXCLUDING SATURDAYS, SUNDAYS AND LEGAL HOLIDAYS, PRIOR TO THE COMMENCEMENT OF WORK. PHONE 1–800–522–6543.

7. THE CONTRACTOR SHALL TAKE REASONABLE PRECAUTIONS TO PREVENT EXCESS MOISTURE FROM INCLEMENT WEATHER OR OTHER SOURCES FROM ENTERING ANY STREET EXCAVATION. IF EXCESS MOISTURE DOES ENTER THE EXCAVATION THROUGH THE NEGLIGENCE OF THE CONTRACTOR AND THE ADJOINING PAVEMENT IS ADVERSELY EFFECTED BY THE EXCESS MOISTURE, THE CONTRACTOR SHALL REPLACE THE ADJOINING PAVEMENT AND SUBBASE AT HIS SOLE EXPENSE.

8. THE CONTRACTOR SHALL PRESERVE THE INTEGRITY OF THE SANITARY SEWER STRUCTURES AND ALL OTHER UTILITY STRUCTURES WITHIN THE PROJECT EXTENTS.

9. THE CONTRACTOR SHALL WORK IN COOPERATION WITH THE CITY OF TULSA TO ESTABLISH, INSTALL, MAINTAIN, AND OPERATE COMPLETE, ADEQUATE, AND SAFE TRAFFIC CONTROLS DURING THE ENTIRE CONSTRUCTION PERIOD. ALL FLAGMEN, BARRICADES, AND TRAFFIC CONTROL DEVICES SHALL BE APPROVED BY THE FIELD ENGINEERING REPRESENTATIVE.

10. CONSTRUCTION SIGNAGE WILL BE INSTALLED IN A MANNER APPROVED BY THE ENGINEER, IN ACCORDANCE WITH CHAPTER VI OF THE MANUAL ON UNIFORM TRAFFIC CONTROL DEVICES, CURRENT ADDITION, AND APPLICABLE ODOT STANDARD DRAWINGS. THE CONTRACTOR SHALL PROVIDE A PROPOSED TRAFFIC CONTROL PLAN FOR APPROVAL BY THE ENGINEER PRIOR TO BEGINNING WORK.

11. THE CONTRACTOR SHALL NOTIFY THE CITY OF TULSA FIELD ENGINEERING, 918–596–9404, A MINIMUM OF 48 HOURS PRIOR TO COMMENCING WORK OR PRIOR TO REMOVING TRAFFIC SIGNS.

12. THE CONTRACTOR SHALL BE RESPONSIBLE FOR THE REPLACEMENT OF ALL EXISTING TRAFFIC SIGNS AND MARKINGS REMOVED OR DAMAGED AS LISTED IN THE SIGNAGE SCHEDULE FOR THE PROJECT. ALL SIGNS AND POLES PROVIDED SHALL BE NEW AND UNDAMAGED AND SHALL MEET THE REQUIREMENTS OF COT SPECIFICATION 608 TRAFFIC SIGNS. ALL TRAFFIC MATERIALS REMOVED SHALL BE HANDLED PER COT SPECIFICATION 625 REMOVAL OF TRAFFIC ITEMS.

13. THE CONTRACTOR WILL BE RESPONSIBLE FOR PREPARATION AND DISTRIBUTION OF A WRITTEN NOTICE TO RESIDENTS 48 HOURS PRIOR TO BEGINNING PAVEMENT REMOVAL AND MILLING AND OVERLAY OPERATIONS.

14. LOCAL AND THROUGH TRAFFIC SHALL BE MAINTAINED THROUGH THE PROJECT AT ALL TIMES.

15. CONTRACTOR TO COORDINATE WITH HOME OWNERS FOR STREET SHUT DOWNS AND DRIVEWAY ACCESS THROUGHOUT THE PROJECT.

16. ALL BROKEN CONCRETE, WASTE MATERIAL, AND OTHER DEBRIS SHALL BECOME THE PROPERTY OF THE CONTRACTOR AND SHALL BE REMOVED FROM THE LIMITS OF THE PROJECT AND DISPOSED OF IN A MANNER APPROVED BY THE ENGINEER. NO ADDITIONAL PAYMENT WILL BE MADE FOR THE DISPOSAL OF THIS MATERIAL.

17. ALL EXCAVATED MATERIAL NOT REQUIRED IN THE PROJECT SHALL BECOME THE PROPERTY OF THE CONTRACTOR AND SHALL BE DISPOSED OF BY THE CONTRACTOR IN A MANNER ACCEPTABLE TO THE ENGINEER WITHOUT COST TO THE CITY. THE CONTRACTOR WILL BE REQUIRED TO OBTAIN AN EARTH CHANGE PERMIT IF ANY MATERIAL IS STORED ON THE PROJECT SITE AND/OR DISPOSED OF WITHIN THE CITY LIMITS.

18. ALL TREES, BRUSH AND OTHER DEBRIS THAT MIGHT INTERFERE WITH THE FLOW OF WATER IS TO BE CLEANED OUT TO THE RIGHT–OF–WAY LINE IN A MANNER APPROVED BY THE ENGINEER. ALL COST TO BE INCLUDED IN THE PRICE BID FOR OTHER ITEMS OF WORK. TREES OUTSIDE THE FILL SLOPES AND THE TOP OF CUT SLOPES SHALL NOT BE DISTURBED EXCEPT WITH THE WRITTEN APPROVAL OF THE ENGINEER.

19. WHERE MATERIALS ARE TRANSPORTED IN THE PROSECUTION OF WORK, VEHICLES SHALL NOT BE LOADED BEYOND THE CAPACITY RECOMMENDED BY THE VEHICLE MANUFACTURER OR AS PRESCRIBED BY ANY FEDERAL, STATE OR LOCAL LAW OR REGULATION.

20. ANY DAMAGE TO THE ROADWAY PAVEMENT, CURB, DRIVEWAYS OR SIDEWALK CAUSED BY THE CONTRACTOR'S OPERATION SHALL BE REPAIRED TO THE ENGINEER'S SATISFACTION AND SHALL BE ACCOMPLISHED AT THE CONTRACTOR'S SOLE EXPENSE. ALL DISTURBED ITEMS SHALL BE REPAIRED TO MATCH EXISTING MATERIALS AND PATTERNING.

21. IF THE CONTRACTOR ENCOUNTERS VOIDS WHEN PATCHING STREETS, THE CONTRACTOR SHALL CALL FIELD ENGINEERING AT 918–596–7814 FOR AN INSPECTION BEFORE PROCEEDING WITH WORK.

22. THE PROJECT SHALL BE CONSTRUCTED WITH CONTINUOUS FLOW OF MATERIAL SUPPLIED TO THE PROJECT SUCH THAT THE LAYDOWN MACHINE WILL REMAIN IN MOTION. ANY DELAY IN FORWARD PROGRESSION OF THE LAYDOWN MACHINE MAY REQUIRE A TRANSVERSE JOINT AS DIRECTED BY THE ENGINEER.

23. NO FLY ASH IS ALLOWED TO BE USED ON THIS PROJECT.

24. PHYSICAL TESTING FOR QUALITY ASSURANCE SHALL BE FURNISHED BY THE CITY.

25. CONTRACTOR IS RESPONSIBLE FOR ALL NECESSARY QUALITY CONTROL TESTING TO ENSURE THAT PROJECT REQUIREMENTS ARE MET.

26. MASONRY STRUCTURES SHALL NOT BE CONSTRUCTED WITHIN THE STREET RIGHT–OF–WAY.

27. ALL CONCRETE CURB AND GUTTERS SHALL BE MONOLITHIC POURS. DOWELED–ON CURBS WILL NOT BE ALLOWED.

28. NO LIFTING HOLES WILL BE ALLOWED ON ANY REINFORCED CONCRETE PIPES OR REINFORCED CONCRETE BOXES.

29. CURB RAMP CONSTRUCTION SHALL COMPLY WITH THE CURRENT AMERICANS WITH DISABILITIES ACT STANDARDS.

30. REFLECTORIZED SHEETING ON SIGNS AND BARRICADES SHALL BE OF A CUBIC PRISMATIC TYPE AND SHALL MEET THE SPECIFICATIONS ESTABLISHED FOR ASTM D 4956–01 TYPE IX RETROREFLECTIVE SHEETING. REFLECTORIZED SHEETING ON DRUMS AND TUBE CHANNELIZERS SHALL BE OF A HIGH–INTENSITY TYPE AND SHALL MEET THE SPECIFICATIONS ESTABLISHED FOR ASTM D 4956–01 TYPE III RETROREFLECTIVE SHEETING.

31. ALL SANITARY AND STORM SEWER MANHOLE CASTINGS AND LIDS THAT ARE LOCATED IN THE STREET AND ARE DISTURBED BY THE CONTRACTOR SHALL BE REPLACED WITH NEW LIDS AND CASTINGS AND THE OLD ONES SHALL BE SALVAGED AND DELIVERED TO THE METAL RECYCLE BINS IN THE STOCKROOM AREA AT SEWER OPERATIONS AND MAINTENANCE, 9319 E. 42ND STREET NORTH, BETWEEN THE HOURS OF 7:30 AM AND 3:00 PM MONDAY THROUGH FRIDAY.

32. THE SIGN PLACEMENT STATIONING AND LOCATIONS SHOWN ON THE PLAN SHEETS AND SUMMARY SHEETS ARE APPROXIMATE. EXACT STATIONING AND LOCATIONS SHALL BE VERIFIED BY THE CONTRACTOR SO THAT THE SIGN IS INSTALLED IN ACCORDANCE WITH CITY OF TULSA STANDARDS, CURRENT AMERICANS WITH DISABILITIES ACT STANDARDS, AND THE MANUAL ON UNIFORM TRAFFIC CONTROL DEVICES IN ORDER TO PROVIDE OPTIMUM VISIBILITY TO THE ONCOMING/APPROACHING MOTORIST. IF A PROPOSED LOCATION CONFLICTS WITH OTHER SIGNS, UTILITIES, OR OTHER ROADWAY FEATURES, THE ENGINEER SHALL BE NOTIFIED.

33. POST LENGTHS SHOWN ON SIGN SUMMARY ARE APPROXIMATE. EXACT LENGTHS SHALL BE DETERMINED BY A FIELD SURVEY CONDUCTED BY THE CONTRACTOR.

34. ALL ASPHALT STREETS THAT ARE TO BE RECONSTRUCTED SHALL BE LEFT WITH A DRIVABLE SURFACE AT ALL TIMES. THE CONTRACTOR WILL NOT BE ALLOWED TO MILL OFF ALL THE ASPHALT BEFORE EXCAVATION BEGINS.

35. THE CONTRACTOR SHALL REPLACE ANY SECTION CORNERS OR OTHER PERMANENT RIGHT OF WAY MARKERS REMOVED OR DISTURBED AS A RESULT OF THE CONSTRUCTION OF THIS PROJECT. REPLACEMENT OF SECTION CORNERS OR ANY OTHER MONUMENTS SHALL BE PERFORMED BY A LICENSED LAND SURVEYOR AUTHORIZED TO PERFORM WORK IN THE STATE OF OKLAHOMA.

36. THE CONTRACTOR SHALL BE RESPONSIBLE FOR THE CONTROL AND MAINTENANCE OF THE STORMWATER DRAINAGE. STORMWATER PONDING ON THE CONSTRUCTION SITE THAT IS THE RESULT OF CONSTRUCTION WILL NOT BE ALLOWED.

37. STRAW OR HAY BALES AS STORMWATER BEST MANAGEMENT PRACTICES ARE NO LONGER ALLOWED ON CONSTRUCTION PROJECTS.

38. THE CONTRACTOR MUST CALL 1–800–458–4251 IMMEDIATELY IF A NATURAL GAS PIPELINE IS CUT, DAMAGED, OR OTHERWISE DISTURBED.

39. PRIOR TO FINAL ACCEPTANCE, ALL EXPOSED CURB SURFACES SHALL BE CLEANED OF ALL DICOLORATION SUCH AS ASPHALT STAIN, TIRE MARKS, OR OTHER DISFIGUREMENT.

40. ALL FEATURES OF THIS PROJECT INCLUDING, BUT NOT LIMITED TO, SIDEWALKS, CURB RAMPS, AND CROSSWALKS SHALL COMPLY WITH THE AMERICANS WITH DISABILITIES ACT, ACCESSIBILITY GUIDELINES, AND THE PROPOSED ACCESSIBILITY GUIDELINES FOR PEDESTRIAN FACILITIES IN THE PUBLIC RIGHT–OF–WAY, PUBLISHED ON JULY 26, 2011 BY THE U.S. ACCESS BOARD. WHERE SPATIAL LIMITATIONS OR EXISTING FEATURES WITHIN THE LIMITS OF THE PROJECT PREVENT FULL COMPLIANCE WITH THIS ACT, THE CONTRACTOR SHALL IMMEDIATELY NOTIFY THE ENGINEER UPON DISCOVERY OF SUCH FEATURES. THE CONTRACTOR SHALL NOT PROCEED WITH ANY ASPECT OF THE WORK, WHICH IS NOT IN FULL COMPLIANCE WITH THE ADA WITHOUT PRIOR WRITTEN APPROVAL FROM THE ENGINEER. ANY WORK, WHICH IS NOT PERFORMED WITHIN THE GUIDELINES OF THE ADA, FOR WHICH THE CONTRACTOR DOES NOT HAVE WRITTEN APPROVAL, SHALL BE CORRECTED AT THE CONTRACTOR'S EXPENSE.

41. ALL TRENCH WIDTHS & BEDDING MATERIALS SHALL BE AS SHOWN ON COT STANDARD PIPE BEDDING DETAIL, STANDARD NO. 751. SPECIFIED TRENCH WIDTHS SHALL BE MAINTAINED FULL DEPTH FROM THE FLOWLINE TO THE GRADING TEMPLATE. THE CONTRACTOR SHALL KEEP THE OPEN TRENCH DRAINED.

42. THE CONTRACTOR SHALL NOTIFY THE METROPOLITAN TULSA TRANSIT AUTHORITY (MTTA), ERIC SMITH 918–830–0024, A MINIMUM OF 48 HOURS PRIOR TO THE COMMENCING WORK, LANE CLOSURES OR PRIOR TO DETOURING TRAFFIC.

43. CONTRACTOR SHALL NOT STORE MATERIAL OR EQUIPMENT IN THE FLOODPLAIN.

APPLICABLE CITY OF TULSA STANDARD DRAWINGS AND DETAILS REFERENCES:

PROJECT SIGN
- STD NO. 102 – PROJECT SIGN

EROSION CONTROL METHODS
- STD NO. 126 – SILT FENCE AND CONSTRUCTION ENTRANCE

WATER LINE BEDDING AND TRENCH
- STD NO. 301 – DUAL 3/4" LONG SERVICE FROM 1" FEED
- STD NO. 304 – BEDDING DETAIL RIGID PIPE
- STD NO. 305 – BEDDING DETAIL SEMI–RIGID PIPE
- STD NO. 306 – TRENCH DETAIL – CONSTRUCTION ADJACENT TO ROADWAY

FIRE HYDRANT
- STD NO. 309 – STANDARD DETAIL FIRE HYDRANT

VALVE BOX
- STD NO. 313 – STANDARD DETAIL VALVE BOX

THRUST BLOCKS AND TRENCH CONDITIONS
- STD NO. 315 – STANDARD DETAIL THRUST BLOCKS AND TRENCH CONDITIONS

TRAFFIC SIGNS & SIGNS
- STD NO. 608A – STREET NAME SIGNS
- STD NO. 608B – TRAFFIC SIGNS
- STD NO. 625 – REMOVAL OF TRAFFIC ITEMS

METER SETTINGS
- STD NO. 501 – STANDARD METER SETTINGS FOR 5/8" X 3/4" AND 3/4" WATER SERVICE
- STD NO. 501A – STANDARD METER SETTINGS FOR 5/8" X 3/4" AND 3/4" WATER SERVICE
- STD NO. 505 – METER CAN WITH RIM AND LID FOR 5/8" X 3/4" AND 1" WATER METER CAN INSTALLATION

RESIDENTIAL DRIVEWAYS
- STD NO. 702 – RESIDENTIAL CONCRETE DRIVEWAY ASPHALT STREET

PAVEMENT CUTS FOR UTILITIES
- STD NO. 713 – STANDARD DETAIL FOR PAVEMENT REMOVAL AND REPLACEMENT
- STD NO. 714 – STANDARD DETAIL FOR PAVEMENT CUTS
- STD NO. 725 – STANDARD PAVEMENT PATCH AND REPAIR

ASPHALT PAVEMENT – DETAILS
- STD NO. 726 – ASPHALT PAVEMENT STANDARD DETAILS
- STD NO. 730 – STANDARD ASPHALT PAVEMENT CUT AND REPAIR

CONCRETE PAVEMENT – DETAILS
- STD NO. 727 – CONCRETE PAVEMENT STANDARD DETAILS FOR RESIDENTIAL AND COLLECTOR STREETS
- STD NO. 729 – CONCRETE PAVEMENT STANDARD DETAILS FOR RESIDENTIAL AND COLLECTOR STREETS

STORM PIPES, DRAINAGE INLETS, GRATES, AND HOODS
- STD NO. 751 – STANDARD PIPE BEDDING DETAIL FOR STORM SEWER
- STD NO. 753 – STANDARD DETAIL FRAME AND LID FOR 4' AND 5' I.D. STORMWATER MANHOLE
- STD NO. 755 – CONFIGURATIONS OF CAST IRON CURB INLETS
- STD NO. 761 – STANDARD INLETS AND GRATES W/ACCESS MANHOLE BACK OF CURB
- STD NO. 762 – PRECAST STANDARD INLETS AND GRATES W/ACCESS MANHOLE BACK OF CURB
- STD NO. 764 – STANDARD REINFORCED CONCRETE STORM WATER INLETS
- STD NO. 765 – STANDARD STORM WATER FRAMES
- STD NO. 766 – STANDARD STORM WATER GRATES
- STD NO. 767 – STANDARD CAST IRON CURB
- STD NO. 775 – STANDARD PRECAST CONCRETE STORMWATER MANHOLE
- STD NO. 784 – VERTICAL WALL CHANNEL (FOR REHAB AND REFERENCE ONLY)
- STD NO. 790 – STANDARD SIDEWALK RAMP

APPLICABLE ODOT STANDARDS:

HP1–2–01E	– STEEL PILING
PED–4–0	– PAVEMENT EDGE DRAIN
RCB–C2–10(2–12)	– RCB CULVERTS – BARREL DETAILS 10'–0" SPAN – DOUBLE CELL
SBI–4	– STANDARD BOX INSTALLATION
SSS–1–0	– SOLID SLAB SODDING
TSC2–3–0	– TEMPORARY SEDIMENT CONTROLS
TCS6–1	– TRAFFIC CONTROL STANDARD CHANNELIZING DEVICES
TCS8–1–0	– CONSTRUCTION SIGNS
TCS9–1–1	– TRAFFIC CONTROL STANDARD CONSTRUCTION SIGNS

LICENSED PROFESSIONAL ENGINEER
BENJAMIN M. FLETCHER
PE 24921
OKLAHOMA

8/7/2020

GENERAL CONSTRUCTION NOTES

PROJECT #144628–W, TMUA–W 18–16

MAINTENANCE ZONE 6028–W
TUPELO CREEK DRAINAGE

CITY OF TULSA, OKLAHOMA
ENGINEERING SERVICES DEPARTMENT

PLANS AND ESTIMATES PREPARED BY:
Meshek & Associates, L.L.C.
1437 S. Boulder Avenue, Suite 1550 Tulsa, OK 74119 (918)392–5620

REVISION	BY	DATE

PLAN SCALE	DRAWN	SCB	08/20	APPROVED:
N/A	DESIGNED	BWF	08/20	
	SURVEY	AB	08/18	
PROFILE SCALE	PROJ. MGR.			
HORIZONTAL: N/A	LEAD ENGR.			
	FIELD MGR.			
VERTICAL: N/A	RECOMMENDED DESIGN MANAGER			CITY ENGINEER
FILE:	DRAWING:			DATE:
ATLAS PAGE NO. 235				SHEET 8 OF 161 SHEETS

PRINT DATE: 08/07/2020 M:\City_of_Tulsa\18TUL02_MZ6028_Tupelo_Creek_Drainage\Design\Drawings\18TUL02_QUANTITIES_AND_NOTES.dwg

WATER CONSTRUCTION NOTES (9/24/2018)

1. THE CITY OF TULSA FIELD ENGINEERING DEPARTMENT SHALL INSPECT ALL TRENCHING, BEDDING, PIPE INSTALLATION, BACKFILL AND COMPACTION.
2. ALL CONSTRUCTION AND MATERIALS SHALL BE IN ACCORDANCE WITH CURRENT STANDARD SPECIFICATIONS AND STANDARD DETAILS, CITY OF TULSA ENGINEERING SERVICES DEPARTMENT.
3. EXISTING SERVICE CONNECTIONS ARE TO BE KEPT IN SERVICE UNTIL CONNECTIONS TO NEW MAIN ARE MADE. ALL SERVICE LINE RECONNECTIONS SHALL BE MADE BY THE CONTRACTOR. SERVICE RECONNECTIONS SHALL BE INSTALLED AS PER CITY OF TULSA STANDARD SPECIFICATIONS AND STANDARD DETAILS.
4. MINIMUM COVER OVER WATER LINES SHALL BE AS NOTED ON PLANS.
5. CONTRACTOR SHALL REPLACE EXISTING GRASS WITH SEED/SOD OF SAME TYPE AND VARIETY OR AS NOTED ON PLANS.
6. CONTRACTOR SHALL BORE EXISTING TREES UNDER DRIP LINE, UNLESS DIRECTED OTHERWISE BY ENGINEER.
7. CONTRACTOR SHALL BORE EXISTING DRIVEWAYS, UNLESS DIRECTED OTHERWISE BY ENGINEER.
8. WATER OPERATIONS SHALL OPERATE ALL VALVES ON TRANSMISSION MAINS (16" AND LARGER). CONTRACTOR SHALL OPERATE ALL VALVES ON DISTRIBUTION MAINS (SMALLER THAN 16") WITH THE COORDINATION OF FIELD ENGINEERING AND WATER OPERATIONS AND IN THE PRESENCE OF A FIELD ENGINEERING INSPECTOR.
   A. ATTEMPTS WILL BE MADE WITH ASSISTANCE FROM THE CONTRACTOR TO NOTIFY ALL AFFECTED CUSTOMERS 48-HOURS IN ADVANCE, PARTICULARLY IF COMMERCIAL OR INDUSTRIAL CUSTOMERS ARE INVOLVED. PRIOR TO SHUTDOWN, FIELD ENGINEERING WILL NOTIFY WATER OPERATIONS, AT 918-596-9488, GIVING AN ESTIMATED DOWNTIME. WATER OPERATIONS WILL NOTIFY THE FIRE DEPARTMENT OF ALL FIRE HYDRANTS OUT OF SERVICE AND WHEN THEY ARE BACK IN SERVICE, BY STREET ADDRESS OR INTERSECTION.
   B. WHERE COMMERCIAL, INDUSTRIAL, OR CRITICAL CUSTOMERS ARE AFFECTED, AND FOR ALL LINES 16-INCH AND LARGER IN SIZE, FIELD ENGINEERING WILL REQUEST WATER OPERATIONS TO SHUT DOWN THE MAIN. THERE WILL BE A MINIMUM OF 48-HOUR NOTICE TO WATER OPERATIONS.
9. CONTRACTOR SHALL PROVIDE AT LEAST 48 HOUR NOTICE TO ALL RESIDENTS OR BUSINESSES AFFECTED BEFORE TURNING OFF ANY WATER. CONTRACTOR SHALL BE RESPONSIBLE FOR PLACING DOOR HANGERS ON AFFECTED HOMES AND BUSINESSES.
10. CONTRACTOR SHALL GIVE THE NOTIFICATION CENTER OF THE OKLAHOMA ONE-CALL SYSTEM, INC, NOTICE OF ANY EXCAVATION NO SOONER THAN 48 HOURS OR LATER THAN 10 DAYS, EXCLUDING SATURDAYS, SUNDAYS, LEGAL HOLIDAYS PRIOR TO COMMENCEMENT OF WORK, PHONE 1-800-522-6543.
11. LOCAL AND THROUGH TRAFFIC SHALL BE MAINTAINED THROUGH PROJECT AT ALL TIMES. OPEN CUT STREET CROSSINGS REQUIRE AN APPROVED TRAFFIC CONTROL PLAN WITH TRAFFIC CONTROL DEVICES IN ACCORDANCE WITH CURRENT MUTCD REQUIREMENTS.1
12. ANY DAMAGE CAUSED BY CONTRACTOR TO ADJACENT TRAFFIC SIGNAL INFRASTRUCTURE SHALL BE REPAIRED AT CONTRACTOR'S EXPENSE TO THE SATISFACTION OF THE TRAFFIC ENGINEER.
13. PRIOR TO PAVEMENT SAWING AND EXCAVATION NEAR SIGNALIZED INTERSECTION, CONTRACTOR SHALL CONTACT ENGINEERING SERVICES, TRAFFIC OPERATIONS, 918-596-9766, FOR SITE SPECIFIC, UNDERGROUND TRAFFIC UTILITY LOCATES.
14. CONSTRUCTION FOR ALL ENGINEERING SERVICES FACILITIES SHALL BE IN COMPLIANCE WITH THE LATEST EDITION OF TITLE 252, DEPARTMENT OF ENVIRONMENTAL QUALITY, CHAPTER 626, PUBLIC WATER SUPPLY CONSTRUCTION STANDARDS, OKLAHOMA DEPARTMENT OF ENVIRONMENTAL QUALITY (ODEQ).
15. ALL EXCAVATED MATERIAL NOT REQUIRED IN OTHER AREAS OF THE PROJECT SHALL BECOME THE PROPERTY OF THE CONTRACTOR AND SHALL BE DISPOSED OF BY THE CONTRACTOR IN A MANNER ACCEPTABLE TO THE ENGINEER WITHOUT COST TO THE CITY. THE CONTRACTOR SHALL BE REQUIRED TO OBTAIN AN EARTH CHANGE PERMIT IF ANY EXCESS MATERIAL IS TO BE DISPOSED OF WITHIN THE CITY LIMITS OF TULSA.
16. ANY CHANGES FROM APPROVED PLANS SHALL BE SUBMITTED TO THE CITY OF TULSA FOR WRITTEN APPROVAL PRIOR TO INSTALLATION.

WATERLINE PAY ITEM NOTES (9/24/2018)

1. TESTING AND CHLORINATION OF WATER MAINS SHALL BE PERFORMED BY THE CITY OF TULSA. TESTING, CHLORINATION, AND FLUSHING SHALL BE DONE IN ACCORDANCE WITH SECTION 109.3 OF THE GENERAL SPECIFICATIONS.
   A. CONTRACTOR SHALL FURNISH AND INSTALL TEMPORARY PLUGS WITH ADEQUATE BLOCKING OR RESTRAINTS, PLUS CORPORATION STOPS, AS DIRECTED BY CITY TESTING PERSONNEL, THEN, ONCE TESTING, CHLORINATION AND FLUSHING BY CITY PERSONNEL IS COMPLETED, REMOVE TEMPORARY BLOCKING AND TIE INTO EXISTING SYSTEM, USING FITTINGS SWABBED INTERNALLY WITH 2% BLEACH SOLUTION.
   B. TESTING, CHLORINATION, AND FLUSHING OF NEW WATER MAIN SHALL BE PERFORMED BY CITY PERSONNEL ON MAINS WHICH ARE PHYSICALLY DISCONNECTED FROM THE EXISTING WATER SYSTEM. TESTING, CHLORINATION, AND FLUSHING OF NEW WATER MAINS SHALL NOT BE PERFORMED AGAINST VALVES WHICH ARE PHYSICALLY CONNECTED TO EXISTING SYSTEM.
   C. ALL COSTS FOR TEMPORARY PLUGS, BLOCKING, RESTRAINING, CORPORATION STOPS, TUBING, THREADED CONNECTIONS, BLEACH AND OTHER INCIDENTALS SHALL BE INCLUDED IN THE UNIT PRICE BID FOR PIPE.
2. BURIED BOLTS, HARNESS LUGS, AND COUPLINGS SHALL BE GIVEN TWO COATS OF KOPPER'S BITUMASTIC 300-M (DRY MIL THICKNESS OF 16 MILS) OR EQUAL. COST TO BE INCLUDED IN UNIT PRICE BID FOR PIPE AND FITTINGS.
3. CONTRACTOR TO EXCAVATE ALL UTILITY CROSSINGS AHEAD OF PIPE LAYING SO THAT THE GRADES CAN BE ADJUSTED ON THE PROPOSED WATER MAIN TO AVOID UTILITY CONFLICTS. FAILURE TO DO SO SHALL NOT ENTITLE THE CONTRACTOR TO CLAIM EXTRA COMPENSATION FOR ADJUSTMENTS TO THE PROPOSED WATER MAIN. COST FOR EXCAVATING UTILITY CROSSINGS SHALL BE INCLUDED IN UNIT PRICE BID FOR PIPE.
4. CONTRACTOR SHALL INSURE ALL POLES WHICH ARE AFFECTED BY TRENCHING CONDITIONS ARE BRACED BY OWNERS. PAYMENT SHALL BE INCLUDED IN "RIGHT-OF-WAY CLEARING AND RESTORING". NO ADDITIONAL PAYMENT SHALL BE MADE.
5. ALL HYDRANTS, VALVES AND OTHER FITTINGS FROM ABANDONED WATER MAINS SHALL BE SALVAGED AND DELIVERED TO SOUTH YARD, 2317 S JACKSON. PAYMENT TO BE MADE UNDER RIGHT OF WAY CLEARING AND RESTORING. NO ADDITIONAL PAYMENT SHALL BE MADE.
6. CONTRACTOR SHALL REPAIR ANY IRRIGATION SYSTEMS, ROOF DRAINS, AND FENCING DAMAGED IN THE ZONE OF CONSTRUCTION DURING THE COURSE OF CONSTRUCTION TO SATISFACTION OF THE PROPERTY OWNER. PAYMENT SHALL BE INCLUDED IN RIGHT-OF-WAY CLEARING AND RESTORING. NO ADDITIONAL PAYMENT SHALL BE MADE.
7. COST OF ANY TEMPORARY LIVESTOCK FENCING AND POLES SHALL BE INCLUDED IN COST OF RIGHT OF WAY CLEARING AND RESTORING. NO ADDITIONAL PAYMENT SHALL BE MADE.
8. ALL COSTS FOR COMPONENTS NECESSARY TO RESTRAIN JOINTS FOR PIPE AND FITTINGS DESIGNATED RESTRAINED JOINT ("RJ") SHALL BE INCLUDED IN UNIT PRICE BID FOR PIPE OR FITTINGS.
   A. DUCTILE IRON PIPE RESTRAINED JOINT SYSTEMS: US PIPE TRFLEX, GRIFFIN SNAPLOK, MCWANE THRUSTLOCK, AMERICAN FLEXRING, EBAA MEGALUG, SMITH-BLAIR CAMLOCK, CLOW TUFGRIP OR EQUAL SHALL BE USED ON THIS PROJECT. SHOULD RJ PIPE BE SPECIFIED THROUGH UNCASED BORES, ONLY USPIPE TRFLEX, GRIFFIN SNAPLOK, MCWANE THRUSTLOCK, OR AMERICAN FLEXRING IS TO BE USED. LOCKING GASKETS NOT PERMITTED;
   B. POLYVINYL CHLORIDE (PVC) RESTRAINED JOINT SYSTEMS: EBAA MEGALUG, STAR STARGRIP OR EQUAL SHALL BE USED ON THIS PROJECT. LOCKING GASKETS NOT PERMITTED; SHOULD RJ PIPE BE SPECIFIED ON BORE CASING IS REQUIRED.
   C. HIGH DENSITY POLYETHYLENE (HDPE) RESTRAINED JOINT SYSTEMS: EBAA MEGALUG, STAR STARGRIP OR EQUAL SHALL BE USED ON THIS PROJECT.

   NO ADDITIONAL PAYMENT SHALL BE MADE.
9. ALL CUT ENDS AND WHERE SALVAGED FITTINGS HAVE BEEN REMOVED FROM ABANDONED WATER LINES LEFT IN PLACE, SHALL BE PLUGGED WITH 24-IN OF CONCRETE INSIDE THE PIPE. COST OF CONCRETE PLUGGING TO BE INCLUDED IN UNIT PRICE BID FOR PIPE. NO ADDITIONAL PAYMENT SHALL BE MADE.
10. TRACER WIRE AND DETECTABLE MYLAR MARKING TAPE SHALL BE INSTALLED ABOVE ALL PVC AND HDPE PIPE, TERMINATING ONLY ONTO HYDRANTS JUST ABOVE GROUND LEVEL AS PER CONST SPEC 310. COST OF TRACER WIRE AND DETECTABLE MYLAR TAPE SHALL BE INCLUDED IN UNIT PRICE BID FOR PVC AND HDPE PIPE. CONST SPEC 310.1 NOW ALLOWS #12 COPPER-CLAD STEEL (CCS) WIRE, 21% CONDUCTIVITY, IN LIEU OF #8 COPPER WIRE AS TRACER WIRE ATOP PVC AND HDPE PIPE.
11. DETECTABLE MYLAR MARKING TAPE SHALL BE INSTALLED OVER DUCTILE IRON PIPE AS PER CONST SPEC 307.3 AND 307.4. COST WILL BE INCLUDED IN COST OF DUCTILE IRON PIPE.
12. ALL LABOR, MATERIALS, AND EQUIPMENT TO CONNECT PROPOSED WATER MAINS TO EXISTING WATER MAINS ARE INCLUDED IN COST OF SLEEVES/ADAPTORS. CONTRACTOR TO EXCAVATE ALL EXISTING WATER MAINS AHEAD OF PIPE LAYING SO THAT THE GRADES CAN BE ADJUSTED ACCORDINGLY. FAILURE TO DO SO SHALL NOT ENTITLE THE CONTRACTOR TO CLAIM EXTRA COMPENSATION FOR ADJUSTMENTS TO THE PROPOSED WATER MAIN. COST FOR EXCAVATING EXISTING WATER MAINS SHALL BE INCLUDED IN UNIT PRICE BID FOR SLEEVES. NO ADDITIONAL PAYMENT SHALL BE MADE.
13. AT THE DIRECTION OF THE ENGINEER, THE CONTRACTOR SHALL FURNISH A "LICENSED AND BONDED PLUMBER", WHICH SHALL INCLUDE ALL COSTS OF LABOR, TOOLS, PERMIT FEES, AND EQUIPMENT TO REROUTE THE EXISTING CUSTOMER SERVICE ON CUSTOMER PROPERTY TO THE PROPOSED CUSTOMER METER CAN. COST SHALL NOT EXCEED AN ALLOWANCE OF $1000 PER OCCURRENCE. MATERIALS SHALL BE PAID UNDER SEPARATE BID ITEMS. NO ADDITIONAL PAYMENT SHALL BE MADE.
14. CONTRACTOR IS REMINDED TO BACKFILL ALL TRENCHES EXCAVATED ACROSS ANY EXISTING OR PROPOSED DRIVING OR PARKING SURFACE WITH 1½ -IN TYPE A AGGREGATE BASE, PLACED IN 8-INCH MAXIMUM LIFTS AND COMPACTED TO 98% MODIFIED PROCTOR DENSITY. COST TO BE INCLUDED IN COST OF EXCAVATION AND BACKFILL. NO ADDITIONAL PAYMENT SHALL BE MADE.
15. WATER SERVICE CONNECTIONS SHALL INCLUDE COST OF MATERIAL, LABOR AND EQUIPMENT TO REMOVE AND INSTALL SADDLES, SERVICE CLAMPS, CORPORATION STOPS, BENDS, 3-PART UNIONS, COUPLINGS, SETTERS AND ANY OTHER INCIDENTALS REQUIRED FOR A COMPLETE WATER SERVICE CONNECTION WITH EXCEPTION OF METER CANS, RIMS AND LIDS. NO ADDITIONAL PAYMENT SHALL BE MADE. METER CANS, LIDS AND RIMS SHALL BE PAID AS A SEPARATE BID ITEM.
   A. SHORT SERVICE SHALL BE ANY SERVICE LINE THAT IS 25-FEET OR LESS IN LENGTH. SHORT SERVICES DO NOT INCLUDE PAVEMENT REPLACEMENT. I.E. ¾-INCH WATER SERVICE CONNECTIONS (SHORT SERVICE)
   B. LONG SERVICE SHALL BE ANY SERVICE LINE THAT IS GREATER THAN 25-FEET UP TO 80-FEET IN LENGTH. LONG SERVICES INCLUDE PAVEMENT REPLACEMENT AND/ OR COST TO BORE. EXAMPLE: ¾-IN WATER SERVICE CONNECTIONS (LONG SERVICE)
   C. SHORT AND LONG SERVICE LINES EXCEEDING THE ABOVE PARAMETERS WILL BE COMPENSATED FOR LINEAR FOOTAGE ABOVE AND BEYOND. COMPENSATION SHALL BE PAID AS "SERVICE LINES, EXTENSION", PER LF
16. SERVICE LINES ON NON-ARTERIALS SHALL BE EITHER COPPER TUBING (TYPE K SOFT ANNEALED CONFORMING TO ASTM B 88) OR PEX TUBING (UPONOR AQUA PEX 5206 BLUE CONFORMING TO ASTM F876/F877/F2023). PEX TUBING IS NOT PERMITTED WITHIN ARTERIAL RIGHT OF WAY. WHEN CONTRACTOR ELECTS TO USE PEX TUBING:
   A. ¾-INCH WATER SERVICE CONNECTION SHALL USE 1-INCH PEX TUBING MINIMUM
   B. 1-INCH WATER SERVICE CONNECTION SHALL USE 1¼-INCH PEX TUBING MINIMUM
17. CONTRACTOR'S PLUMBER SHALL PROVIDE AN INFORMATIONAL BROCHURE TO THE PROPERTY OWNERS OUTLINING THE STEPS REQUIRED TO THOROUGHLY FLUSH THEIR WATERLINES AFTER CONNECTION TO THE NEW WATER MAIN. ALL COSTS TO PRODUCE AND DISTRIBUTE THE BROCHURE SHALL BE INCLUDED IN THE PRICE BID FOR THIS ITEM.
18. THE "OWNER ALLOWANCE" CAN BE USED FOR VARIOUS WORK AND MISCELLANEOUS ITEMS NOT IDENTIFIED IN THE CONTRACT DOCUMENTS WITH THE FOLLOWING PROVISIONS: THE ALLOWANCE SHALL BE USED FOR COST OF MATERIALS, LABOR, INSTALLATION AND OVERHEAD AND PROFIT FOR ADDITIONAL WORK AND MISCELLANEOUS ITEMS THAT ARE NOT IDENTIFIED IN THE CONSTRUCTION DOCUMENTS AND PLANS, AND NOT INCLUDED IN THE BID ITEMS OF THE CONTRACT.
   A. THE ALLOWANCE SHALL BE USED ONLY AT THE DISCRETION OF THE CITY. ANY ALLOWANCE BALANCE REMAINING AT THE COMPLETION OF THE PROJECT WILL BE CREDITED BACK TO THE CITY ON THE FINAL APPLICATION FOR PAYMENT SUBMITTED BY THE CONTRACTOR.
   B. THE CONTRACTOR SHALL PROVIDE, TO THE CITY, A WRITTEN REQUEST FOR THE USE OF ANY ALLOWANCE, WITH A SCHEDULE OF VALUES, AND ALL ASSOCIATED BACKUP INFORMATION, INCLUDING ANY TIME EXTENSIONS REQUIRED TO PERFORM THE WORK.
   C. THE CONTRACTOR SHALL PROCEED WITH THE WORK INCLUDED IN THE ALLOWANCE ONLY AFTER RECEIVING A WRITTEN ORDER, FROM THE ENGINEER AND CITY AUTHORIZING SUCH WORK. PROCEEDING WITH WORK IN THE ALLOWANCE WITHOUT A WRITTEN ORDER FROM THE CITY WILL BE AT THE CONTRACTOR'S EXPENSE.
19. WHERE PLANS IDENTIFY A 22.5-DEG OR 11.25-DEG VERTICAL OR HORIZONTAL BEND, HDPE WILL BE DEFLECTED PER MANUFACTURER'S MINIMUM ALLOWABLE BEND RADIUS.
20. WHERE PLANS IDENTIFY A CROSS, HDPE WILL USE TWO (2) TEE'S. NO ADDITIONAL PAYMENT SHALL BE MADE.
21. TOP OF VALVE BOX SHALL BE FLUSH WITH FINISHED GRADE.
22. THE CONTRACTOR SHALL RESTORE ALL DISTURBED AREAS TO A CONDITION EQUAL TO OR BETTER THAN THE EXISTING IMPROVEMENTS. LIMITS OF DISTURBANCE SHALL NOT EXCEED 9-FEET CENTERED ON THE WATERLINE. ANY DISTURBANCE OUTSIDE OF THIS AREA SHALL BE RESTORED AT THE CONTRACTORS EXPENSE. STREETS, DRIVEWAYS AND ASSOCIATED ITEMS SHALL BE PAID FOR UNDER OTHER ITEMS OF WORK.
23. THE CONTRACTOR SHALL RESTORE ALL DISTURBED GRASS AREAS TO A CONDITION EQUAL TO OR BETTER THAN THE EXISTING CONDITION. THE CONTRACTOR SHALL REPLACE THE SOD TO MATCH IN-KIND AND QUALITY. LIMITS OF DISTURBANCE SHALL NOT EXCEED 9-FEET CENTERED ON THE WATERLINE. ANY DISTURBANCE OUTSIDE OF THIS AREA SHALL BE RESTORED AT THE CONTRACTORS EXPENSE.
24. SPOT ELEVATIONS ON THE MAIN WATER LINE RELATIVE TO FINISHED GRADE SHALL BE PROVIDED AT EACH 100-FT INTERVAL, COMPLETE WITH STATION AND OFFSET. IN ADDITION, ALL VALVES, FITTINGS, FIRE HYDRANTS (TOP OF NUT) AND OTHER MAJOR APPURTENANT ITEMS SHALL BE SHOWN WITH THE PROPER DESCRIPTION, STATION, OFFSET AND ELEVATION.
25. SPOT ELEVATIONS ON WATER METER CANS, VAULTS, SHALL BE SHOWN WITH THE PROPER DESCRIPTION (METER TYPE, METER SIZE, METER NUMBER, SERVICE MATERIAL, SERVICE SIZE), STATION, OFFSET AND ELEVATION PER PLAN SURVEY CONTROL DATUM.
26. WORK UNDER THIS ITEM SHALL INCLUDE FURNISHING AND INSTALLING HDPE WALL ANCHOR AS SHOWN ON DRAWINGS OR AS DIRECTED BY THE ENGINEER. THE UNIT PRICE SHALL INCLUDE THE COST OF ALL LABOR, EQUIPMENT AND MATERIALS REQUIRED. NO ADDITIONAL PAYMENT SHALL BE MADE FOR EXCAVATION, BACKFILLING, OR CONCRETE BLOCKING.
27. PRESSURE TESTING AND CHLORINATION OF WATER MAINS SHALL NOT BE PERFORMED UNTIL THE CITY INSPECTOR HAS RECEIVED REQUIRED CONSTRUCTION AS-BUILT RECORDS.

PROJECT #144628-W, TMUA-W 18-16 MAINTENANCE ZONE 6028-W

LICENSED PROFESSIONAL ENGINEER
BENJAMIN W. FLETCHER
24921
OKLAHOMA

8/7/2020

WATERLINE PAY ITEM NOTES

PROJECT #144628-W, TMUA-W 18-16

MAINTENANCE ZONE 6028-W
TUPELO CREEK DRAINAGE

CITY OF TULSA, OKLAHOMA
ENGINEERING SERVICES DEPARTMENT

PLANS AND ESTIMATES PREPARED BY:
Meshek & Associates, L.L.C.
1437 S. Boulder Avenue, Suite 1550 Tulsa, OK 74119 (918)392-5620

REVISION	BY	DATE

PLAN SCALE	DRAWN	SCB	08/20	APPROVED:
N/A	DESIGNED	BWF	08/20	
	SURVEY	AB	08/18	
PROFILE SCALE	PROJ. MGR.			
HORIZONTAL: N/A	LEAD ENGR.			
	FIELD MGR.			
VERTICAL: N/A	RECOMMENDED			
	DESIGN MANAGER			CITY ENGINEER
FILE:	DRAWING:			DATE:
ATLAS PAGE NO. 235				SHEET 9 OF 161 SHEETS

PRINT DATE: 08/07/2020 M:\City_of_Tulsa\18TUL02_WZ6028_Tupelo_Creek_Drainage\Design\Drawings\18TUL02_WL_PAY_ITEMS_AND_NOTES.dwg

PARTICIPATING WATERLINE PAY ITEMS

PARTICIPATING WATERLINE PAY ITEMS					
ITEM NO.	SPEC NO.	ITEM DESCRIPTION	NOTES	UNIT	QUANTITY
96	COT 301	RIGHT-OF-WAY CLEARING AND RESTORING, COMPLETE IN PLACE	4,5,6,7,22	SY	851
97	COT 302	EXCAVATION AND BACKFILL, UNCLASSIFIED	14	CY	597
98	COT 302	TYPE 'A' AGGREGATE BACKFILL	14	CY	171
99	COT 308	20 INCH STEEL CONDUIT CASING		LF	169
100	COT 315	3/4 INCH WATER SERVICE CONNECTION (LONG)	13,15,16,17	EA	5
101	COT 315	3/4 INCH WATER SERVICE CONNECTION (SHORT)	13,15,16,17	EA	5
102	COT 315	3/4 INCH WATER METER SETTER, CAN, LID, RIM	15	EA	10
103	COT 317	6 INCH FIRE HYDRANT EXTENSION		EA	3
104	COT 317	3-WAY FIRE HYDRANT (RJ), COMPLETE IN PLACE		EA	3
105	COT 318	STANDARD VALVE BOX	21	EA	7
106	COT 318	STANDARD VALVE BOX EXTENSION	21	VF	21
107	COT 325	SODDING AND SEEDING	23	SY	559
108	COT 326	STREET WASH DOWN		LF	789
109	COT 327	SIGNS 48" X 48"		SD	90
110	COT 327	TUBE CHANNELIZERS		SD	1009
111	COT 327	TYPE III BARRICADE		SD	100
112	COT 327	FLAGGER		MD	90
113	COT 328	BORE (6" OR 8" WATERLINE)		LF	111
114	COT 329	TEMPORARY AGGREGATE SURFACE		SY	29
115	COT 329	PAVEMENT, REMOVAL AND REPLACEMENT (ASPHALT)		SY	29
116	COT 329	PAVEMENT, REMOVAL AND REPLACEMENT (CURB & GUTTER)		LF	20
117	COT 329	SAWCUT		LF	168
118	COT 330	TEMPORARY SILT FENCE		LF	706
119	SPECIAL	LICENSED AND BONDED PLUMBER	13, 17	EA	10
120	SPECIAL	CONSTRUCTION AS-BUILT	24	EA	1

PARTICIPATING WATERLINE PAY ITEMS - PVC OPTION					
ITEM NO.	SPEC NO.	ITEM DESCRIPTION	NOTES	UNIT	QUANTITY
121	COT 307	6 INCH DIP, CL51 POLYETHYLENE WRAPPED (RJ)	1,2,3,8,9,11,27	LF	59
122	COT 307	8 INCH DIP, CL51 POLYETHYLENE WRAPPED (RJ)	1,2,3,8,9,11,27	LF	274
123	COT 309	6 INCH PVC AWWA C900 CLASS 200 DR-14	1,2,3,9,10,27	LF	284
124	COT 309	6 INCH PVC AWWA C900 CLASS 200 DR-14 (RJ)	1,2,3,8,9,10,27	LF	114
125	COT 309	8 INCH PVC AWWA C900 CLASS 200 DR-14	1,2,3,9,10,27	LF	30
126	COT 309	8 INCH PVC AWWA C900 CLASS 200 DR-14 (RJ)	1,2,3,8,9,10,27	LF	131
127	COT 312	6 INCH DUCTILE IRON 45 DEGREE BEND (RJ)	2,8	EA	12
128	COT 312	8 INCH DUCTILE IRON 45 DEGREE BEND (RJ)	2,8	EA	6
129	COT 312	6 INCH X 6 INCH DUCTILE IRON TEE (RJ)	2,8	EA	3
130	COT 312	8 INCH X 6 INCH DUCTILE IRON TEE (RJ)	2,8	EA	2
131	COT 312	8 INCH DUCTILE IRON PLUG (RJ)	2,8	EA	1
132	COT 317	6 INCH GATE VALVE (RJ)	8,21	EA	5
133	COT 317	8 INCH GATE VALVE (RJ)	8,21	EA	3

PARTICIPATING WATERLINE PAY ITEMS - HDPE OPTION					
ITEM NO.	SPEC NO.	ITEM DESCRIPTION	NOTES	UNIT	QUANTITY
134	COT 307	8 INCH DIP, CL 51 POLYETHYLENE WRAPPED (RJ)	1,2,3,9,11,27	LF	274
135	COT 309A	8 INCH HDPE AWWA C906 PE4710 DR-11 (DIPS)	1,2,3,8,9,10,19,27	LF	559
136	COT 312A	8 INCH HDPE 45 DEGREE BEND (DIPS)		EA	18
137	COT 312A	8 INCH X 8 INCH HDPE TEE (DIPS)	20	EA	5
138	COT 312A	8 INCH HDPE MJ ADAPTOR (DIPS) (RJ)		EA	25
139	COT 312A	8 INCH HDPE WALL ANCHOR (DIPS) (RJ)	26	EA	10
140	COT 312	8 INCH DUCTILE IRON PLUG (RJ)	2,8	EA	1
141	COT 317	8 INCH GATE VALVE (RJ)	8,21	EA	8

PARTICIPATING WATERLINE PAY ITEMS - DIP OPTION					
ITEM NO.	SPEC NO.	ITEM DESCRIPTION	NOTES	UNIT	QUANTITY
142	COT 307	6 INCH DIP, CL51 POLYETHYLENE WRAPPED	1,2,3,9,11,27	LF	321
143	COT 307	6 INCH DIP, CL51 POLYETHYLENE WRAPPED (RJ)	1,2,3,8,9,11,27	LF	294
144	COT 307	8 INCH DIP, CL51 POLYETHYLENE WRAPPED	1,2,3,9,11,27	LF	30
145	COT 307	8 INCH DIP, CL51 POLYETHYLENE WRAPPED (RJ)	1,2,3,8,9,11,27	LF	188
146	COT 312	6 INCH DUCTILE IRON 45 DEGREE BEND (RJ)	2,8	EA	12
147	COT 312	8 INCH DUCTILE IRON 45 DEGREE BEND (RJ)	2,8	EA	6
148	COT 312	6 INCH X 6 INCH DUCTILE IRON TEE (RJ)	2,8	EA	3
149	COT 312	8 INCH X 6 INCH DUCTILE IRON TEE (RJ)	2,8	EA	2
150	COT 312	8 INCH DUCTILE IRON PLUG (RJ)	2,8	EA	1
151	COT 317	6 INCH GATE VALVE (RJ)	8,21	EA	5
152	COT 317	8 INCH GATE VALVE (RJ)	8,21	EA	3

NON-PARTICIPATING WATERLINE PAY ITEMS

NON-PARTICIPATING WATERLINE PAY ITEMS					
ITEM NO.	SPEC NO.	ITEM DESCRIPTION	NOTES	UNIT	QUANTITY
265	COT 301	RIGHT-OF-WAY CLEARING AND RESTORING, COMPLETE IN PLACE	4,5,6,7,22	SY	3092
266	COT 302	EXCAVATION AND BACKFILL, UNCLASSIFIED	14	CY	1296
267	COT 302	TYPE 'A' AGGREGATE BACKFILL	14	CY	208
268	COT 315	3/4 INCH WATER SERVICE CONNECTION (LONG)	13,15,16,17	EA	18
269	COT 315	3/4 INCH WATER SERVICE CONNECTION (SHORT)	13,15,16,17	EA	27
270	COT 315	3/4 INCH WATER METER SETTER, CAN, LID, RIM	15	EA	45
271	COT 315	3/4 INCH BORE UNDER STREET FOR LONG SERVICE		EA	7
272	COT 317	6 INCH FIRE HYDRANT EXTENSION		EA	7
273	COT 317	3-WAY FIRE HYDRANT (RJ), COMPLETE IN PLACE		EA	7
274	COT 318	STANDARD VALVE BOX	21	EA	14
275	COT 318	STANDARD VALVE BOX EXTENSION	21	VF	42
276	COT 325	SODDING AND SEEDING	23	SY	1617
277	COT 326	STREET WASH DOWN		LF	2480
278	COT 327	SIGNS 48" X 48"		SD	250
279	COT 327	TUBE CHANNELIZERS		SD	6420
280	COT 327	TYPE III BARRICADE		SD	380
281	COT 327	FLAGGER		MD	220
282	COT 328	BORE (6" OR 8" WATERLINE)		LF	160
283	COT 329	TEMPORARY AGGREGATE SURFACE		SY	65
284	COT 329	PAVEMENT, REMOVAL AND REPLACEMENT (ASPHALT)		SY	65
285	COT 329	PAVEMENT, REMOVAL AND REPLACEMENT (CURB & GUTTER)		LF	40
286	COT 329	SAWCUT		LF	306
287	COT 330	TEMPORARY SILT FENCE		LF	2484
288	SPECIAL	LICENSED AND BONDED PLUMBER	13, 17	EA	45
289	SPECIAL	CONSTRUCTION AS-BUILT	24	EA	1

NON-PARTICIPATINGWATERLINE PAY ITEMS - PVC OPTION					
ITEM NO.	SPEC NO.	ITEM DESCRIPTION	NOTES	UNIT	QUANTITY
290	COT 309	6 INCH PVC AWWA C900 CLASS 200 DR-14	1,2,3,9,10,27	LF	1271
291	COT 309	6 INCH PVC AWWA C900 CLASS 200 DR-14 (RJ)	1,2,3,8,9,10,27	LF	407
292	COT 309	8 INCH PVC AWWA C900 CLASS 200 DR-14	1,2,3,9,10,27	LF	317
293	COT 309	8 INCH PVC AWWA C900 CLASS 200 DR-14 (RJ)	1,2,3,8,9,10,27	LF	650
294	COT 312	6 INCH DUCTILE IRON 11-1/4 DEGREE BEND (RJ)	2,8	EA	6
295	COT 312	8 INCH DUCTILE IRON 11-1/4 DEGREE BEND (RJ)	2,8	EA	3
296	COT 312	6 INCH DUCTILE IRON 22-1/2 DEGREE BEND (RJ)	2,8	EA	8
297	COT 312	8 INCH DUCTILE IRON 22-1/2 DEGREE BEND (RJ)	2,8	EA	11
298	COT 312	6 INCH DUCTILE IRON 45 DEGREE BEND (RJ)	2,8	EA	8
299	COT 312	8 INCH DUCTILE IRON 45 DEGREE BEND (RJ)	2,8	EA	16
300	COT 312	6 INCH X 6 INCH DUCTILE IRON TEE (RJ)	2,8	EA	6
301	COT 312	8 INCH X 6 INCH DUCTILE IRON TEE (RJ)	2,8	EA	5
302	COT 312	6 INCH DUCTILE IRON SLEEVE (RJ)	2,8,12	EA	2
303	COT 312	8 INCH DUCTILE IRON SLEEVE (RJ)	2,8,12	EA	1
304	COT 312	6 INCH DUCTILE IRON PLUG (RJ)	2,8	EA	4
305	COT 312	8 INCH DUCTILE IRON PLUG (RJ)	2,8	EA	1
306	COT 317	6 INCH GATE VALVE (RJ)	8,21	EA	10
307	COT 317	8 INCH GATE VALVE (RJ)	8,21	EA	5

NON-PARTICIPATING WATERLINE PAY ITEMS - HDPE OPTION					
ITEM NO.	SPEC NO.	ITEM DESCRIPTION	NOTES	UNIT	QUANTITY
308	COT 307	8 INCH DIP, CL 51 POLYETHYLENE WRAPPED (RJ)	1,2,3,9,11,27	LF	15
309	COT 309A	8 INCH HDPE AWWA C906 PE4710 DR-11 (DIPS)	1,2,3,8,9,10,19,27	LF	2630
310	COT 312A	8 INCH HDPE 45 DEGREE BEND (DIPS)		EA	24
311	COT 312A	8 INCH X 8 INCH HDPE TEE (DIPS)	20	EA	11
312	COT 312A	8 INCH HDPE SLEEVE (DIPS)		EA	3
313	COT 312A	8 INCH HDPE MJ ADAPTOR (DIPS) (RJ)		EA	32
314	COT 312A	8 INCH HDPE WALL ANCHOR (DIPS) (RJ)	26	EA	23
315	COT 312	6 INCH DUCTILE IRON PLUG (RJ)	2,8	EA	4
316	COT 312	8 INCH DUCTILE IRON PLUG (RJ)	2,8	EA	1
317	COT 317	8 INCH GATE VALVE (RJ)	8,21	EA	15

NON-PARTICIPATING WATERLINE PAY ITEMS - DIP OPTION					
ITEM NO.	SPEC NO.	ITEM DESCRIPTION	NOTES	UNIT	QUANTITY
318	COT 307	6 INCH DIP, CL51 POLYETHYLENE WRAPPED	1,2,3,9,11,27	LF	1308
319	COT 307	6 INCH DIP, CL51 POLYETHYLENE WRAPPED (RJ)	1,2,3,8,9,11,27	LF	370
320	COT 307	8 INCH DIP, CL51 POLYETHYLENE WRAPPED	1,2,3,9,11,27	LF	411
321	COT 307	8 INCH DIP, CL51 POLYETHYLENE WRAPPED (RJ)	1,2,3,8,9,11,27	LF	556
322	COT 312	6 INCH DUCTILE IRON 11-1/4 DEGREE BEND (RJ)	2,8	EA	6
323	COT 312	8 INCH DUCTILE IRON 11-1/4 DEGREE BEND (RJ)	2,8	EA	3
324	COT 312	6 INCH DUCTILE IRON 22-1/2 DEGREE BEND (RJ)	2,8	EA	8
325	COT 312	8 INCH DUCTILE IRON 22-1/2 DEGREE BEND (RJ)	2,8	EA	11
326	COT 312	6 INCH DUCTILE IRON 45 DEGREE BEND (RJ)	2,8	EA	8
327	COT 312	8 INCH DUCTILE IRON 45 DEGREE BEND (RJ)	2,8	EA	16
328	COT 312	6 INCH X 6 INCH DUCTILE IRON TEE (RJ)	2,8	EA	6
329	COT 312	8 INCH X 6 INCH DUCTILE IRON TEE (RJ)	2,8	EA	5
330	COT 312	6 INCH DUCTILE IRON SLEEVE (RJ)	2,8,12	EA	2
331	COT 312	8 INCH DUCTILE IRON SLEEVE (RJ)	2,8,12	EA	1
332	COT 312	6 INCH DUCTILE IRON PLUG (RJ)	2,8	EA	4
333	COT 312	8 INCH DUCTILE IRON PLUG (RJ)	2,8	EA	1
334	COT 317	6 INCH GATE VALVE (RJ)	8,21	EA	10
335	COT 317	8 INCH GATE VALVE (RJ)	8,21	EA	5

PROJECT #144628-W, TMUA-W 18-16 MAINTENANCE ZONE 6028-W, TUPELO CREEK DRAINAGE

LICENSED PROFESSIONAL ENGINEER
BENJAMIN R. FLETCHER
24921
OKLAHOMA

8/7/2020

WATERLINE PAY ITEMS

PROJECT #144628-W, TMUA-W 18-16

MAINTENANCE ZONE 6028-W
TUPELO CREEK DRAINAGE

CITY OF TULSA, OKLAHOMA
ENGINEERING SERVICES DEPARTMENT

PLANS AND ESTIMATES PREPARED BY:
Meshek & Associates, L.L.C.
1437 S. Boulder Avenue, Suite 1550 Tulsa, OK 74119 (918)392-5620

REVISION	BY	DATE

PLAN SCALE: N/A	DRAWN	SCB	08/20
	DESIGNED	BWF	08/20
	SURVEY	AB	08/18
PROFILE SCALE: HORIZONTAL: N/A	PROJ. MGR.		
	LEAD ENGR.		
	FIELD MGR.		
VERTICAL: N/A	RECOMMENDED		
	DESIGN MANAGER		
FILE:	DRAWING:		
ATLAS PAGE NO. 235			

APPROVED:

CITY ENGINEER

DATE:

SHEET 10 OF 161 SHEETS

PRINT DATE: 08/07/2020 M:\City_of_Tulsa\18TUL02_MZ6028_Tupelo_Creek_Drainage\Design\Drawings\18TUL02_WL_PAY_ITEMS_AND_NOTES.dwg

PARTICIPATING WATERLINE PAY ITEMS

PARTICIPATING WATERLINE SUMMARY SCHEDULE - BASE BID LINE-1

ITEM NO.	SPEC NO.	ITEM DESCRIPTION	NOTES	UNIT	QUANTITY
96	COT 301	RIGHT-OF-WAY CLEARING AND RESTORING, COMPLETE IN PLACE	4,5,6,7,22	SY	201
97	COT 302	EXCAVATION AND BACKFILL, UNCLASSIFIED	14	CY	140
98	COT 302	TYPE 'A' AGGREGATE BACKFILL	14	CY	69
99	COT 308	20 INCH STEEL CONDUIT CASING		LF	34
100	COT 315	3/4 INCH WATER SERVICE CONNECTION (LONG)	13,15,16,17	EA	1
101	COT 315	3/4 INCH WATER SERVICE CONNECTION (SHORT)	13,15,16,17	EA	1
102	COT 315	3/4 INCH WATER METER SETTER, CAN, LID, RIM	15	EA	2
105	COT 318	STANDARD VALVE BOX	21	EA	3
106	COT 318	STANDARD VALVE BOX EXTENSION	21	VF	9
107	COT 325	SODDING AND SEEDING	23	SY	201
108	COT 326	STREET WASH DOWN		LF	213
109	COT 327	SIGNS 48" X 48"		SD	10
110	COT 327	TUBE CHANNELIZERS		SD	103
111	COT 327	TYPE III BARRICADE		SD	20
112	COT 327	FLAGGER		MD	10
114	COT 329	TEMPORARY AGGREGATE SURFACE		SY	16
115	COT 329	PAVEMENT, REMOVAL AND REPLACEMENT (ASPHALT)		SY	16
116	COT 329	PAVEMENT, REMOVAL AND REPLACEMENT (CURB & GUTTER)		LF	10
117	COT 329	SAWCUT		LF	80
118	COT 330	TEMPORARY SILT FENCE		LF	170
119	SPECIAL	LICENSED AND BONDED PLUMBER	13,17	EA	2

PARTICIPATING WATERLINE SUMMARY SCHEDULE - PVC OPTION - LINE-1

ITEM NO.	SPEC NO.	ITEM DESCRIPTION	NOTES	UNIT	QUANTITY
122	COT 307	8 INCH DIP, CL 51 POLYETHYLENE WRAPPED (RJ)	1,2,3,9,11,27	LF	57
125	COT 309	8 INCH PVC AWWA C900 CLASS 200 DR-14	1,2,3,9,10,27	LF	30
126	COT 309	8 INCH PVC AWWA C900 CLASS 200 DR-14 (RJ)	1,2,3,8,9,10,27	LF	131
128	COT 312	8 INCH DUCTILE IRON 45 DEGREE BEND (RJ)	2,8	EA	6
130	COT 312	8 INCH X 6 INCH DUCTILE IRON TEE (RJ)	2,8	EA	2
131	COT 312	8 INCH DUCTILE IRON PLUG (RJ)	2,8	EA	1
133	COT 317	8 INCH GATE VALVE (RJ)	8,21	EA	3

PARTICIPATING WATERLINE PAY ITEMS - HDPE OPTION - LINE-1

ITEM NO.	SPEC NO.	ITEM DESCRIPTION	NOTES	UNIT	QUANTITY
134	COT 307	8 INCH DIP, CL 51 POLYETHYLENE WRAPPED	1,2,3,9,11,27	LF	57
135	COT 309A	8 INCH HDPE AWWA C906 PE4710 DR-11 (DIPS)	1,2,3,8,9,10,19,27	LF	161
136	COT 312A	8 INCH HDPE 45 DEGREE BEND (DIPS)		EA	6
137	COT 312A	8 INCH X 8 INCH HDPE TEE (DIPS)	20	EA	2
138	COT 312A	8 INCH HDPE MJ ADAPTOR (DIPS) (RJ)		EA	11
139	COT 312A	8 INCH HDPE WALL ANCHOR (DIPS) (RJ)	26	EA	2
140	COT 312	8 INCH DUCTILE IRON PLUG (RJ)	2,8	EA	1
141	COT 317	8 INCH GATE VALVE (RJ)	8,21	EA	3

PARTICIPATING WATERLINE PAY ITEMS - DIP OPTION - LINE-1

ITEM NO.	SPEC NO.	ITEM DESCRIPTION	NOTES	UNIT	QUANTITY
144	COT 307	8 INCH DIP, CL51 POLYETHYLENE WRAPPED	1,2,3,9,11,27	LF	30
145	COT 307	8 INCH DIP, CL51 POLYETHYLENE WRAPPED (RJ)	1,2,3,8,9,11,27	LF	188
147	COT 312	8 INCH DUCTILE IRON 45 DEGREE BEND (RJ)	2,8	EA	6
149	COT 312	8 INCH X 6 INCH DUCTILE IRON TEE (RJ)	2,8	EA	2
150	COT 312	8 INCH DUCTILE IRON PLUG (RJ)	2,8	EA	1
152	COT 317	8 INCH GATE VALVE (RJ)	8,21	EA	3

PARTICIPATING WATERLINE SUMMARY SCHEDULE - BASE BID - LINE-2

ITEM NO.	SPEC NO.	ITEM DESCRIPTION	NOTES	UNIT	QUANTITY
96	COT 301	RIGHT-OF-WAY CLEARING AND RESTORING, COMPLETE IN PLACE	4,5,6,7,22	SY	46
97	COT 302	EXCAVATION AND BACKFILL, UNCLASSIFIED	14	CY	72
98	COT 302	TYPE 'A' AGGREGATE BACKFILL	14	CY	72
99	COT 308	20 INCH STEEL CONDUIT CASING		LF	34
101	COT 315	3/4 INCH WATER SERVICE CONNECTION (SHORT)	13,15,16,17	EA	1
102	COT 315	3/4 INCH WATER METER SETTER, CAN, LID, RIM		EA	1
103	COT 317	6 INCH FIRE HYDRANT EXTENSION		EA	1
104	COT 317	3-WAY FIRE HYDRANT (RJ), COMPLETE IN PLACE		EA	1
105	COT 318	STANDARD VALVE BOX	21	EA	2
106	COT 318	STANDARD VALVE BOX EXTENSION	21	VF	6
107	COT 325	SODDING AND SEEDING	23	SY	25
108	COT 326	STREET WASH DOWN		LF	77
109	COT 327	SIGNS 48" X 48"		SD	20
110	COT 327	TUBE CHANNELIZERS		SD	96
111	COT 327	TYPE III BARRICADE		SD	20
112	COT 327	FLAGGER		MD	20
114	COT 329	TEMPORARY AGGREGATE SURFACE		SY	13
115	COT 329	PAVEMENT, REMOVAL AND REPLACEMENT (ASPHALT)		SY	13
116	COT 329	PAVEMENT, REMOVAL AND REPLACEMENT (CURB & GUTTER)		LF	10
117	COT 329	SAWCUT		LF	88
118	COT 330	TEMPORARY SILT FENCE		LF	37
119	SPECIAL	LICENSED AND BONDED PLUMBER	13, 17	EA	1

PARTICIPATING WATERLINE SUMMARY SCHEDULE - PVC OPTION - LINE-2

ITEM NO.	SPEC NO.	ITEM DESCRIPTION	NOTES	UNIT	QUANTITY
121	COT 307	6 INCH DIP, CL 51 POLYETHYLENE WRAPPED (RJ)	1,2,3,9,11,27	LF	59
124	COT 309	6 INCH PVC AWWA C900 CLASS 200 DR-14 (RJ)	1,2,3,8,9,10,27	LF	27
127	COT 312	6 INCH DUCTILE IRON 45 DEGREE BEND (RJ)	2,8	EA	4
129	COT 312	6 INCH X 6 INCH DUCTILE IRON TEE (RJ)	2,8	EA	1
132	COT 317	6 INCH GATE VALVE (RJ)	8,21	EA	2

PARTICIPATING WATERLINE SUMMARY SCHEDULE - HDPE OPTION - LINE-2

ITEM NO.	SPEC NO.	ITEM DESCRIPTION	NOTES	UNIT	QUANTITY
134	COT 307	8 INCH DIP, CL 51 POLYETHYLENE WRAPPED	1,2,3,9,11,27	LF	59
135	COT 309A	8 INCH HDPE AWWA C906 PE4710 DR-11 (DIPS)	1,2,3,8,9,10,19,27	LF	27
136	COT 312A	8 INCH HDPE 45 DEGREE BEND (DIPS)		EA	4
137	COT 312A	8 INCH X 8 INCH HDPE TEE (DIPS)	20	EA	1
138	COT 312A	8 INCH HDPE MJ ADAPTOR (DIPS) (RJ)		EA	6
139	COT 312A	8 INCH HDPE WALL ANCHOR (DIPS) (RJ)	26	EA	3
141	COT 317	8 INCH GATE VALVE (RJ)	8,21	EA	2

PARTICIPATING WATERLINE SUMMARY SCHEDULE - DIP OPTION - LINE-2

ITEM NO.	SPEC NO.	ITEM DESCRIPTION	NOTES	UNIT	QUANTITY
143	COT 307	6 INCH DIP, CL51 POLYETHYLENE WRAPPED (RJ)	1,2,3,8,9,11,27	LF	86
146	COT 312	6 INCH DUCTILE IRON 45 DEGREE BEND (RJ)	2,8	EA	4
148	COT 312	6 INCH X 6 INCH DUCTILE IRON TEE (RJ)	2,8	EA	1
151	COT 317	6 INCH GATE VALVE (RJ)	8,21	EA	2

PARTICIPATING WATERLINE PAY ITEMS - LINE-4

ITEM NO.	SPEC NO.	ITEM DESCRIPTION	NOTES	UNIT	QUANTITY
96	COT 301	RIGHT-OF-WAY CLEARING AND RESTORING, COMPLETE IN PLACE	4,5,6,7,22	SY	604
97	COT 302	EXCAVATION AND BACKFILL, UNCLASSIFIED	14	CY	385
98	COT 302	TYPE 'A' AGGREGATE BACKFILL	14	CY	30
99	COT 308	20" STEEL CONDUIT CASING		LF	101
100	COT 315	3/4 INCH WATER SERVICE CONNECTION (LONG)	13,15,16,17	EA	4
101	COT 315	3/4 INCH WATER SERVICE CONNECTION (SHORT)	13,15,16,17	EA	3
102	COT 315	3/4 INCH WATER METER SETTER, CAN, LID, RIM	13,15,16,17	EA	7
103	COT 317	6 INCH FIRE HYDRANT EXTENSION	13,17,16,17	EA	2
104	COT 317	3-WAY FIRE HYDRANT, (RJ) (COMPLETE IN PLACE)	13,17,16,17	EA	2
105	COT 318	STANDARD VALVE BOX	21	EA	2
106	COT 318	STANDARD VALVE BOX EXTENSION	21	VF	6
107	COT 325	SODDING AND SEEDING	23	SY	333
108	COT 326	STREET WASH DOWN	13,26,16,17	LF	499
109	COT 327	SIGNS 48" X 48"	13,27,16,17	SD	60
110	COT 327	TUBE CHANNELIZERS	13,27,16,17	SD	810
111	COT 327	TYPE III BARRICADE	13,27,16,17	SD	60
112	COT 327	FLAGGER	13,27,16,17	MD	60
113	COT 328	BORE (6" OR 8" WATERLINE)		LF	111
118	COT 330	TEMPORARY SILT FENCE	13,30,16,17	LF	499
119	SPECIAL	LICENSED AND BONDED PLUMBER	13, 17	EA	7

PARTICIPATING WATERLINE PAY ITEMS - PVC OPTION - LINE-4

ITEM NO.	SPEC NO.	ITEM DESCRIPTION	NOTES	UNIT	QUANTITY
121	COT 307	6 INCH DIP, CL 51 POLYETHYLENE WRAPPED (RJ)	1,2,3,9,11,27	LF	158
123	COT 309	6 INCH PVC AWWA C900 CLASS 200 DR-14	1,2,3,9,10,27	LF	284
124	COT 309	6 INCH PVC AWWA C900 CLASS 200 DR-14 (RJ)	1,2,3,8,9,10,27	LF	87
127	COT 312	6 INCH DUCTILE IRON 45 DEGREE BEND (RJ)	2,8	EA	8
129	COT 312	6 INCH X 6 INCH DUCTILE IRON TEE (RJ)	2,8	EA	2
132	COT 317	6 INCH GATE VALVE (RJ)	8,21	EA	3

PARTICIPATING WATERLINE PAY ITEMS - HDPE OPTION - LINE-4

ITEM NO.	SPEC NO.	ITEM DESCRIPTION	NOTES	UNIT	QUANTITY
134	COT 307	8 INCH DIP, CL 51 POLYETHYLENE WRAPPED (RJ)	1,2,3,9,11,27	LF	158
135	COT 309A	8 INCH HDPE AWWA C906 PE4710 DR-11 (DIPS)	1,2,3,8,9,10,19,27	LF	371
136	COT 312A	8 INCH HDPE 45 DEGREE BEND (DIPS)		EA	8
137	COT 312A	8 INCH X 8 INCH HDPE TEE (DIPS)	20	EA	2
138	COT 312A	8 INCH HDPE MJ ADAPTOR (DIPS) (RJ)		EA	8
139	COT 312A	8 INCH HDPE WALL ANCHOR (DIPS) (RJ)	26	EA	5
141	COT 317	8 INCH GATE VALVE (RJ)	8,21	EA	3

PARTICIPATING WATERLINE PAY ITEMS - DIP OPTION - LINE-4

ITEM NO.	SPEC NO.	ITEM DESCRIPTION	NOTES	UNIT	QUANTITY
142	COT 307	6 INCH DIP, CL51 POLYETHYLENE WRAPPED	1,2,3,9,11,27	LF	321
143	COT 307	6 INCH DIP, CL51 POLYETHYLENE WRAPPED (RJ)	1,2,3,8,9,11,27	LF	208
146	COT 312	6 INCH DUCTILE IRON 45 DEGREE BEND (RJ)	2,8	EA	8
148	COT 312	6 INCH X 6 INCH DUCTILE IRON TEE (RJ)	2,8	EA	2
151	COT 317	6 INCH GATE VALVE (RJ)	8,21	EA	3

PROJECT #144628-W, TMUA-W 18-16 MAINTENANCE ZONE 6028-W

PRINT DATE: 08/07/2020 M:\City_of_Tulsa\18TUL02_MZ6028_Tupelo_Creek_Drainage\Design\Drawings\18TUL02_WL_PAY_ITEMS_AND_NOTES.dwg

RELEASED PROFESSIONAL ENGINEER BENJAMIN M. FLETCHER 24921 OKLAHOMA

8/7/2020

WATERLINE SUMMARY SCHEDULES

PROJECT #144628-W, TMUA-W 18-16

MAINTENANCE ZONE 6028-W
TUPELO CREEK DRAINAGE

CITY OF TULSA, OKLAHOMA
ENGINEERING SERVICES DEPARTMENT

PLANS AND ESTIMATES PREPARED BY:
Meshek & Associates, L.L.C.
1437 S. Boulder Avenue, Suite 1550 Tulsa, OK 74119 (918)392-5620

REVISION	BY	DATE

PLAN SCALE: N/A
PROFILE SCALE: HORIZONTAL: N/A VERTICAL: N/A

DRAWN	SCB	08/20	APPROVED:
DESIGNED	BWF	08/20	
SURVEY	AB	08/18	
PROJ. MGR.			
LEAD ENGR.			
FIELD MGR.			
RECOMMENDED DESIGN MANAGER			CITY ENGINEER
FILE: DRAWING:			DATE:
ATLAS PAGE NO. 235			SHEET 11 OF 161 SHEETS

NON-PARTICIPATING WATERLINE PAY ITEMS

NON-PARTICIPATING WATERLINE SUMMARY SCHEDULE - BASE BID - LINE - 1

ITEM NO.	SPEC NO.	ITEM DESCRIPTION	NOTES	UNIT	QUANTITY
264	COT 301	RIGHT-OF-WAY CLEARING AND RESTORING, COMPLETE IN PLACE	4,5,6,7,22	SY	548
265	COT 302	EXCAVATION AND BACKFILL, UNCLASSIFIED	14	CY	199
266	COT 302	TYPE 'A' AGGREGATE BACKFILL	14	CY	35
267	COT 315	3/4 INCH WATER SERVICE CONNECTION (LONG)	13,15,16,17	EA	2
268	COT 315	3/4 INCH WATER SERVICE CONNECTION (SHORT)	13,15,16,17	EA	3
269	COT 315	3/4 INCH WATER METER SETTER, CAN, LID, RIM	15	EA	5
271	COT 317	6 INCH FIRE HYDRANT EXTENSION		EA	2
272	COT 317	3-WAY FIRE HYDRANT, (RJ) (COMPLETE IN PLACE)		EA	2
273	COT 318	STANDARD VALVE BOX	21	EA	3
274	COT 318	STANDARD VALVE BOX EXTENSION	21	VF	9
275	COT 325	SODDING AND SEEDING	23	SY	270
276	COT 326	STREET WASH DOWN		LF	448
277	COT 327	SIGNS 48" X 48"		SD	40
278	COT 327	TUBE CHANNELIZERS		SD	560
279	COT 327	TYPE III BARRICADE		SD	40
280	COT 327	FLAGGER		MD	40
282	COT 329	TEMPORARY AGGREGATE SURFACE		SY	16
283	COT 329	PAVEMENT, REMOVAL AND REPLACEMENT (ASPHALT)		SY	16
284	COT 329	PAVEMENT, REMOVAL AND REPLACEMENT (CURB & GUTTER)		LF	10
285	COT 329	SAWCUT		LF	88
286	COT 330	TEMPORARY SILT FENCE		LF	404
287	SPECIAL	LICENSED AND BONDED PLUMBER	13, 17	EA	5

NON-PARTICIPATING WATERLINE SUMMARY SCHEDULE - PVC OPTION - LINE - 1

ITEM NO.	SPEC NO.	ITEM DESCRIPTION	NOTES	UNIT	QUANTITY
291	COT 309	8 INCH PVC AWWA C900 CLASS 200 DR-14	1,2,3,9,10,27	LF	203
292	COT 309	8 INCH PVC AWWA C900 CLASS 200 DR-14 (RJ)	1,2,3,8,9,10,27	LF	180
294	COT 312	8 INCH DUCTILE IRON 11-1/4 DEGREE BEND (RJ)	2,8	EA	2
298	COT 312	8 INCH DUCTILE IRON 45 DEGREE BEND (RJ)	2,8	EA	4
300	COT 312	8 INCH X 6 INCH DUCTILE IRON TEE (RJ)	2,8	EA	4
302	COT 312	8 INCH DUCTILE IRON SLEEVE (RJ)	2,8,12	EA	1
304	COT 312	8 INCH DUCTILE IRON PLUG (RJ)	2,8	EA	1
306	COT 317	8 INCH GATE VALVE (RJ)	8,21	EA	4

NON-PARTICIPATING WATERLINE SUMMARY SCHEDULE - HDPE OPTION - LINE -1

ITEM NO.	SPEC NO.	ITEM DESCRIPTION	NOTES	UNIT	QUANTITY
308	COT 309A	8 INCH HDPE AWWA C906 PE4710 DR-11 (DIPS)	1,2,3,8,9,10,19,27	LF	383
309	COT 312A	8 INCH HDPE 45 DEGREE BEND (DIPS)		EA	4
310	COT 312A	8 INCH X 8 INCH HDPE TEE (DIPS)	20	EA	4
311	COT 312A	8 INCH HDPE SLEEVE (DIPS)		EA	1
312	COT 312A	8 INCH HDPE MJ ADAPTOR (DIPS) (RJ)		EA	10
313	COT 312A	8 INCH HDPE WALL ANCHOR (DIPS) (RJ)	26	EA	3
315	COT 312	8 INCH DUCTILE IRON PLUG (RJ)	2,8	EA	1
316	COT 317	8 INCH GATE VALVE (RJ)	8,21	EA	4

NON-PARTICIPATING WATERLINE PAY ITEMS - DIP OPTION - LINE-1

ITEM NO.	SPEC NO.	ITEM DESCRIPTION	NOTES	UNIT	QUANTITY
319	COT 307	8 INCH DIP, CL51 POLYETHYLENE WRAPPED	1,2,3,9,11,27	LF	241
320	COT 307	8 INCH DIP, CL51 POLYETHYLENE WRAPPED (RJ)	1,2,3,8,9,11,27	LF	142
322	COT 312	8 INCH DUCTILE IRON 11-1/4 DEGREE BEND (RJ)	2,8	EA	2
326	COT 312	8 INCH DUCTILE IRON 45 DEGREE BEND (RJ)	2,8	EA	4
328	COT 312	8 INCH X 6 INCH DUCTILE IRON TEE (RJ)	2,8	EA	4
330	COT 312	8 INCH DUCTILE IRON SLEEVE (RJ)	2,8,12	EA	1
332	COT 312	8 INCH DUCTILE IRON PLUG (RJ)	2,8	EA	1
334	COT 317	8 INCH GATE VALVE (RJ)	8,21	EA	4

NON-PARTICIPATING WATERLINE SUMMARY SCHEDULE - BASE BID - LINE - 2

ITEM NO.	SPEC NO.	ITEM DESCRIPTION	NOTES	UNIT	QUANTITY
265	COT 301	RIGHT-OF-WAY CLEARING AND RESTORING, COMPLETE IN PLACE	4,5,6,7,22	SY	647
266	COT 302	EXCAVATION AND BACKFILL, UNCLASSIFIED	14	CY	232
267	COT 302	TYPE 'A' AGGREGATE BACKFILL	14	CY	30
268	COT 315	3/4 INCH WATER SERVICE CONNECTION (LONG)	13,15,16,17	EA	5
269	COT 315	3/4 INCH WATER SERVICE CONNECTION (SHORT)	13,15,16,17	EA	4
270	COT 315	3/4 INCH WATER METER SETTER, CAN, LID, RIM		EA	9
271	COT 315	3/4 INCH BORE UNDER STREET FOR LONG SERVICE		EA	5
272	COT 317	6 INCH FIRE HYDRANT EXTENSION		EA	2
273	COT 317	3-WAY FIRE HYDRANT (RJ), COMPLETE IN PLACE		EA	2
274	COT 318	STANDARD VALVE BOX	21	EA	1
275	COT 318	STANDARD VALVE BOX EXTENSION	21	VF	3
276	COT 325	SODDING AND SEEDING	23	SY	353
277	COT 326	STREET WASH DOWN		LF	529
278	COT 327	SIGNS 48" X 48"		SD	80
279	COT 327	TUBE CHANNELIZERS		SD	720
280	COT 327	TYPE III BARRICADE		SD	80
281	COT 327	FLAGGER		MD	40
287	COT 330	TEMPORARY SILT FENCE		LF	529
288	SPECIAL	LICENSED AND BONDED PLUMBER	13, 17	EA	9

NON-PARTICIPATING WATERLINE SUMMARY SCHEDULE - PVC OPTION - LINE - 2

ITEM NO.	SPEC NO.	ITEM DESCRIPTION	NOTES	UNIT	QUANTITY
290	COT 309	6 INCH PVC AWWA C900 CLASS 200 DR-14	1,2,3,9,10,27	LF	436
291	COT 309	6 INCH PVC AWWA C900 CLASS 200 DR-14 (RJ)	1,2,3,8,9,10,27	LF	86
294	COT 312	6 INCH DUCTILE IRON 11-1/4 DEGREE BEND (RJ)	2,8	EA	5
300	COT 312	6 INCH X 6 INCH DUCTILE IRON TEE (RJ)	2,8	EA	3
302	COT 312	6 INCH DUCTILE IRON SLEEVE (RJ)	2,8,12	EA	2
304	COT 312	6 INCH DUCTILE IRON PLUG (RJ)	2,8	EA	2
306	COT 317	6 INCH GATE VALVE (RJ)	8,21	EA	1

NON-PARTICIPATING WATERLINE SUMMARY SCHEDULE - HDPE OPTION - LINE -2

ITEM NO.	SPEC NO.	ITEM DESCRIPTION	NOTES	UNIT	QUANTITY
309	COT 309A	8 INCH HDPE AWWA C906 PE4710 DR-11 (DIPS)	1,2,3,8,9,10,19,27	LF	522
311	COT 312A	8 INCH X 8 INCH HDPE TEE (DIPS)	20	EA	3
312	COT 312A	8 INCH HDPE SLEEVE (DIPS)		EA	2
313	COT 312A	8 INCH HDPE MJ ADAPTOR (DIPS) (RJ)		EA	4
314	COT 312A	8 INCH HDPE WALL ANCHOR (DIPS) (RJ)	26	EA	5
315	COT 312	6 INCH DUCTILE IRON PLUG (RJ)	2,8	EA	2
317	COT 317	8 INCH GATE VALVE (RJ)	8,21	EA	1

NON-PARTICIPATING WATERLINE SUMMARY SCHEDULE - DIP OPTION LINE-2

ITEM NO.	SPEC NO.	ITEM DESCRIPTION	NOTES	UNIT	QUANTITY
318	COT 307	6 INCH DIP, CL51 POLYETHYLENE WRAPPED	1,2,3,9,11,27	LF	447
319	COT 307	6 INCH DIP, CL51 POLYETHYLENE WRAPPED (RJ)	1,2,3,8,9,11,27	LF	75
322	COT 312	6 INCH DUCTILE IRON 11-1/4 DEGREE BEND (RJ)	2,8	EA	5
328	COT 312	6 INCH X 6 INCH DUCTILE IRON TEE (RJ)	2,8	EA	3
330	COT 312	6 INCH DUCTILE IRON SLEEVE (RJ)	2,8,12	EA	2
332	COT 312	6 INCH DUCTILE IRON PLUG (RJ)	2,8	EA	2
334	COT 317	6 INCH GATE VALVE (RJ)	8,21	EA	1

NON-PARTICIPATING WATERLINE SUMMARY SCHEDULE - BASE BID - LINE - 3

ITEM NO.	SPEC NO.	ITEM DESCRIPTION	NOTES	UNIT	QUANTITY
265	COT 301	RIGHT-OF-WAY CLEARING AND RESTORING, COMPLETE IN PLACE	4,5,6,7,22	SY	580
266	COT 302	EXCAVATION AND BACKFILL, UNCLASSIFIED	14	CY	263
267	COT 302	TYPE 'A' AGGREGATE BACKFILL	14	CY	42
269	COT 315	3/4 INCH WATER SERVICE CONNECTION (SHORT)	13,15,16,17	EA	6
270	COT 315	3/4 INCH WATER METER SETTER, CAN, LID, RIM	15	EA	6
272	COT 317	6 INCH FIRE HYDRANT EXTENSION		EA	1
273	COT 317	3-WAY FIRE HYDRANT, (RJ) (COMPLETE IN PLACE)		EA	1
274	COT 318	STANDARD VALVE BOX	21	EA	2
275	COT 318	STANDARD VALVE BOX EXTENSION	21	VF	6
276	COT 325	SODDING AND SEEDING	23	SY	280
277	COT 326	STREET WASH DOWN		LF	514
278	COT 327	SIGNS 48" X 48"		SD	10
279	COT 327	TUBE CHANNELIZERS		SD	400
280	COT 327	TYPE III BARRICADE		SD	20
281	COT 327	FLAGGER		MD	20
283	COT 329	TEMPORARY AGGREGATE SURFACE		SY	29
284	COT 329	PAVEMENT, REMOVAL AND REPLACEMENT (ASPHALT)		SY	29
285	COT 329	PAVEMENT, REMOVAL AND REPLACEMENT (CURB & GUTTER)		LF	20
286	COT 329	SAWCUT		LF	84
287	COT 330	TEMPORARY SILT FENCE		LF	480
288	SPECIAL	LICENSED AND BONDED PLUMBER	13, 17	EA	6

NON-PARTICIPATING WATERLINE SUMMARY SCHEDULE - PVC OPTION - LINE - 3

ITEM NO.	SPEC NO.	ITEM DESCRIPTION	NOTES	UNIT	QUANTITY
292	COT 309	8 INCH PVC AWWA C900 CLASS 200 DR-14	1,2,3,9,10,27	LF	114
293	COT 309	8 INCH PVC AWWA C900 CLASS 200 DR-14 (RJ)	1,2,3,8,9,10,27	LF	470
295	COT 312	8 INCH DUCTILE IRON 11-1/4 DEGREE BEND (RJ)	2,8	EA	1
297	COT 312	8 INCH DUCTILE IRON 22-1/2 DEGREE BEND (RJ)	2,8	EA	11
299	COT 312	8 INCH DUCTILE IRON 45 DEGREE BEND (RJ)	2,8	EA	12
301	COT 312	8 INCH X 6 INCH DUCTILE IRON TEE (RJ)	2,8	EA	1
304	COT 312	6 INCH DUCTILE IRON PLUG (RJ)	2,8	EA	2
307	COT 317	8 INCH GATE VALVE (RJ)	8,21	EA	1

NON-PARTICIPATING WATERLINE SUMMARY SCHEDULE - HDPE OPTION - LINE -3

ITEM NO.	SPEC NO.	ITEM DESCRIPTION	NOTES	UNIT	QUANTITY
309	COT 309A	8 INCH HDPE AWWA C906 PE4710 DR-11 (DIPS)	1,2,3,8,9,10,19,27	LF	584
310	COT 312A	8 INCH HDPE 45 DEGREE BEND (DIPS)		EA	12
311	COT 312A	8 INCH X 8 INCH HDPE TEE (DIPS)	20	EA	1
313	COT 312A	8 INCH HDPE MJ ADAPTOR (DIPS) (RJ)		EA	10
314	COT 312A	8 INCH HDPE WALL ANCHOR (DIPS) (RJ)	26	EA	5
315	COT 312	6 INCH DUCTILE IRON PLUG (RJ)	2,8	EA	2
317	COT 317	8 INCH GATE VALVE (RJ)	8,21	EA	1

NON-PARTICIPATING WATERLINE SUMMARY SCHEDULE - DIP OPTION LINE-3

ITEM NO.	SPEC NO.	ITEM DESCRIPTION	NOTES	UNIT	QUANTITY
318	COT 307	8 INCH DIP, CL51 POLYETHYLENE WRAPPED	1,2,3,9,11,27	LF	170
319	COT 307	8 INCH DIP, CL51 POLYETHYLENE WRAPPED (RJ)	1,2,3,8,9,11,27	LF	414
322	COT 312	8 INCH DUCTILE IRON 11-1/4 DEGREE BEND (RJ)	2,8	EA	1
324	COT 312	8 INCH DUCTILE IRON 22-1/2 DEGREE BEND (RJ)	2,8	EA	11
326	COT 312	8 INCH DUCTILE IRON 45 DEGREE BEND (RJ)	2,8	EA	12
328	COT 312	8 INCH X 6 INCH DUCTILE IRON TEE (RJ)	2,8	EA	1
332	COT 312	6 INCH DUCTILE IRON PLUG (RJ)	2,8	EA	2
334	COT 317	8 INCH GATE VALVE (RJ)	8,21	EA	1

LICENSED PROFESSIONAL ENGINEER
BENJAMIN W. FLETCHER
PE 24921
OKLAHOMA

8/7/2020

WATERLINE SUMMARY SCHEDULES

PROJECT #144628-W, TMUA-W 18-16

MAINTENANCE ZONE 6028-W
TUPELO CREEK DRAINAGE

CITY OF TULSA, OKLAHOMA
ENGINEERING SERVICES DEPARTMENT

PLANS AND ESTIMATES PREPARED BY:
Meshek & Associates, L.L.C.
1437 S. Boulder Avenue, Suite 1550 Tulsa, OK 74119 (918)392-5620

REVISION	BY	DATE

PLAN SCALE	DRAWN	SCB	08/20
N/A	DESIGNED	BWF	08/20
	SURVEY	AB	08/18
PROFILE SCALE	PROJ. MGR.		
HORIZONTAL: N/A	LEAD ENGR.		
	FIELD MGR.		
VERTICAL: N/A	RECOMMENDED DESIGN MANAGER		
FILE:	DRAWING:		
ATLAS PAGE NO. 235			

APPROVED:

CITY ENGINEER

DATE:

SHEET 12 OF 161 SHEETS

PROJECT #144628-W, TMUA-W 18-16 MAINTENANCE ZONE 6028-W

PRINT DATE: 08/07/2020 M:\City_of_Tulsa\18TUL02_MZ6028_Tupelo_Creek_Drainage\Design\Drawings\18TUL02_WL_PAY_ITEMS_AND_NOTES.dwg

NON-PARTICIPATING WATERLINE SUMMARY SCHEDULE - BASE BID - LINE - 4					
ITEM NO.	SPEC NO.	ITEM DESCRIPTION	NOTES	UNIT	QUANTITY
265	COT 301	RIGHT-OF-WAY CLEARING AND RESTORING, COMPLETE IN PLACE	4,5,6,7,22	SY	1317
266	COT 302	EXCAVATION AND BACKFILL, UNCLASSIFIED	14	CY	602
267	COT 302	TYPE 'A' AGGREGATE BACKFILL	14	CY	101
268	COT 315	3/4 INCH WATER SERVICE CONNECTION (LONG)	13,15,16,17	EA	11
269	COT 315	3/4 INCH WATER SERVICE CONNECTION (SHORT)	13,15,16,17	EA	14
270	COT 315	3/4 INCH WATER METER SETTER, CAN, LID, RIM		EA	25
271	COT 315	3/4 INCH BORE UNDER STREET FOR LONG SERVICE		EA	2
272	COT 317	6 INCH FIRE HYDRANT EXTENSION		EA	2
273	COT 317	3-WAY FIRE HYDRANT, (RJ) (COMPLETE IN PLACE)		EA	2
274	COT 318	STANDARD VALVE BOX	21	EA	8
275	COT 318	STANDARD VALVE BOX EXTENSION	21	VF	24
276	COT 325	SODDING AND SEEDING	23	SY	714
277	COT 326	STREET WASH DOWN		LF	989
278	COT 327	SIGNS 48" X 48"		SD	120
279	COT 327	TUBE CHANNELIZERS		SD	4740
280	COT 327	TYPE III BARRICADE		SD	240
281	COT 327	FLAGGER		MD	120
282	COT 328	BORE (6" OR 8" WATERLINE)		LF	160
283	COT 329	TEMPORARY AGGREGATE SURFACE		SY	20
284	COT 329	PAVEMENT, REMOVAL AND REPLACEMENT (ASPHALT)		SY	20
285	COT 329	PAVEMENT, REMOVAL AND REPLACEMENT (CURB & GUTTER)		LF	10
286	COT 329	SAWCUT		LF	134
287	COT 330	TEMPORARY SILT FENCE		LF	1071
288	SPECIAL	LICENSED AND BONDED PLUMBER	13, 17	EA	25

NON-PARTICIPATING WATERLINE SUMMARY SCHEDULE - PVC OPTION - LINE - 4					
ITEM NO.	SPEC NO.	ITEM DESCRIPTION	NOTES	UNIT	QUANTITY
290	COT 309	6 INCH PVC AWWA C900 CLASS 200 DR-14	1,2,3,9,10,27	LF	835
291	COT 309	6 INCH PVC AWWA C900 CLASS 200 DR-14 (RJ)	1,2,3,8,9,10,27	LF	321
294	COT 312	6 INCH DUCTILE IRON 11-1/4 DEGREE BEND (RJ)	2,8	EA	1
296	COT 312	6 INCH DUCTILE IRON 22-1/2 DEGREE BEND (RJ)	2,8	EA	8
298	COT 312	6 INCH DUCTILE IRON 45 DEGREE BEND (RJ)	2,8	EA	8
300	COT 312	6 INCH X 6 INCH DUCTILE IRON TEE (RJ)	2,8	EA	3
306	COT 317	6 INCH GATE VALVE (RJ)	8,21	EA	9

NON-PARTICIPATING WATERLINE SUMMARY SCHEDULE - HDPE OPTION - LINE -4					
ITEM NO.	SPEC NO.	ITEM DESCRIPTION	NOTES	UNIT	QUANTITY
308	COT 307	8 INCH DIP, CL 51 POLYETHYLENE WRAPPED (RJ)	1,2,3,9,11,27	LF	15
309	COT 309A	8 INCH HDPE AWWA C906 PE4710 DR-11 (DIPS)	1,2,3,8,9,10,19,27	LF	1141
310	COT 312A	8 INCH HDPE 45 DEGREE BEND (DIPS)		EA	8
311	COT 312A	8 INCH X 8 INCH HDPE TEE (DIPS)	20	EA	3
313	COT 312A	8 INCH HDPE MJ ADAPTOR (DIPS) (RJ)		EA	8
314	COT 312A	8 INCH HDPE WALL ANCHOR (DIPS) (RJ)	26	EA	10
317	COT 317	8 INCH GATE VALVE (RJ)	8,21	EA	9

NON-PARTICIPATING WATERLINE SUMMARY SCHEDULE - DIP OPTION LINE-4					
ITEM NO.	SPEC NO.	ITEM DESCRIPTION	NOTES	UNIT	QUANTITY
318	COT 307	6 INCH DIP, CL51 POLYETHYLENE WRAPPED	1,2,3,9,11,27	LF	861
319	COT 307	6 INCH DIP, CL51 POLYETHYLENE WRAPPED (RJ)	1,2,3,8,9,11,27	LF	295
322	COT 312	6 INCH DUCTILE IRON 11-1/4 DEGREE BEND (RJ)	2,8	EA	1
324	COT 312	6 INCH DUCTILE IRON 22-1/2 DEGREE BEND (RJ)	2,8	EA	8
326	COT 312	6 INCH DUCTILE IRON 45 DEGREE BEND (RJ)	2,8	EA	8
328	COT 312	6 INCH X 6 INCH DUCTILE IRON TEE (RJ)	2,8	EA	3
334	COT 317	6 INCH GATE VALVE (RJ)	8,21	EA	9

WATER METER SCHEDULE - E. 16TH ST. S.					
PROPERTY OWNER	ADDRESS	STATION	OFFSET	TYPE	SERVICE SIZE
GARCIA, MARY R PEUGH	1606 S. 117TH E. AVE.	112+66.71	27.52 RT	SHORT	3/4"
COOPER, CAREY BRENT AND DORA LYNN	11703 E. 16TH ST. S.	113+65.97	28.44 LT	LONG	3/4"
SMITH, EDWARD W AND BARBARA J TAKE	11708 E. 16TH ST. S.	114+46.09	29.01 RT	SHORT	3/4"
GR UNIQUE INVESTMENT PROPERTIES LLC	11709 E. 16TH ST. S.	114+49.19	28.41 LT	LONG	3/4"
ABDALLA, ALICE A	11722 E. 16TH ST. S.	115+87.86	29.15 RT	SHORT	3/4"
PETERSON, PATRICIA M	11725 E. 16TH ST. S.	116+53.17	28.35 LT	LONG	3/4"
ORITZ, CHRISTIAN ERNESTO AND LAURA MAY	1607 S. 118TH E. AVE.	117+53.86	28.54 RT	SHORT	3/4"

WATER METER SCHEDULE - S. 116TH E. AVE.					
PROPERTY OWNER	ADDRESS	STATION	OFFSET	TYPE	SERVICE SIZE
PYEATT, JASON NEALE	11635 E. 16TH ST S.	200+51.54	23.04 RT	SHORT	3/4"
HOLMAN, WILLIAM EUGENE AND MARY JO	1537 S. 116TH E. AVE.	201+45.34	23.49 RT	SHORT	3/4"
THORSEN, LARRY R AND PEGGY A	1533 S. 116TH E. AVE.	201+61.84	23.54 RT	SHORT	3/4"
MENDOZA, JAVIER	1529 S. 116TH E. AVE.	202+45.98	23.52 RT	SHORT	3/4"
BREIEN, JACK E JR AND KIMBERLEE M	1530 S. 116TH E. AVE.	202+51.40	22.49 LT	LONG	3/4"
OLUSOGA, SAMELLA JANE AND ADESINMA	1524 S. 116TH E. AVE.	203+14.79	22.60 LT	LONG	3/4"
HADDOCK, WILLIAM D AND GLENITA	1523 S. 116TH E. AVE.	203+17.34	23.40 RT	SHORT	3/4"
AMPARAN, FRANCISCO C MELENDEZ	1520 S. 116TH E. AVE.	203+79.54	22.71 LT	LONG	3/4"
HUD	1514 S. 116TH E. AVE.	204+41.79	22.85 LT	LONG	3/4"
TURLEY, THERESA LYNN	1510 S. 116TH E. AVE.	204+90.13	23.09 LT	LONG	3/4"

WATER METER SCHEDULE - S. 117TH E. AVE. CUL-DE-SAC					
PROPERTY OWNER	ADDRESS	STATION	OFFSET	TYPE	SERVICE SIZE
MEDRANO, ELVIN OMAR OLIVA AND LESBY	1516 S. 117TH E. AVE.	301+96.15	47.70 LT	SHORT	3/4"
DIAZ, ALFREDO GARCIA	1510 S. 117TH E. AVE.	302+18.81	40.93 LT	SHORT	3/4"
HARRIS, LEWANA M.	1505 S. 117TH E. AVE.	302+39.42	13.18 RT	SHORT	3/4"
POWERS, RAYMOND DEMPSEY REV. TRUST	1509 S. 117TH E. AVE.	302+17.22	42.36 RT	SHORT	3/4"
LAGERS, DARRIN SCOTT AND SHANNON KAY	1515 S. 117TH E. AVE.	301+59.61	34.27 RT	SHORT	3/4"
MARKLAND, KARLENE SUSAN	11719 E. 16TH ST. S.	300+76.19	23.61 RT	SHORT	3/4"

WATER METER SCHEDULE - S. 117TH E. AVE.					
PROPERTY OWNER	ADDRESS	STATION	OFFSET	TYPE	SERVICE SIZE
CLEAR, LURA SUE AND DON W	1612 S. 117TH E. AVE.	401+45.73	22.73 RT	LONG	3/4"
BROWN, LARRY R	1613 S. 117TH E. AVE.	402+08.31	23.23 LT	SHORT	3/4"
LUNDQUIST, DAVID R AND CAROLE E TRUST	1618 S. 117TH E. AVE.	402+23.55	22.78 RT	LONG	3/4"
MEYER, JUDITH L	1619 S. 117TH E. AVE.	402+56.93	23.20 LT	SHORT	3/4"
PEREZ, FIDEL AND BERTHA	1628 S. 117TH E. AVE.	403+22.63	22.84 RT	LONG	3/4"
RAMSEY, BOBBY G AND CATHERINE A	1627 S. 117TH E. AVE.	403+60.84	23.14 LT	SHORT	3/4"
BROWN - MEYERS LLC	1636 S. 117TH E. AVE.	404+39.22	22.91 RT	LONG	3/4"
PRYOR, PERRY R AND TONY RF	1637 S. 117TH E. AVE.	404+53.50	23.08 LT	SHORT	3/4"
GARCIA, FRANCISCO J	1642 S. 117TH E. AVE.	405+19.10	22.95 RT	LONG	3/4"
HANEY, MARY E	1641 S. 117TH E. AVE.	405+50.52	23.03 LT	SHORT	3/4"
CASE, CLYDE J AND COLLEEN	1646 S. 117TH E. AVE.	405+87.21	22.99 RT	LONG	3/4"
OAK CREEK PROPERTIES LLC	1650 S. 117TH E. AVE.	406+28.30	54.40 RT	LONG	3/4"

WATER METER SCHEDULE - E. 17TH PL. S.					
PROPERTY OWNER	ADDRESS	STATION	OFFSET	TYPE	SERVICE SIZE
PADILLA, SONIA MARTINEZ	11715 E. 17TH PL. S.	406+09.71	23.00 LT	SHORT	3/4"
FLORES, ERICA	11704 E. 17TH PL. S.	406+52.54	73.26 RT	LONG	3/4"
WALKER, JENNIFER	11708 E. 17TH PL. S.	406+83.35	50.14 RT	LONG	3/4"
RUSSELL, LILAH F REV TRUST	11714 E. 17TH PL. S.	407+57.57	22.91 RT	SHORT	3/4"
GEARHART, STEVEN M AND JUSTINE D	11726 E. 17TH PL. S.	408+78.21	23.18 RT	SHORT	3/4"
KING AND KING PROPERTIES LLC	11730 E. 17TH PL. S.	409+16.82	78.18 RT	SHORT	3/4"

WATER METER SCHEDULE - S. 118TH E. AVE.					
PROPERTY OWNER	ADDRESS	STATION	OFFSET	TYPE	SERVICE SIZE
AGUIRRE, NOE VEGA	1648 S. 118TH E. AVE.	408+43.76	23.28 LT	LONG	3/4"
GARCIA-OLMOS, JESUS AND MAYRA G	1661 S. 118TH E. AVE.	409+27.87	87.16 RT	SHORT	3/4"
H AND C INVESTMENT PROPERTIES LLC	1651 S. 118TH E. AVE.	409+49.45	77.43 RT	SHORT	3/4"
MILLARR, PATRICIA RUTH	1647 S. 118TH E. AVE.	409+80.34	25.20 RT	SHORT	3/4"
SMITH, LUCILLE	1641 S. 118TH E. AVE.	410+51.76	23.34 RT	SHORT	3/4"
PAGE FAMILY REV TRUST C/O GARRY MARTIN	1642 S. 118TH E. AVE.	410+52.10	22.65 LT	LONG	3/4"
LANDEROS, MARIA AND FIDEL MEZA	1637 S. 118TH E. AVE.	411+06.46	23.37 RT	SHORT	3/4"
TUCASA PROPERTIES LLC	1636 S. 118TH E. AVE.	411+39.48	22.61 LT	LONG	3/4"
STOKES, STACIE	1629 S. 118TH E. AVE.	412+24.57	23.42 RT	SHORT	3/4"
KNOWLTON, KEVIN	1628 S. 118TH E. AVE.	412+43.42	22.56 LT	LONG	3/4"
HIGHT, PEGGY	1621 S. 118TH E. AVE.	413+08.99	23.48 RT	SHORT	3/4"
AMAYA, OSCAR BARRETO	1620 S. 118TH E. AVE.	413+29.03	22.52 LT	LONG	3/4"
JRT ASSETS LLC	1615 S. 118TH E. AVE.	413+83.57	23.56 RT	SHORT	3/4"
EVANS, DARRELL LEE	1614 S. 118TH E. AVE.	413+96.26	22.49 LT	LONG	3/4"

WATER VALVE AND FIRE HYDRANT SCHEDULE						
PART ID	ITEM DESCRIPTION	NORTHING	EASTING	STATION	OFFSET	ELEVATION
1-4	8" GATE VALVE	421763.23	2604006.24	112+35.70	24.57' RT	656.00
1-6	8" GATE VALVE	421764.94	2604090.38	113+19.86	24.59' RT	656.31
1-12	8" GATE VALVE	421763.88	2604153.61	113+83.05	26.94' RT	657.50
1-14	8" GATE VALVE	421771.37	2604261.00	114+90.57	21.66' RT	656.23
1-17	8" GATE VALVE	421772.45	2604312.62	115+42.20	21.64' RT	655.89
FH-10	3-WAY HYDRANT ASSEMBLY	421764.56	2604317.14	115+46.55	29.62'RT	662.16
1-22	8" GATE VALVE	421775.49	2604460.44	116+90.05	21.63' RT	655.90
FH-1	3-WAY HYDRANT ASSEMBLY	421742.65	2604588.93	118+31.84	29.23' RT	666.39
2-1	6" GATE VALVE	421766.07	2604011.63	112+41.14	21.84' RT	656.00
FH-2	3-WAY HYDRANT ASSEMBLY	421825.57	2604012.21	200+37.64	24.38' RT	659.66
2-7	6" GATE VALVE	421828.76	2604007.80	200+40.92	20.02' RT	656.00
FH-3	3-WAY HYDRANT ASSEMBLY	422265.06	2603727.53	205+81.33	25.27' RT	656.84
2-14	6" GATE VALVE	422267.59	2603723.03	205+83.92	20.81' RT	653.75
3-14a	8" GATE VALVE	422028.57	2604298.04	302+34.75	18.35' RT	660.50
FH-4	3-WAY HYDRANT ASSEMBLY	422031.89	2604301.84	302+38.00	22.21' RT	664.94
4-3	6" GATE VALVE	421755.64	2604145.78	400+35.01	26.63' LT	657.35
FH-5	3-WAY HYDRANT ASSEMBLY	421511.26	2604187.57	402+88.47	24.56' LT	661.76
4-6	6" GATE VALVE	421504.86	2604184.55	402+94.09	20.26' LT	658.05
4-11	6" GATE VALVE	421188.17	2604252.87	406+23.86	16.54' LT	660.96
4-15	6" GATE VALVE	421118.58	2604284.02	406+89.63	23.33' RT	661.76
4-16	6" GATE VALVE	421120.09	2604375.45	407+75.02	19.39' RT	662.08
GV-1	6" GATE VALVE	421115.46	2604416.95	408+16.43	24.77' RT	662.23
4-18	6" GATE VALVE	421120.85	2604421.40	408+20.98	19.46' RT	662.25
FH-6	3-WAY HYDRANT ASSEMBLY	421116.26	2604426.87	408+97.75	31.79' RT	667.70
4-19a	6" GATE VALVE	421122.34	2604511.46	409+00.33	28.26' RT	663.75
4-30	6" GATE VALVE	421193.89	2604565.65	409+66.95	27.67' RT	662.90
4-31	6" GATE VALVE	421353.33	2604531.18	411+20.23	20.25' RT	661.62
FH-7	3-WAY HYDRANT ASSEMBLY	421436.83	2604517.86	412+04.66	24.85' RT	665.24
4-35b	6" GATE VALVE	421438.60	2604512.84	412+07.45	20.31' RT	661.37
4-39a	6" GATE VALVE	421769.08	2604452.14	415+47.99	20.48' RT	655.90
FH-8	3-WAY HYDRANT ASSEMBLY	421113.46	2604286.80	406+92.65	27.65' RT	664.75
FH-9	3-WAY FIRE HYDRANT	422056.35	2603870.11	202+99.13	25.43' RT	654.36

PROJECT #144628-W, TMUA-W 18-16 MAINTENANCE ZONE 6028-W

LICENSED PROFESSIONAL ENGINEER
BENJAMIN W. FLETCHER
24921
OKLAHOMA

8/7/2020

WATERLINE SUMMARY SCHEDULES

PROJECT #144628-W, TMUA-W 18-16

MAINTENANCE ZONE 6028-W
TUPELO CREEK DRAINAGE

CITY OF TULSA, OKLAHOMA
ENGINEERING SERVICES DEPARTMENT

PLANS AND ESTIMATES PREPARED BY:
Meshek & Associates, L.L.C.
1437 S. Boulder Avenue, Suite 1550 Tulsa, OK 74119 (918)392-5620

REVISION	BY	DATE

PLAN SCALE: N/A
PROFILE SCALE: HORIZONTAL: N/A VERTICAL: N/A

DRAWN	SCB	08/20	APPROVED:
DESIGNED	BWF	08/20	
SURVEY	AB	08/18	
PROJ. MGR.			
LEAD ENGR.			
FIELD MGR.			
RECOMMENDED			
DESIGN MANAGER			CITY ENGINEER
FILE:	DRAWING:		DATE:
ATLAS PAGE NO. 235			SHEET 13 OF 161 SHEETS

PRINT DATE: 08/07/2020 M:\City_of_Tulsa\18TUL02_WZ6028_Tupelo_Creek_Drainage\Design\Drawings\18TUL02_WL_PAY_ITEMS_AND_NOTES.dwg

FURNISHED AND INSTALLED BY CONTRACTOR						
WATERLINE SERVICE CONNECTIONS - SHEET 91						
PROPERTY OWNER	ADDRESS	STATION	OFFSET	TYPE	SERVICE SIZE	METER CAN SIZE
GARCIA, MARY R PEUGH	1606 S. 117TH E. AVE.	112+66.71	27.52 RT	SHORT	3/4"	11"
COOPER, CAREY BRENT AND DORA LYNN	11703 E. 16TH ST. S.	113+65.97	28.44 LT	LONG	3/4"	11"
SMITH, EDWARD W AND BARBARA J TAKE	11708 E. 16TH ST. S.	114+46.09	29.01 RT	SHORT	3/4"	11"
GR UNIQUE INVESTMENT PROPERTIES LLC	11709 E. 16TH ST. S.	114+49.19	28.41 LT	LONG	3/4"	11"

FURNISHED AND INSTALLED BY CONTRACTOR						
WATERLINE SERVICE CONNECTIONS - SHEET 92						
PROPERTY OWNER	ADDRESS	STATION	OFFSET	TYPE	SERVICE SIZE	METER CAN SIZE
ABDALLA, ALICE A	11722 E. 16TH ST. S.	115+87.86	29.15 RT	SHORT	3/4"	11"
PETERSON, PATRICIA M	11725 E. 16TH ST. S.	116+53.17	28.35 LT	LONG	3/4"	11"
ORITZ, CHRISTIAN ERNESTO AND LAURA MAY	1607 S. 118TH E. AVE.	117+53.86	28.54 RT	SHORT	3/4"	11"

FURNISHED AND INSTALLED BY CONTRACTOR						
WATERLINE SERVICE CONNECTIONS - SHEET 93						
PROPERTY OWNER	ADDRESS	STATION	OFFSET	TYPE	SERVICE SIZE	METER CAN SIZE
PYEATT, JASON NEALE	11635 E. 16TH ST S.	200+51.54	23.04 RT	SHORT	3/4"	11"
HOLMAN, WILLIAM EUGENE AND MARY JO	1537 S. 116TH E. AVE.	201+45.34	23.49 RT	SHORT	3/4"	11"
THORSEN, LARRY R AND PEGGY A	1533 S. 116TH E. AVE.	201+61.84	23.54 RT	SHORT	3/4"	11"

FURNISHED AND INSTALLED BY CONTRACTOR						
WATERLINE SERVICE CONNECTIONS - SHEET 94						
PROPERTY OWNER	ADDRESS	STATION	OFFSET	TYPE	SERVICE SIZE	METER CAN SIZE
MENDOZA, JAVIER	1529 S. 116TH E. AVE.	202+45.98	23.52 RT	SHORT	3/4"	11"
BREIEN, JACK E JR AND KIMBERLEE M	1530 S. 116TH E. AVE.	202+51.40	22.49 LT	LONG	3/4"	11"
OLUSOGA, SAMELLA JANE AND ADESINMA	1524 S. 116TH E. AVE.	203+14.79	22.60 LT	LONG	3/4"	11"
HADDOCK, WILLIAM D AND GLENITA	1523 S. 116TH E. AVE.	203+17.34	23.40 RT	SHORT	3/4"	11"
AMPARAN, FRANCISCO C MELENDEZ	1520 S. 116TH E. AVE.	203+79.54	22.71 LT	LONG	3/4"	11"
HUD	1514 S. 116TH E. AVE.	204+41.79	22.85 LT	LONG	3/4"	11"
TURLEY, THERESA LYNN	1510 S. 116TH E. AVE.	204+90.13	23.09 LT	LONG	3/4"	11"

FURNISHED AND INSTALLED BY CONTRACTOR						
WATERLINE SERVICE CONNECTIONS - SHEET 95						
PROPERTY OWNER	ADDRESS	STATION	OFFSET	TYPE	SERVICE SIZE	METER CAN SIZE
MEDRANO, ELVIN OMAR OLIVA AND LESBY	1516 S. 117TH E. AVE.	301+96.15	47.70 LT	SHORT	3/4"	11"
DIAZ, ALFREDO GARCIA	1510 S. 117TH E. AVE.	302+18.81	40.93 LT	SHORT	3/4"	11"

FURNISHED AND INSTALLED BY CONTRACTOR						
WATERLINE SERVICE CONNECTIONS - SHEET 96						
PROPERTY OWNER	ADDRESS	STATION	OFFSET	TYPE	SERVICE SIZE	METER CAN SIZE
HARRIS, LEWANA M.	1505 S. 117TH E. AVE.	302+39.42	13.18 RT	SHORT	3/4"	11"
POWERS, RAYMOND DEMPSEY REV. TRUST	1509 S. 117TH E. AVE.	302+17.22	42.36 RT	SHORT	3/4"	11"
LAGERS, DARRIN SCOTT AND SHANNON KAY	1515 S. 117TH E. AVE.	301+59.61	34.27 RT	SHORT	3/4"	11"
MARKLAND, KARLENE SUSAN	11719 E. 16TH ST. S.	300+76.19	23.61 RT	SHORT	3/4"	11"

FURNISHED AND INSTALLED BY CONTRACTOR						
WATERLINE SERVICE CONNECTIONS - SHEET 97						
PROPERTY OWNER	ADDRESS	STATION	OFFSET	TYPE	SERVICE SIZE	METER CAN SIZE
CLEAR, LURA SUE AND DON W	1612 S. 117TH E. AVE.	401+45.73	22.73 RT	LONG	3/4"	11"
BROWN, LARRY R	1613 S. 117TH E. AVE.	402+08.31	23.23 LT	SHORT	3/4"	11"
LUNDQUIST, DAVID R AND CAROLE E TRUST	1618 S. 117TH E. AVE.	402+23.55	22.78 RT	LONG	3/4"	11"
MEYER, JUDITH L	1619 S. 117TH E. AVE.	402+56.93	23.20 LT	SHORT	3/4"	11"

FURNISHED AND INSTALLED BY CONTRACTOR						
WATERLINE SERVICE CONNECTIONS - SHEET 98						
PROPERTY OWNER	ADDRESS	STATION	OFFSET	TYPE	SERVICE SIZE	METER CAN SIZE
PEREZ, FIDEL AND BERTHA	1628 S. 117TH E. AVE.	403+22.63	22.84 RT	LONG	3/4"	11"
RAMSEY, BOBBY G AND CATHERINE A	1627 S. 117TH E. AVE.	403+60.84	23.14 LT	SHORT	3/4"	11"
BROWN - MEYERS LLC	1636 S. 117TH E. AVE.	404+39.22	22.91 RT	LONG	3/4"	11"
PRYOR, PERRY R AND TONY RF	1637 S. 117TH E. AVE.	404+53.50	23.08 LT	SHORT	3/4"	11"
GARCIA, FRANCISCO J	1642 S. 117TH E. AVE.	405+19.10	22.95 RT	LONG	3/4"	11"
HANEY, MARY E	1641 S. 117TH E. AVE.	405+50.52	23.03 LT	SHORT	3/4"	11"

FURNISHED AND INSTALLED BY CONTRACTOR						
WATERLINE SERVICE CONNECTIONS - SHEET 99						
PROPERTY OWNER	ADDRESS	STATION	OFFSET	TYPE	SERVICE SIZE	METER CAN SIZE
CASE, CLYDE J AND COLLEEN	1646 S. 117TH E. AVE.	405+87.21	22.99 RT	LONG	3/4"	11"
PADILLA, SONIA MARTINEZ	11715 E. 17TH PL. S.	406+09.71	23.00 LT	SHORT	3/4"	11"
OAK CREEK PROPERTIES LLC	1650 S. 117TH E. AVE.	406+28.30	54.40 RT	LONG	3/4"	11"
FLORES, ERICA	11704 E. 17TH PL. S.	406+52.54	73.26 RT	LONG	3/4"	11"
WALKER, JENNIFER	11708 E. 17TH PL. S.	406+83.35	50.14 RT	LONG	3/4"	11"
RUSSELL, LILAH F REV TRUST	11714 E. 17TH PL. S.	407+57.57	22.91 RT	SHORT	3/4"	11"

FURNISHED AND INSTALLED BY CONTRACTOR						
WATERLINE SERVICE CONNECTIONS - SHEET 100						
PROPERTY OWNER	ADDRESS	STATION	OFFSET	TYPE	SERVICE SIZE	METER CAN SIZE
AGUIRRE, NOE VEGA	1648 S. 118TH E. AVE.	408+43.76	23.28 LT	LONG	3/4"	11"
GEARHART, STEVEN M AND JUSTINE D	11726 E. 17TH PL. S.	408+78.21	23.18 RT	SHORT	3/4"	11"
KING AND KING PROPERTIES LLC	11730 E. 17TH PL. S.	409+16.82	78.18 RT	SHORT	3/4"	11"
GARCIA-OLMOS, JESUS AND MAYRA G	1661 S. 118TH E. AVE.	409+27.87	87.16 RT	SHORT	3/4"	11"
H AND C INVESTMENT PROPERTIES LLC	1651 S. 118TH E. AVE.	409+49.45	77.43 RT	SHORT	3/4"	11"
MILLARR, PATRICIA RUTH	1647 S. 118TH E. AVE.	409+80.34	25.20 RT	SHORT	3/4"	11"

FURNISHED AND INSTALLED BY CONTRACTOR						
WATERLINE SERVICE CONNECTIONS - SHEET 99						
PROPERTY OWNER	ADDRESS	STATION	OFFSET	TYPE	SERVICE SIZE	METER CAN SIZE
JRT ASSETS LLC	1615 S. 118TH E. AVE.	413+83.57	23.56 RT	SHORT	3/4"	11"
EVANS, DARRELL LEE	1614 S. 118TH E. AVE.	413+96.26	22.49 LT	LONG	3/4"	11"

FURNISHED AND INSTALLED BY CONTRACTOR						
WATERLINE SERVICE CONNECTIONS - SHEET 101						
PROPERTY OWNER	ADDRESS	STATION	OFFSET	TYPE	SERVICE SIZE	METER CAN SIZE
SMITH, LUCILLE	1641 S. 118TH E. AVE.	410+51.76	23.34 RT	SHORT	3/4"	11"
PAGE FAMILY REV TRUST C/O GARRY MARTIN	1642 S. 118TH E. AVE.	410+52.10	22.65 LT	LONG	3/4"	11"
LANDEROS, MARIA AND FIDEL MEZA	1637 S. 118TH E. AVE.	411+06.46	23.37 RT	SHORT	3/4"	11"
TUCASA PROPERTIES LLC	1636 S. 118TH E. AVE.	411+39.48	22.61 LT	LONG	3/4"	11"
STOKES, STACIE	1629 S. 118TH E. AVE.	412+24.57	23.42 RT	SHORT	3/4"	11"
KNOWLTON, KEVIN	1628 S. 118TH E. AVE.	412+43.42	22.56 LT	LONG	3/4"	11"
HIGHT, PEGGY	1621 S. 118TH E. AVE.	413+08.99	23.48 RT	SHORT	3/4"	11"
AMAYA, OSCAR BARRETO	1620 S. 118TH E. AVE.	413+29.03	22.52 LT	LONG	3/4"	11"

PROJECT #144628-W, TMUA-W 18-16 MAINTENANCE ZONE 6028-W



8/7/2020

WATERLINE SUMMARY SCHEDULES

PROJECT #144628-W, TMUA-W 18-16

MAINTENANCE ZONE 6028-W
TUPELO CREEK DRAINAGE

CITY OF TULSA, OKLAHOMA
ENGINEERING SERVICES DEPARTMENT

PLANS AND ESTIMATES PREPARED BY:
Meshek & Associates, L.L.C.
1437 S. Boulder Avenue, Suite 1550 Tulsa, OK 74119 (918)392-5620

REVISION	BY	DATE

PLAN SCALE	DRAWN	SCB	08/20	APPROVED:
N/A	DESIGNED	BWF	08/20	
	SURVEY	AB	08/18	
PROFILE SCALE	PROJ. MGR.			
HORIZONTAL: N/A	LEAD ENGR.			
	FIELD MGR.			
VERTICAL: N/A	RECOMMENDED			
	DESIGN MANAGER			CITY ENGINEER
FILE:	DRAWING:			DATE:
ATLAS PAGE NO. 235				SHEET 14 OF 161 SHEETS

PRINT DATE: 08/07/2020 M:\City_of_Tulsa\18TUL02_WZ6028_Tupelo_Creek_Drainage\Design\Drawings\18TUL02_WL_PAY_ITEMS_AND_NOTES.dwg

GENERAL CONSTRUCTION NOTES

1. THE CONTRACTOR SHALL COMPLY WITH ALL APPLICABLE FEDERAL, STATE, AND LOCAL LAWS. RULES AND REGULATIONS GOVERNING SAFETY, HEALTH, AND SANITATION. THE CONTRACTOR SHALL PROVIDE ALL SAFEGUARDS, SAFETY DEVICES, AND PROTECTIVE EQUIPMENT REQUIRED AND SHALL TAKE ANY OTHER NEEDED ACTIONS ON HIS OWN RESPONSIBILITY OR AS MAY BE REQUIRED AS DETERMINED BY THE CITY OR THE ENGINEER TO PROTECT PROPERTY OR THE PUBLIC IN CONNECTION WITH THE WORK COVERED BY THIS CONTRACT.
2. ALL CONSTRUCTION AND MATERIALS SHALL BE IN ACCORDANCE WITH THE CURRENT EDITION OF THE CITY OF TULSA ENGINEERING SERVICES STANDARDS AND SPECIFICATIONS AND IN ACCORDANCE WITH THE SPECIAL PROVISIONS OF THIS CONTRACT.
3. THE CONTRACTOR SHALL, IN COOPERATION WITH THE CITY, DEVELOP AND SUBMIT FOR APPROVAL A TRAFFIC CONTROL PLAN (TCP), TO THE CITY OF TULSA ENGINEERING SERVICES, FIELD ENGINEERING. THIS TCP SHALL DETAIL SUCH MEASURES AS MAY BE REQUIRED TO ESTABLISH, INSTALL, MAINTAIN, AND OPERATE A COMPLETE, ADEQUATE, AND SAFE TRAFFIC CONTROL SYSTEM DURING THE ENTIRE CONSTRUCTION PERIOD. THE CONTRACTOR SHALL PLACE TRAFFIC FLAGMEN, BARRICADES, SIGNS, SIGNALS, OR OTHER DEVICES AS MAY BE REQUIRED.
4. THE CONTRACTOR SHALL BE RESPONSIBLE FOR THE IMPLEMENTATION, PERMITTING, AND EXECUTION OF A STORMWATER POLLUTION PREVENTION PLAN (SWP3). THE CONTRACTOR SHALL PROVIDE ALL DOCUMENTATION REQUIRED OF SWP3 FOR REVIEW AND APPROVAL OF THE PLAN BY FEDERAL, STATE, AND LOCAL AUTHORITIES. THIS INCLUDES, BUT IS NOT LIMITED TO, THE NOTICE OF INTENT AND THE NOTICE OF TERMINATION.
5. THE CONTRACTOR SHALL SUBMIT A TRENCH EXCAVATION PLAN, SEALED BY A PROFESSIONAL ENGINEER IN THE STATE OF OKLAHOMA, FOR ALL LOCATIONS WHERE TRENCH OR SHAFT EXCAVATION EXCEEDS 20 FEET DEEP.
6. BORING LOGS FOR THIS PROJECT ARE AVAILABLE FOR REVIEW AT THE OFFICES OF MESHEK & ASSOCIATES, LLC, 1437 S. BOULDER AVE., STE. 1550, TULSA, OK. NEITHER THE CITY NOR THE ENGINEER MAKES OR ACCEPTS, EXPRESS OR IMPLIES, ANY WARRANTIES ABOUT THE INFORMATION SHOWN ON THESE BORING LOGS.
   IF ROCK IS ENCOUNTERED, AND THE CONTRACTOR CHOOSES TO BLAST, BLASTING WILL CONFORM TO THE CITY OF TULSA BLASTING ORDINANCE.
7. ALL EXCAVATED MATERIAL NOT NEEDED OR DEEMED UNSUITABLE FOR BACKFILL SHALL BECOME THE PROPERTY OF THE CONTRACTOR AND BE DISPOSED OF IN A LOCATION AND MANNER APPROVED BY THE CITY. THE CONTRACTOR WILL BE REQUIRED TO OBTAIN AN EARTH CHANGE PERMIT IF THIS MATERIAL IS TO BE DISPOSED OF WITHIN THE CITY OF TULSA.
8. BACKFILL UNDER ALL PAVED SURFACES SHALL BE TYPE "A" AGGREGATE BASE PLACED IN 8" MAXIMUM LIFTS AND COMPACTED BY A VIBRATORY HAND TAMPER TO 95% OF THE STANDARD PROCTOR DENSITY, AS MEASURED BY THE NUCLEAR DENSITY METHOD.
9. ALL NEW MANHOLES SHALL BE VACUUM TESTED IN ACCORDANCE WITH THE CITY OF TULSA ENGINEERING SERVICES DEPARTMENT STANDARDS.
10. THE CONTRACTOR SHALL PROVIDE A DETAILED ACCESS PLAN FOR THE CONSTRUCTION OF THE PROJECT. THE CONTRACTOR IS RESPONSIBLE FOR ALL COSTS, CONSTRUCTION ACTIVITIES, AND PERMITS THAT MAY BE NEEDED FOR THE IMPLEMENTATION OF THIS PLAN.
    THE CONTRACTOR SHALL BE RESPONSIBLE FOR THE VERIFICATION OF THE LOCATION OF ALL EXISTING SANITARY SEWER SERVICE LATERALS IN THE PROJECT AREA. IF ENCOUNTERED OR DAMAGED DURING CONSTRUCTION, EXISTING SERVICE LATERALS SHALL BE EMOVED AND REPLACED USING PIPE OF THE SAME SIZE AND MATERIAL AS THE EXISTING SEWER.
11. NO FILL, SPOIL, BEDDING MATERIAL OR EQUIPMENT MAY BE STORED OVERNIGHT WITHIN THE FLOOD PLAIN LIMITS.
12. ALL SEWERS SCHEDULED FOR ABANDONMENT AS PART OF THIS PROJECT SHALL BE FILED WITH FLOWABLE FILL, SAND, OR CELLULAR CONCRETE AND THEN PLUGGED.
13. ALL DAMAGED PAVEMENT OUTSIDE OF THE TRENCH PAYLINE SHALL BE RESTORED AT THE CONTRACTOR'S EXPENSE.
14. CONTRACTOR SHALL BE RESPONSIBLE FOR TRENCH DEWATERING, NO SEPARATE PAYMENT WILL BE MADE FOR THIS WORK.
15. CONTRACTOR SHALL REPAIR ANY IRRIGATION SYSTEMS DAMAGED DURING THE COURSE OF CONSTRUCTION. PAYMENT SHALL BE INCLUDED IN RIGHT-OF-WAY CLEARING AND RESTORING. NO ADDITIONAL PAYMENTS SHALL BE MADE.
16. ALL SANITARY SEWER AND STORM SEWER MANHOLE CASTING AND LIDS THAT ARE LOCATED IN THE STREET AND ARE DISTURBED BY THE CONTRCTOR SHALL BE REPLACED WITH NEW ONES, AND THE OLD CASTINGS AND LIDS SHALL BE DELIVERED TO THE SEWER BASE AT 9319 E. 42ND STREET N. AND PLACED IN THE METAL RECYCLE BIN IN THE STOCKROOM AREA 918-669-6130, BETWEEN THE HOURS OF 7:30 AM AND 3:00 PM MONDAY THROUGH FRIDAY.
17. CONTRACTOR SHALL MAINTAIN FULL OPERATION OF SANITARY SERVICES OF THE EXISTING SYSTEM UNTIL THE PROPOSED SYSTEM IS OPERATIONAL.
18. ALL BORED SEWER LINES WILL REQUIRE STEEL CASING TO BE BORED WITH RESTRAINED SEWER PIPE IN THE CASING. FOR 8" PVC PIPE USE 20" DIAMETER STEEL CONDUIT. FOR 12" PVC PIPE USE 24" DIAMETER STEEL CONDUIT.

TRAFFIC CONTROL

1. ALL TRAFFIC CONTROL DEVICES, CONSTRUCTION SIGNAGE, BARRICADING, ETC. SHALL BE IN ACCORDANCE WITH THE LATEST REVISED EDITION OF THE MANUAL ON UNIFORM TRAFFIC CONTROL DEVICES (MUTCD). CONTRACTOR SHALL PREPARE AND SUBMIT FOR APPROVAL A TRAFFIC CONTROL PLAN (TCP).
2. THE CONTRACTOR SHALL PROVIDE 48 HOURS NOTIFICATION FOR ANY AND ALL STREET/LANE CLOSURES, MODIFICATION, OR CHANGES TO THE TRAFFIC,

POLICE	918-596-9222
FIRE	918-596-9977
COT TRAFFIC	918-596-9744
EMSA	918-596-3043
MTTA	918-585-1195

3. THE CONTRACTOR SHALL NOTIFY TRAFFIC OPERATIONS 48 HOURS PRIOR TO STARTING WORK OR PRIOR TO REMOVING OR RELOCATING ANY TRAFFIC SIGNS. ALL SIGNS SHALL BE HANDLED SO AS TO AVOID ANY DAMAGE TO THE SIGN OR POST. ALL SIGNS REMOVED DUE TO CONSTRUCTION SHALL BE REINSTALLED BY THE CONTRACTOR.
4. THE CONTRACTOR SHALL BE RESPONSIBLE FOR THE MAINTENANCE OF ALL CONSTRUCTION SIGNAGE AND BARRICADING, INCLUDING, BUT NOT LIMITED TO, WASHING, REPLACEMENT, REPOSITIONING OF DEVICES, WHEN AND WHERE IT IS DEEMED NECESSARY BY THE CITY OR THE ENGINEER, THE CONRACTOR SHALL FURNISH AND INSTALL ANY ADDITIONAL TRAFFIC CONTROL DEVICES.
5. LOCAL AND THROUGH TRAFFIC SHALL BE MAINTAINED THROUGH THE PROJECT AREA AT ALL TIMES. LOCAL TRAFFIC TO ALL PUBLIC AND PRIVATE STREETS SHALL BE ACCESSIBLE FROM ANY DETOURS DURING CONSTRUCTION OF THIS PROJECT.
6. ROADSIDE HAZARDS SHALL BE COMPLETELY BARRICADED AROUND THEIR PERIMETER FOR SAFETY OF PEDESTRIANS AND VEHICLES. NO BARRICADES SHALL BE PLACED UNTIL ALL ADVANCED SIGNING IS IN PLACE.
7. ALL CHANNELING DEVICES, TYPE III BARRICADES, ETC., SHALL BE WEIGHTED DOWN WITH A NON-HAZARDOUS MATERIAL WHEN NECESSARY OR WHEN DIRECTED BY THE CITY OR THE ENGINEER.
8. ALL ADVANCE WARNING SIGNS SHALL BE PROVIDED WITH TYPE "A" WARNING LIGHTS.
9. ALL TYPE III BARRICADES SHALL BE FURNISHED WITH A MINIMUM OF TWO (2) TYPE "A" WARNING LIGHTS.
10. ALL CHANNELING DEVICES SHALL BE PROVIDED WITH TYPE "C" WARNING LIGHTS.

ALL SANITARY SEWER CONSTRUCTION SHALL BE PER CITY OF TULSA STANDARD SPECIFICATIONS AND STANDARD DETAILS (CURRENT EDITION).

UTILITIES

1. THE LOCATION OF THE UTILITY LINES, AS SHOWN ON THESE DRAWINGS, ARE BASED ON ATLAS INFORMATION AND OBSERVED FEATURES. NEITHER THE CITY NOR THE ENGINEER ASSUMES OR IMPLIES ANY RESPONSIBILITY FOR THE ACCURACY OF THIS DATA. SERVICE LINES FROM THE MAIN UTILITY LINES TO ANY BUILDING OR FACILITY MAY NOT BE SHOWN. CONTRACTOR SHALL OBTAIN THE LOCATION OF THESE FROM THE UTILITY COMPANY AND SHALL BE HELD RESPONSIBLE FOR ANY DAMAGES TO THESE LINES OR ANY OTHER LINES OR UTILITIES DURING THE CONSTRUCTION OF THIS PROJECT.
2. THE CONTRACTOR SHALL GIVE NOTIFICATION CENTER OF THE OKLAHOMA ONE-CALL SYSTEM, INC., A MINIMUM OF TWO (2) WORKING DAYS AND A MAXIMUM OF TEN (10) WORKING DAYS PRIOR TO BEGINNING WORK IN ANY AREA. PHONE: 1-800-522-6543.

SPECIAL NOTES

1. SEQUENTIAL RESTORATION

   THIS RESTORATION SHALL INCLUDE, BUT IS NOT LIMITED TO, SUCH ITEMS AS SODDING, REPLACEMENT OF SIDEWALKS, FENCES, DRIVEWAYS, AND STREET PAVEMENT. GROUTING OF SEWER SCHEDULED TO BE ABANDONED, AND ANY OTHER ITEMS SPECIFICALLY SHOWN ON THE PLANS.

   ANY RESTORATION WORK DAMAGED OR DESTROYED BY THE CONTRACTOR'S SUBSEQUENT WORK SHALL BE REPLACED BY THE CONTRACTOR AT HIS EXPENSE. NO ADDITIONAL PAYMENT SHALL BE MADE FOR SEQUENTIAL RESTORATION.
2. PROPERTY OWNER NOTIFICATIONS

   ALL PROPERTY OWNERS ADJACENT TO THE ALIGNMENT SHALL BE NOTIFIED OF THE PROJECT WITHIN 7 CALENDAR DAYS BEFORE CONSTRUCTION OR ADJACENT TO THE PROPERTY, AND A MINIMUM OF 48 HOURS BEFORE CONSTRUCTION.
3. TRANSITIONS BETWEEN PIPE TYPES

   TRANSITION BETWEEN PIPE TYPES MAY ONLY BE MADE AT MANHOLES. IN THE EVENT THE CONTRACTOR DESIRES TO MAKE A TRANSITION BETWEEN PIPE TYPES AT ANY OTHER POINT, THEY SHALL INSTALL AN ADDITIONAL MANHOLE AT THE POINT OF TRANSITION BETWEEN THE PIPE TYPES. THIS TRANSITION MANHOLE WILL BE CONSIDERED AS INCIDENTAL WORK AND WILL NOT BE MEASURED FOR PAYMENT.
4. ASPHALT STREET REPAIR

   AFTER PIPE INSTALLATION, THE CONTRACTOR SHALL BACKFILL & PATCH EXISTING ASPHALT STREETS, AND WHERE NOTED IN THE DRAWINGS, CONTRACTOR WILL MILL AND CONSTRUCT A 2 INCH ASPHALT OVERLAY ACROSS THE ENTIRE WIDTH OF THE STREET FROM CURB TO CURB IN ACCORDANCE WITH THE CITY OF TULSA STANDARD DRAWING NO. 733.
5. CONCRETE STREET REPAIR

   ALL CONRETE PAVEMENT CUTS SHALL BE IN ACCORDANCE WITH DETAIL NO. 714 AND STD. DRAWING NO. 733. LIMITS OF PAYMENT ARE APPROXIMATE. CONTRACTOR SHALL BE RESPONSIBLE FOR EXACT LOCATION OF CONSTRUCTION JOINTS.
6. TRENCH SAFETY

   CONTRACTOR SHALL FOLLOW REQUIREMENTS FOR EXCAVATION AND TRENCH SAFETY PER CITY OF TULSA SPECIFICATION NO. 112 AND GUIDELINES SET BY THE U.S. DEPARTMENT OF LABOR OCCUPATIONAL SAFETY AND HEALTH ADMINISTRATION (OSHA). TRENCH SAFETY SHALL BE CONSIDERED AS INCIDENTAL WORK AND WILL NOT BE MEASURED FOR PAYMENT.

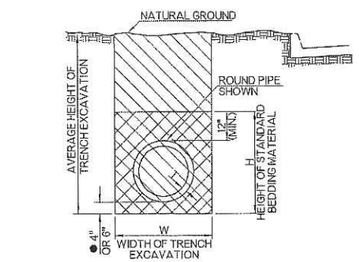

CITY OF TULSA STANDARDS	
DESCRIPTION	STANDARD NO.
BORE/OPEN CUT CONDUIT	307
MANHOLE STEPS	314
BEDDING FOR PVC	351
4' MANHOLE	353
LARGER MANHOLE	354
IN-LINE SERVICE CONNECTION	361
INVERT DETAILS	366
PAVEMENT REMOVAL AND REPLACEMENT	713

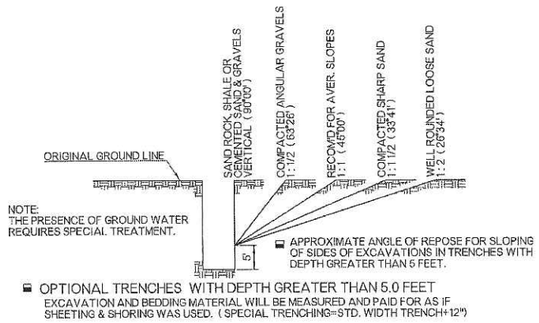

TRENCH DETAIL
N.T.S.

SANITARY SEWER PIPE SUMMARY								
Pipe ID	Shape	Width	Slope	Pipe Slope Length	Invert In	Invert Out	Upstream ID	Downstream ID
		(IN)	(%)	(FT)	(FT)	(FT)		
P1	Circular	12	1.10	134	648.48	647.00	SSMH2	SSMH1
P2	Circular	12	0.45	72	648.90	648.58	SSMH3	SSMH2
P3	Circular	12	0.50	270	650.35	649.00	SSMH4	SSMH3
P4	Circular	12	0.50	208	651.49	650.45	SSMH5	SSMH4
P5	Circular	12	0.50	217	652.68	651.59	SSMH6	SSMH5
P6	Circular	12	0.80	133	654.05	652.99	SSMH7	SSMH6
P7	Circular	12	0.88	42	654.52	654.15	SSMH8	SSMH7
P8	Circular	12	0.46	124	655.19	654.62	SSMH9	SSMH8
P9	Circular	12	0.46	61	655.57	655.29	SSMH10	SSMH9
P10	Circular	8	0.61	69	656.09	655.67	SSMH11	SSMH10
P11	Circular	8	0.40	142	656.66	656.09	SSMH12	SSMH11
P12	Circular	8	0.40	84	657.00	656.66	SSMH13	SSMH12
P13	Circular	8	0.40	136	657.85	657.31	SSMH14	SSMH13
P14	Circular	8	0.42	289	653.98	652.78	SSMH15	SSMH6
P15	Circular	8	0.41	27	654.24	654.13	SSMH16	SSMH15
P16	Circular	8	0.40	214	655.09	654.24	SSMH17	SSMH16

SANITARY SEWER MANHOLE SUMMARY											
ID	Shape	Width	Station	Northing	Easting	Rim Elevation	Invert In		Invert Out		Additional Depth
		(ft)				(ft)	(ft)		(ft)		(ft)
SSMH1	Circular	5	10+63.25	422063.74	2603595.68	655.24	(NE)	647.00	(SW) (EX)	646.09	3.2
							(NW) (EX)	646.34			
							(NW) (EX)	648.99			
							(SE) (EX)	649.94			
							(SE) (EX)	646.54			
SSMH2	Circular	4	12+02.09	422145.81	2603707.67	657.20	(E)	648.58	(SW)	648.48	2.8
SSMH3	Circular	4	12+77.62	422139.21	2603782.91	657.57	(E)	649.00	(W)	648.90	2.7
SSMH4	Circular	4	15+15.93	422143.96	2604057.18	662.18	(E) (EX)	654.28	(W)	650.35	5.9
							(S)	650.45			
SSMH5	Circular	4	17+63.65	421934.82	2604090.13	661.32	(E)	651.59	(N)	651.49	3.9
							(S) (EX)	655.23			
SSMH6	Circular	4	19+84.67	421938.87	2604311.11	663.80	(E)	652.99	(W)	652.68	5.2
			50+23.48				(S)	652.78			
SSMH7	Circular	4	21+21.52	421941.58	2604447.94	666.10	(N) (EX)	658.84	(W)	654.05	6.1
							(S)	654.15			
SSMH8	Circular	4	21+67.56	421895.55	2604448.79	665.97	(E)	654.62	(N)	654.52	5.5
SSMH9	Circular	4	22+96.01	421896.52	2604577.25	668.63	(E)	655.29	(W)	655.19	7.5
SSMH10	Circular	4	23+60.85	421874.97	2604638.39	669.43	(E) (EX)	662.62	(W)	655.57	7.9
							(S)	655.67			
SSMH11	Circular	4	24+33.86	421802.78	2604627.39	667.51	(S)	656.09	(N)	656.09	
SSMH12	Circular	4	25+79.83	421666.05	2604576.3	665.82	(S)	656.66	(N)	656.66	3.2
							(W) (EX)	657.60			
SSMH13	Circular	4	26+68.05	421581.98	2604603.04	665.28	(E) (EX)	657.07	(N)	657.00	2.3
							(S)	657.31			
SSMH14	Circular	4	28+08.18	421448.41	2604645.4	665.17			(N)	657.85	1.4
SSMH15	Circular	4	53+15.85	421646.58	2604317.96	662.18	(W)	654.13	(N)	653.98	2.2
SSMH16	Circular	4	53+46.64	421640.19	2604287.84	661.93	(S)	654.24	(E)	654.24	1.7
SSMH17	Circular	4	55+64.17	421427.4	2604333.03	663.65			(N)	655.09	2.6

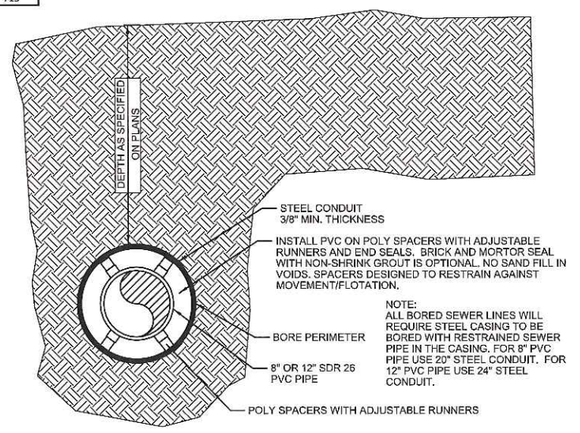

BORED CROSSING DETAIL
N.T.S.

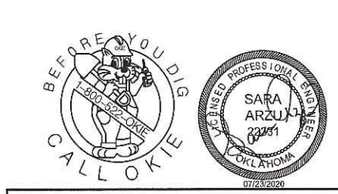

SANITARY SEWER PAY ITEMS AND NOTES

PROJECT NO ES. 2019-08

NON-ARTERIAL STREET MZ 6028-W

CITY OF TULSA, OKLAHOMA
ENGINEERING SERVICES DEPARTMENT

PLANS AND ESTIMATES PREPARED BY:
CIVIL/ENVIRONMENTAL ENGINEERING
8179 EAST. 41ST STREET.
TULSA, OKLAHOMA 74145
PHONE:(918)749-5800 FAX:(918)749-5858
C.A. NO.: 1371 - EXPIRES: 6/30/22

REVISION	BY	DATE

PLAN SCALE: N/A	DRAWN	SL	7/20	APPROVED:
	DESIGNED	SA	7/20	
	SURVEY	AB	8/18	
PROFILE SCALE	PROJ. MNGR.			
HORIZONTAL: N/A	LEAD ENGR.			
	FIELD MNGR.			
VERTICAL: N/A	RECOMMENDED:			
	DEPUTY DIRECTOR			CITY ENGINEER
FILE: 2018-53-055-01\DESIGN\SHTS\QUANT_NOTES				DATE 07/2020
ATLAS PAGE NO. 235				SHEET 16 OF 161 SHEETS

PAY ITEM NOTES

RIGHT-OF-WAY CLEARING AND RESTORATION

1. RIGHT-OF-WAY CLEARING WILL BE PAID FOR AT THE UNIT BID PRICE, ON A SQUARE YARD BASIS, FOR OPEN CUT CONSTRUCTION. NO ADDITIONAL PAYMENT WILL BE MADE FOR TRENCHLESS CONSTRUCTION.

2. ANY ITEMS REMOVED AS PART OF THIS PROJECT SHALL BE RESTORED TO EQUAL OR BETTER CONDITION. PAYMENT WILL BE INCLUDED IN THE BID PRICE FOR RIGHT-OF-WAY CLEARING AND RESTORATION.

3. THE COST OF ANY TEMPORARY FENCING FOR LIVESTOCK OR PETS IS PART OF AND INCLUDED IN RIGHT-OF-WAY CLEARING AND RESTORATION.

4. ALL COSTS ASSOCIATED WITH THE REMOVALS SHALL BE INCLUDED IN THE UNIT PRICE FOR RIGHT-OF-WAY CLEARING AND RESTORATION. THIS INCLUDES, BUT IS NOT LIMITED TO, STRUCTURES, TREES, BUSHES, FENCES, AND OTHER ITEMS AS MAY BE ENCOUNTERED.

5. UNLESS NOTED FOR SALVAGE, ALL ITEMS REMOVED SHALL BE REMOVED AS PART OF THE UNIT PRICE BID FOR RIGHT-OF-WAY CLEARING AND RESTORATION. ITEMS SCHEDULED FOR SALVAGE SHALL BE RETURNED TO A SITE DESIGNATED BY THE CITY. CASTING AND LIDS ON ALL SANITARY AND STORM SEWERS SHALL BE REPLACED WITH NEW ONES AND THE OLD LIDS AND CASTINGS SHALL BE RETURNED TO THE SEWER BASE AT 9319 E. 42ND STREET NORTH AND PLACED IN THE METAL RECYCLE BINS IN THE STOCKROOM AREA, PHONE: (918) 669-6130, BETWEEN THE HOURS OF 7:30 A.M. AND 3:00 P.M., MONDAY THROUGH FRIDAY. MATERIALS NOT SALVAGED SHALL BE DISPOSED OF BY THE CONTRACTOR IN A MANNER ACCEPTABLE TO THE CITY AND THE ENGINEER AT NO COST TO THE PROJECT.

6. AS PART OF THE UNIT BID PRICE FOR RIGHT-OF-WAY CLEARING AND RESTORATION, THE CONTRACTOR SHALL REPAIR OR REPLACE, ANY PRIVATE UTILITIES DISTURBED. THIS INCLUDES, BUT IS NOT LIMITED TO, IRRIGATION, YARD LIGHTING, EITHER GAS OR ELECTRIC, AND PET CONFINEMENT SYSTEMS. NO ADDITIONAL COMPENSATION WILL BE MADE FOR THIS WORK.

7. NOT USED

8. NOT USED

8A. NOT USED

EROSION CONTROL

9. ALL COSTS ASSOCIATED WITH THE COST OF IMPLEMENTING, MAINTAINING, AND MODIFYING THE EROSION CONTROL MEASURES SHALL BE INCLUDED IN THE UNIT BID PRICE FOR EACH EROSION CONTROL MEASURE.

10. THIS INCLUDES, BUT IS NOT LIMITED TO, ALL SOIL STABILIZATION PRACTICES, STRUCTURAL MEASURES, ON/ OFF SITE VEHICLE CONTROL MEASURES TO PROPERLY ADHERE TO THE APPROVED STORMWATER POLLUTION PREVENTION PLAN. SILTATION CONTROL MEASURES, SUCH AS SEDIMENT FILTERS, SHALL BE PLACED AROUND STRUCTURES AND CREEKS TO PREVENT EROSION OR THE DEPOSITION OF ERODED MATERIAL ON ADJACENT PROPERTY.

11. SHOULD THE CONTRACTOR ELECT TO DEVELOP HIS OWN SWP3, THIS PLAN SHALL BE DEVELOPED AND SEALED BY A PROFESSIONAL ENGINEER REGISTERED IN THE STATE OF OKLAHOMA. COST FOR THIS ALTERNATIVE PLAN WILL BE CONSIDERED AS INCIDENTAL TO THE IMPLEMENTATION OF THE EROSION CONTROL MEASURES.

12. EROSION PROTECTION SHALL BE PLACED AROUND DRAINAGE INLETS AS REQUIRED TO PREVENT ENTRANCE OF EROSION MATERIAL. EROSION PROTECTION SHALL BE PLACED AS NECESSARY TO PREVENT EROSION WASH TO ADJACENT PROPERTY. ALL EROSION PROTECTION INSTALLED MUST BE MAINTAINED BY THE CONTRACTOR FOR DURATION OF THE PROJECT. EROSION PROTECTION SHALL BE REMOVED AT THE END OF THE PROJECT AS DIRECTED BY THE ENGINEER, COST TO BE INCLUDED IN THE PRICE BID. THE PRICE INCLUDES THE COST OF SEDIMENT REMOVAL PER THE STORMWATER MANAGEMENT PLAN.

EXCAVATION

13. THE CONTRACTOR SHALL INCLUDE THE COST OF RELOCATING UTILITY POLE ANCHORS, AND ANY BRACING OF POLES THAT MAY BE REQUIRED BY THE APPROPRIATE UTILITY COMPANY. THE CONTRACTOR SHALL CONTACT AND COORDINATE WITH THE APPROPRIATE UTILITY COMPANY. ALL WORK ASSOCIATED WITH THE MAINTENANCE OF OTHER UTILITIES, FACILITIES AND LINES IS CONSIDERED AS WORK INCIDENTAL TO EXCAVATION AND BACKFILL, UNCLASSIFIED AND AS SUCH, WILL NOT BE MEASURED FOR SEPARATE PAYMENT.

14. THE CONTRACTOR SHALL EXCAVATE ALL BURIED UTILITY CROSSINGS AHEAD OF PIPE LAYING OR THE INSTALLATION OF SHEETING OR SHORING TO AVOID UTILITY CONFLICTS. ALL COSTS ASSOCIATED WITH THIS WORK IS CONSIDERED INCIDENTAL TO EXCAVATION AND BACKFILL UNCLASSIFIED.

15. WATER TABLE CRADLE SHALL BE INSTALLED WHERE TRENCH CONDITIONS WARRANT ITS USE AS DIRECTED BY THE ENGINEER.

SODDING & SEEDING

16. THE PAYMENT OF THE UNIT BID PRICE FOR SOLID SLAB SODDING SHALL INCLUDE ALL COSTS FOR PLACEMENT OF THE TOPSOIL AND SOD, FERTILIZATION, AND PERIODIC WATERING. FERTILIZATION SHALL BE ACCOMPLISHED USING 10-20-10 FERTILIZER APPLIED AT A RATE OF 1.5 POUNDS PER SQUARE YARD. WATERING SHALL BE AS NEEDED AND SHALL CONTINUE UNTIL THE VEGETATION IS FULLY ESTABLISHED OR THE PROJECT HAS BEEN ACCEPTED BY THE OWNER.

17. WATERING AND FERTILIZATION FOR HYDROMULCH SEEDING SHALL BE IN ACCORDANCE WITH CITY STANDARDS AND SPECIFICATION PART 325. PAYMENT FOR SOD REPLACEMENT OR HYDROMULCH SEEDING WILL BE MADE AT THE UNIT PRICE PER SQUARE YARD AND SHALL INCLUDE ALL NECESSARY TOP SOIL REPLACEMENT, FERTILIZATION, WATERING AND MAINTENANCE. PAY LIMIT WIDTH SHALL BE STANDARD TRENCH WIDTH. NO SEPARATE ADDITIONAL PAYMENT SHALL BE MADE FOR SODDING AND SEEDING OUTSIDE OF PAY LIMIT. MAXIMUM PAY LIMIT FOR SEEDING AND SODDING SHALL BE STANDARD TRENCH WIDTH PLUS 2 FEET EACH SIDE OF TRENCH. DEVELOPED LOTS SHALL BE SOD AND UNDEVELOPED LOT MAY BE HYDROMULCH SEEDED.

PAVEMENT

18. ALL STEEL DOWELING AND REINFORCING STEEL REQUIRED FOR THE REPLACEMENT OF CURB AND GUTTERS OR CONCRETE PAVEMENT SHALL BE INCLUDED IN THE UNIT BID PRICE FOR THE REMOVAL AND REPLACEMENT OF THE ITEM. IN THE EVENT THERE IS NO ASSOCIATED BID PRICE, THE WORK IS INCIDENTAL.

19. PAVEMENT REPLACEMENT AT RECEIVING AND JACKING PITS LOCATED IN THE STREET SHALL BE DONE IN ACCORDANCE WITH THE CITY OF TULSA'S REQUIREMENTS FOR PATCHING RESIDENTIAL STREETS. PAVEMENT REPLACEMENT AT THE JACKING AND RECEIVING PITS SHALL BE CONSIDERED AS INCIDENTAL WORK AND SHALL BE INCLUDED IN THE UNIT BID PRICE FOR BORED STEEL CASING AND/OR PIPE BURSTING.

20. ALL TRENCHES LOCATED UNDER STREET PAVEMENT AND AREAS UNDER FULL CONCRETE PANEL REPLACEMENT SHALL BE FILLED WITH GRANULAR MATERIAL MEETING THE GRADATION REQUIREMENTS FOR TYPE "A" AGGREGATE BASE, PLACED IN MAXIMUM 8" LIFTS AND COMPACTED TO 95% STANDARD PROCTOR DENSITY, PRIME COAT, PAVEMENT RE-STRIPING AND SUBGRADE PREPARATION SHALL ALSO BE INCLUDED IN THE UNIT BID PRICE FOR THE REMOVAL AND REPLACEMENT OF THE ITEM. NO SEPARATE PAYMENT SHALL BE MADE.

MANHOLES

21. ALL NEW CONCRETE MANHOLES 5 FOOT IN DIAMETER AND LARGER, SHALL HAVE CORROSION PROTECTION INSTALLED PER SP-1. THE COST OF THIS ITEM SHALL BE INCLUDED IN THE UNIT PRICE BID FOR THE MANHOLE.

22. MANHOLES WILL BE MEASURED FOR PAYMENT USING THE CITY OF TULSA'S STANDARD PAY ITEMS.

23. NO TRANSITIONS BETWEEN PIPE TYPES OR SIZES MAY BE MADE EXCEPT AT A STRUCTURE. IF A TRANSITION IS REQUIRED AT A LOCATION OTHER THAN ONE SCHEDULED FOR THE INSTALLATION OF A MANHOLE, THE CONTRACTOR WILL INSTALL AN ADDITIONAL MANHOLE AT HIS COST.

24. ALL OVERSIZED MANHOLE FRAMES AND COVERS SHALL BE EAST JORDAN 2230 SERIES OR ENGINEER APPROVED EQUAL FRAMES AND COVERS SHALL MEET THE REQUIREMENTS OF CITY OF TULSA STANDARD DETAIL NO. 354. THE COST SHALL BE INCLUDED IN THE UNIT PRICE BID FOR THE MANHOLE.

25. ALL SAW CUTTING AND REMOVAL SHALL BE INCLUDED IN THE COST OF ITEM TO BE ADJUSTED, REMOVED, REPAIRED, OR REPLACED. THIS ITEM SHALL INCLUDE THE COST OF NEW MANHOLE FRAME AND COVER PER CITY OF TULSA STANDARD NOS. 752, 753 AND 754. THE TOTAL COST FOR RUBBERIZED ASPHALT AND/OR SILICONE AT MANHOLES, VALVES BOXES, INLETS, AND APRONS, SHALL BE INCLUDED. NO MASONRY STRUCTURES SHALL BE CONSTRUCTED WITH IN THE RIGHT-OF-WAY.

PIPE

26. THE CONTRACTOR MAY UTILIZE EITHER CLASS 50 DUCTILE IRON PIPE OR CENTRIFUGALLY CAST FIBERGLASS REINFORCED POLYMER MORTAR PIPE (CCFRPM) UNLESS OTHERWISE NOTED IN DRAWINGS.

27. WHEN UTILIZING CCFRPM PIPE, SN 46 PIPE MAY BE INSTALLED IN NON-PAVED AREAS OUTSIDE OF EXISTING STREET RIGHT-OF-WAY FOR DEPTH OF COVER LESS THAN OR EQUAL TO 15 FEET. BEDDING AND BURIAL OF CCFRPM PIPE AND FITTINGS IN NON-PAVED AREAS OUTSIDE OF STREET RIGHT-OF-WAY SHALL BE IN ACCORDANCE WITH BEDDING DETAIL ON SHEET 31 ALONG WITH SP-2 SPECIFICATIONS.

28. WHEN UTILIZING CCFRPM PIPE, SN 72 PIPE MUST BE INSTALLED WITHIN EXISTING STREET RIGHT-OF-WAY AND UNDER PAVED AREAS OUTSIDE OF RIGHT-OF-WAY. PAVEMENT REMOVAL AND RESTORATION AND BEDDING SHALL BE IN ACCORDANCE WITH CITY OF TULSA STANDARD DETAIL NO. 713.

29. WHEN UTILIZING CCFRPM PIPE, FRP WATERTIGHT MANHOLES, AS MANUFACTURED BY L.F. MANUFACTURING, INC., OR ENGINEER APPROVED EQUIVALENT, SHALL BE INSTALLED. FRP MANHOLES SHALL BE SUITABLE FOR HS-20 LOADING. AN ANTI-FLOTATION RING WITH AN EXTENDED, REINFORCED CONCRETE BASE SHALL ALSO BE REQUIRED. EXTENDED BASES SHALL BE A MINIMUM OF 12 INCHES THICK WITH A MINIMUM DIAMETER OF 24 INCHES GREATER THAN MANHOLE OUTSIDE DIAMETER. A PRE-CONSTRUCTION SUBMITTAL, COMPLETE WITH BUOYANCY CALCULATIONS, TO ENGINEER SHALL BE REQUIRED. SEE TECHNICAL SPECIFICATIONS AND DETAIL ON SHEET 32 FOR ADDITIONAL REQUIREMENTS. PRE-CAST CONCRETE MANHOLES WILL BE ALLOWED FOR DI PIPE INSTALLATION AS PER STANDARD SPECIFICATIONS.

30. REINFORCED CONCRETE PIPE TO BE CLASS III. ALL REINFORCED CONCRETE PIPE AND MANHOLES TO BE SUPPLIED WITH OMNI-FLEX JOINT GASKET OR APPROVED EQUAL. MASTIC JOINT SEALANT SHALL NOT BE ALLOWED.

ABANDONMENT OF SEWERS

31. MANHOLES SHALL HAVE THE TOP 3 FEET REMOVED. MANHOLES AND SANITARY SEWERS SHALL BE FILLED WITH SAND, CELLULAR CONCRETE, OR FLOWABLE FILL.

32. ABANDONMENT SHALL BE PERFORMED AFTER CONSTRUCTION OF ALL NEW SANITARY SEWER MAINS.

33. CONTRACTOR SHALL CCTV (CLOSED CIRCUIT TELEVISION INSPECTION) ALL SEWER LINES PRIOR TO ALL ABANDONMENT TO DETERMINE LOCATION OF EXISTING SERVICE CONNECTIONS. SERVICE CONNECTIONS SHALL BE RECONNECTED TO PROPOSED SANITARY SEWER LOCATED IN THE IMMEDIATE VICINITY OF THE ABANDONED LINE. ENGINEER SHALL BE NOTIFIED IMMEDIATELY IF THERE IS NO PROPOSED SEWER TO COLLECT THE SERVICE.

SEWER SERVICES

34. PAYMENT FOR THE INSTALLATION OF SEWER SERVICES SHALL BE ON A LINEAR FOOT BASIS FOR THE TYPE OF PIPE SPECIFIED. PAYMENT SHALL INCLUDE EXCAVATION/BACKFILL, PIPE, FITTINGS, SURFACE RESTORATION, AND ALL OTHER ITEMS ASSOCIATED WITH THE INSTALLATION OF THE SEWER SERVICE. ALL 4 INCH SEWER LATERALS SHALL BE INSTALLED AT A MIN. SLOPE OF 2%. SEWER SERVICE CONNECTIONS TO THE MAIN LINE WILL BE PAID PER EACH IN A SEPARATE PAY ITEM.

35. EACH INSTALLED SERVICE CONNECTION SHALL BE SHOWN AND STATIONED ON CONTRACTOR'S RED LINE DRAWING SUBMITTAL TO ENGINEER ACCOMPANIED WITH NEAREST HOUSE ADDRESS FOR RECORD DRAWING PREPARATION.

36. COST OF BYPASS FLOW SHALL BE INCLUDED IN REMOVAL OF EXISTING PIPE.

ITEM NO.	SPEC. NO.	ITEM DESCRIPTION	PAY ITEM NOTE	BID UNIT	QUANTITY
153	SPECIAL	PHOTOGRAPHIC DOCUMENTATION		EA	1
154	205(A)	TYPE A SALVAGE TOPSOIL		CY	124
155	221(C)	TEMPORARY SILT FENCE	9,10,11,12	LF	500
156	221(D)	TEMPORARY SEDIMENT FILTER	9,10,11,121	LF	100
157	230(A)	SOD REPLACEMENT	16,17	SY	743
158	301	CLEARING AND GRUBBING	1,2,3,4,5,6	ACRE	0.20
159	302	UNCLASSIFIED EXCAVATION & BACKFILL	13,14,15,20,34	CY	2509
160	303(A)	AGGREGATE BASE TYPE-A		CY	207
161	313	8" PVC SEWER PIPE SDR-26 (TRENCH)	26,27,28,29,30,31,36	LF	612
162	313	8" PVC SEWER PIPE SDR-26 (BORE)	26,27,28,29,30,31,36	LF	319
163	313	12" PVC SEWER PIPE SDR-26 (TRENCH)	26,27,28,29,30,31,36	LF	1083
164	313	12" PVC SEWER PIPE SDR-26 (BORE)	26,27,28,29,30,31,36	LF	178
165	314	4' MANHOLE	21,22,23,24,25	EA	16
166	314	5' MANHOLE	21,22,23,24,25	EA	1
167	315	SERVICE CONNECTION	34,35	EA	35
168	329	PAVEMENT REMOVAL	18,19,20	SY	116
169	332	20" STEEL CONDUIT (BORE)			502
170	332	24" STEEL CONDUIT (BORE)			120
171	404	PLUG SANITARY SEWER MANHOLE	31,32,33	EA	1
172	609(B)	2'-2" COMBINED CURB AND GUTTER (6" BARRIER)	18	LF	14
173	610(A)	4" CONCRETE SIDEWALK	18	SY	12
174	611(B)	ADDITIONAL DEPTH MANHOLE (4' ID)		VF	61.3
175	611(B)	ADDITIONAL DEPTH MANHOLE (5' ID)		VF	3.1
176	619(B)	REMOVAL OF CURB AND GUTTER	25	LF	14
177	619(B)	REMOVAL OF SIDEWALK	25	SY	12
178	619(B)	REMOVAL OF EXISTING MH STRUCTURES	25	EA	17
179	619(B)	REMOVAL OF EXISTING PIPE	25,36	LF	2227.0
180	619(B)	REMOVE STRUCTURES AND OBSTRUCTIONS		LSUM	1
181	619(B)	REMOVE AND REPLACE EXIST FENCE		LF	227
182	SPECIAL	AC PAVEMENT RECONSTRUCTION (AC PATCH)	18,19,20	SY	52

BEFORE YOU DIG CALL OKIE 1-800-522-OKIE

LICENSED PROFESSIONAL ENGINEER SARA ARZU 23231 OKLAHOMA 07/23/2020

SANITARY SEWER PAY ITEMS AND NOTES

PROJECT NO ES. 2019-08

NON-ARTERIAL STREET MZ 6028-W

CITY OF TULSA, OKLAHOMA
ENGINEERING SERVICES DEPARTMENT

PLANS AND ESTIMATES PREPARED BY:

CIVIL/ENVIRONMENTAL ENGINEERING
8179 EAST. 41ST STREET.
TULSA, OKLAHOMA 74145
PHONE:(918)749-5800 FAX:(918)749-5858
C.A. NO.: 1371 - EXPIRES: 6/30/22

REVISION	BY	DATE

PLAN SCALE: N/A	DRAWN	SL	7/20	APPROVED:
	DESIGNED	SA	7/20	
	SURVEY	AB	8/18	
PROFILE SCALE	PROJ. MNGR.			
HORIZONTAL: N/A	LEAD ENGR.			
	FIELD MNGR.			
VERTICAL: N/A	RECOMMENDED: DEPUTY DIRECTOR			CITY ENGINEER
FILE: 2018-53-055-01\DESIGN\SHTS\QUANT_NOTES				DATE 07/2020
ATLAS PAGE NO. 235				SHEET 16 OF 161 SHEETS

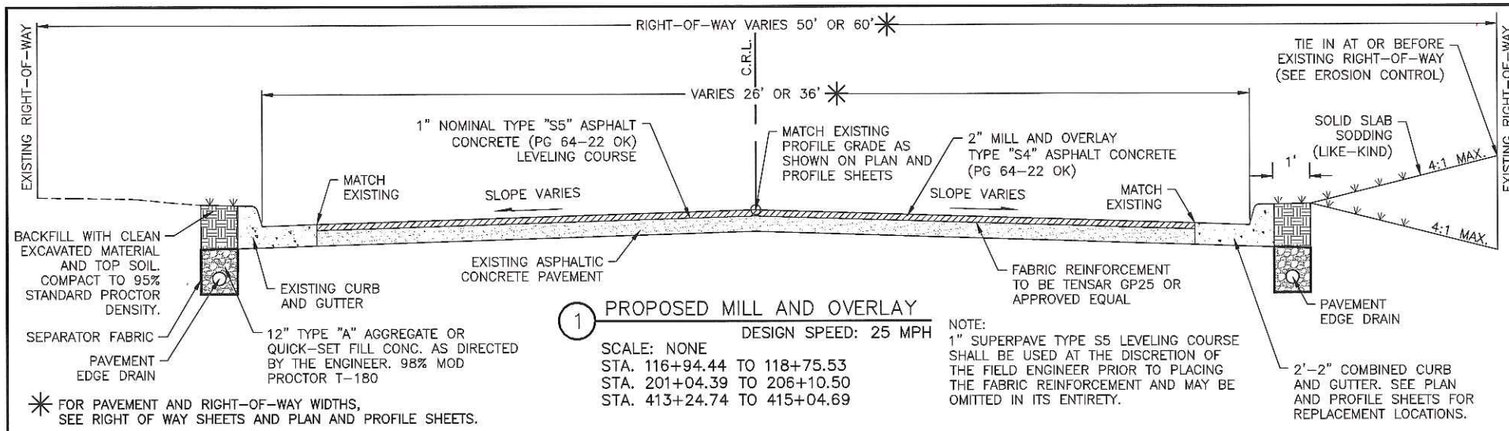

✳ FOR PAVEMENT AND RIGHT-OF-WAY WIDTHS, SEE RIGHT OF WAY SHEETS AND PLAN AND PROFILE SHEETS.

1 PROPOSED MILL AND OVERLAY

DESIGN SPEED: 25 MPH

SCALE: NONE

STA. 116+94.44 TO 118+75.53
STA. 201+04.39 TO 206+10.50
STA. 413+24.74 TO 415+04.69

NOTE:
1" SUPERPAVE TYPE S5 LEVELING COURSE SHALL BE USED AT THE DISCRETION OF THE FIELD ENGINEER PRIOR TO PLACING THE FABRIC REINFORCEMENT AND MAY BE OMITTED IN ITS ENTIRETY.

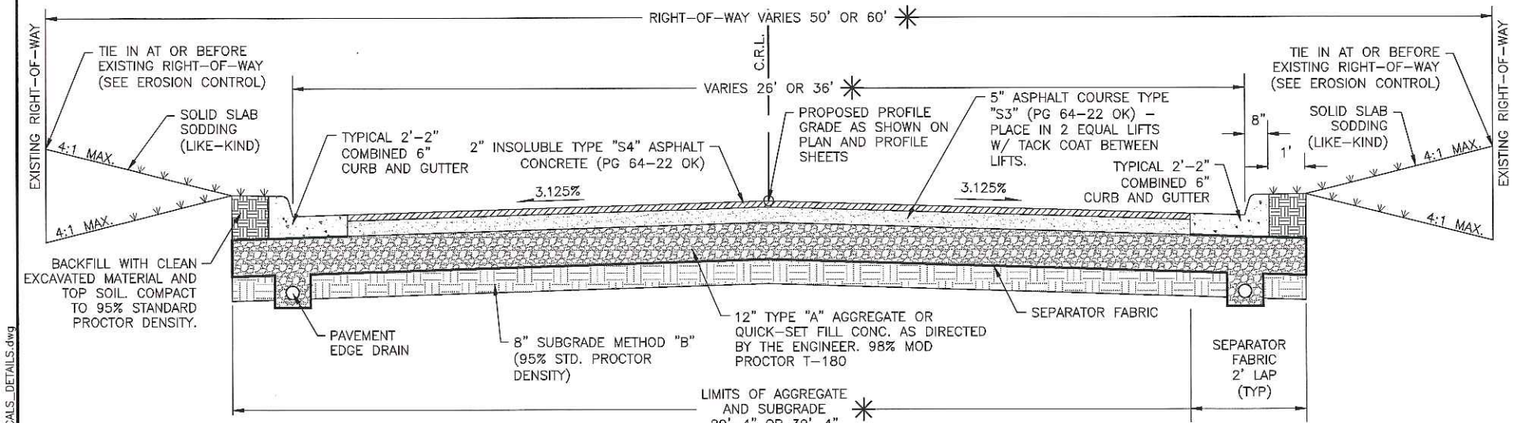

2 PROPOSED AC RECONST. W/ CURB AND GUTTER

DESIGN SPEED: 25 MPH

✳ FOR PAVEMENT AND RIGHT-OF-WAY WIDTHS, SEE RIGHT OF WAY SHEETS AND PLAN AND PROFILE SHEETS.

SCALE: NONE

STA. 111+86.64 TO 116+94.44
STA. 200+16.65 TO 201+04.39
STA. 300+16.50 TO 302+29.69
STA. 400+16.50 TO 413+24.74
STA. 415+04.69 TO 415+59.27

NOTE:
1" SUPERPAVE TYPE S5 LEVELING COURSE SHALL BE USED AT THE DISCRETION OF THE FIELD ENGINEER PRIOR TO PLACING THE FABRIC REINFORCEMENT AND MAY BE OMITTED IN ITS ENTIRETY.

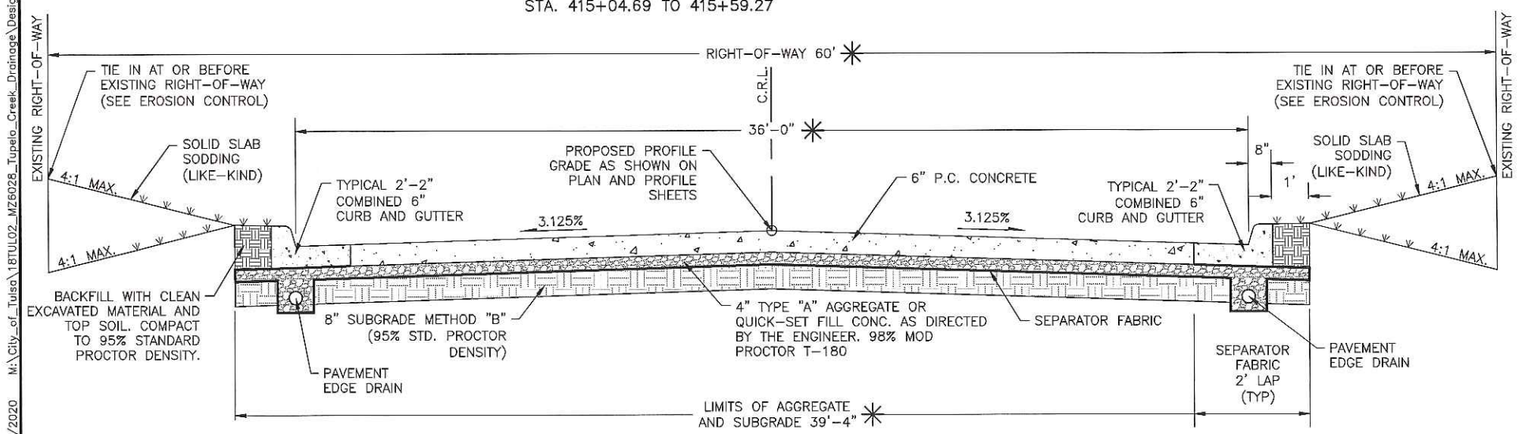

3 PROPOSED PCC RECONST. W/ CURB AND GUTTER

DESIGN SPEED: 25 MPH

✳ FOR PAVEMENT AND RIGHT-OF-WAY WIDTHS, SEE RIGHT OF WAY SHEETS AND PLAN AND PROFILE SHEETS.

SCALE: NONE

STA. 111+45.55 TO 111+86.64

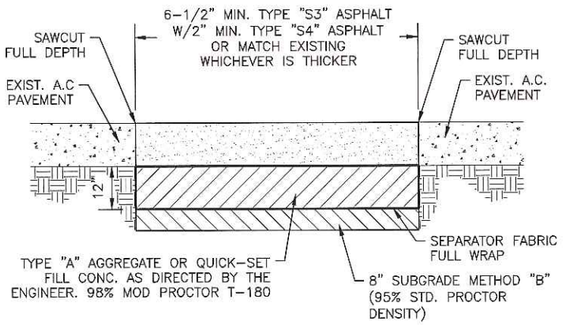

NOTE:
TYPE "S4" ASPHALT TO BE PAID FOR SEPARATELY. COST TO BE INCLUDED IN SUPERPAVE, TYPE S4 (PG 64-22 OK).
ITEMS ALSO TO BE PAID FOR SEPARATELY:
A. UNCLASSIFIED EXCAVATION (CY)
B. SUBGRADE METHOD "B" (SY)
C. SEPARATOR FABRIC (SY)
D. AGGREGATE BASE (TYPE A) (CY)

4 TYPE I AC PATCH NON-ARTERIAL

SCALE: NONE

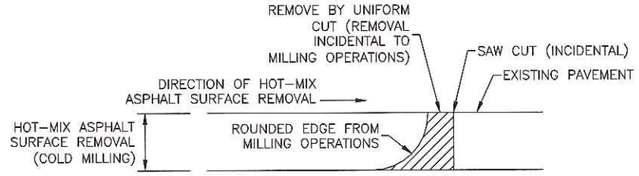

5 ASPHALT BUTT JOINT

SCALE: NONE

NOTE:
WHEN MILLING OPERATIONS PRODUCE A ROUNDED EDGE. THEN A SAW CUT SHALL BE USED TO MANUFACTURE A PERPENDICULAR EDGE AS SHOWN IN THE DETAIL. THE ENGINEER SHALL BE THE SOLE JUDGE CONCERNING THE USE OF THIS DETAIL. COST TO BE INCLUDED IN OTHER ITEMS OF WORK.

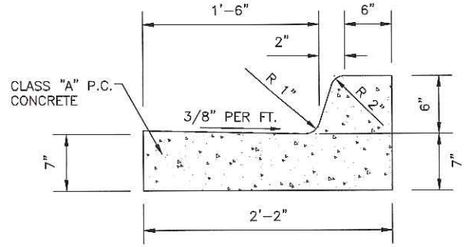

6 COMBINED CURB & GUTTER

SCALE: NONE

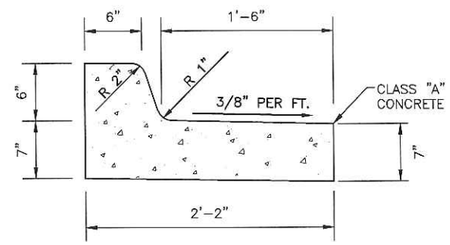

7 FALLAWAY CURB AND GUTTER

SCALE: NONE

LICENSED PROFESSIONAL ENGINEER
BENJAMIN W. FLETCHER
24921
OKLAHOMA

8/7/2020

TYPICAL SECTIONS

PROJECT #144628-W, TMUA-W 18-16

MAINTENANCE ZONE 6028-W
TUPELO CREEK DRAINAGE

CITY OF TULSA, OKLAHOMA
ENGINEERING SERVICES DEPARTMENT

PLANS AND ESTIMATES PREPARED BY:
Meshek & Associates, L.L.C.
1437 S. Boulder Avenue, Suite 1550 Tulsa, OK 74119 (918)392-5620

REVISION	BY	DATE

PLAN SCALE: N/A	DRAWN	SCB	08/20
	DESIGNED	BWF	08/20
	SURVEY	AB	08/18
PROFILE SCALE:	PROJ. MGR.		
HORIZONTAL: N/A	LEAD ENGR.		
	FIELD MGR.		
VERTICAL: N/A	RECOMMENDED DESIGN MANAGER		
FILE:	DRAWING:		
ATLAS PAGE NO. 235			

APPROVED:

CITY ENGINEER

DATE:

SHEET 17 OF 181 SHEETS

PRINT DATE: 08/07/2020 M:\City_of_Tulsa\18TUL02_MZ6028_Tupelo_Creek_Drainage\Design\Drawings\18TUL02_TYPICALS_DETAILS.dwg

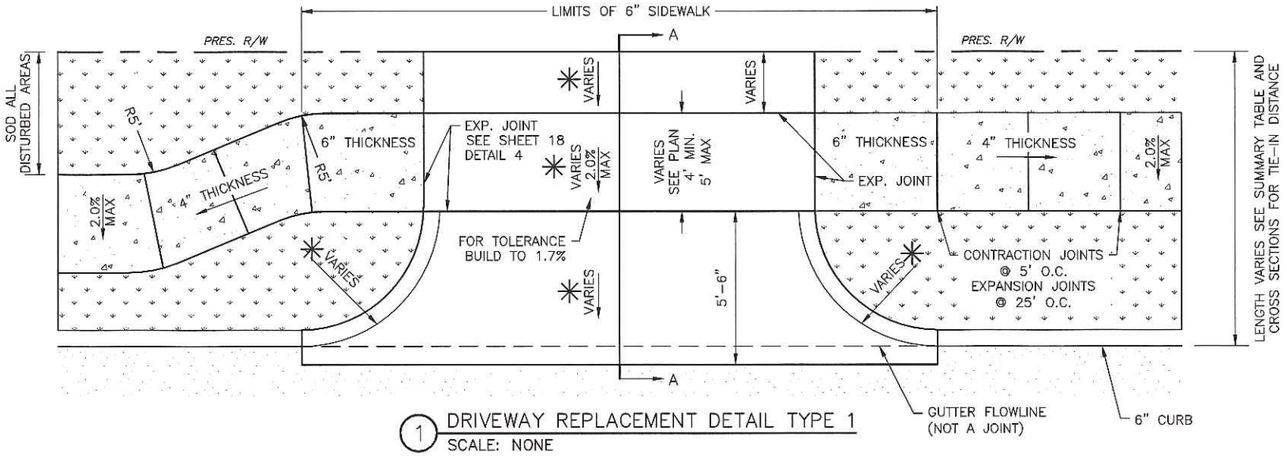

1 DRIVEWAY REPLACEMENT DETAIL TYPE 1

SCALE: NONE

NOTE: SAWCUT DRIVEWAY AT CENTER FOR WIDTHS GREATER THAN 15'.

✳ SEE SUMMARY TABLES AND CROSS SECTIONS FOR PROPOSED DRIVEWAY GRADES AND RADII.

TYPICAL RADII = 5' FOR RESIDENTIAL
= 15' FOR COMMERCIAL

LEGEND

PR. SIDEWALK

SOD

SECTION A–A
TYPICAL DRIVEWAY PROFILE (TYPE 1)

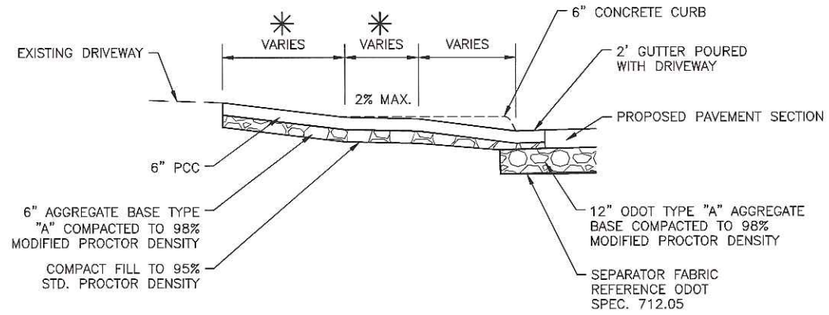

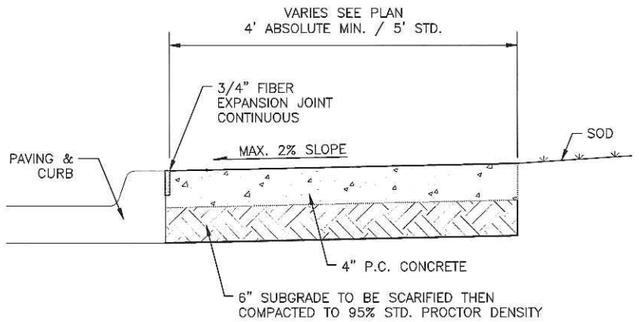

2 P.C. CONCRETE SIDEWALK BEHIND CURB

SCALE: NONE

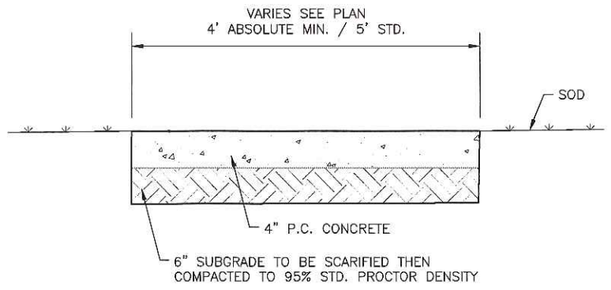

3 P.C. CONCRETE SIDEWALK

SCALE: NONE

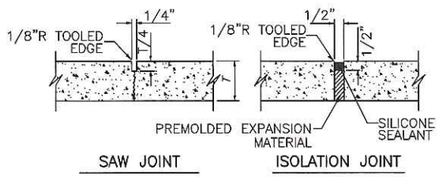

4 SIDEWALK JOINT DETAIL

SCALE: NONE

SIDEWALK NOTES:

1. SPACE CONTROL JOINTS UNIFORMLY WITH MINIMUM INTERVALS EQUAL TO THE WALK WIDTH AND MAXIMUM INTERVALS OF 1.25
2. PLACE PREMOLDED EXPANSION JOINT MATERIAL AROUND ALL STRUCTURES IN THE NEW WALK AND BETWEEN ALL BUILDINGS, CURBS AND STRUCTURES ABUTTING THE NEW SIDEWALK.
3. 1/2" EXPANSION JOINTS SHALL BE INSTALLED WHERE PROPOSED TIMES THE WALK WIDTH.
4. SEAL EXPANSION JOINTS WITH AN APPROVED SILICONE SEALANT. MEETS EXISTING SIDEWALK.



DETAILS

PROJECT #144628–W, TMUA–W 18–16

MAINTENANCE ZONE 6028–W
TUPELO CREEK DRAINAGE

CITY OF TULSA, OKLAHOMA
ENGINEERING SERVICES DEPARTMENT

PLANS AND ESTIMATES PREPARED BY:
Meshek & Associates, L.L.C.
1437 S. Boulder Avenue, Suite 1550 Tulsa, OK 74119 (918)392–5620

REVISION	BY	DATE

PLAN SCALE: N/A
PROFILE SCALE: HORIZONTAL: N/A VERTICAL: N/A

DRAWN	SCB	08/20
DESIGNED	BWF	08/20
SURVEY	AB	08/18
PROJ. MGR.		
LEAD ENGR.		
FIELD MGR.		
RECOMMENDED DESIGN MANAGER		

APPROVED:

CITY ENGINEER

FILE: DRAWING: DATE:

ATLAS PAGE NO. 235

SHEET 18 OF 161 SHEETS

PRINT DATE: 08/07/2020 M:\City_of_Tulsa\18TUL02_MZ6028_Tupelo_Creek_Drainage\Design\Drawings\18TUL02_TYPICALS_DETAILS.dwg

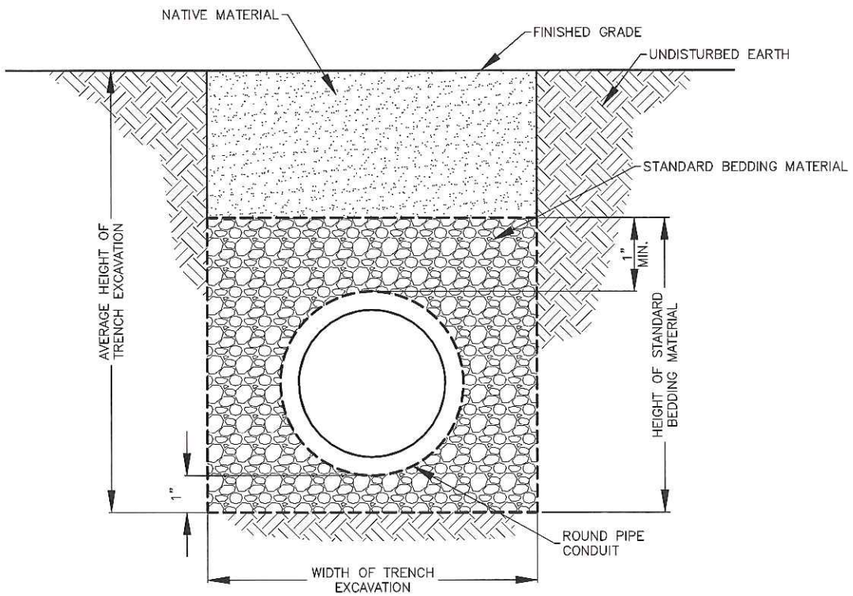

LIMITS OF STANDARD BEDDING MATERIAL. QUANTITIES FOR BEDDING MATERIAL DO NOT INCLUDE THE SPACE WITHIN AND BOUNDED BY THE OUTER SURFACE OF THE PIPE CONDUIT.

NOTE:
STANDARD BEDDING MATERIAL MUST BE ODOT TYPE "A" AGGREGATE BASE. UNDER PAVING, TYPE "A" AGGREGATE BASE MUST BE TO THE TOP OF THE TRENCH. TYPE "A" AGGREGATE BASE TO BE COMPACTED TO 95% STANDARD PROCTOR DENSITY.

PIPE SIZE, IN.	TRENCH WIDTH, FT.
ID < 24"	OD + 2'
24" > ID < 36"	OD + 2.5'
24" > ID < 36"	OD + 3.5'
ID CL 60"	OD + 2' EACH SIDE OF PIPE

1 STORMWATER PIPE BEDDING DETAIL
SCALE: NONE

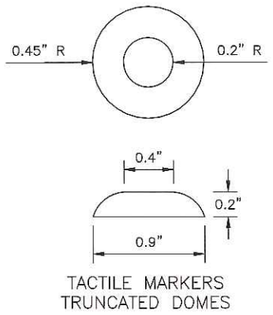

TACTILE MARKERS
TRUNCATED DOMES

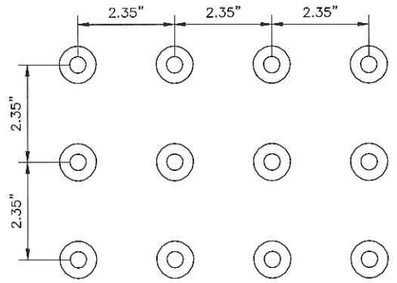

2 TACTILE DOME DETAIL
SCALE: NONE

INSTALLATION NOTES

THE TRUNCATED DOME SURFACE SHALL CONTRAST VISUALLY WITH THE ADJOINING WALKING SURFACES.

THE TRUNCATED DOMES SHALL BE:

–PRE–CAST CONCRETE PANELS WITH A NOMINAL THICKNESS OF 7/8 INCH TO 2 INCHES, AND A MINIMUM SIZE OF 12" X 16", THEY SHALL BE CONSTRUCTED WITH A MINIMUM OF 4000 PSI CONCRETE. THEY SHALL BE YELLOW IN COLOR AND MEET ALL ADA REQUIREMENTS FOR COLOR CONTRAST AND DIMENSIONS

OR

–FLANGED CAST IN PLACE GLASS AND CARBON REINFORCED COMPOSITE PANEL AS MANUFACTURED BY ADA SOLUTIONS

OR

–DUCTILE IRON

OR

– CAST IRON

RETROFIT INSTALLATIONS WILL NOT REQUIRE EXISTING DEPRESSED CURBING TO BE REPLACED. A NOMINAL 6 TO 8 INCH SETBACK FROM FACE OF CURB SHALL BE ENFORCED FOR NEAR EDGE OF TACTILE DOMES.

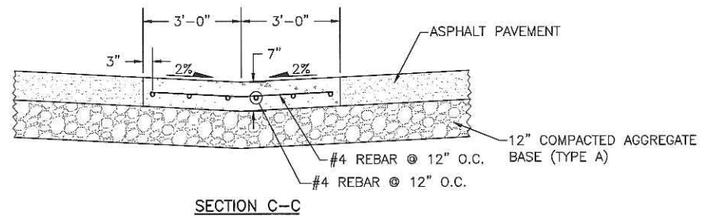

SECTION C–C

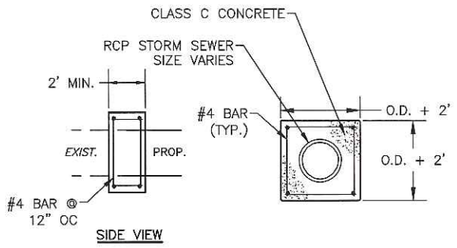

3 CONCRETE FIELD COLLAR
SCALE: NONE

NOTE: TO BE INSTALLED @ ALL PROPOSED TO EXISTING PIPE CONNECTIONS. COST TO BE INCLUDED IN THE COST OF PIPE.

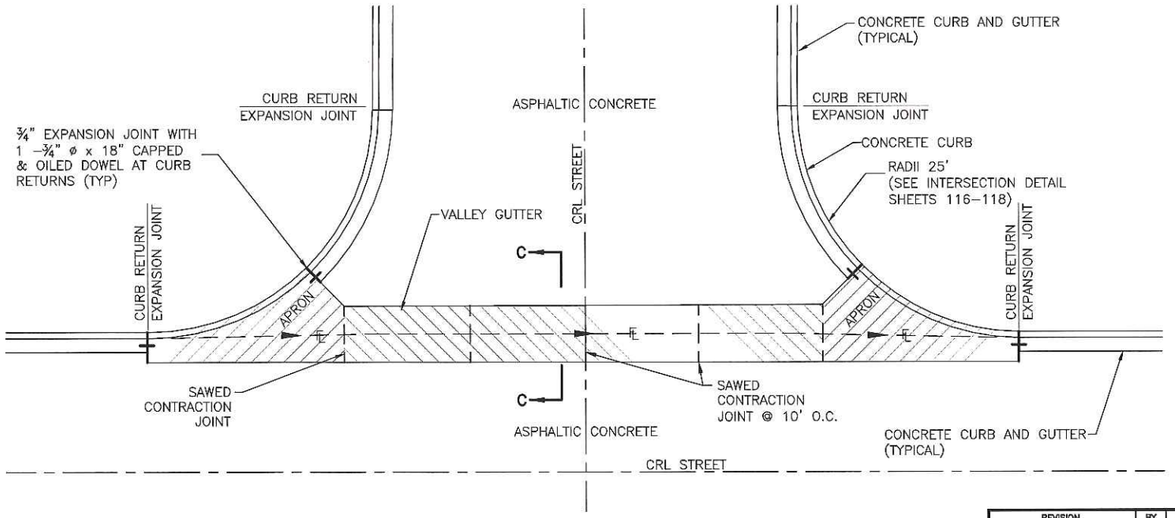

4 CONCRETE VALLEY GUTTER DETAIL
SCALE: NONE

NOTES:

1. OMIT GUTTER AROUND APRON. SLOPE ALL PARTS OF APRON FROM CURB TO NEAREST FLOW LINE WITHIN LIMITS OF VALLEY GUTTER. TRANSITION RETURN GUTTER TO FALL AWAY SECTION AS NECESSARY TO DRAIN TO VALLEY GUTTER FLOW LINE.

2. VALLEY GUTTER AND APRON TO BE 7" THICK CLASS "AA" (4000 PSI) P.C.C. (H.E.S.) OVER 12" COMPACTED TYPE "A" AGG. BASE.

3. PLACE VALLEY GUTTER SEPARATE FROM APRONS. PROVIDE EXPANSION JOINT AT COLD JOINT.

4. REFERENCE INTERSECTION DETAILS FOR SPOT ELEVATIONS AT GUTTER AND APRON.

5. REINFORCE APRON W/ #4 BARS @ 12" O.C. REINFORCING STEEL IS TO BE INCLUDED IN THE COST OF CLASS AA CONCRETE.

LICENSED PROFESSIONAL ENGINEER
BENJAMIN M. FLETCHER
24921
OKLAHOMA

8/7/2020

DETAILS

PROJECT #144628–W, TMUA–W 18–16

MAINTENANCE ZONE 6028–W
TUPELO CREEK DRAINAGE

CITY OF TULSA, OKLAHOMA
ENGINEERING SERVICES DEPARTMENT

PLANS AND ESTIMATES PREPARED BY:
Meshek & Associates, L.L.C.
1437 S. Boulder Avenue, Suite 1550 Tulsa, OK 74119 (918)392–5620

REVISION	BY	DATE

PLAN SCALE N/A	DRAWN	SCB	08/20
	DESIGNED	BWF	08/20
	SURVEY	AB	08/18
PROFILE SCALE	PROJ. MGR.		
HORIZONTAL: N/A	LEAD ENGR.		
	FIELD MGR.		
VERTICAL: N/A	RECOMMENDED DESIGN MANAGER		
FILE:	DRAWING:		
ATLAS PAGE NO. 235			

APPROVED:
CITY ENGINEER
DATE:
SHEET 19 OF 161 SHEETS

PRINT DATE: 08/07/2020 M:\City_of_Tulsa\18TUL02_MZ6028_Tupelo_Creek_Drainage\Design\Drawings\18TUL02_TYPICALS_DETAILS.dwg

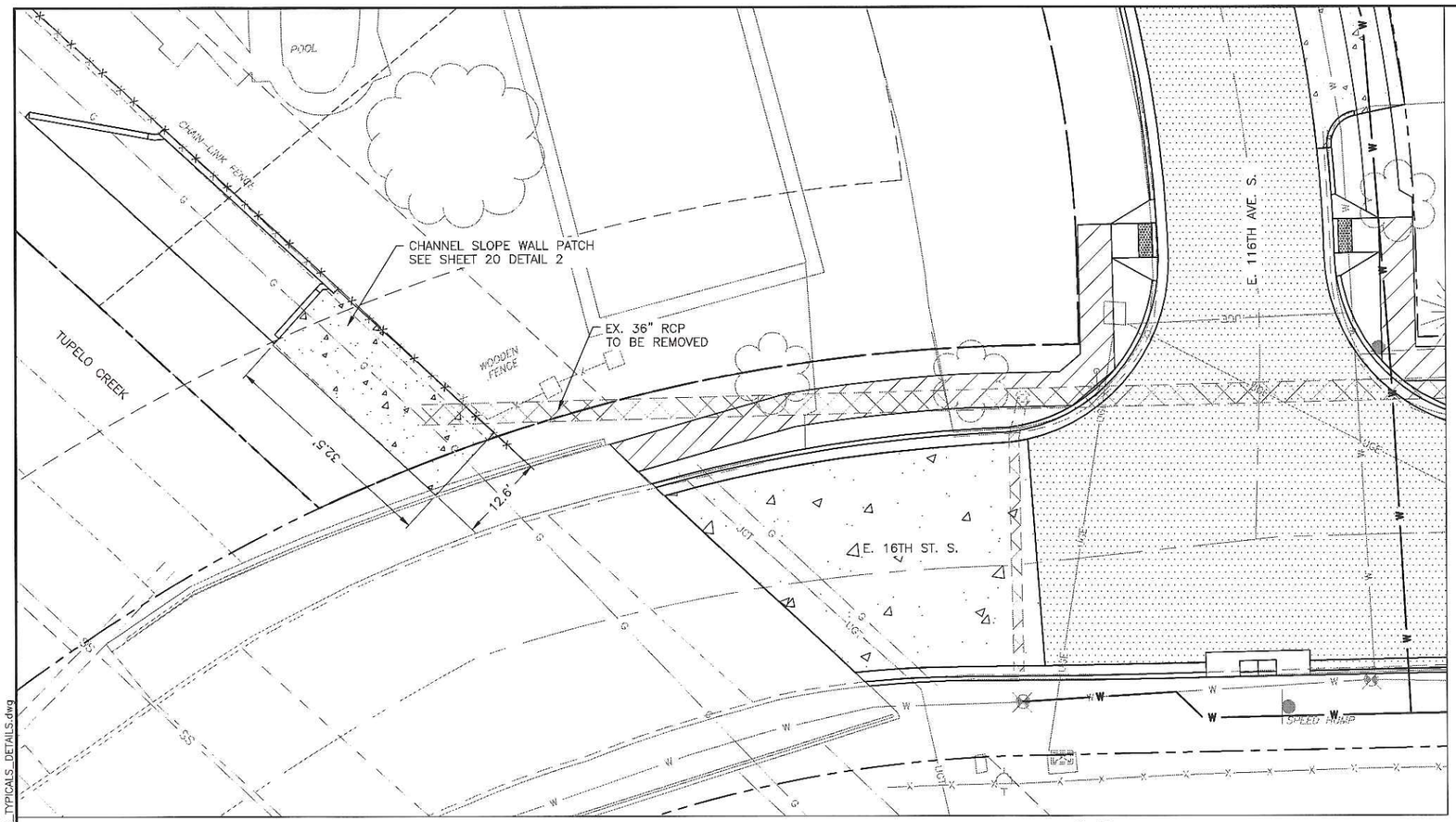

1 36" PIPE REMOVAL AND SLOPE WALL PATCH – PLAN VIEW
SCALE: NONE

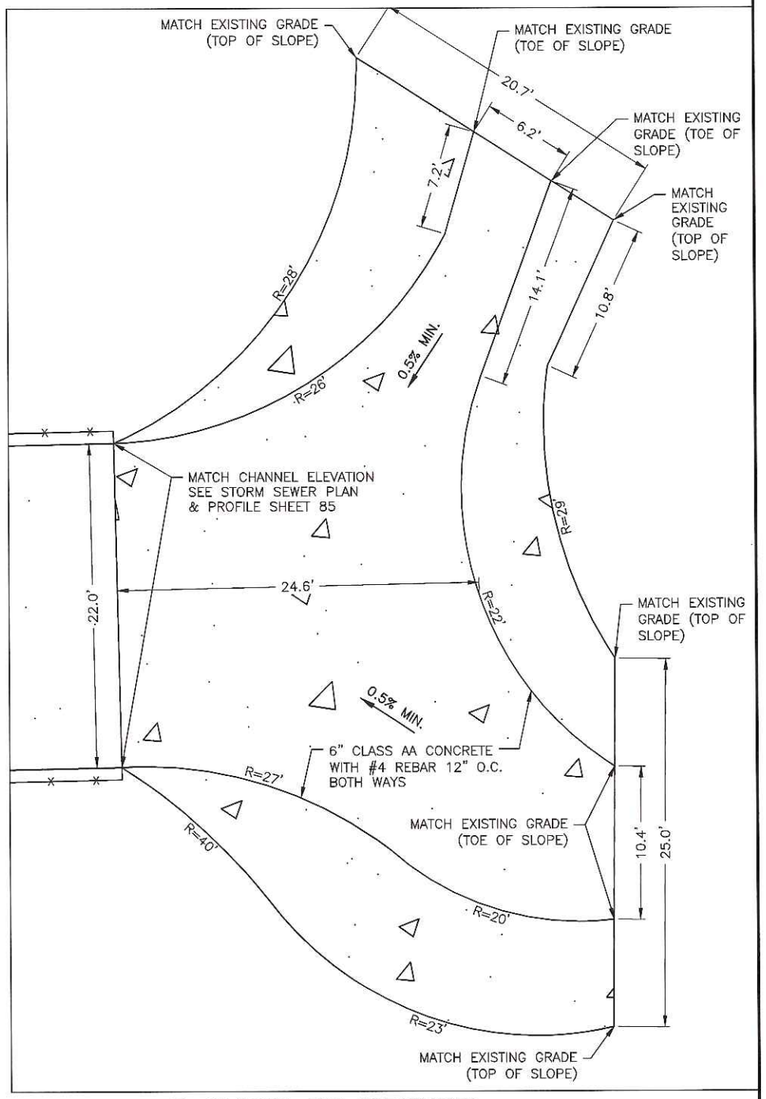

3 CHANNEL END TREATMENT
SCALE: 1" = 5'

N

0 5 10 20
SCALE IN FEET

CAUTION
NATURAL GAS
UNDERGROUND ELECTRIC
UNDERGROUND TELEPHONE
WATERLINE

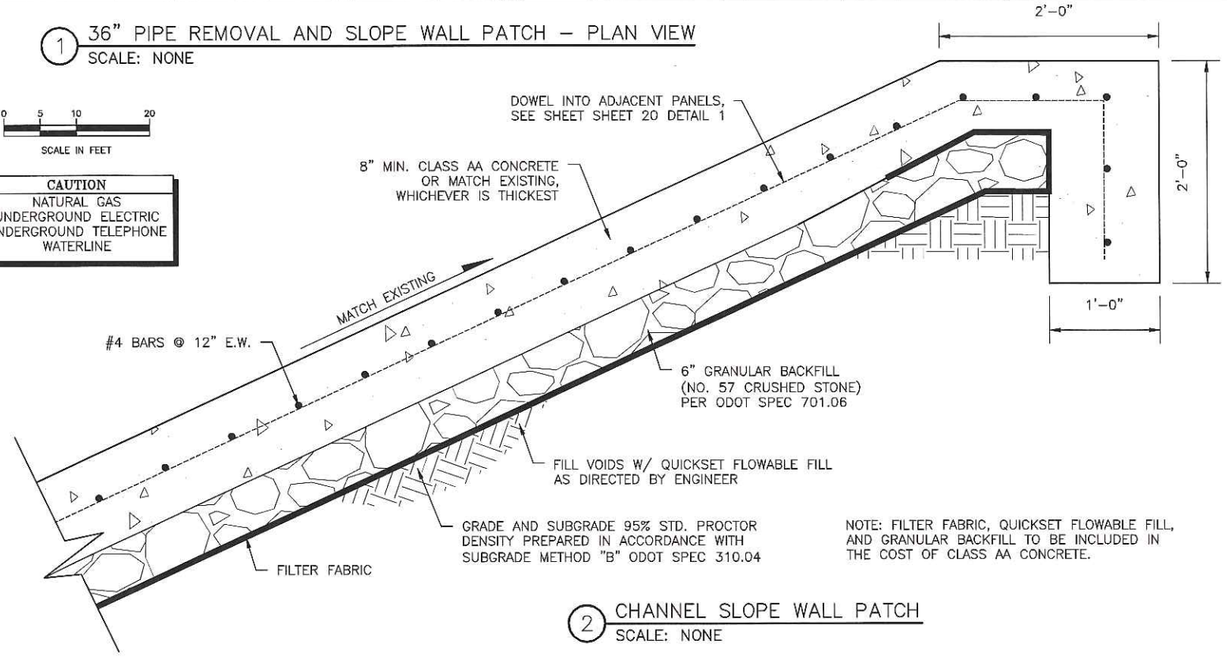

NOTE: FILTER FABRIC, QUICKSET FLOWABLE FILL, AND GRANULAR BACKFILL TO BE INCLUDED IN THE COST OF CLASS AA CONCRETE.

2 CHANNEL SLOPE WALL PATCH
SCALE: NONE

LICENSED PROFESSIONAL ENGINEER
BENJAMIN R. FLETCHER
24921
OKLAHOMA
8/7/2020

DETAILS

PROJECT #144628-W, TMUA-W 18-16
MAINTENANCE ZONE 6028-W
TUPELO CREEK DRAINAGE
CITY OF TULSA, OKLAHOMA
ENGINEERING SERVICES DEPARTMENT

PLANS AND ESTIMATES PREPARED BY:
Meshek & Associates, L.L.C.
1437 S. Boulder Avenue, Suite 1550 Tulsa, OK 74119 (918)392-5620

REVISION	BY	DATE

PLAN SCALE	DRAWN	SCB	08/20
N/A	DESIGNED	BWF	08/20
	SURVEY	AB	08/18
PROFILE SCALE	PROJ. MGR.		
HORIZONTAL: N/A	LEAD ENGR.		
	FIELD MGR.		
VERTICAL: N/A	RECOMMENDED		
	DESIGN MANAGER		
FILE:	DRAWING:		
ATLAS PAGE NO. 235			

APPROVED:
CITY ENGINEER
DATE:
SHEET 20 OF 161 SHEETS

PRINT DATE: 08/07/2020 M:\City_of_Tulsa\18TUL02_MZ6028_Tupelo_Creek_Drainage\Design\Drawings\18TUL02_TYPICALS_DETAILS.dwg

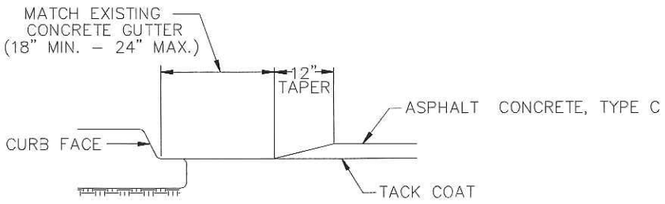

CURB DETAIL

SECTION B–B

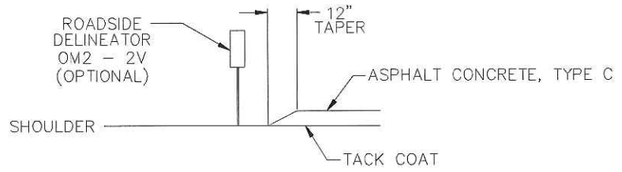

SHOULDER DETAIL FOR STREETS WITHOUT CURBS

SECTION B–B

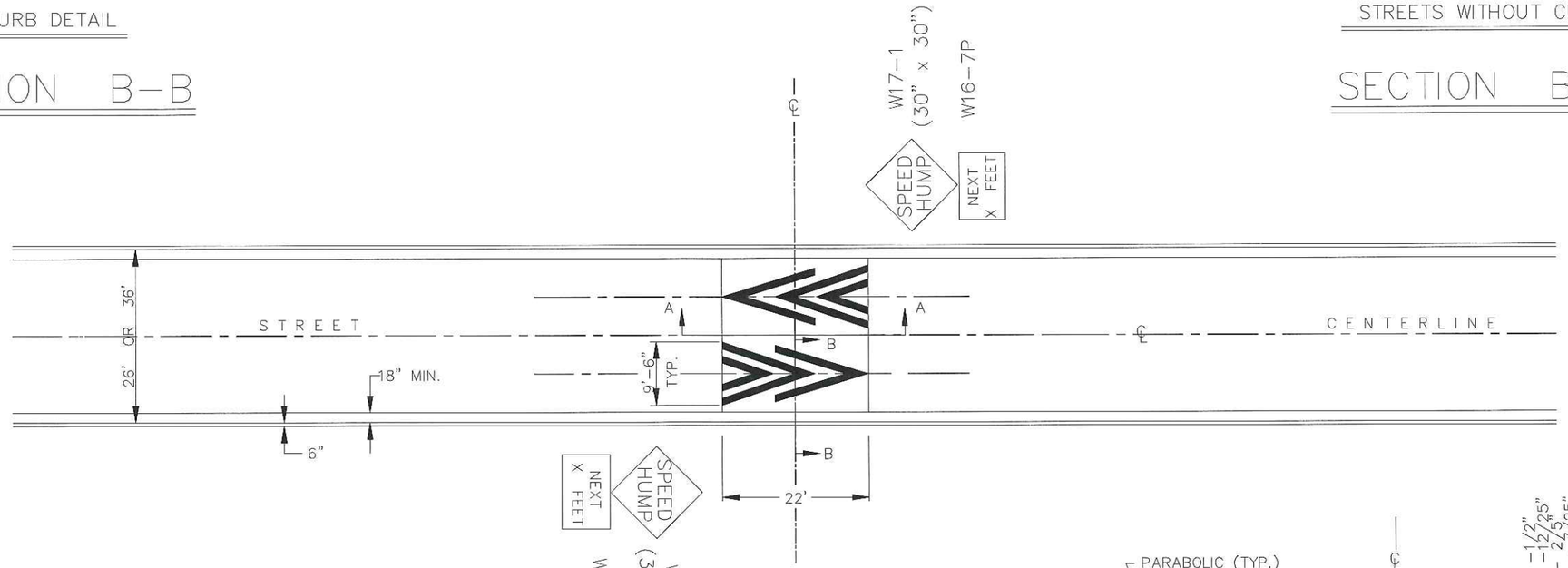

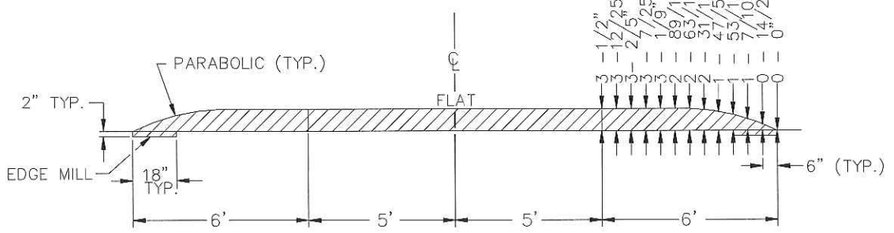

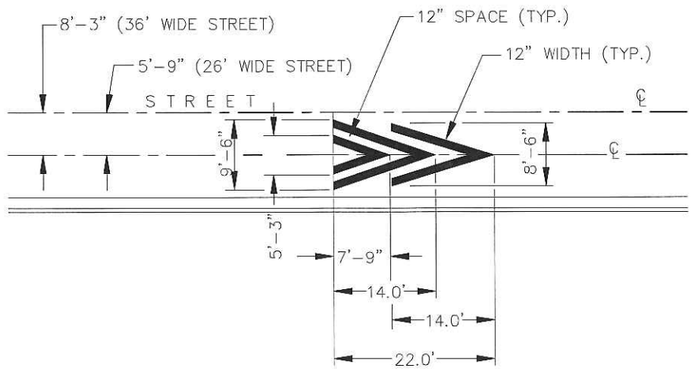

TYPICAL PAVEMENT MARKING DETAIL

NOT TO SCALE

SECTION A–A

NOT TO SCALE

NOTES:

1. FABRICATE DELINEATOR AND WARNING SIGNS WITH ENCAPSULATED LENS AND REFLECTIVE SHEETING SPEC. TYPE III STANDARDS.

2. INSTALL WHITE 120 MIL THICK PAVEMENT MARKINGS USING HOT APPLIED THERMOPLASTIC COMPOUND MATERIALS CONFORMING TO 1999 OKLAHOMA DEPT. OF TRANSPORTATION STANDARD SPECIFICATION FOR HIGHWAY CONSTRUCTION.

(6) 22' SPEED HUMP DETAIL
SCALE: NONE



8/7/2020

REVISION	BY	DATE

PLAN SCALE N/A	DRAWN	SCB	08/20
	DESIGNED	BWF	08/20
	SURVEY	AB	08/18
PROFILE SCALE	PROJ. MGR.		
HORIZONTAL: N/A	LEAD ENGR.		
	FIELD MGR.		
VERTICAL: N/A	RECOMMENDED DESIGN MANAGER		
FILE:	DRAWING:		
ATLAS PAGE NO. 235			

APPROVED:

CITY ENGINEER

DATE:

SHEET 21 OF 161 SHEETS

DETAILS

PROJECT #144628–W, TMUA–W 18–16

MAINTENANCE ZONE 6028–W
TUPELO CREEK DRAINAGE

CITY OF TULSA, OKLAHOMA
ENGINEERING SERVICES DEPARTMENT

PLANS AND ESTIMATES PREPARED BY:
Meshek & Associates, L.L.C.
1437 S. Boulder Avenue, Suite 1550 Tulsa, OK 74119 (918)392–5620

PRINT DATE: 08/07/2020 M:\City_of_Tulsa\18TUL02_MZ6028_Tupelo_Creek_Drainage\Design\Drawings\18TUL02_TYPICALS_DETAILS.dwg

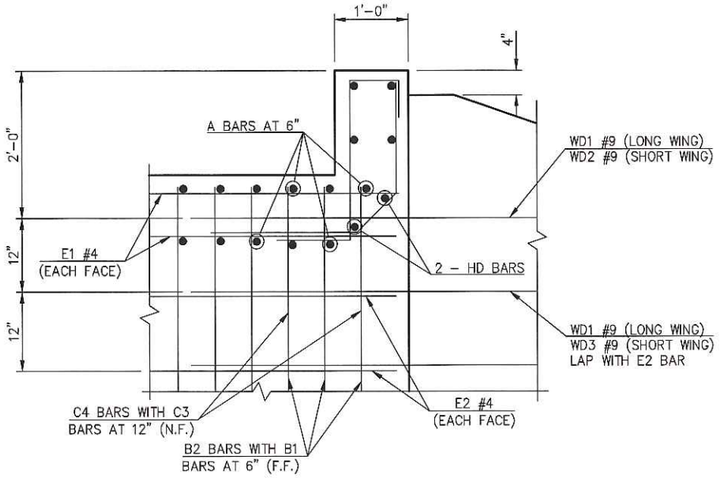

① HEADWALL DETAIL AT EXTERIOR WALL

① FOR FURTHER INFORMATION REGARDING END SECTION BARS A, B, C, E1, AND E2, REFER TO RCB CULVERT - BARREL DETAILS

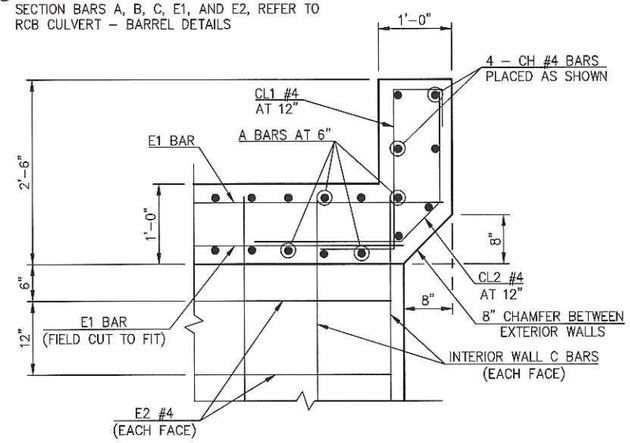

① HEADWALL DETAIL AT INTERIOR WALL

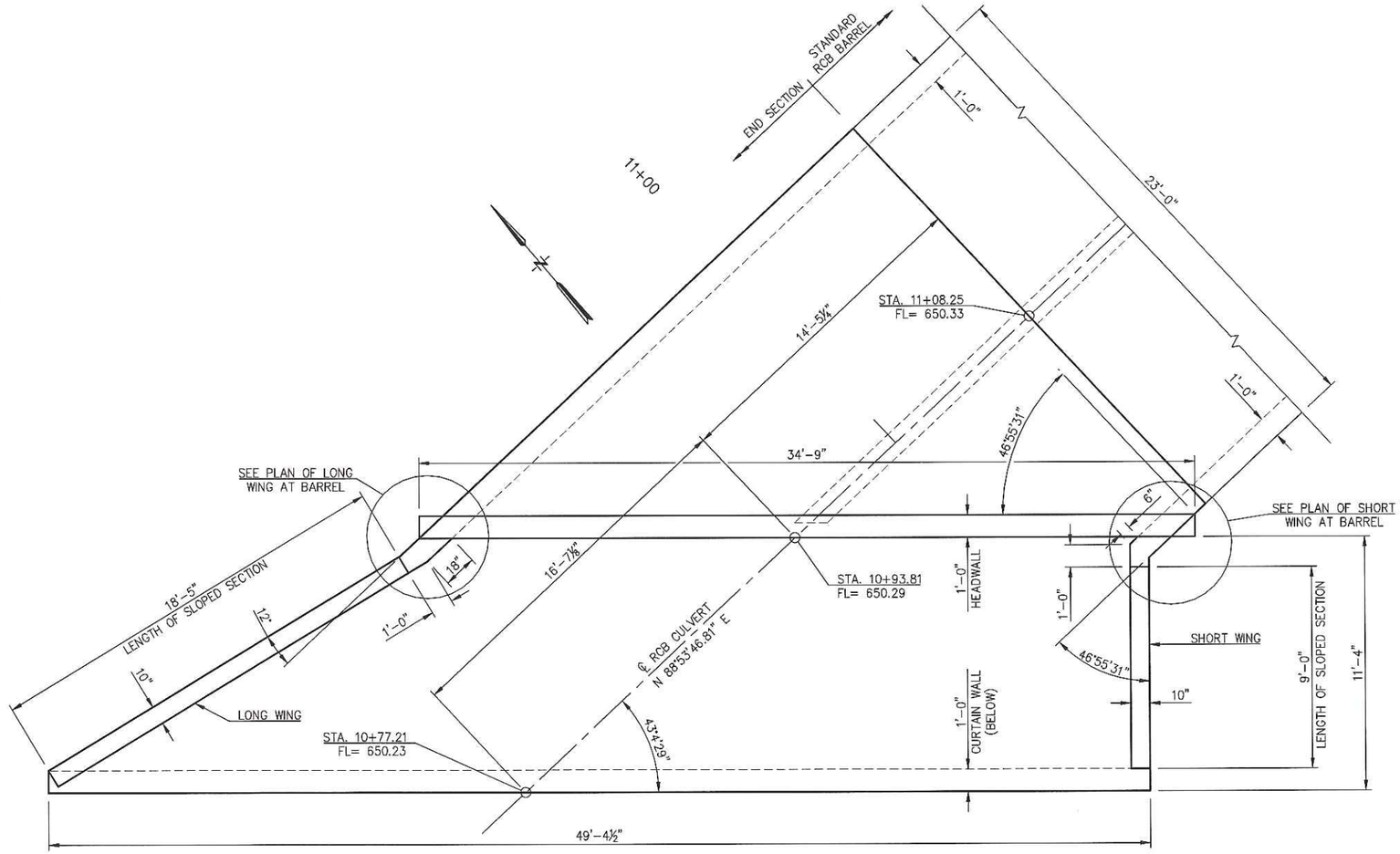

END SECTION PLAN

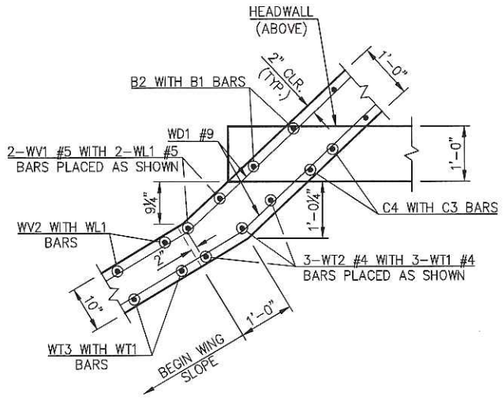

PLAN OF LONG WING AT BARREL

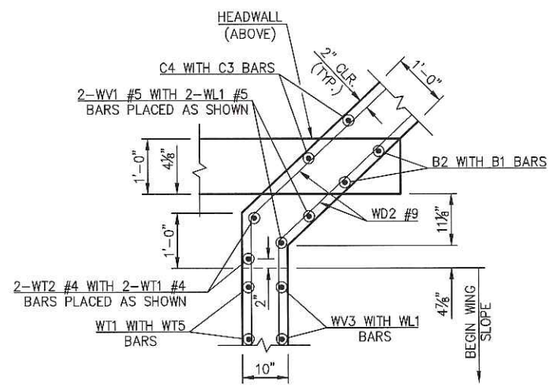

PLAN OF SHORT WING AT BARREL

END SECTION QUANTITIES		
ONE END CONNECTION, ONE APRON, ONE HEADWALL, ONE CURTAIN WALL AND TWO WINGS		
ITEM	UNIT	TOTAL
CLASS AA CONCRETE	C.Y.	68.20
REINFORCING STEEL	LB.	14,020.00

NOTE:
SEE "RCB CULVERTS - BARREL DETAILS
10'-0" SPAN - DOUBLE CELL 2 FT. TO 12 FT.
FILL STD. RCB-C2-10(2-12)" FOR ADDITIONAL INFORMATION.



STRUCTURE NO. 1
(SHEET NO. 1 OF 4)

PROJECT #144628-W, TMUA-W 18-16

MAINTENANCE ZONE 6028-W
TUPELO CREEK DRAINAGE

CITY OF TULSA, OKLAHOMA
ENGINEERING SERVICES DEPARTMENT

PLANS AND ESTIMATE PREPARED BY:
NEO DESIGN LLC

REVISION	BY	DATE

PLAN SCALE: N/A
PROFILE SCALE
HORIZONTAL: N/A
VERTICAL: N/A
DRAWN
DESIGNED
SURVEY
PROJ. MGR.
LEAD ENGR.
FIELD MGR.
RECOMMENDED:
DESIGN MANAGER
FILE:
DRAWING:
ATLAS PAGE NO: 235

APPROVED:
CITY ENGINEER
DATE
SHEET 22 OF 161 SHEETS

N:\JOBS\Meshek\MZ 6028-W\DWG\MZ6028W-STRUCTURE NO.4.dwg, STR1-1, 6/17/2020 10:28:48 AM

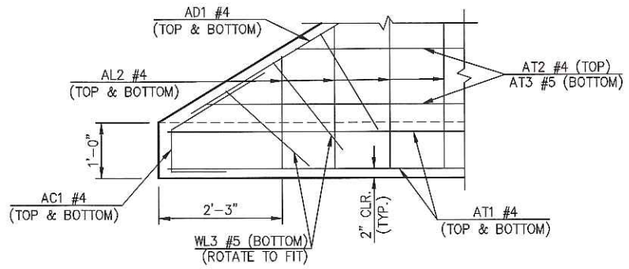

DETAIL 'A'

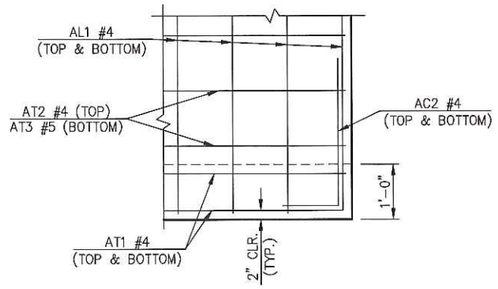

DETAIL 'B'

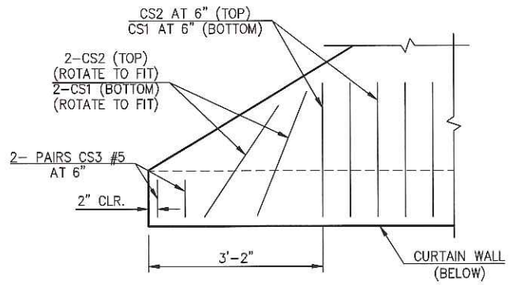

CURTAIN WALL AT SKEWED END – APRON PLAN

APRON REINFORCING

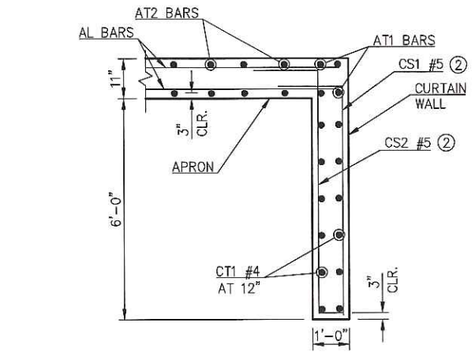

CURTAIN WALL DETAIL

② CS1 AND CS2 BARS ALIGN WITH AL BARS IN APRON SLAB UNLESS SHOWN OTHERWISE.

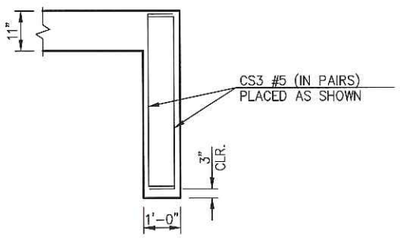

CURTAIN WALL END DETAIL

APRON, HEADWALL & CURTAIN WALL BAR LIST					
ONE APRON, ONE HEADWALL, AND ONE CURTAIN WALL					
MARK	SIZE	QTY.	FORM	LENGTH	VARIANCE
AC1	#4	2	BNT.	3'-8"	–
AC2	#4	2	BNT.	3'-8"	
AD1	#4	2	STR.	20'-2"	–
AL1	#4	62	STR.	13'-2"	–
① AL2	#4	30	STR.	6'-3" AVG.	2'-0" TO 10'-6"
AL3	#4	4	STR	11'-2"	
AT1	#4	4	STR.	49'-0"	–
AT2	#4	11	STR.	40'-3" AVG.	32'-6" TO 48'-0"
AT3	#5	11	STR.	40'-3" AVG.	32'-6" TO 48'-0"
CH	#4	4	STR.	34'-5"	–
CL1	#4	34	BNT.	4'-4"	–
CL2	#4	34	BNT.	4'-3"	–
CS1	#5	96	BNT.	7'-9"	–
CS2	#5	96	BNT.	8'-11"	–
CS3	#5	4	BNT.	7'-10"	–
CT1	#4	12	STR.	49'-0"	–
HD	#8	2	STR.	34'-5"	

① 2 SETS OF 15 BARS

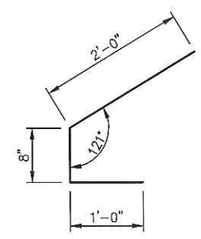

AC1 #4 x 3'-8"

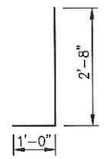

AC2 #4 x 3'-8"

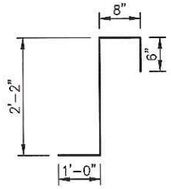

CL1 #4 x 4'-4"

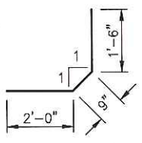

CL2 #4 x 4'-3"

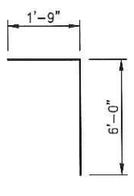

CS1 #5 x 7'-9"

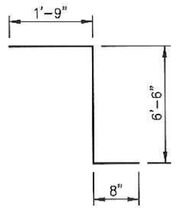

CS2 #5 x 8'-11"

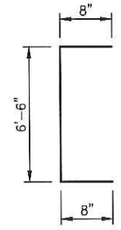

CS3 #5 x 7'-10"



STRUCTURE NO. 1
(SHEET NO. 2 OF 4)

PROJECT #144628-W, TMUA-W 18-16

MAINTENANCE ZONE 6028-W
TUPELO CREEK DRAINAGE

CITY OF TULSA, OKLAHOMA
ENGINEERING SERVICES DEPARTMENT

PLANS AND ESTIMATE PREPARED BY:
NEO DESIGN LLC

REVISION	BY	DATE

PLAN SCALE N/A
PROFILE SCALE
HORIZONTAL N/A
VERTICAL N/A
DRAWN
DESIGNED
SURVEY
PROJ. MGR.
LEAD ENGR.
FIELD MGR.
RECOMMENDED:
DESIGN MANAGER
FILE:
DRAWING:
ATLAS PAGE NO: 235

APPROVED:
CITY ENGINEER
DATE
SHEET 23 OF 161 SHEETS

N:\JOBS\Meshek\MZ 6028-W\DWG\MZ6028W-STRUCTURE NO.4.dwg, STR1-2, 6/17/2020 10:29:23 AM

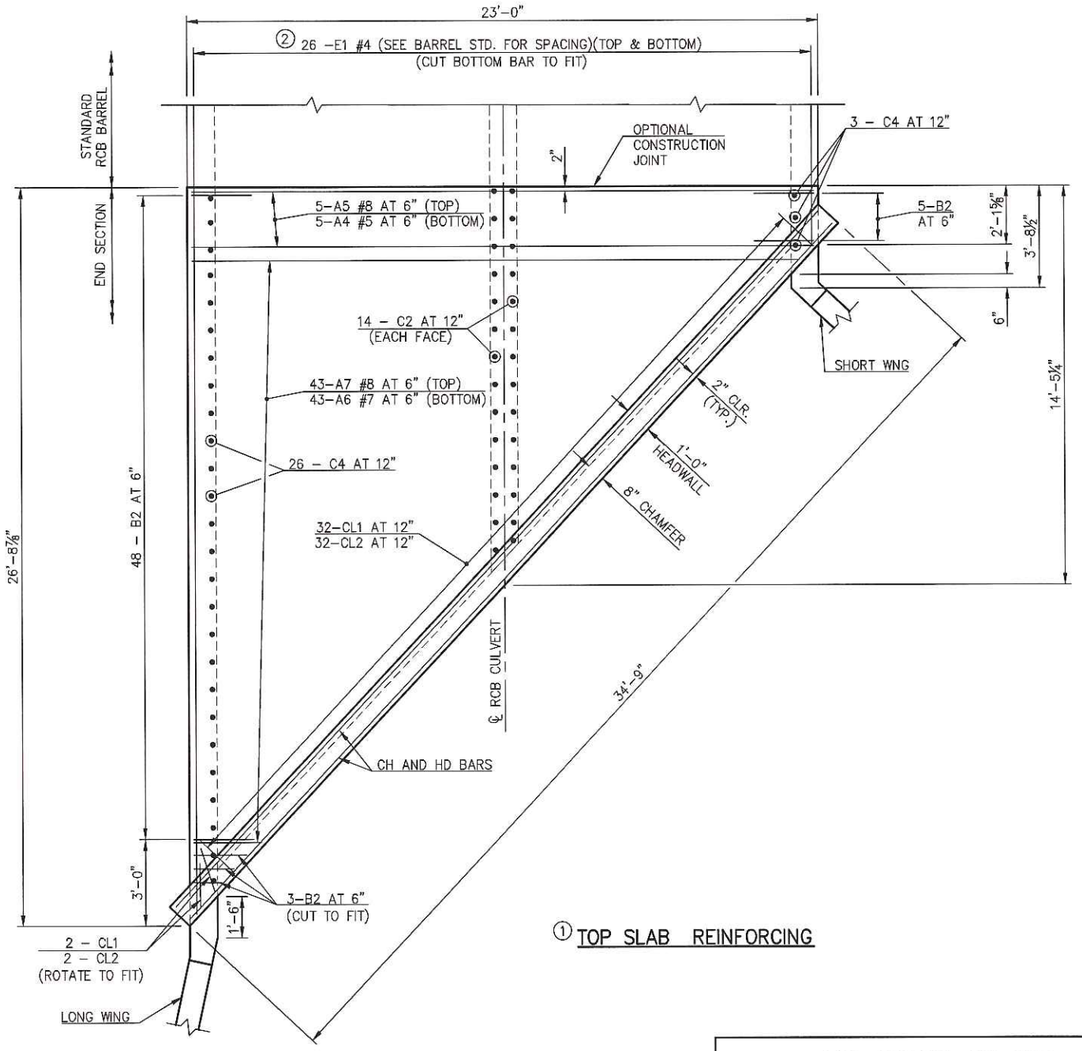

① TOP SLAB REINFORCING

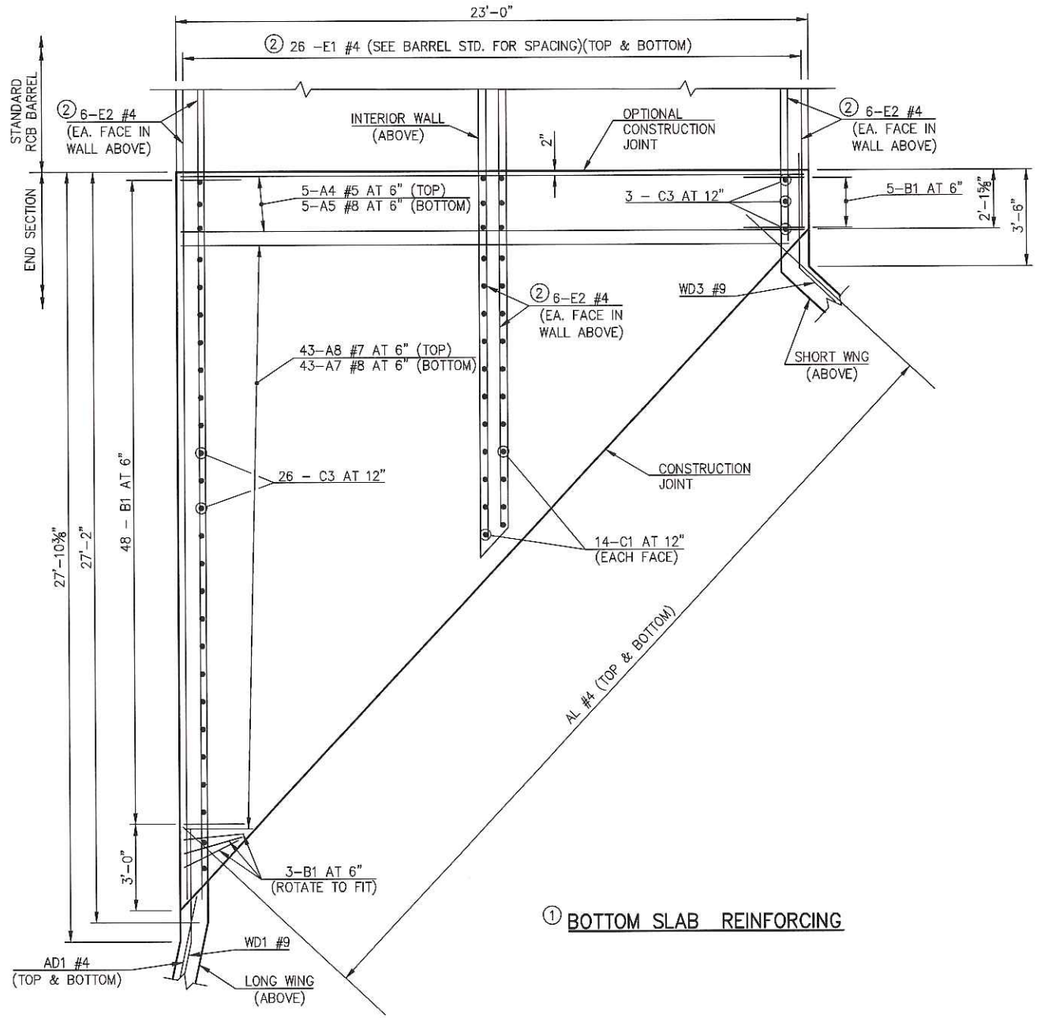

① BOTTOM SLAB REINFORCING

NOTES:

① FOR FURTHER INFORMATION REGARDING END SECTION A, B, C, AND E BARS REFER TO RCB CULVERT – BARREL DETAILS.

② LENGTHS OF E1 AND E2 BARS SHOWN ARE ADDITIONAL LENGTHS REQUIRED FOR THE END SECTION. LAP SPLICES, AS REQUIRED, SHALL BE IN ACCORDANCE WITH RCB BARREL STANDARD NOTES.

③ TWO SETS OF 43 BARS

④ FOUR SETS OF 26 BARS

⑤ THREE SETS OF 12–E2 BARS REQUIRED WITH LENGTHS AS SHOWN CORRESPONDING TO SHORT EXTERIOR WALL, INTERIOR WALL, LONG EXTERIOR WALL.

END SECTION BAR LIST

ONE END SECTION

	MARK	SIZE	QTY.	FORM	LENGTH	VARIANCE
	A4	#5	10	STR.	22'–8"	–
	A5	#8	10	STR.	22'–8"	–
	A6	#7	43	STR.	11'–4" AVG.	1'–6" TO 21'–2"
③	A7	#8	86	STR.	12'–3" AVG.	2'–5" TO 22'–1"
	A8	#7	43	STR.	12'–3" AVG.	2'–5" TO 22'–1"
	B1	#5	56	BNT.	4'–8"	–
	B2	#5	56	BNT.	9'–0"	–
	C1	#4	28	STR.	2'–2"	–
	C2	#4	28	STR.	6'–10"	–
	C3	#4	29	STR.	2'–2"	–
	C4	#4	29	STR.	6'–10"	–
④	E1	#4	104	STR.	14'–2" AVG.	2'–1" TO 26'–3"
⑤	E2	#4	36	STR.	13'–6" AVG.	2'–1", 12'–11", 25'–7"

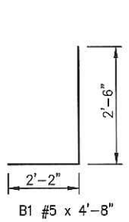

B1 #5 x 4'-8"

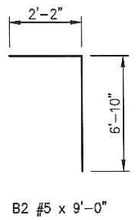

B2 #5 x 9'-0"

STEPHEN MICHAEL ... 25327 ... OKLAHOMA ... LICENSED PROFESSIONAL ENGINEER
7-30-20

STRUCTURE NO. 1
(SHEET NO. 3 OF 4)

PROJECT #144628-W, TMUA-W 18-16

MAINTENANCE ZONE 6028-W
TUPELO CREEK DRAINAGE

CITY OF TULSA, OKLAHOMA
ENGINEERING SERVICES DEPARTMENT

PLANS AND ESTIMATE PREPARED BY:
NEO DESIGN LLC

REVISION	BY	DATE

PLAN SCALE N/A
PROFILE SCALE HORIZONTAL N/A
VERTICAL N/A

DRAWN | DESIGNED | SURVEY | PROJ. MGR. | LEAD ENGR. | FIELD MGR. | RECOMMENDED: | DESIGN MANAGER

APPROVED: CITY ENGINEER

FILE: DRAWING: DATE

ATLAS PAGE NO: 235

SHEET 24 OF 161 SHEETS

N:\JOBS\Meshek\MZ 6028-W\DWG\MZ6028W-STRUCTURE NO.4.dwg, STR1-3, 6/17/2020 10:29:54 AM

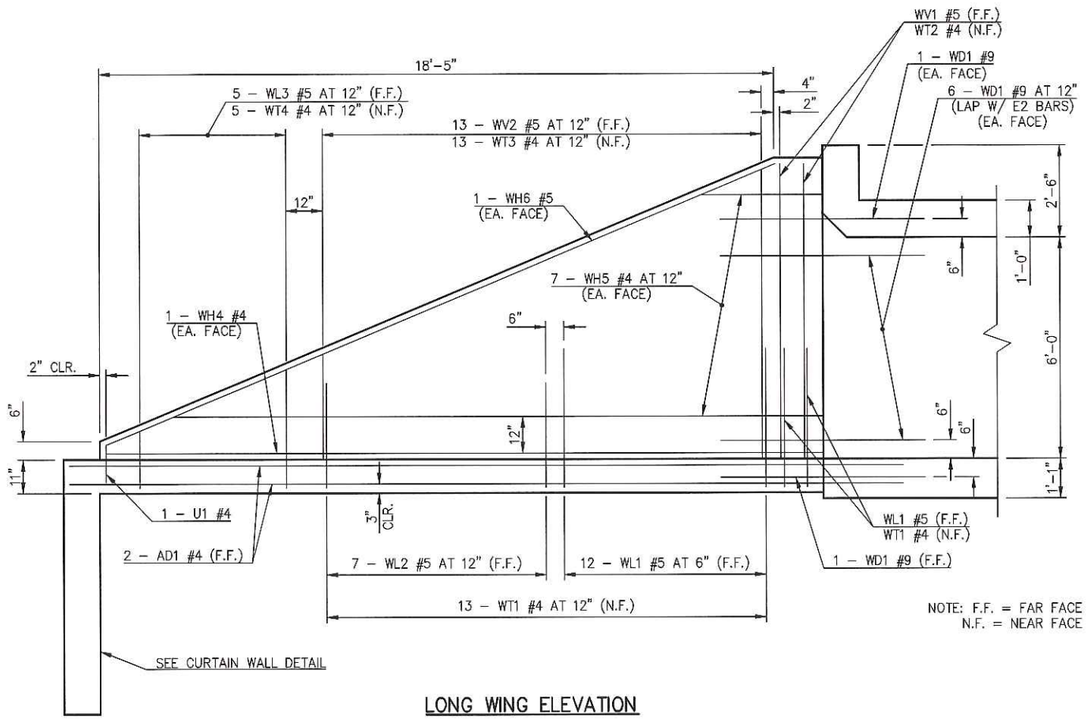

LONG WING ELEVATION

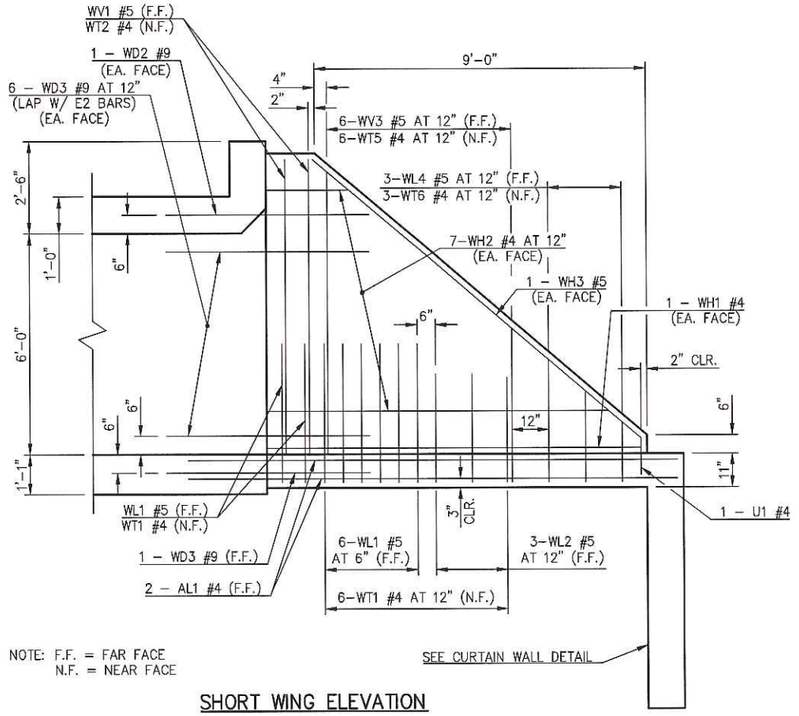

SHORT WING ELEVATION

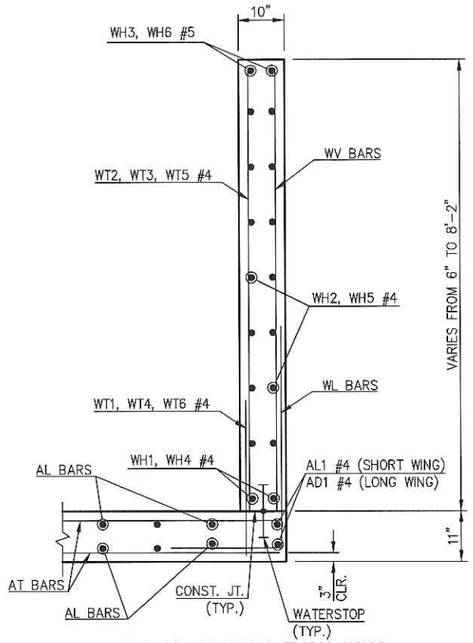

TYPICAL SECTION THRU WING

LONG WINGWALL BAR LIST

MARK	SIZE	QTY.	FORM	LENGTH	VARIANCE
WD1	#9	15	BNT.	8'–4"	–
WH4	#4	2	STR.	19'–7"	–
① WH5	#4	14	STR.	10'–5½" AVG.	3'–3" TO 17'–8"
WH6	#5	2	STR.	19'–9"	–
WL1	#5	14	BNT.	8'–6"	–
WL2	#5	7	BNT.	4'–10"	–
WL3	#5	5	BNT.	4'–4" AVG.	3'–6" TO 5'–2"
WT1	#4	16	STR.	2'–10"	–
WT2	#4	3	STR.	8'–0"	–
WT3	#4	13	STR.	5'–4" AVG.	2'–10" TO 7'–10"
WT4	#4	5	STR.	2'–4" AVG.	1'–6" TO 3'–2"
WV1	#5	2	STR.	8'–0"	–
WV2	#5	13	STR.	5'–4" AVG.	2'–10" TO 7'–10"
U1	#4	1	BNT.	2'–6"	–

① TWO SETS OF 7 BARS

NOTE:
INSTALL 6" RIBBED STYLE OR DUMBBELL STYLE PVC WATERSTOP FOR THE FULL LENGTH OF CONSTRUCTION JOINTS. INCLUDE COST IN OTHER ITEMS OF WORK.

SHORT WINGWALL BAR LIST

MARK	SIZE	QTY.	FORM	LENGTH	VARIANCE
WD2	#9	2	BNT.	7'–9"	–
WD3	#9	13	BNT.	8'–4"	–
WH1	#4	2	STR.	10'–2"	–
① WH2	#4	14	STR.	5'–9" AVG.	2'–3" TO 9'–3"
WH3	#5	2	STR.	11'–8"	–
WL1	#5	6	BNT.	8'–6"	–
WL2	#5	3	BNT.	4'–10"	–
WL4	#5	3	BNT.	4'–4" AVG.	3'–6" TO 5'–2"
WT1	#4	8	STR.	2'–10"	–
WT5	#4	6	STR.	5'–6" AVG.	3'–4" TO 7'–8"
WT6	#4	3	STR.	2'–4" AVG.	1'–6" TO 3'–2"
WV1	#5	2	STR.	8'–0"	–
WV3	#5	6	STR.	5'–6" AVG.	3'–4" TO 7'–8"
U1	#4	1	BNT.	2'–6"	–

① TWO SETS OF 7 BARS

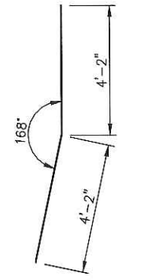

WD1 #9 x 8'–4"

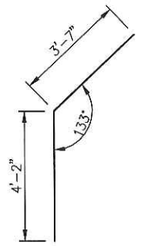

WD2 #9 x 7'–9"

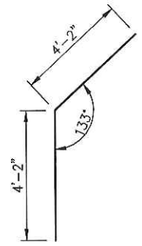

WD3 #9 x 8'–4"

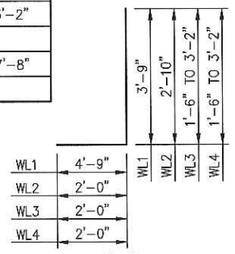

WL1 #5 x 8'–6"
WL2 #5 x 4'–10"
WL3 #5 x 4'–4" AVG.
WL4 #5 x 4'–4" AVG.

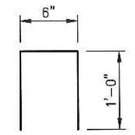

U1 #4 x 2'–6"

LICENSED PROFESSIONAL ENGINEER
STEPHEN C. NICHOLS
21327
OKLAHOMA
7-30-20

STRUCTURE NO. 1
(SHEET NO. 4 OF 4)

PROJECT #144628-W, TMUA-W 18-16

MAINTENANCE ZONE 6028-W
TUPELO CREEK DRAINAGE

CITY OF TULSA, OKLAHOMA
ENGINEERING SERVICES DEPARTMENT

PLANS AND ESTIMATE PREPARED BY:
NEO DESIGN LLC

REVISION	BY	DATE

PLAN SCALE N/A	DRAWN	APPROVED:
	DESIGNED	
	SURVEY	
PROFILE SCALE	PROJ. MGR.	
HORIZONTAL N/A	LEAD ENGR.	
	FIELD MGR.	
VERTICAL N/A	RECOMMENDED:	
	DESIGN MANAGER	CITY ENGINEER
FILE:	DRAWING:	DATE
ATLAS PAGE NO: 235		SHEET 25 OF 161 SHEETS

N:\JOBS\Meshek\MZ 6028-W\DWG\MZ6028W-STRUCTURE NO.4.dwg, STR1-4, 6/17/2020 10:31:53 AM

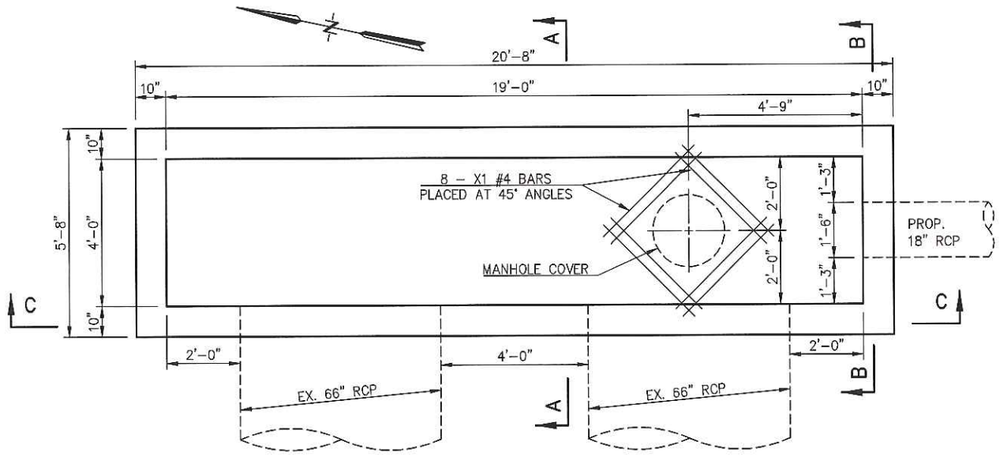

PLAN – JUNCTION BOX

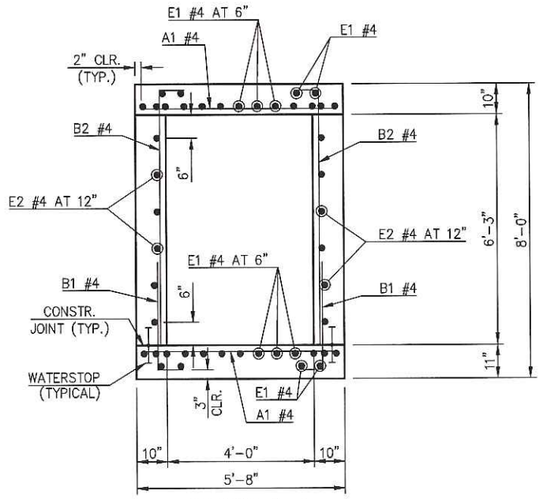

SECTION A–A
AGGREGATE BASE NOT
SHOWN FOR CLARITY

QUANTITIES		
ONE JUNCTION BOX		
ITEM	UNIT	TOTAL
CLASS AA CONCRETE	CY	17.20
REINFORCING STEEL	LB	1,480.00
AGGREGATE BASE TYPE A	CY	32.80
MANHOLE	EA	1.00

NOTES:

1. ALL CONSTRUCTION AND MATERIAL REQUIREMENTS SHALL BE IN ACCORDANCE WITH THE 2009 OKLAHOMA STANDARD SPECIFICATIONS FOR HIGHWAY CONSTRUCTION.
2. ALL CONCRETE EDGES SHALL HAVE A 1½" CHAMFER UNLESS OTHERWISE SHOWN OR NOTED. ALL CHAMFER STRIPS SHALL BE SIZED LUMBER.
3. ALL REINFORCING STEEL SHALL HAVE A 2" MINIMUM CLEAR COVER UNLESS OTHERWISE SHOWN.
4. COMPACT AGGREGATE BASE TYPE "A" TO 95% STD. PROCTOR.

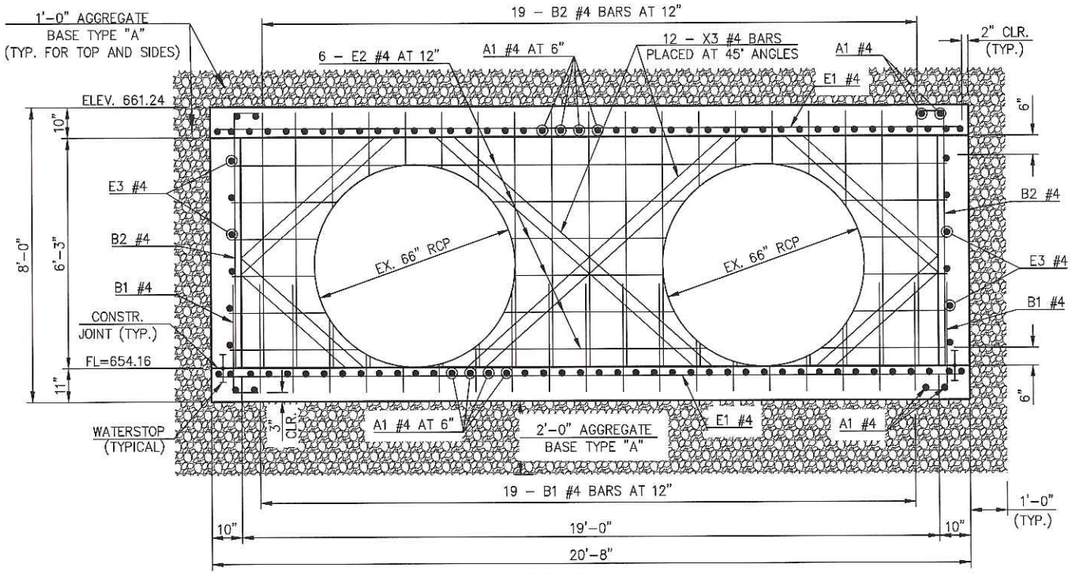

SECTION C–C

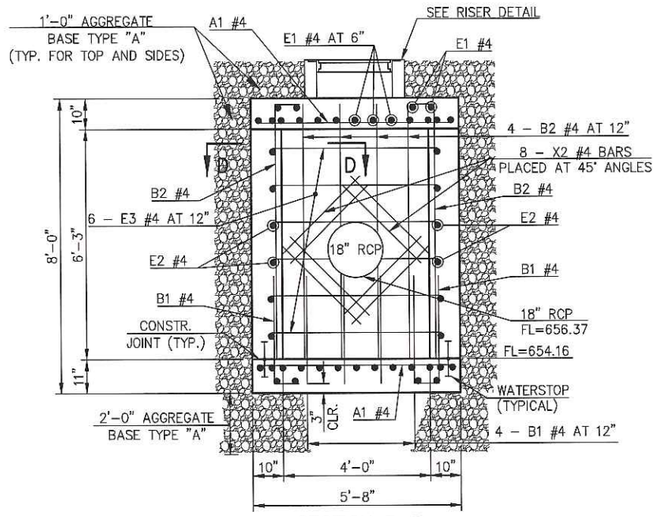

SECTION B–B

JUNCTION BOX BAR LIST				
MARK	SIZE	QTY.	FORM	LENGTH
A1	#4	92	STR.	5'-4"
B1	#4	50	BNT.	3'-7"
B2	#4	50	BNT.	7'-7"
E1	#4	34	STR.	20'-4"
E2	#4	12	BNT.	20'-10"
E3	#4	12	BNT.	5'-10"
RH	#4	2	SPIRAL	8'-4"
RV	#4	6	BNT.	2'-1"
X1	#4	8	STR.	3'-6"
X2	#4	8	STR.	3'-0"
① X3	#4	12	STR.	6'-0" AVG.

① 4 @ 9'-0", 4 @ 5'-0", 4 @ 4'-0"

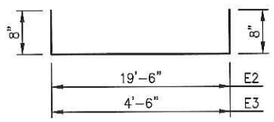

E2 #4 x 20'-10"
E3 #4 x 5'-10"

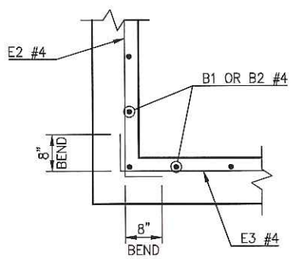

SECTION D–D
WALL CORNER

NOTE:
INSTALL 6" RIBBED STYLE OR DUMBBELL STYLE PVC WATERSTOP FOR THE FULL LENGTH OF CONSTRUCTION JOINTS. INCLUDE COST IN OTHER ITEMS OF WORK.

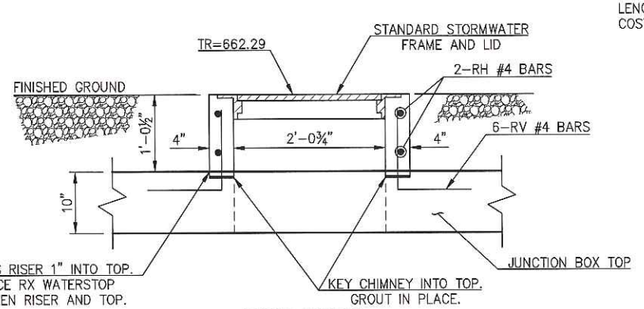

RISER DETAIL

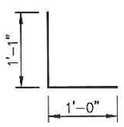

RV #4 x 2'-1"

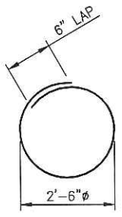

RH #4 x 8'-4"

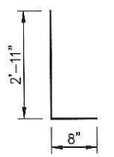

B1 #4 x 3'-7"

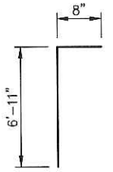

B2 #4 x 7'-7"



STRUCTURE NO. 2

PROJECT #144628-W, TMUA-W 18-16

MAINTENANCE ZONE 6028-W
TUPELO CREEK DRAINAGE

CITY OF TULSA, OKLAHOMA
ENGINEERING SERVICES DEPARTMENT

PLANS AND ESTIMATE PREPARED BY:
NEO DESIGN LLC

REVISION	BY	DATE

PLAN SCALE N/A
PROFILE SCALE
HORIZONTAL N/A
VERTICAL N/A
DRAWN
DESIGNED
SURVEY
PROJ. MGR.
LEAD ENGR.
FIELD MGR.
RECOMMENDED:
DESIGN MANAGER
FILE:
DRAWING:
ATLAS PAGE NO: 235
APPROVED:
CITY ENGINEER
DATE
SHEET 26 OF 161 SHEETS

N:\JOBS\Meshek\MZ 6028-W\DWG\MZ6028W-STRUCTURE NO.4.dwg, STR2-1, 6/17/2020 10:32:36 AM

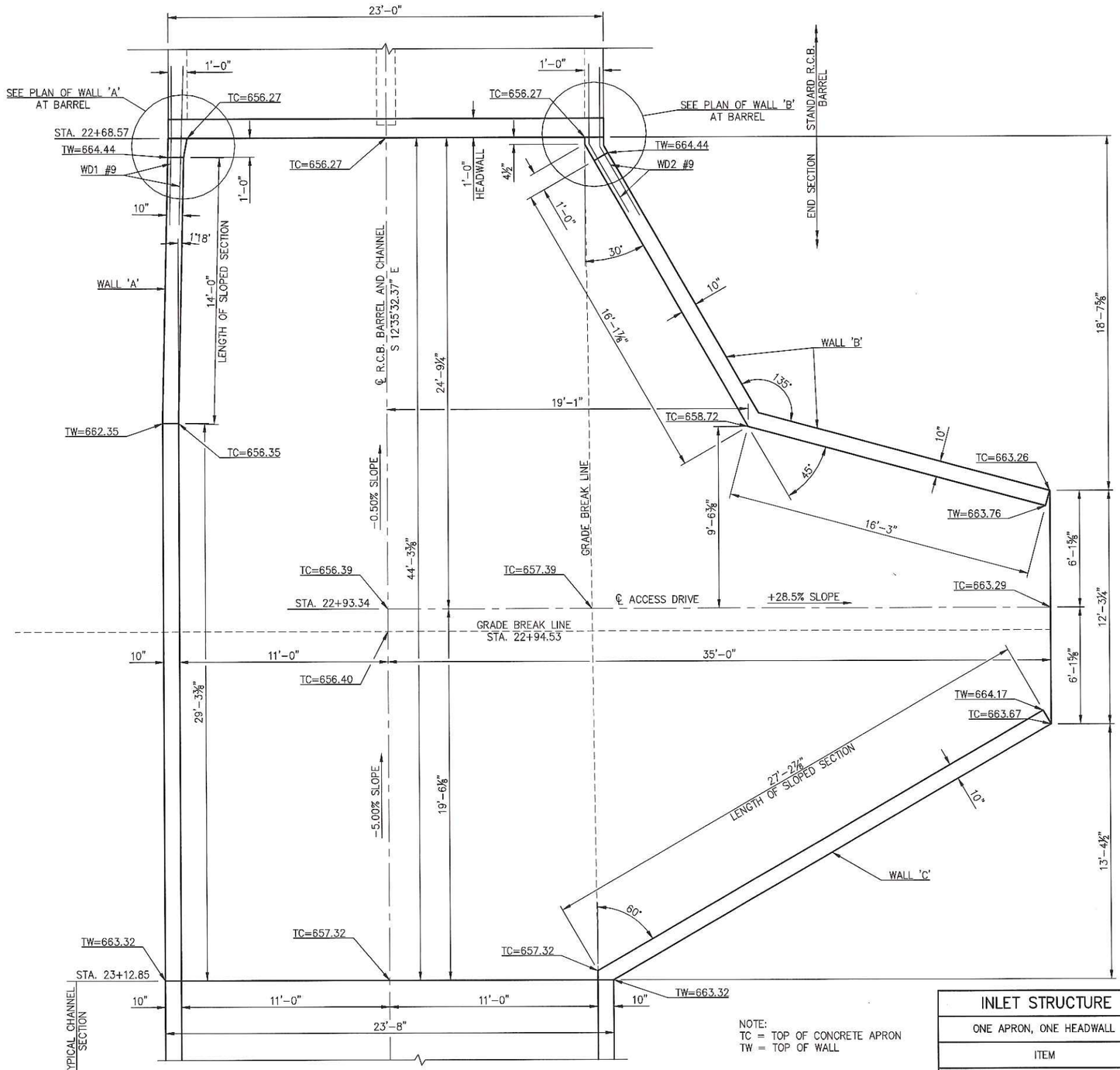

2 – 10'x6' INLET STRUCTURE
END SECTION PLAN

NOTE:
TC = TOP OF CONCRETE APRON
TW = TOP OF WALL

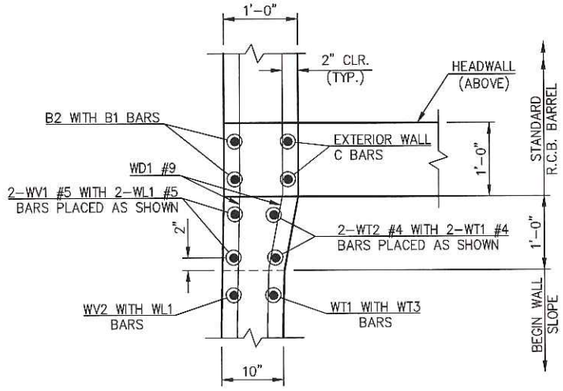

PLAN OF WALL 'A' AT BARREL

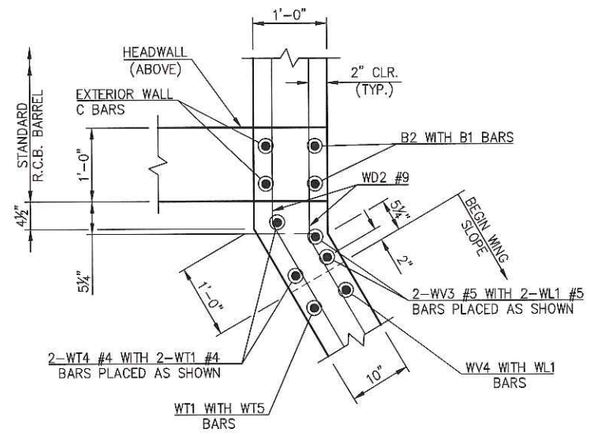

PLAN OF WALL 'B' AT BARREL

INLET STRUCTURE QUANTITIES		
ONE APRON, ONE HEADWALL AND THREE WINGS		
ITEM	UNIT	TOTAL
CLASS AA CONCRETE	C.Y.	72.20
REINFORCING STEEL	LB.	9,560.00

NOTE:
SEE "RCB CULVERTS – BARREL DETAILS 10'–0" SPAN – DOUBLE CELL 2 FT. TO 12 FT. FILL STD. RCB–C2–10(2–12)" FOR ADDITIONAL INFORMATION.

STEPHEN NICHOLAS 28327 LICENSED PROFESSIONAL ENGINEER OKLAHOMA
7-30-20

STRUCTURE NO. 3
(SHEET NO. 1 OF 4)

PROJECT #144628-W, TMUA-W 18-16

MAINTENANCE ZONE 6028-W
TUPELO CREEK DRAINAGE

CITY OF TULSA, OKLAHOMA
ENGINEERING SERVICES DEPARTMENT

PLANS AND ESTIMATE PREPARED BY:
NEO DESIGN LLC

REVISION	BY	DATE

PLAN SCALE: N/A
PROFILE SCALE: HORIZONTAL N/A, VERTICAL N/A
DRAWN | DESIGNED | SURVEY | PROJ. MGR. | LEAD ENGR. | FIELD MGR. | RECOMMENDED: DESIGN MANAGER
APPROVED: CITY ENGINEER
FILE: DRAWING: DATE
ATLAS PAGE NO: 235
SHEET 27 OF 161 SHEETS

N:\JOBS\Mesheki\MZ 6028-W\DWG\MZ6028W-STRUCTURE NO.4.dwg, STR3-1, 7/30/2020 6:58:34 PM

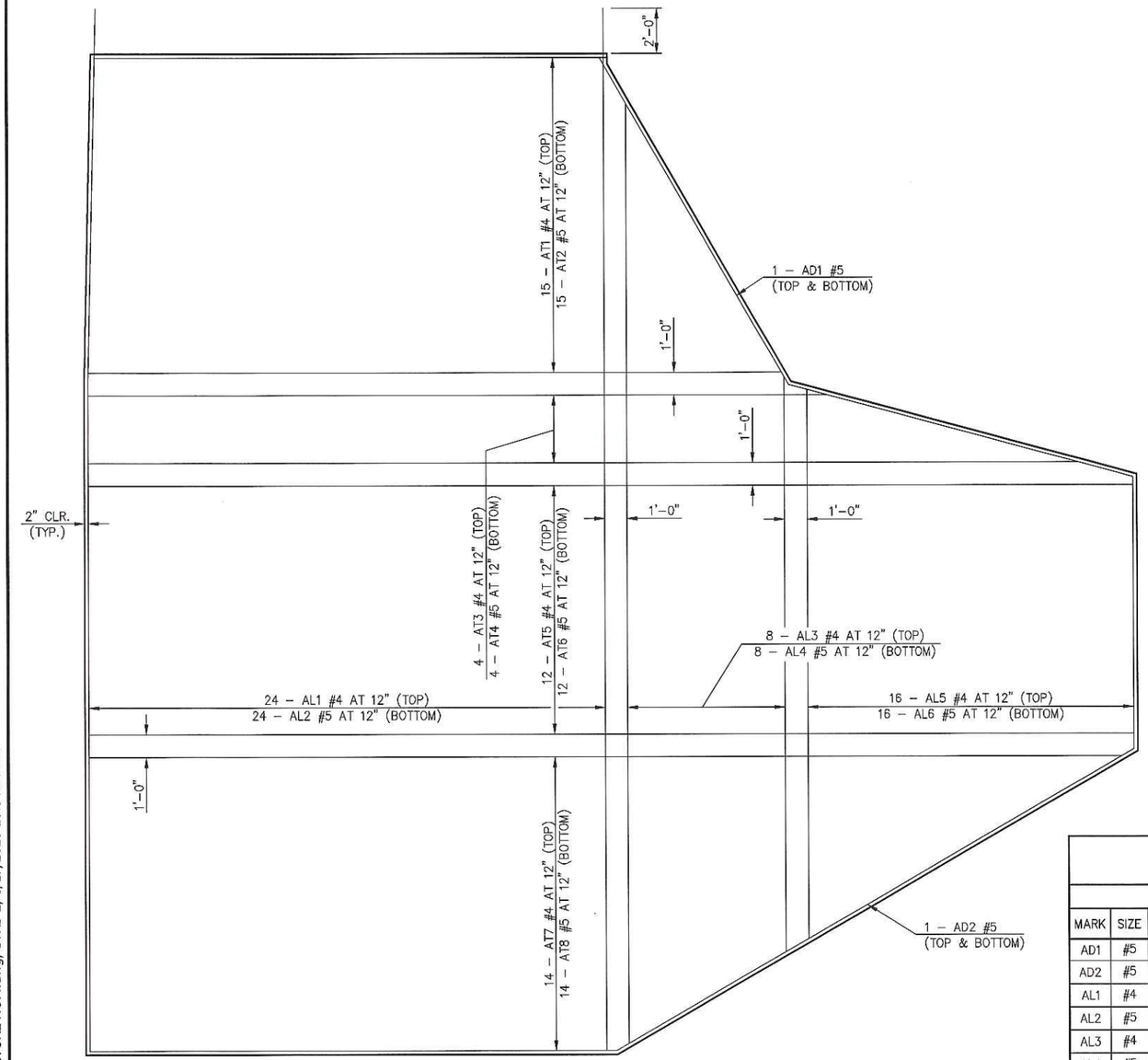

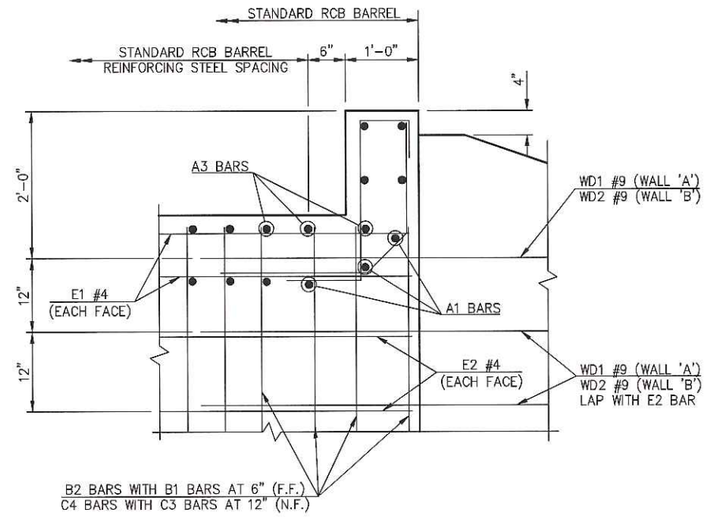

① HEADWALL DETAIL AT EXTERIOR WALL

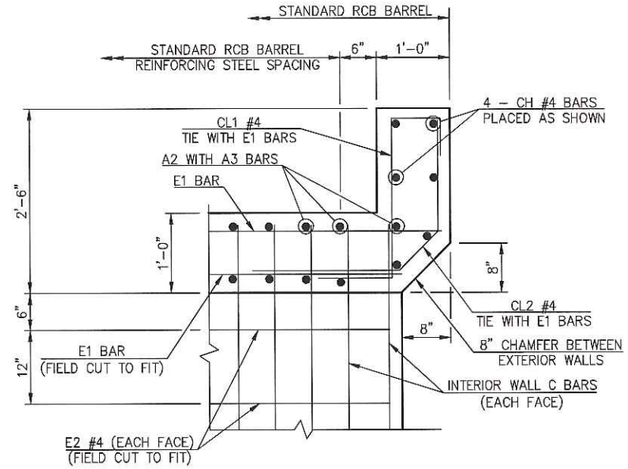

① HEADWALL DETAIL AT INTERIOR WALL

APRON & HEADWALL BAR LIST

ONE APRON AND ONE HEADWALL

MARK	SIZE	QTY.	FORM	LENGTH	VARIANCE
AD1	#5	2	BNT.	32'–7"	–
AD2	#5	2	STR.	26'–7"	
AL1	#4	24	STR.	46'–8"	–
AL2	#5	24	STR.	46'–8"	–
AL3	#4	8	STR.	33'–4" AVG.	25'–1" TO 41'–7"
AL4	#5	8	STR	33'–4" AVG.	25'–1" TO 41'–7"
AL5	#4	16	STR.	18'–1½" AVG.	12'–0" TO 24'–3"
AL6	#5	16	STR.	18'–1½" AVG.	12'–0" TO 24'–3"
AT1	#4	15	STR.	26'–10" AVG.	22'–10" TO 30'–10"
AT2	#5	15	STR.	26'–10" AVG.	22'–10" TO 30'–10"
AT3	#4	4	STR.	38'–5" AVG.	32'–10" TO 44'–0"
AT4	#5	4	STR.	38'–5" AVG.	32'–10" TO 44'–0"
AT5	#4	12	STR.	46'–6"	–
AT6	#5	12	STR.	46'–6"	–
AT7	#4	14	STR.	34'–8" AVG.	23'–5" TO 45'–11"
AT8	#5	14	STR.	34'–8" AVG.	23'–5" TO 45'–11"
CH	#4	4	STR.	22'–8"	–
CL1	#4	26	BNT.	4'–4"	–
CL2	#4	26	BNT.	4'–3"	–

2 – 10'x6' INLET STRUCTURE APRON REINFORCING

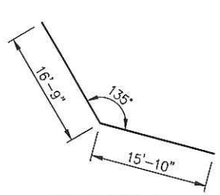

AD1 #5 X 32'–7"

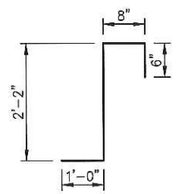

CL1 #4 X 4'–4"

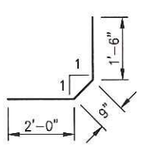

CL2 #4 X 4'–3"

① FOR FURTHER INFORMATION REGARDING END SECTION BARS A, B, C, E1, AND E2, REFER TO "RCB CULVERTS – BARREL DETAILS 10'–0" SPAN – DOUBLE CELL 2 FT. TO 12 FT. FILL STD. RCB–C2–10(2–12)".



STRUCTURE NO. 3
(SHEET NO. 2 OF 4)

PROJECT #144628-W, TMUA-W 18-16

MAINTENANCE ZONE 6028-W
TUPELO CREEK DRAINAGE

CITY OF TULSA, OKLAHOMA
ENGINEERING SERVICES DEPARTMENT

PLANS AND ESTIMATE PREPARED BY:
NEO DESIGN LLC

REVISION	BY	DATE

PLAN SCALE: N/A
PROFILE SCALE: HORIZONTAL N/A, VERTICAL N/A
DRAWN
DESIGNED
SURVEY
PROJ. MGR.
LEAD ENGR.
FIELD MGR.
RECOMMENDED:
DESIGN MANAGER
APPROVED:
CITY ENGINEER
FILE:
DRAWING:
DATE
ATLAS PAGE NO: 235
SHEET 28 OF 161 SHEETS

N:\JOBS\Meshek\MZ 6028-W\DWG\MZ6028W-STRUCTURE NO.4.dwg, STR3-2, 6/17/2020 10:34:26 AM

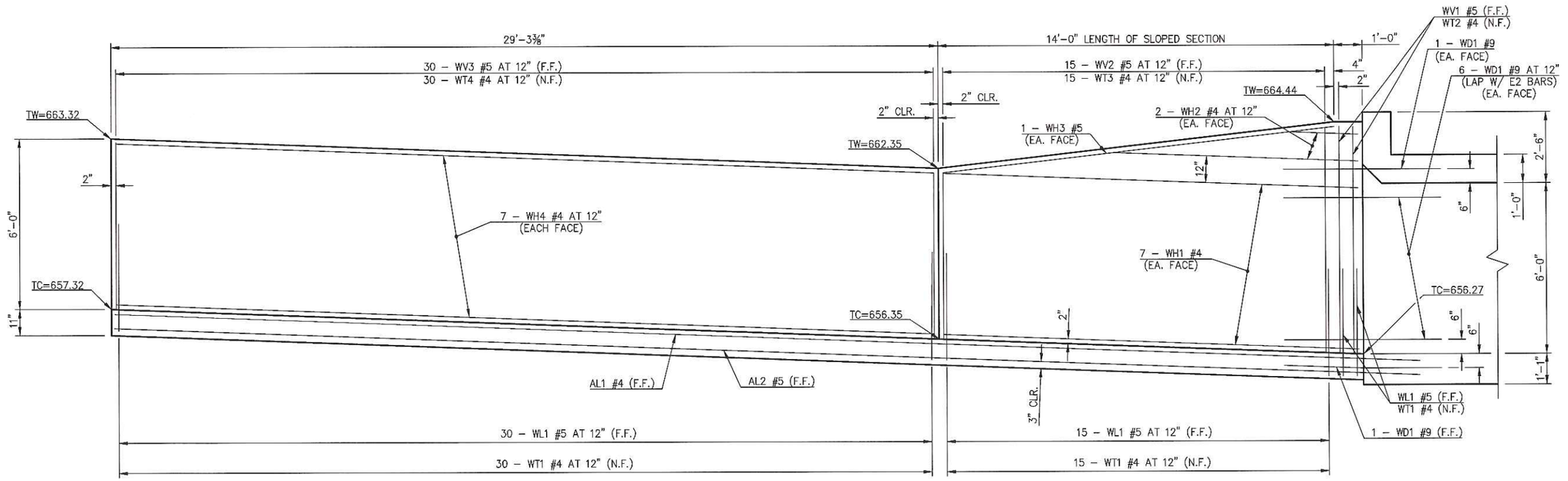

WALL 'A' ELEVATION

NOTE:
F.F. = FAR FACE
N.F. = NEAR FACE
TC = TOP OF CONCRETE APRON
TW = TOP OF WALL

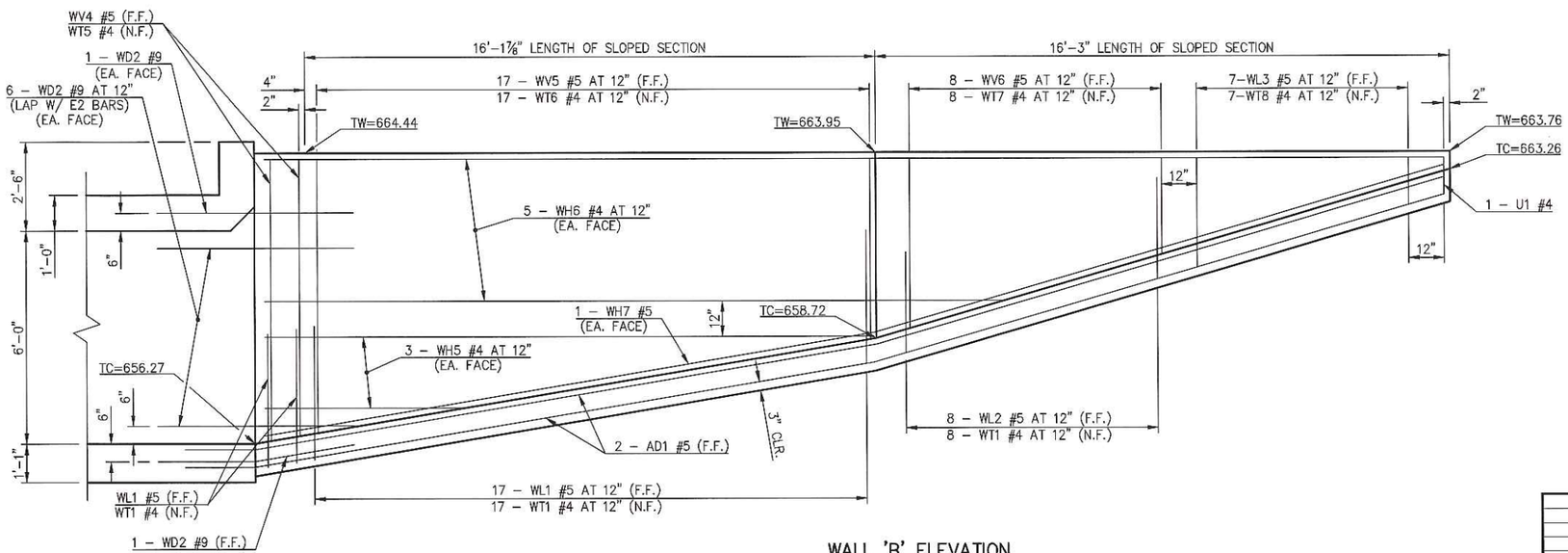

WALL 'B' ELEVATION



STRUCTURE NO. 3
(SHEET NO. 3 OF 4)

PROJECT #144628-W, TMUA-W 18-16

MAINTENANCE ZONE 6028-W
TUPELO CREEK DRAINAGE

CITY OF TULSA, OKLAHOMA
ENGINEERING SERVICES DEPARTMENT

PLANS AND ESTIMATE PREPARED BY:
NEO DESIGN LLC

REVISION	BY	DATE

PLAN SCALE: N/A
PROFILE SCALE: HORIZONTAL N/A; VERTICAL N/A
DRAWN | DESIGNED | SURVEY | PROJ. MGR. | LEAD ENGR. | FIELD MGR. | RECOMMENDED: DESIGN MANAGER
APPROVED: CITY ENGINEER
FILE: | DRAWING: | DATE
ATLAS PAGE NO: 235
SHEET 29 OF 161 SHEETS

N:\JOBS\Meshek\MZ 6028-W\DWG\MZ6028W-STRUCTURE NO.4.dwg, STR3-3, 7/30/2020 6:57:59 PM

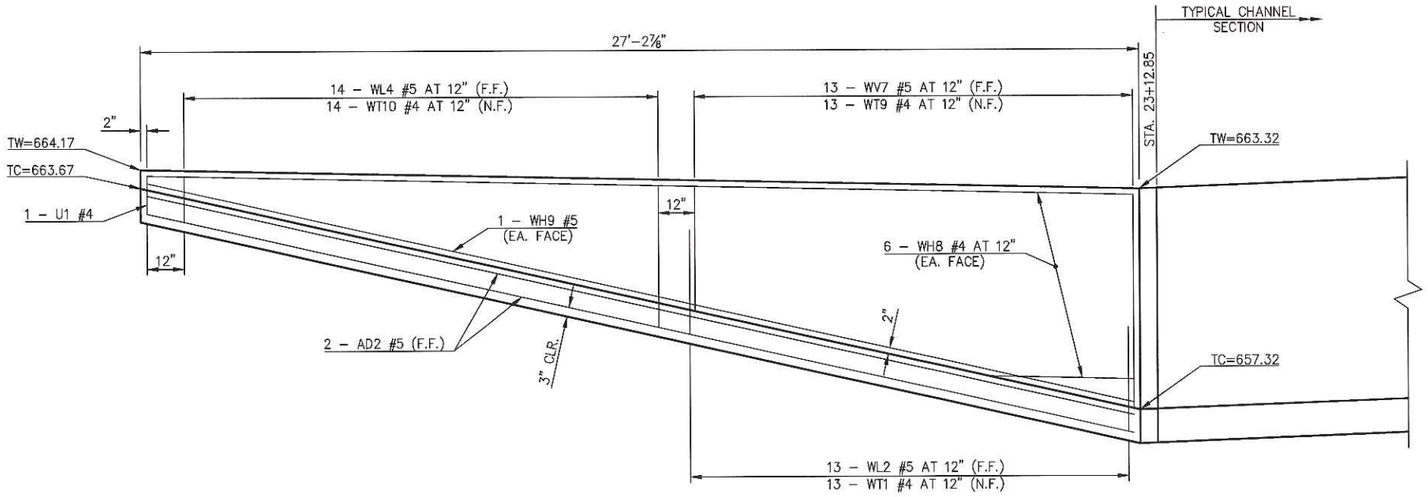

WALL 'C' ELEVATION

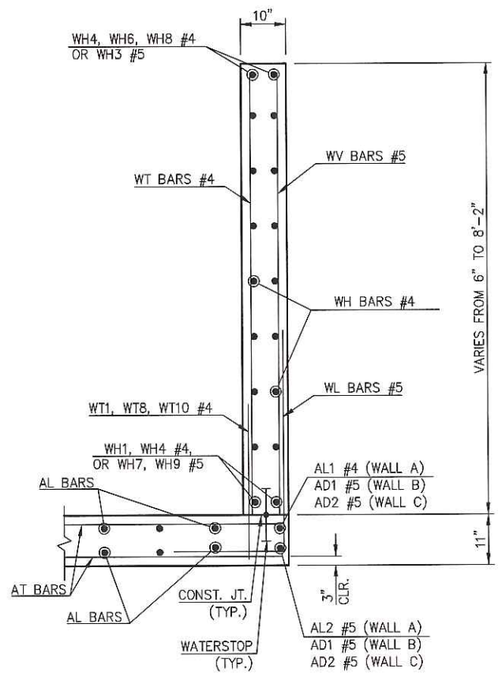

TYPICAL SECTION THRU WING

WALL 'A' BAR LIST

MARK	SIZE	QTY.	FORM	LENGTH	VARIANCE
WD1	#9	15	STR.	8'-4"	-
WH1	#4	14	STR.	14'-8"	-
(1) WH2	#4	4	STR.	5'-6" AVG.	2'-5" TO 8'-7"
WH3	#5	2	STR.	13'-11"	-
WH4	#4	14	STR.	28'-11"	-
WL1	#5	47	BNT.	8'-6"	-
WT1	#4	47	STR.	2'-10"	-
WT2	#4	2	STR.	7'-11"	-
WT3	#4	15	STR.	6'-10½" AVG.	5'-10" TO 7'-11"
WT4	#4	30	STR.	5'-10"	-
WV1	#5	2	STR.	7'-11"	-
WV2	#5	15	STR.	6'-10½" AVG.	5'-10" TO 7'-11"
WV3	#5	30	STR.	5'-10"	-

(1) TWO SETS OF 2 BARS

WALL 'B' BAR LIST

MARK	SIZE	QTY.	FORM	LENGTH	VARIANCE
WD2	#9	15	BNT.	8'-4"	-
(1) WH5	#4	6	STR.	11'-5" AVG.	5'-8" TO 17'-2"
(2) WH6	#4	10	BNT.	27'-1" AVG.	20'-10" TO 33'-4"
WH7	#5	2	BNT.	34'-3"	-
WL1	#5	19	BNT.	8'-6"	-
WL2	#5	8	BNT.	4'-10"	-
WL3	#5	7	BNT.	4'-2" AVG.	3'-4" TO 5'-0"
WT1	#4	27	STR.	2'-10"	-
WT5	#4	2	STR.	7'-10" AVG.	7'-9" TO 7'-11"
WT6	#4	17	STR.	6'-4½" AVG.	5'-1" TO 7'-8"
WT7	#4	8	STR.	3'-8½" AVG.	2'-8" TO 4'-9"
WT8	#4	7	STR.	2'-2" AVG.	1'-4" TO 3'-0"
WV4	#5	2	STR.	7'-10" AVG.	7'-9" TO 7'-11"
WV5	#5	17	STR.	6'-4½" AVG.	5'-1" TO 7'-8"
WV6	#5	8	STR.	3'-8½" AVG.	2'-8" TO 4'-9"
U1	#4	1	BNT.	2'-6"	-

(1) TWO SETS OF 3 BARS
(2) TWO SETS OF 5 BARS

WALL 'C' BAR LIST

MARK	SIZE	QTY.	FORM	LENGTH	VARIANCE
(1) WH8	#4	12	STR.	15'-5" AVG.	3'-11" TO 26'-11"
WH9	#5	2	STR.	27'-6"	-
WL2	#5	13	BNT.	4'-10"	-
WL4	#5	14	BNT.	5'-0" AVG.	4'-2" TO 5'-10"
WT1	#4	13	STR.	2'-10"	-
WT9	#4	13	STR.	4'-6½" AVG.	3'-4" TO 5'-9"
WT10	#4	14	STR.	2'-6" AVG.	1'-2" TO 3'-10"
WV7	#5	13	STR.	4'-6½" AVG.	3'-4" TO 5'-9"
U1	#4	1	BNT.	2'-6"	-

(1) TWO SETS OF 6 BARS

NOTE:
INSTALL 6" RIBBED STYLE OR DUMBBELL STYLE PVC WATERSTOP FOR THE FULL LENGTH OF CONSTRUCTION JOINTS. INCLUDE COST IN OTHER ITEMS OF WORK.

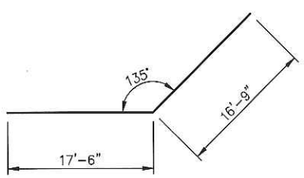

WH7 #5 X 34'-3"

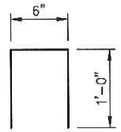

U1 #4 X 2'-6"

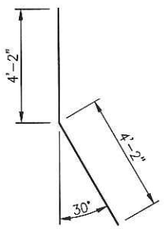

WD2 #9 X 8'-4"

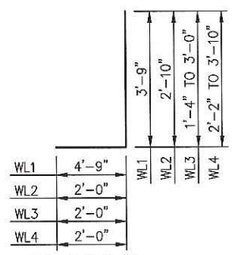

WL1 #5 X 8'-6"
WL2 #5 X 4'-10"
WL3 #5 X 4'-2" AVG.
WL4 #5 X 5'-0" AVG.

LICENSED PROFESSIONAL ENGINEER
STEPHEN NICHOLAS MESHEK
21327
OKLAHOMA
7-30-20

REVISION	BY	DATE

PLAN SCALE N/A	DRAWN		APPROVED:
	DESIGNED		
	SURVEY		
PROFILE SCALE	PROJ. MGR.		
HORIZONTAL N/A	LEAD ENGR.		
	FIELD MGR.		
VERTICAL N/A	RECOMMENDED:		
	DESIGN MANAGER		CITY ENGINEER
FILE:	DRAWING:		DATE
ATLAS PAGE NO: 235			SHEET 30 OF 161 SHEETS

STRUCTURE NO. 3
(SHEET NO. 4 OF 4)

PROJECT #144628-W, TMUA-W 18-16

MAINTENANCE ZONE 6028-W
TUPELO CREEK DRAINAGE

CITY OF TULSA, OKLAHOMA
ENGINEERING SERVICES DEPARTMENT

PLANS AND ESTIMATE PREPARED BY:
NEO DESIGN LLC

N:\JOBS\Meshek\MZ 6028-W\DWG\MZ6028W-STRUCTURE NO.4.dwg, STR3-4, 7/30/2020 6:52:35 PM

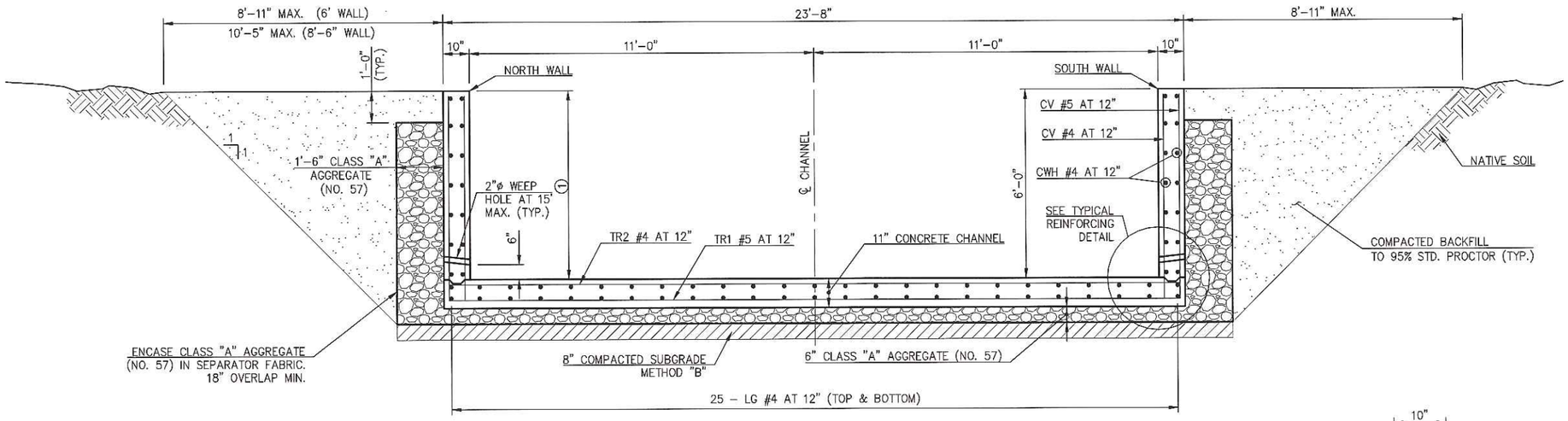

CONCRETE CHANNEL – TYPICAL SECTION

① 6'-0" WALL – STA. 23+12.85 TO STA. 27+60.00
STA. 29+31.00 TO STA. 33+50.02
8'-6" WALL – STA. 27+60.00 TO STA. 29+31.00

NOTES:

1. ALL CONSTRUCTION AND MATERIAL REQUIREMENTS SHALL BE IN ACCORDANCE WITH THE 2009 OKLAHOMA STANDARD SPECIFICATIONS FOR HIGHWAY CONSTRUCTION.
2. CONSTRUCT CHANNEL WITH CLASS AA CONCRETE (F'c = 4 KSI) AND GRADE 60 REINFORCING STEEL.
3. CHAMFER ALL CONCRETE EDGES 1½" UNLESS OTHERWISE SHOWN OR NOTED. ALL CHAMFER STRIPS SHALL BE SIZED LUMBER.
4. ALL REINFORCING STEEL SHALL HAVE A 2" MINIMUM CLEAR COVER UNLESS OTHERWISE SHOWN.
5. JOINT LAYOUT MAY BE MODIFIED AS APPROVED BY THE ENGINEER.
6. USE CLASS "A" AGGREGATE (NO. 57) MEETING THE COARSE AGGREGATE REQUIREMENT OF SECTION 701.06 OF THE STANDARD SPECIFICATION.
7. ENCASE CLASS "A" AGGREGATE IN SEPARATOR FABRIC. LAP SEPARATOR FABRIC A MINIMUM OF 18"

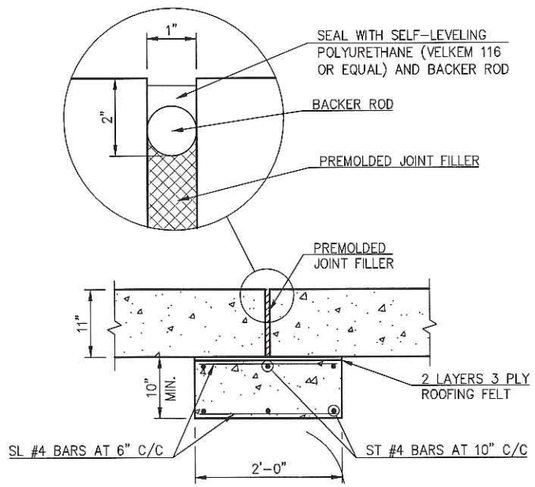

TRANSVERSE CONSTRUCTION AND EXPANSION JOINT IN BOTTOM SLAB

MINIMUM SPACING SHALL BE 80' C/C

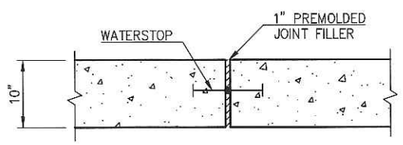

TRANSVERSE EXPANSION JOINT IN WALL

NOTE:
INSTALL 6" RIBBED STYLE OR DUMBBELL STYLE PVC WATERSTOP FOR THE FULL LENGTH OF CONSTRUCTION JOINTS. INCLUDE COST IN OTHER ITEMS OF WORK.

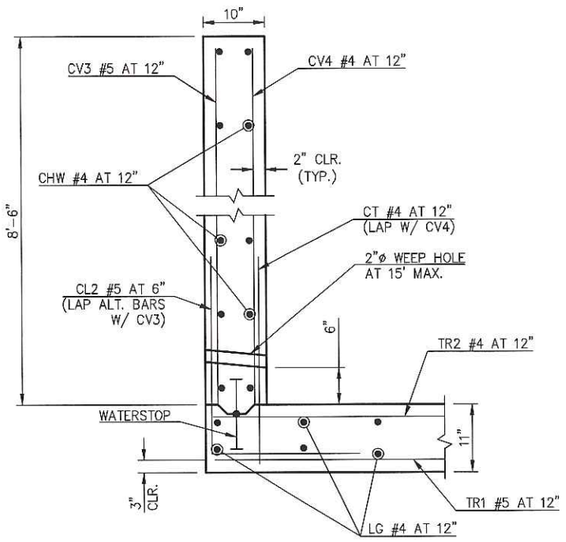

TYPICAL REINFORCING DETAIL – 8'-6" WALL

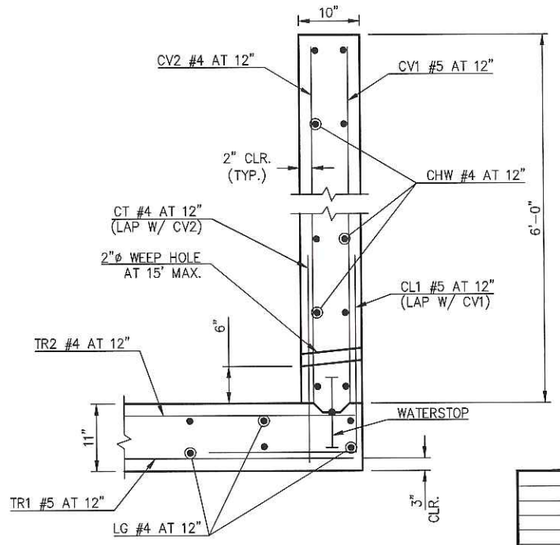

TYPICAL REINFORCING DETAIL – 6'-0" WALL

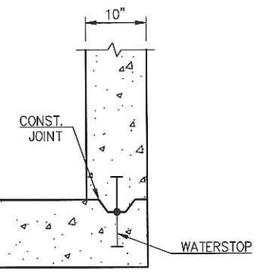

CONSTRUCTION JOINT

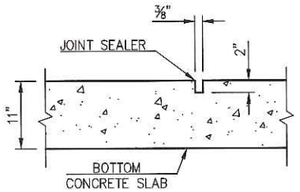

CONTRACTION JOINT IN BOTTOM SLAB

JOINTS SHALL BE SPACED AT 20' C/C

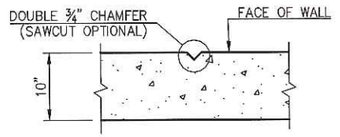

CONTRACTION JOINT IN WALL



CONCRETE CHANNEL
(SHEET NO. 1 OF 2)

PROJECT #144628-W, TMUA-W 18-16

MAINTENANCE ZONE 6028-W
TUPELO CREEK DRAINAGE

CITY OF TULSA, OKLAHOMA
ENGINEERING SERVICES DEPARTMENT

PLANS AND ESTIMATE PREPARED BY:
NEO DESIGN LLC

REVISION	BY	DATE

PLAN SCALE: N/A
PROFILE SCALE: HORIZONTAL N/A, VERTICAL N/A
DRAWN
DESIGNED
SURVEY
PROJ. MGR.
LEAD ENGR.
FIELD MGR.
RECOMMENDED:
DESIGN MANAGER
APPROVED:
CITY ENGINEER
FILE:
DRAWING:
DATE
ATLAS PAGE NO: 235
SHEET 31 OF 161 SHEETS

N:\JOBS\Meshek\MZ 6028-W\DWG\MZ6028W-STRUCTURE NO.4.dwg, TYP CHANNEL1, 7/20/2020 11:48:02 AM

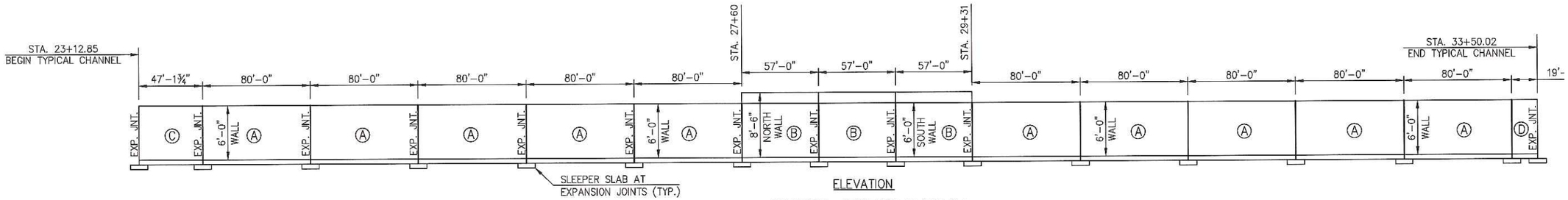

ELEVATION

CHANNEL SECTION DIAGRAM

SECTION Ⓐ BAR LIST
(ONE SHOWN, TEN REQUIRED)

MARK	SIZE	QTY.	FORM	LENGTH
CL1	#5	162	BNT.	4'-10"
CT	#4	162	STR.	2'-10"
CV1	#5	162	STR.	5'-10"
CV2	#4	162	STR.	5'-10"
① CWH	#4	28	STR.	81'-8"
① LG	#4	50	STR.	81'-8"
TR1	#5	81	STR.	23'-4"
TR2	#4	81	STR.	23'-4"

① INCLUDES ONE 2'-0" LAP.

SECTION Ⓑ BAR LIST
(ONE SHOWN, TWO REQUIRED)

MARK	SIZE	QTY.	FORM	LENGTH
CL1	#5	58	BNT.	4'-10"
CL2	#5	115	BNT.	8'-6"
CT	#4	116	STR.	2'-10"
CV1	#5	58	STR.	5'-10"
CV2	#4	58	STR.	5'-10"
CV3	#5	58	STR.	8'-4"
CV4	#4	58	STR.	8'-4"
CWH	#4	32	STR.	56'-8"
LG	#4	50	STR.	56'-8"
TR1	#5	58	STR.	23'-4"
TR2	#4	58	STR.	23'-4"

SECTION Ⓒ BAR LIST
(ONE SHOWN, ONE REQUIRED)

MARK	SIZE	QTY.	FORM	LENGTH
CL1	#5	96	BNT.	4'-10"
CT	#4	96	STR.	2'-10"
CV1	#5	96	STR.	5'-10"
CV2	#4	96	STR.	5'-10"
CWH	#4	28	STR.	46'-9"
LG	#4	50	STR.	46'-9"
TR1	#5	48	STR.	23'-4"
TR2	#4	48	STR.	23'-4"

SECTION Ⓓ BAR LIST
(ONE SHOWN, ONE REQUIRED)

MARK	SIZE	QTY.	FORM	LENGTH
CL1	#5	40	BNT.	4'-10"
CT	#4	40	STR.	2'-10"
CV1	#5	40	STR.	5'-10"
CV2	#4	40	STR.	5'-10"
CWH	#4	28	STR.	18'-8"
LG	#4	50	STR.	18'-8"
TR1	#5	20	STR.	23'-4"
TR2	#4	20	STR.	23'-4"

SLEEPER SLAB BAR LIST
(ONE SHOWN, 16 REQUIRED)

MARK	SIZE	QTY.	FORM	LENGTH
SL	#4	96	STR.	1'-8"
ST	#4	6	STR.	23'-4"

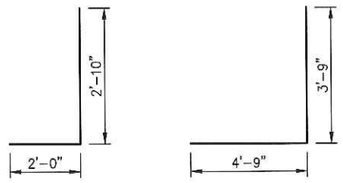

CL1 #5 X 4'-10"

CL2 #5 X 8'-6"

CHANNEL QUANTITIES
STA. 23+12.85 TO STA. 33+50.02

ITEM	UNIT	TOTAL
CLASS AA CONCRETE	CY	1,254.10
REINFORCING STEEL	LB	138,990.00
SEPARATOR FABRIC	SY	8,840.00
CLASS "A" AGGREGATE (NO. 57)	CY	1,121.10



CONCRETE CHANNEL
(SHEET NO. 2 OF 2)

PROJECT #144628-W, TMUA-W 18-16

MAINTENANCE ZONE 6028-W
TUPELO CREEK DRAINAGE

CITY OF TULSA, OKLAHOMA
ENGINEERING SERVICES DEPARTMENT

PLANS AND ESTIMATE PREPARED BY:
NEO DESIGN LLC

REVISION	BY	DATE

PLAN SCALE N/A
PROFILE SCALE HORIZONTAL N/A
PROFILE SCALE VERTICAL N/A
DRAWN
DESIGNED
SURVEY
PROJ. MGR.
LEAD ENGR.
FIELD MGR.
RECOMMENDED:
DESIGN MANAGER
FILE: DRAWING:
ATLAS PAGE NO: 235

APPROVED:
CITY ENGINEER
DATE
SHEET 32 OF 161 SHEETS

N:\JOBS\Meshek\MZ 6028-W\DWG\MZ6028W-STRUCTURE NO.4.dwg, TYP CHANNEL2, 7/20/2020 11:48:48 AM

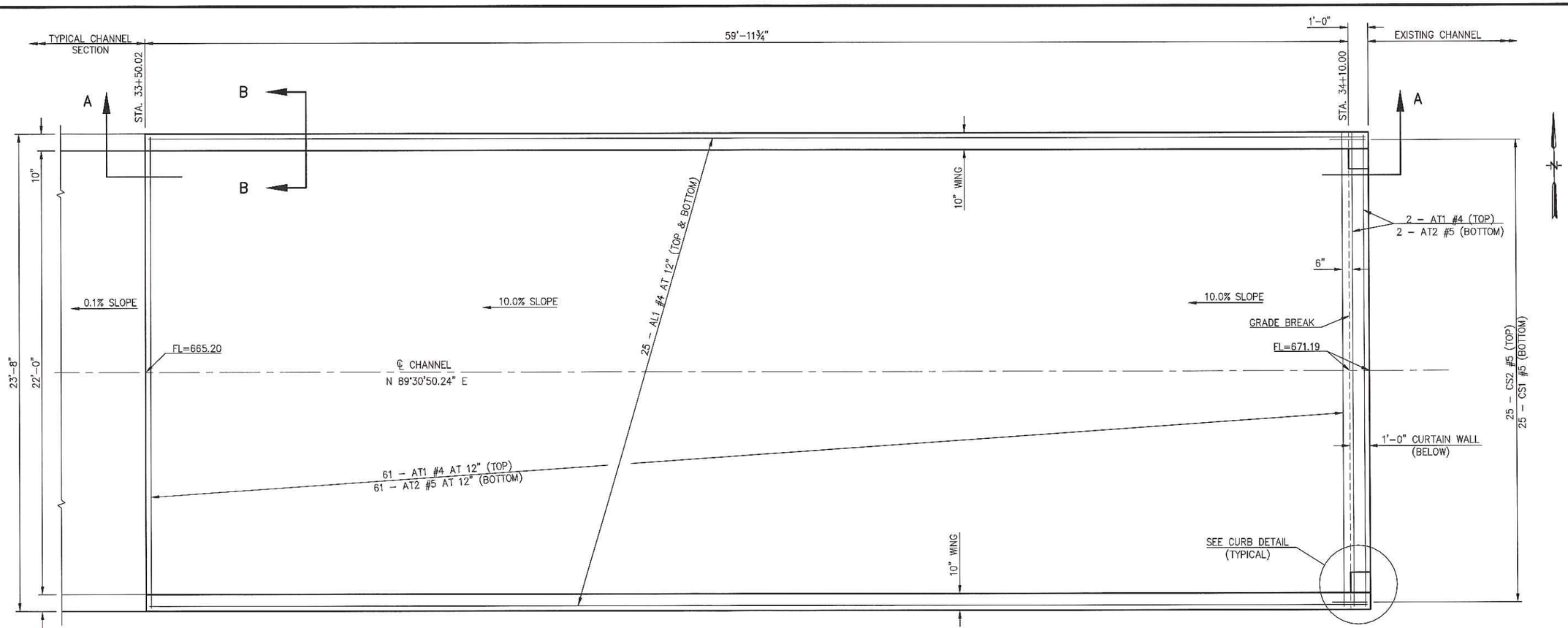

DROP STRUCTURE PLAN WITH APRON REINFORCING

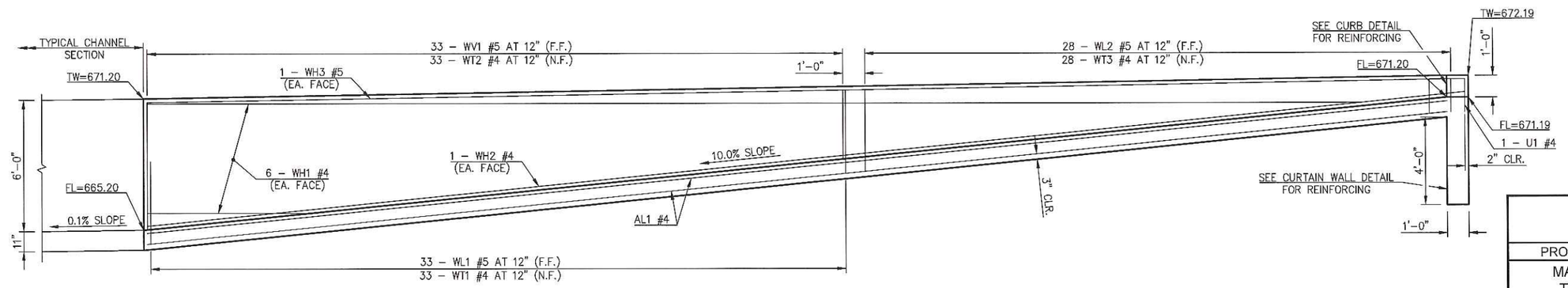

DROP STRUCTURE SECTION A-A

DROP STRUCTURE QUANTITIES		
ONE APRON, ONE CURTAIN WALL AND TWO WINGS		
ITEM	UNIT	TOTAL
CLASS AA CONCRETE	C.Y.	65.60
REINFORCING STEEL	LB.	7,620.00

LICENSED PROFESSIONAL ENGINEER STEPHEN L. NICHOLS 28327 OKLAHOMA
7-30-20

STRUCTURE NO. 4
(SHEET NO. 1 OF 2)

PROJECT #144628-W, TMUA-W 18-16

MAINTENANCE ZONE 6028-W
TUPELO CREEK DRAINAGE

CITY OF TULSA, OKLAHOMA
ENGINEERING SERVICES DEPARTMENT

PLANS AND ESTIMATE PREPARED BY:
NEO DESIGN LLC

REVISION	BY	DATE

PLAN SCALE N/A
PROFILE SCALE
HORIZONTAL N/A
VERTICAL N/A
DRAWN
DESIGNED
SURVEY
PROJ. MGR.
LEAD ENGR.
FIELD MGR.
RECOMMENDED:
DESIGN MANAGER
FILE:
DRAWING:
APPROVED:
CITY ENGINEER
DATE
ATLAS PAGE NO: 235
SHEET 33 OF 161 SHEETS

N:\JOBS\Meshek\MZ 6028-W\DWG\MZ6028W-STRUCTURE NO.4.dwg, STR4-1, 7/20/2020 11:47:28 AM

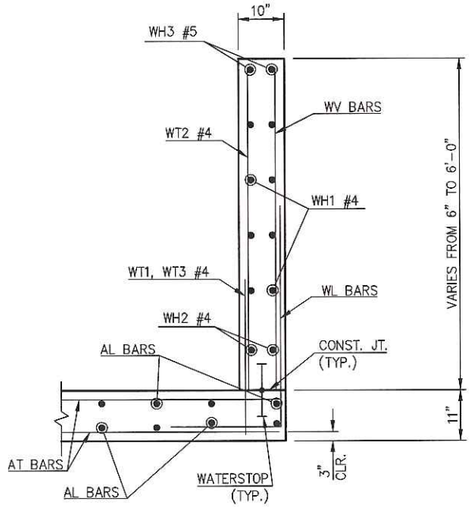

SECTION B–B THRU WING

NOTE:
INSTALL 6" RIBBED STYLE OR DUMBBELL STYLE PVC WATERSTOP FOR THE FULL LENGTH OF CONSTRUCTION JOINTS. INCLUDE COST IN OTHER ITEMS OF WORK.

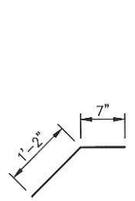

CB1 #4 X 1'-9"

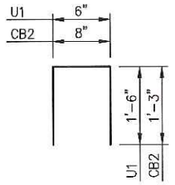

U1 #4 X 3'-6"
CB2 #4 X 3'-2"

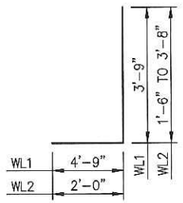

WL1 #5 X 8'-6"
WL2 #5 X 4'-7" AVG.

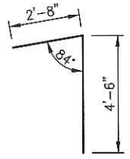

CS1 #5 X 7'-2"

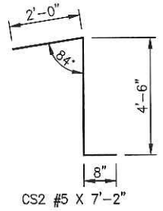

CS2 #5 X 7'-2"

DROP STRUCTURE BAR LIST					
MARK	SIZE	QTY.	FORM	LENGTH	VARIANCE
① AL1	#4	50	STR.	62'–3"	–
AT1	#4	63	STR.	23'–4"	–
AT2	#5	63	STR.	23'–4"	–
CB1	#4	4	BNT.	1'–9"	–
CB2	#4	2	BNT.	3'–2"	–
CS1	#5	25	BNT.	7'–2"	–
CS2	#5	25	BNT.	7'–2"	–
CT1	#4	8	STR.	23'–4"	–
② WH1	#4	24	STR.	31'–7½" AVG.	7'–6" TO 55'–9"
① WH2	#4	4	STR.	63'–0"	–
③ WH3	#5	4	STR.	63'–2"	–
WL1	#5	66	BNT.	8'–6"	–
④ WL2	#5	56	BNT.	4'–7" AVG.	3'–6" TO 5'–8"
WT1	#4	66	STR.	2'–10"	–
⑤ WT2	#4	66	STR.	4'–5" AVG.	3'–1" TO 5'–9"
④ WT3	#4	56	STR.	2'–7" AVG.	1'–6" TO 3'–8"
⑤ WV1	#5	66	STR.	4'–5" AVG.	3'–1" TO 5'–9"
U1	#4	2	BNT.	3'–6"	–

① INCLUDES ONE 2'–0" LAP
② FOUR SETS OF 6 BARS
③ INCLUDES ONE 2'–6" LAP
④ TWO SETS OF 28 BARS
⑤ TWO SETS OF 33 BARS

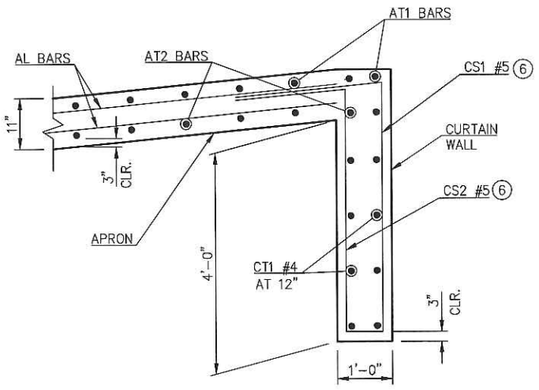

CURTAIN WALL DETAIL
⑥ CS1 AND CS2 BARS ALIGN WITH AL BARS IN APRON SLAB.

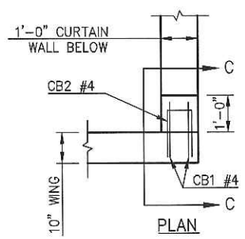

PLAN

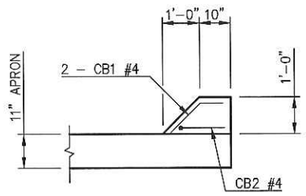

SECTION C–C

CURB DETAIL
(WING, APRON, & CURTAINL REINFORCEMENT NOT SHOWN FOR CLARITY)

STRUCTURE NO. 4
(SHEET NO. 2 OF 2)

PROJECT #144628-W, TMUA-W 18-16

MAINTENANCE ZONE 6028-W
TUPELO CREEK DRAINAGE

CITY OF TULSA, OKLAHOMA
ENGINEERING SERVICES DEPARTMENT

PLANS AND ESTIMATE PREPARED BY:
NEO DESIGN LLC

7-30-20

REVISION	BY	DATE

PLAN SCALE: N/A
PROFILE SCALE: HORIZONTAL N/A, VERTICAL N/A
DRAWN / DESIGNED / SURVEY / PROJ. MGR. / LEAD ENGR. / FIELD MGR. / RECOMMENDED: DESIGN MANAGER
APPROVED: CITY ENGINEER
FILE: DRAWING: DATE
ATLAS PAGE NO: 235
SHEET 34 OF 161 SHEETS

N:\JOBS\Meshek\MZ 6028-W\DWG\MZ6028W-STRUCTURE NO.4.dwg, STR4-2, 6/17/2020 10:37:43 AM

PARTICIPATING SUMMARIES

PARTICIPATING DRIVEWAY REMOVAL AND REPLACEMENT SUMMARY

SHEET NO.	STREET	DRIVEWAY NUMBER	STATION	OFFSET	WIDTH (FT)	EXISTING SLOPE (%)	PROPOSED SLOPE (%)	6" CONCRETE (SY)	AGGREGATE BASE (CY)
69	E. 16TH ST. S.	DW-01	112+88.09	29.53 R	16.3	22.8	9.9,1.5,8.8	27.0	4.5
		DW-02	113+48.25	30.45 L	16.2	4.8	9.7,1.5,3.9	28.2	4.7
71	S. 116TH E. AVE.	DW-09	200+69.67	24.98 R	17.6	10.0	8.9	29.2	4.9
74	S. 117TH E. AVE.	DW-26	401+18.45	25.56 L	30.7	6.2	7.9,1.5,8.8	51.0	8.5
		DW-27	401+74.15	25.25 L	16.6	5.4	6.1,1.5,2.1	28.4	4.7
		DW-28	401+79.45	24.75 R	9.5	5.8	3.6,1.5,1.1	17.5	2.9
		DW-29	402+04.66	24.77 R	22.9	5.6	3.9,1.5,5.7	37.0	6.2
		DW-30	402+33.98	25.21 L	20.3	10.2	8.8,1.5,9.5	33.9	5.7
		DW-31	402+86.95	24.82 R	21.8	1.0	2.2,1.5,1.1	35.4	5.9
75	S. 117TH E. AVE.	DW-32	403+05.99	25.17 L	19.4	6.5	5.4,1.5,3.2	30.5	5.1
		DW-33	403+64.82	24.86 R	10.1	2.5	0.1,0.8,3.1	18.2	3.0
		DW-34	404+03.27	112.52 L	11.0	5.8	7.7,1.5,2.5	128.7	21.5

PARTICIPATING RECONSTRUCTION SUMMARY

SHEET NO.	STREET	FROM STATION	TO STATION	SUPERPAVE, TYPE S3 (SY)	SUPERPAVE, TYPE S4 (SY)	SUPERPAVE, TYPE S3 (TONS)	SUPERPAVE, TYPE S4 (TONS)	SUBGRADE METHOD "B" (SY)	AGGREGATE BASE (CY)	SEPARATOR FABRIC (SY)
69	E. 16TH ST. S.	111+86.64	113+96.17	730.6	730.6	204.6	81.8	730.6	243.5	949.8
71	S. 116TH E. AVE	200+16.65	201+04.39	249.3	249.3	69.8	27.9	249.3	83.1	324.1
74	E. 117TH E. AVE	400+16.50	403+00.00	729.7	729.7	204.3	81.7	729.7	243.2	948.6
75	E. 117TH E. AVE	403+00.00	404+45.24	362.8	362.8	101.6	40.6	362.8	120.9	471.6
77	S. 118TH E. AVE	411+44.59	412+20.04	182.5	182.5	51.1	20.4	182.5	60.8	237.3

PARTICIPATING PCC RECONSTRUCTION SUMMARY

SHEET NO.	STREET	FROM STATION	TO STATION	PCC PAVEMENT (SY)	PCC PAVEMENT (CY)	SUBGRADE METHOD "B" (SY)	AGGREGATE BASE (CY)	SEPARATOR FABRIC (SY)
69	E. 16TH ST. S.	111+45.55	111+86.64	146.1	24.4	146.1	16.2	189.9

PARTICIPATING CURB & GUTTER SUMMARY

SHEET NO.	STREET SIDE	FROM STATION	TO STATION	2'-2" COMBINED CURB AND GUTTER (6" BARRIER)
69	LEFT	111+34.00	111+83.23	53.0
	RIGHT	111+59.01	112+74.47	113.5
	LEFT	112+56.57	113+35.66	79.1
	RIGHT	113+00.78	113+11.54	10.8
	LEFT	113+60.66	113+96.17	35.5
	RIGHT	113+86.42	113+96.17	9.8
71	LEFT	200+17.87	200+39.48	33.5
	RIGHT	200+18.02	200+39.58	35.3
	LEFT	200+52.11	201+04.39	48.8
	RIGHT	200+50.94	200+57.37	6.9
	RIGHT	200+81.41	201+04.39	24.5
74	RIGHT	400+18.05	401+70.98	168.5
	LEFT	400+17.99	400+96.21	90.8
	LEFT	401+36.77	401+60.17	23.4
	LEFT	401+85.49	402+19.49	34.0
	RIGHT	402+21.82	402+72.84	51.0
	LEFT	402+48.47	402+91.77	43.3
75	RIGHT	403+03.46	403+56.66	53.2
	LEFT	403+18.20	403+74.87	56.7
	RIGHT	403+75.65	404+45.24	69.6
	LEFT	403+94.86	404+45.24	50.4
77	LEFT	411+44.59	412+20.04	75.3
	RIGHT	411+44.59	412+20.04	75.4

PARTICIPATING MAILBOX SUMMARY

SHEET	STREET	STATION	OFFSET	TYPE
69	11635 E. 16TH ST.	112+83.85	19.64 L	BRICK
	11703 E. 16TH ST.	113+63.44	16.56 L	WOOD
74	1606 E. 117TH E. AVE.	400+82.07	14.90 R	PLASTIC
	1612 E. 117TH E. AVE.	401+69.16	14.84 R	STEEL
	1613 E. 117TH E. AVE.	401+86.26	14.39 L	WOOD
	1618 E. 117TH E. AVE.	402+22.85	15.15 R	STEEL
	1619 E. 117TH E. AVE.	402+48.70	14.81 L	WOOD
75	1628 E. 117TH E. AVE.	403+04.99	15.23 R	WOOD
	1627 E. 117TH E. AVE.	403+21.63	14.12 L	WOOD

PARTICIPATING STREET SIGN SUMMARY

SHEET NO.	SIGN NO.	STREET	STATION	OFFSET	SIGN	STD.	ACTION	SIGN DIMENSIONS (IN X IN)	AREA (SF)	2" SIGN POST (LF)	1-3/4" SIGN POST (LF)	1-1/2" SIGN POST (LF)
69	1	E. 16TH ST.	113+14.90	20.89 R	STOP (R1-1)	608(B)	REMOVE AND REPLACE	30X30	6.25	3	11	
	2		112+23.24	23.19 R	SPEED HUMP (W17-1)		REMOVE AND REPLACE	30X30	6.25	3	11	
71	3	S. 116TH E. AVE.	200+29.06	19.18 R	S. 116TH E. AVE.	608(A)	REMOVE AND REPLACE	6x30	1.25	3	8	1.5
	4				E. 16TH ST.	608(A)	REMOVE AND REPLACE	6x24	1.00			
74	5	S. 117TH E. AVE.	400+37.30	16.38 L	STOP (R1-1)	608(B)	REMOVE AND REPLACE	30X30	6.25	3	11	1.5
	6				E. 16TH ST.	608(A)	REMOVE AND REPLACE	6x24	1.00			
	7				S. 117TH E. AVE.	608(A)	REMOVE AND REPLACE	6x30	1.25			

PARTICIPATING ROADSIDE DEVELOPMENT SUMMARY

EROSION SHEET	STREET	FROM STATION	TO STATION	SOLID SLAB SOD (LIKE-KIND) (SY)	TEMPORARY SILT DIKE (LF)	TEMPORARY SILT FENCE (LF)
48	E. 16TH ST. S.	111+45.55	113+96.17	343.2	121.4	0
49	S. 116TH E. AVE	200+00.00	202+20.00	1925.0	63.3	258.39
50	S. 117TH E. AVE	400+00.00	403+00.00	659.2	32.2	0
51	S. 117TH E. AVE	403+00.00	404+45.24	330.9	70.7	0
52	E. 118TH E. AVE.	411+44.59	412+20.04	200.0	94.2	0
53	BETWEEN S. 117TH E. AVE. AND S. 118TH E. AVE.	17+67.00	20+49.00	1509.7	0.0	0
53	EAST OF S. 118TH E. AVE. TO CHANNEL	20+90.00	26+80.00	2050.3	57.4	0
54	CHANNEL	26+80.00	34+45.00	4554.0	115.1	0

PARTICIPATING SUMMARY OF STRUCTURES

STRUCTURE ID	DESCRIPTION	CLASS AA CONC. (CY)	REINFORCING STEEL (LB)	UNCLASSIFIED EXCAVATION (CY)	AGG. BASE TYPE 'A' (CY)	MANHOLE (EA)
STRUCTURE NO. 1	REINFORCED CONCRETE END SECTION	68.2	14020.0	68.4		
STRUCTURE NO. 2	REINFORCED CONCRETE JUNCTION BOX	17.2	1480.0	29.3	32.8	1
STRUCTURE NO. 3	REINFORCED CONCRETE END SECTION W/ CHANNEL ACCESS	72.2	9560.0	311.4		
STRUCTURE NO. 4	REINFORCED CONCRETE CHANNEL DROP STRUCTURE	65.6	7620.0	72.4		

PARTICIPATING SIDEWALK SUMMARY

SHEET NO.	STREET	FROM STATION	TO STATION	4" P.C. CONCRETE (SY)
69	E. 16TH ST. S.	111+29.63	111+98.79	51.4
		112+38.24	113+40.05	66.6
		113+56.37	113+96.17	22.2
74	S. 117TH E. AVE.	400+77.41	400+80.57	5.3

BENJAMIN W. FLETCHER — 24921 — LICENSED PROFESSIONAL ENGINEER — OKLAHOMA

8/7/2020

PARTICIPATING SUMMARY SCHEDULES

PROJECT #144628-W, TMUA-W 18-16

MAINTENANCE ZONE 6028-W
TUPELO CREEK DRAINAGE

CITY OF TULSA, OKLAHOMA
ENGINEERING SERVICES DEPARTMENT

PLANS AND ESTIMATES PREPARED BY:
Meshek & Associates, L.L.C.
1437 S. Boulder Avenue, Suite 1550 Tulsa, OK 74119 (918)392-5620

REVISION	BY	DATE

PLAN SCALE: N/A
PROFILE SCALE: HORIZONTAL: N/A; VERTICAL: N/A

DRAWN	SCB	08/20
DESIGNED	BWF	08/20
SURVEY	AB	06/18
PROJ. MGR.		
LEAD ENGR.		
FIELD MGR.		
RECOMMENDED DESIGN MANAGER		

APPROVED: CITY ENGINEER
FILE: DRAWING:
DATE:
ATLAS PAGE NO. 235
SHEET 35 OF 161 SHEETS

PRINT DATE: 08/07/2020 M:\City_of_Tulsa\18TUL02_MZ6028_Tupelo_Creek_Drainage\Design\Drawings\18TUL02_SUMMARY_SCHEDULES.dwg

PARTICIPATING SUMMARIES

PARTICIPATING REMOVAL SUMMARY

SHEET NO.	FROM STATION	TO STATION	REMOVING TREES 6" TO 12" IN DIAMETER	REMOVING TREES 13" TO 18" IN DIAMETER	REMOVING TREES 19" TO 24" IN DIAMETER	REMOVING TREES 25" & MORE IN DIAMETER	REMOVAL OF DRAINAGE INLETS	REMOVAL OF MANHOLES	REMOVAL OF EXISTING 66" RCP	REMOVAL OF EXISTING PIPE	REMOVAL OF CONCRETE CHANNEL	REMOVAL OF CONCRETE PAVEMENT	REMOVAL OF ASPHALT PAVEMENT	REMOVAL OF CURB AND GUTTER	REMOVAL OF SIDEWALK	REMOVAL OF CONCRETE DRIVEWAY	REMOVAL OF FENCE
			EA	EA	EA	EA	EA	EA	LF	LF	SY	SY	SY	LF	SY	SY	LF
55	111+45.55	113+96.17	2	0	0	0	3	2	0	329.3	112	145.4	760.2	299.7	76.6	188.2	216.9
56	200+00.00	201+04.39	2	0	0	1	0	0	0	0	0	0	247.6	173	0	122.2	0
57	400+00.00	404+45.24	0	0	0	0	4	1	0	69.7	0	0	1106.6	655.4	5.4	380.4	0
58	411+44.59	412+20.04	0	0	0	0	2	1	0	45	0	0	191.7	151.3	14.8	0	0
60	17+50.00	23+00.00	1	2	3	5	0	0	1079.9	0	52.3	0	0	0	0	0	819.3
61	23+00.00	31+00.00	44	9	6	6	0	0	0	0	1294.7	0	0	0	0	0	1679
62	31+00.00	35+24.00	28	6	1	5	0	0	0	0	0	0	0	0	0	0	349.4

PARTICIPATING FENCE SUMMARY

SHEET NO.	STREET	FROM STATION	TO STATION	FROM OFFSET	TO OFFSET	TYPE	LENGTH (FT)
80	E. 16TH ST. S.	10+58.07	10+68.19	35.42 L	45.56 L	FENCE-STYLE WOOD PRIVACY FENCE (6' HIGH)	14.3
		10+58.07	11+34.58	35.42 L	37.66 R	FENCE-STYLE CLF (6' HIGH, CLASS A)	105.8
82	WEST OF S. 118TH E. AVE.	18+20.07	18+20.05	22.04 R	18.04 R	FENCE-STYLE CLF (4' HIGH, CLASS A)	4.0
		18+20.05	18+20.04	18.04 R	14.04 R	GATE-STYLE CLF (4' HIGH X 4' LONG)	4.0
		18+20.04	18+20.01	14.04 R	8.04 R	GATE-STYLE CLF (4' HIGH X 6' LONG)	6.0
		18+20.01	18+19.95	8.04 R	9.98 L	FENCE-STYLE CLF (6' HIGH, CLASS A)	18.0
		18+19.95	19+11.04	9.98 L	9.92 L		91.1
		19+07.24	19+11.04	29.55 L	9.92 L	FENCE-STYLE WOOD PRIVACY FENCE (6' HIGH)	20.0
		19+11.04	19+17.85	9.92 L	25.27 R	FENCE-STYLE CLF (4' HIGH, CLASS A)	35.8
		19+11.04	20+17.64	9.92 L	9.84 L	FENCE-STYLE WOOD PRIVACY FENCE (6' HIGH)	106.6
		20+17.64	20+17.73	9.84 L	24.51 R	FENCE-STYLE CLF (4' HIGH, CLASS A)	34.4
	EAST OF S. 118TH E. AVE.	21+26.56	21+27.01	37.56 L	10.03 L	FENCE-STYLE WOOD PRIVACY FENCE (6' HIGH)	27.5
		21+27.01	21+80.00	10.03 L	10.01 L		53.0
		21+35.24	21+35.24	27.32 R	25.82 R		1.5
		21+35.24	21+35.24	25.82 R	18.82 R		7.0
		21+35.24	21+35.25	18.82 R	10.02 L		28.8
83	EAST OF S. 118TH E. AVE.	21+80.00	22+19.59	10.01 L	22.63 L	FENCE-STYLE WOOD PRIVACY FENCE (6' HIGH)	50.6
		22+06.28	22+19.59	46.83 L	22.63 L		32.9
		22+19.59	22+66.57	22.63 L	1.54 L		59.1
		22+52.50	22+53.90	1.99 L	17.34 L	FENCE-STYLE CLF (4' HIGH, CLASS A)	15.4
		22+66.57	22+66.57	1.54 L	11.50 R	FENCE-STYLE WOOD PRIVACY FENCE (6' HIGH)	13.0
		22+66.57	25+24.93	11.50 R	11.82 R		260.8
		22+97.35	23+01.64	33.69 R	11.50 R		22.6
		23+62.35	23+66.66	34.19 R	11.83 R		22.8
		24+30.93	24+35.69	34.71 R	11.83 R		23.4
		25+10.03	25+24.93	36.40 R	11.82 R		30.0
		23+18.76	23+19.49	28.01 L	12.09 L	FENCE-STYLE CLF (4' HIGH, CLASS A)	15.9
		23+19.49	25+60.00	12.09 L	11.84 L		251.4
		23+84.37	23+84.50	11.83 L	27.48 L		15.6
		24+50.72	24+50.78	27.14 L	11.83 L		15.3
		25+33.97	25+34.31	11.83 L	21.83 L		10.0
		25+24.93	25+60.00	11.82 R	11.83 R		37.8
84	SOUTH OF E. 17TH ST. S.	25+60.00	30+00.00	11.84 L	11.83 L	FENCE-STYLE CLF (4' HIGH, CLASS A)	428.0
		25+60.00	30+00.00	11.83 R	11.83 R		323.9
		26+78.82	26+79.53	11.84 L	20.57 L		8.8
		27+08.53	28+88.29	27.93 R	30.90 R		180.5
		27+57.77	27+58.19	29.21 R	11.83 R		17.4
		27+58.66	27+58.68	11.83 L	20.11 L		8.3
		27+68.28	27+68.34	29.94 R	37.94 R		8.0
		28+28.27	28+28.33	29.13 R	37.13 R		8.0
		28+88.29	28+88.34	30.90 R	38.90 R		8.0
		28+88.29	30+00.00	30.90 R	32.17 R	FENCE-STYLE WOOD PRIVACY FENCE (6' HIGH)	112.8
		29+09.27	29+09.29	11.83 R	27.85 R	FENCE-STYLE CLF (4' HIGH, CLASS A)	16.0
		29+46.05	29+46.49	37.28 R	29.29 R		8.0
85	SOUTH OF E. 17TH ST. S.	30+00.00	34+11.00	11.82 L	11.83 L	FENCE-STYLE CLF (4' HIGH, CLASS A)	412.5
		30+00.00	34+11.00	11.83 R	11.83 R		412.6
		30+00.00	31+88.42	33.51 R	33.32 R	FENCE-STYLE WOOD PRIVACY FENCE (6' HIGH)	257.4
		30+08.42	30+08.48	33.50 R	41.50 R		8.0
		30+68.42	30+68.48	33.19 R	41.19 R		8.0
		31+28.42	31+28.48	32.89 R	40.89 R		8.0
		31+88.42	31+88.48	33.32 R	41.32 R		8.0
		31+88.42	33+14.57	33.32 R	34.45 R	FENCE-STYLE CLF (4' HIGH, CLASS A)	60.0
		32+48.42	32+48.48	32.41 R	40.41 R		8.0
		33+13.49	33+14.57	42.38 R	34.45 R		8.0

PRINT DATE: 08/07/2020 M:\City_of_Tulsa\18TUL02_MZ6028_Tupelo_Creek_Drainage\Design\Drawings\18TUL02_SUMMARY_SCHEDULES.dwg

LICENSED PROFESSIONAL ENGINEER — BENJAMIN W. FLETCHER — 24921 — OKLAHOMA

8/7/2020

PARTICIPATING SUMMARY SCHEDULES

PROJECT #144628-W, TMUA-W 18-16

MAINTENANCE ZONE 6028-W
TUPELO CREEK DRAINAGE

CITY OF TULSA, OKLAHOMA
ENGINEERING SERVICES DEPARTMENT

PLANS AND ESTIMATES PREPARED BY:
Meshek & Associates, L.L.C.
1437 S. Boulder Avenue, Suite 1550 Tulsa, OK 74119 (918)392-5620

REVISION	BY	DATE

PLAN SCALE: N/A
PROFILE SCALE: HORIZONTAL: N/A VERTICAL: N/A

DRAWN	SCB	08/20	APPROVED:
DESIGNED	BWF	08/20	
SURVEY	AB	08/18	
PROJ. MGR.			
LEAD ENGR.			
FIELD MGR.			
RECOMMENDED DESIGN MANAGER			CITY ENGINEER
FILE:	DRAWING:		DATE:
ATLAS PAGE NO. 235			SHEET 36 OF 161 SHEETS

NON–PARTICIPATING SUMMARIES

NON-PARTICIPATING REMOVAL SUMMARY

SHEET NO.	FROM STATION	TO STATION	REMOVING TREES 25" & MORE IN DIAMETER	REMOVAL OF DRAINAGE INLETS	REMOVAL OF EXISTING PIPE	REMOVAL OF ASPHALT PAVEMENT	REMOVAL OF CURB AND GUTTER	REMOVAL OF SIDEWALK	REMOVAL OF CONCRETE DRIVEWAY	REMOVAL OF FENCE	COLD MILLING PAVEMENT
			EA	EA	LF	SY	LF	SY	SY	LF	SY
55	113+96.17	118+75.54	0	2	63.1	1077.4	605.3	175.3	209.3	42.7	0
56	201+04.39	206+04	0	2	59.3	0	750.7	8.7	244.2	54	943
57	404+45.24	405+80.00	0	0	0	338.3	160	0	135.3	0	0
58	405+80.00	411+45.59	0	0	99.7	2388.2	1004.9	24	411.8	0	0
	412+20.04	413+40.00	0	0	0	264.5	176.6	0	74	0	27.6
59	413+40.00	415+76.00	0	1	52	159.7	325.9	5.1	115.1	0	343.4
	300+00.00	303+00.00	1	0	0	846.2	351.7	4.2	177	0	0

NON-PARTICIPATING DRIVEWAY REMOVAL AND REPLACEMENT SUMMARY

SHEET NO.	STREET	DRIVEWAY NUMBER	STATION	OFFSET	WIDTH (FT)	EXISTING SLOPE (%)	PROPOSED SLOPE (%)	6" CONCRETE (SY)	AGGREGATE BASE (CY)
69	E. 16TH ST. S.	DW-03	114+61.16	30.41 L	16.6	8.3	10.1,1.5,10.3	28.6	4.8
		DW-04	114+88.92	29.60 R	16.5	8.6	8.8,1.5,5.8	27.0	4.5
70	E. 16TH ST. S.	DW-05	115+70.93	37.50 L	17.9	10.1	9.9,1.5,10.0	44.9	7.5
		DW-06	116+34.19	40.00 L	17.2	11.1	12.8,1.5,12.9	46.5	7.8
		DW-07	117+34.29	29.78 R	16.2	7.8	7.5	27.5	4.6
		DW-08	118+60.11	29.73 R	26.7	7.9	7.8	41.7	7.0
71	S. 116TH E. AVE.	DW-10	201+16.02	25.21 R	17.2	14.4	8.3	28.6	4.8
		DW-12	201+67.80	25.51 R	9.7	10.3	5.6	17.7	3.0
72	S. 116TH E. AVE.	DW-13	202+67.94	24.52 L	17.6	5.7	4.5	28.6	4.8
		DW-14	202+75.80	25.47 R	16.2	8.6	8.2	28.3	4.7
		DW-15	203+30.81	24.63 L	18.4	10.9	4.1	30.5	5.1
		DW-16	203+42.53	25.35 R	15.5	10.8	7.0	26.6	4.4
		DW-17	203+98.11	24.75 L	20.6	3.8	3.8	32.7	5.5
		DW-18	204+51.98	24.70 L	18.0	18.6	6.5	29.2	4.9
		DW-19	204+99.99	24.87 L	20.5	8.3	5.8	32.3	5.4
73	S. 117TH E. AVE.	DW-20	301+30.46	17.44 L	20.9	3.1	9.7	16.7	2.8
		DW-21	301+64.07	36.13 L	34.0	1.9	2.0	47.9	8.0
		DW-22	302+31.39	31.40 L	16.6	7.4	7.4	26.4	4.4
		DW-23	302+41.75	10.80 L	16.2	7.4	7.4	26.5	4.4
		DW-24	302+32.34	31.03 R	16.4	8.6	8.6	27.5	4.6
		DW-25	301+92.25	49.57 R	17.3	14.1	10.3	29.7	5.0
75	S. 117TH E. AVE.	DW-35	404+66.95	24.93 R	16.3	8.5	15.2,1.5,15.1	27.4	4.6
		DW-36	404+77.97	25.07 L	16.5	8.9	12.3,1.5,11.0	27.9	4.7
		DW-37	405+03.84	24.95 R	16.5	6.3	9.1,1.5,7.0	27.6	4.6
		DW-38	405+12.91	25.05 L	14.5	9.5	12.8,1.5,12.6	26.0	4.3
		DW-39	405+71.15	24.99 R	16.7	7.5	8.1,1.5,6.0	28.2	4.7
76	S. 117TH E. AVE.	DW-40	406+23.32	46.68 R	19.9	4.8	4.8	34.9	5.8
	E. 17TH PL.	DW-41	406+45.92	72.77 R	16.9	8.9	8.9	27.8	4.6
		DW-42	406+70.30	67.68 R	33.4	6.1	6.1	47.6	7.9
		DW-43	406+72.55	25.59 L	16.8	9.5	9.1,1.5,10.8	30.0	5.0
		DW-44	407+10.77	25.05 R	19.4	5.0	12.0,1.5,12.2	32.9	5.5
		DW-45	408+66.96	25.37 L	13.5	8.9	9.1,1.5,8.9	24.6	4.1
		DW-46	409+07.88	63.89 R	17.6	9.2	9.2	28.4	4.7
	S. 118TH E. AVE.	DW-47	409+36.34	88.96 R	16.4	9.7	9.7	26.4	4.4
		DW-48	409+55.70	68.61 R	17.2	4.9	4.9	28.5	4.8
		DW-49	410+01.03	25.32 R	18.2	7.4	9.9,1.5,8.4	31.3	5.2
77	S. 118TH E. AVE.	DW-50	410+30.99	24.66 L	17.2	8.2	8.8,1.5,3.5	26.6	4.4
		DW-51	410+32.96	25.33 R	15.5	10.9	7.7,1.5,7.3	26.3	4.4
		DW-52	410+96.16	24.63 L	10.9	9.3	11.1,1.5,10.9	18.8	3.1
		DW-53	411+30.15	25.38 R	18.1	9.3	10.5,1.5,9.2	30.9	5.2
		DW-54	412+33.33	24.56 L	15.9	7.2	13.1,1.5,11.4	26.3	4.4
		DW-55	412+53.27	25.44 R	16.0	9.2	12.5,1.5,10.5	27.0	4.5
		DW-56	413+37.69	25.52 R	17.7	4.6	4.6	30.5	5.1
78	S. 118TH E. AVE.	DW-57	413+47.12	24.51 L	16.7	5.8	4.5	27.1	4.5
		DW-58	414+13.19	24.48 L	16.5	5.4	4.5	27.1	4.5
		DW-59	414+21.04	25.58 R	17.4	7.6	7.4	29.8	5.0
		DW-60	414+73.30	24.27 L	16.5	6.7	5.4	26.5	4.4

NON-PARTICIPATING FENCE SUMMARY

SHEET NO.	STREET	FROM STATION	TO STATION	FROM OFFSET	TO OFFSET	TYPE	LENGTH (FT)
70	E. 16TH ST. S.	117+56.52	118+01.74	29.62 R	27.82 R	FENCE-STYLE WOOD PRIVACY FENCE (6' HIGH)	42.7
72	S. 116TH E. AVE.	204+25.09	204+85.86	24.44 R	22.85 R	FENCE-STYLE WOOD PRIVACY FENCE (6' HIGH)	54.0

NON-PARTICIPATING RECONSTRUCTION SUMMARY

SHEET NO.	STREET	FROM STATION	TO STATION	SUPERPAVE, TYPE S3 (SY)	SUPERPAVE, TYPE S4 (SY)	SUPERPAVE, TYPE S3 (TONS)	SUPERPAVE, TYPE S4 (TONS)	SUBGRADE METHOD "B" (SY)	AGGREGATE BASE (CY)	SEPARATOR FABRIC (SY)
69	E. 16TH ST. S.	113+96.17	115+00.00	380.1	380.1	106.4	42.6	380.1	126.7	494.1
70	E. 16TH ST. S.	115+00.00	116+94.44	699.2	699.2	195.8	78.3	699.2	233.1	909.0
73	S. 117TH E. AVE	300+16.50	302+29.69	853.8	853.8	239.1	95.6	853.8	284.6	1109.9
75	S. 117TH E. AVE	404+45.24	405+80.00	344.4	344.4	96.4	38.6	344.4	114.8	447.7
76	E. 17TH PL.	405+80.00	410+20.00	2052.9	2052.9	574.8	229.9	2052.9	684.3	2668.8
77	S. 118TH E. AVE	410+20.00	411+44.59	318.4	318.4	89.2	35.7	318.4	106.1	413.9
		412+20.04	413+24.74	267.3	267.3	74.8	29.9	267.3	89.1	347.5
78	S. 118TH E. AVE	415+04.69	415+59.27	166.7	166.7	46.7	18.7	166.7	55.6	216.7

NON-PARTICIPATING MILL & OVERLAY SUMMARY

SHEET NO.	STREET	TO STATION	FROM STATION	MILL (SY)	SUPERPAVE, TYPE S4 (TONS)	SUPERPAVE, TYPE S5 (TONS)	FABRIC REINFORCEMENT (SY)
70	E. 16TH ST. S.	116+94.44	118+75.53	663.5	74.3	37.2	729.9
71	S. 116TH E. AVE	201+04.39	202+20.00	295.4	33.1	16.5	324.9
72	S. 116TH E. AVE	202+20.00	206+10.50	1054.5	118.1	59.1	1160.0
77	S. 118TH E. AVE	413+24.74	413+40.00	39.0	4.4	2.2	42.9
78	S. 118TH E. AVE	413+40.00	415+04.69	418.8	46.9	23.5	460.7

NON-PARTICIPATING AC PATCHING SUMMARY

SHEET NO.	STREET	STATION	OFFSET	TYPE 1 AC PATCH (SY)	SUBGRADE METHOD "B" (SY)	AGGREGATE BASE (CY)	SEPARATOR FABRIC (SY)
71	S. 116TH E. AVE	201+27.18	201+93.91	134.9	134.9	45.0	175.4
72	S. 116TH E. AVE	205+30.98	206+10.50	242.2	242.2	80.7	314.9
77	S. 118TH E. AVE	413+24.74	413+40.00	11.0	11.0	3.7	14.3
78	S. 118TH E. AVE	413+40.00	414+40.77	74.5	74.5	24.8	96.9

NON-PARTICIPATING SIDEWALK SUMMARY

SHEET NO.	STREET	FROM STATION	TO STATION	4" P.C. CONCRETE (SY)
69	E. 16TH ST. S.	113+96.17	114+52.88	31.5
		114+24.95	114+29.13	5.1
		114+69.45	114+94.64	24.1
70	E. 16TH ST. S.	115+33.98	115+61.88	25.7
		115+73.63	115+77.65	4.9
		115+79.86	116+25.78	25.5
		116+42.41	117+77.83	79.0
73	S. 117TH E. AVE.	300+77.03	300+80.11	4.1
76	E. 17TH PL.	408+73.55	408+75.91	3.9
78	S. 118TH E. AVE.	414+75.97	414+80.02	5.0

BENJAMIN W. FLETCHER — 24921 — REGISTERED PROFESSIONAL ENGINEER — OKLAHOMA

8/7/2020

NON–PARTICIPATING SUMMARY SCHEDULES

PROJECT #144628–W, TMUA–W 18–16

MAINTENANCE ZONE 6028–W
TUPELO CREEK DRAINAGE

CITY OF TULSA, OKLAHOMA
ENGINEERING SERVICES DEPARTMENT

PLANS AND ESTIMATES PREPARED BY:
Meshek & Associates, L.L.C.
1437 S. Boulder Avenue, Suite 1550 Tulsa, OK 74119 (918)392–5620

REVISION	BY	DATE

PLAN SCALE: N/A
PROFILE SCALE: HORIZONTAL: N/A; VERTICAL: N/A

DRAWN	SCB	08/20	APPROVED:
DESIGNED	BWF	08/20	
SURVEY	AB	08/18	
PROJ. MGR.			
LEAD ENGR.			
FIELD MGR.			
RECOMMENDED DESIGN MANAGER			CITY ENGINEER
FILE:	DRAWING:		DATE:
ATLAS PAGE NO. 235			SHEET 37 OF 161 SHEETS

PRINT DATE: 08/07/2020 M:\City_of_Tulsa\18TUL02_MZ6028_Tupelo_Creek_Drainage\Design\Drawings\18TUL02_SUMMARY_SCHEDULES.dwg

NON–PARTICIPATING SUMMARIES

NON-PARTICIPATING CURB & GUTTER SUMMARY

SHEET NO.	STREET SIDE	FROM STATION	TO STATION	2'-2" COMBINED CURB AND GUTTER (6" BARRIER)
69	LEFT	113+96.17	114+48.56	52.4
	RIGHT	113+96.17	114+76.10	79.9
	LEFT	114+73.79	114+76.30	2.5
70	LEFT	115+52.30	115+57.54	5.2
	RIGHT	115+01.25	116+26.03	124.8
	LEFT	115+84.20	116+21.10	36.9
	LEFT	116+46.59	117+86.79	145.9
	RIGHT	117+00.08	117+19.53	18.2
	RIGHT	117+47.13	118+43.00	92.9
	LEFT	118+54.22	118+74.52	19.7
71	LEFT	201+04.39	202+20.00	111.5
	RIGHT	201+27.72	201+58.92	33.3
	RIGHT	201+75.59	202+20.00	43.8
72	LEFT	202+20.00	202+54.53	32.7
	RIGHT	202+20.00	202+63.33	45.2
	LEFT	202+80.99	203+17.14	36.2
	RIGHT	202+88.35	203+30.79	42.4
	RIGHT	203+54.77	205+92.00	236.9
	LEFT	203+44.85	203+83.63	38.8
	LEFT	204+12.36	204+39.25	27.4
	LEFT	204+63.46	204+87.10	25.4
	LEFT	205+12.87	205+93.66	105.8
73	RIGHT	300+18.04	300+39.64	35.9
	LEFT	300+17.96	300+39.53	35.8
	LEFT	300+51.42	301+15.71	64.3
	RIGHT	300+51.51	301+76.52	133.0
	LEFT	301+45.18	301+46.30	1.1
	LEFT	301+82.39	302+12.67	31.4
	RIGHT	302+01.47	302+12.88	12.3
	LEFT	302+27.12	302+27.84	1.7
	RIGHT	302+28.16	302+30.81	9.8
75	LEFT	404+45.24	404+64.09	18.9
	RIGHT	404+45.24	404+55.70	10.5
	RIGHT	404+80.79	404+92.70	11.9
	LEFT	404+89.47	404+99.70	10.2
	RIGHT	405+17.92	405+59.83	41.9
	LEFT	405+23.92	405+80.00	56.1
76	LEFT	405+80.00	406+58.13	68.6
	RIGHT	405+85.45	406+24.01	45.8
	RIGHT	406+33.83	406+40.74	14.1
	RIGHT	406+53.34	406+56.14	4.9
	RIGHT	406+74.18	406+98.44	50.2
	LEFT	406+90.86	408+55.88	161.6
	RIGHT	407+24.86	407+87.12	81.9
	RIGHT	408+12.74	409+09.49	143.5
	LEFT	408+81.19	410+18.03	115.8
	RIGHT	409+16.38	409+30.22	31.5
	RIGHT	409+40.68	409+47.64	16.1
	RIGHT	409+55.43	409+89.40	63.1
	RIGHT	410+15.68	410+20.00	4.3
77	RIGHT	410+20.00	410+22.35	2.3
	LEFT	410+42.58	410+86.41	43.8
	RIGHT	410+46.10	411+17.78	71.7
	LEFT	411+05.93	411+44.59	38.7
	RIGHT	412+20.04	412+42.20	22.2
	LEFT	412+44.82	413+35.09	90.3
	RIGHT	412+66.22	413+25.52	59.3
78	RIGHT	413+51.88	414+09.53	57.6
	LEFT	413+60.49	413+99.09	38.6
	LEFT	414+24.58	414+60.30	36.1
	RIGHT	402+00.37	415+57.82	134.8
	LEFT	414+84.66	415+57.65	86.0

NON-PARTICIPATING MAILBOX SUMMARY

SHEET	STREET	STATION	OFFSET	TYPE
69	11708 E. 16TH ST.	114.23.29	19.76 R	WOOD
70	11714 E. 16TH ST.	115+06.38	19.79 R	WOOD
	11722 E. 16TH ST.	115+79.29	19.36 R	STEEL
	11719 E. 16TH ST.	115+84.80	19.65 L	WOOD
	11725 E. 16TH ST.	116+20.02	19.45 L	WOOD
71	1537 S. 116TH E. AVE.	201+30.18	16.70 R	STEEL
	1540 S. 116TH E. AVE.	201+71.11	14.49 L	WOOD (REMOVE)
	1533 S. 116TH E. AVE.	201+75.74	15.25 R	WOOD
72	1530 S. 116TH E. AVE.	202+49.56	14.16 L	WOOD
	1529 S. 116TH E. AVE.	202+61.92	15.37 R	STEEL
	1524 S. 116TH E. AVE.	203+16.64	14.68 L	STEEL
	1523 S. 116TH E. AVE.	203+29.35	14.53 R	STEEL
	1520 S. 116TH E. AVE	203+85.28	14.79 L	STEEL
	1514 S. 116TH E. AVE	204+38.60	15.66 L	STEEL
	1510 S. 116TH E. AVE	204+88.51	15.31 L	WOOD
73	11709 E. 16TH ST.	301+15.57	14.40 L	STEEL
	1515 S. 117TH E. AVE.	301+74.22	32.96 R	PLASTIC
	1516 S. 117TH E. AVE.	301+87.68	39.56 L	WOOD
	1509 S. 117TH E. AVE.	302+10.07	35.31 R	WOOD
	1510 S. 117TH E. AVE.	302+10.31	36.37 L	STEEL
	1505 S. 117TH E. AVE.	302+31.97	7.21 R	STEEL
75	1636 E. 117TH E. AVE.	404+54.68	14.18 R	WOOD
	1637 E. 117TH E. AVE.	404+59.92	15.37 L	PLASTIC
	1642 E. 117TH E. AVE.	405+20.31	15.11 R	WOOD
	1641 E. 117TH E. AVE.	405+23.68	15.10 L	BRICK
76	1646 E. 117TH E. AVE.	405+84.50	14.44 R	STEEL
	1650 E. 117TH E. AVE.	406+32.73	48.16 R	WOOD
	11704 E. 17TH PL.	406+54.76	63.83 R	WOOD
	11708 E. 17TH PL.	406+75.11	48.76 R	WOOD
	11715 E. 17TH PL.	406+92.32	12.06 L	STEEL
	11714 E. 17TH PL.	407+28.18	14.72 R	PLASTIC
	11726 E. 17TH PL.	408+78.13	14.44 R	PLASTIC
	11730 E. 17TH PL.	409+17.00	67.71 R	STEEL
	1661 S. 118TH E. AVE.	409+27.06	77.85 R	STEEL
	1651 S. 118TH E. AVE.	409+48.02	68.26 R	WOOD
	1648 S. 118TH E. AVE.	409+86.11	15.54 L	WOOD
	1647 S. 118TH E. AVE.	409+87.34	15.44 R	PLASTIC
77	1642 S. 118TH E. AVE.	410+52.29	14.95 L	STEEL
	1641 S. 118TH E. AVE.	410+53.13	14.52 R	WOOD
	1636 S. 118TH E. AVE.	411+12.20	14.95 L	WOOD
	1637 S. 118TH E. AVE.	411+15.68	15.48 R	STEEL
	1629 S. 118TH E. AVE.	412+38.92	15.42 R	STEEL
	1628 S. 118TH E. AVE.	412+48.71	15.58 L	WOOD
	1621 S. 118TH E. AVE.	413+25.02	15.31 R	STEEL
	1620 S. 118TH E. AVE.	413+31.16	14.30 L	STEEL
78	1614 S. 118TH E. AVE.	413+92.82	14.96 L	WOOD
	1615 S. 118TH E. AVE.	414+07.91	15.34 R	WOOD
	1607 S. 118TH E. AVE.	414+84.19	15.29 R	WOOD

NON-PARTICIPATING STREET SIGN SUMMARY

SHEET NO.	SIGN NO.	STREET	STATION	OFFSET	SIGN	STD.	ACTION	SIGN DIMENSIONS (IN X IN)	AREA (SF)	2" SIGN POST (LF)	1-3/4" SIGN POST (LF)	1-1/2" SIGN POST (LF)
70	1	E. 16TH ST.	115+51.91	20.86 L	SPEED HUMP (W17-1)		REMOVE AND REPLACE	30X30	6.25	3	11	
	2	E. 16TH ST.	118+31.60	22.72 R	SPEED HUMP (W17-1)		REMOVE AND REPLACE	30X30	6.25	3	11	
72	3	S. 116TH E. AVE.	205+82.34	23.31 R	S. 116TH E. AVE.	608(A)	REMOVE AND REPLACE	6x30	1.25	3	8	1.5
	4				E. 15TH ST.	608(A)	REMOVE AND REPLACE	6x24	1.00			
	5		205+87.64	43.92 L	SPEED HUMP (W17-1)		REMOVE AND REPLACE	30X30	6.25	3	11	
73	6	S. 117TH E. AVE.	300+31.78	18.51 R	E. 16TH ST.	608(A)	REMOVE AND REPLACE	6x24	1.00	3	8	1.5
	7				S. 117TH E. AVE.	608(A)	REMOVE AND REPLACE	6x30	1.25			
76	8	S. 117TH E. AVE.	406+33.71	16.29 L	S. 117TH E. AVE.	608(A)	REMOVE AND REPLACE	6x30	1.25	3	8	1.5
	9				E. 17TH PL.	608(A)	REMOVE AND REPLACE	6x24	1.00			
	10	E. 17TH PL.	408+21.16	21.31 R	S. 117TH E. AVE.	608(A)	REMOVE AND REPLACE	6x30	1.25	3	8	1.5
	11				E. 17TH PL.	608(A)	REMOVE AND REPLACE	6x24	1.00			
	12	S. 118TH E. AVE.	409+25.80	16.51 L	E. 17TH PL.	608(A)	REMOVE AND REPLACE	6x24	1.00	3	8	1.5
	13				S. 118TH E. AVE.	608(A)	REMOVE AND REPLACE	6x30	1.25			
78	14	S. 118TH E. AVE.	415+51.16	22.78 R	S. 118TH E. AVE.	608(A)	REMOVE AND REPLACE	6x30	1.25	3	8	1.5
	15				E. 16TH ST.	608(A)	REMOVE AND REPLACE	6x24	1.00			

NON-PARTICIPATING ROADSIDE DEVELOPMENT SUMMARY

EROSION SHEET	STREET	FROM STATION	TO STATION	SOLID SLAB SOD (LIKE-KIND) (SY)	TEMPORARY SILT DIKE (LF)	TEMPORARY SILT FENCE (LF)
48	E. 16TH ST. S.	113+96.17	118+78.00	654.1	96.5	0
49	S. 116TH E. AVE	200+57.00	206+04.00	1073.3	68.1	0
50	S. 117TH E. AVE	300+00.00	302+44.00	577.1	0.0	0
51	S. 117TH E. AVE./E. 17TH PL. S./S. 118TH E. AVE.	404+45.24	410+20.00	1760.0	0.0	0
52	S. 118TH E. AVE.	410+20.00	411+44.59	183.5	0.0	0
53	S. 118TH E. AVE.	412+20.04	415+76.00	734.8	55.6	0

PRINT DATE: 08/07/2020 M:\City_of_Tulsa\18TUL02_MZ6028_Tupelo_Creek_Drainage\Design\Drawings\18TUL02_SUMMARY_SCHEDULES.dwg

BENJAMIN W. FLETCHER PE 24921 LICENSED PROFESSIONAL ENGINEER OKLAHOMA

8/7/2020

NON–PARTICIPATING SUMMARY SCHEDULES

PROJECT #144628–W, TMUA–W 18–16

MAINTENANCE ZONE 6028–W
TUPELO CREEK DRAINAGE

CITY OF TULSA, OKLAHOMA
ENGINEERING SERVICES DEPARTMENT

PLANS AND ESTIMATES PREPARED BY:
Meshek & Associates, L.L.C.
1437 S. Boulder Avenue, Suite 1550 Tulsa, OK 74119 (918)392–5620

REVISION	BY	DATE

PLAN SCALE: N/A
PROFILE SCALE: HORIZONTAL: N/A VERTICAL: N/A

DRAWN	SCB	08/20	APPROVED:
DESIGNED	BWF	08/20	
SURVEY	AB	08/18	
PROJ. MGR.			
LEAD ENGR.			
FIELD MGR.			
RECOMMENDED DESIGN MANAGER			CITY ENGINEER

FILE: DRAWING: DATE:

ATLAS PAGE NO. 235 SHEET 38 OF 161 SHEETS

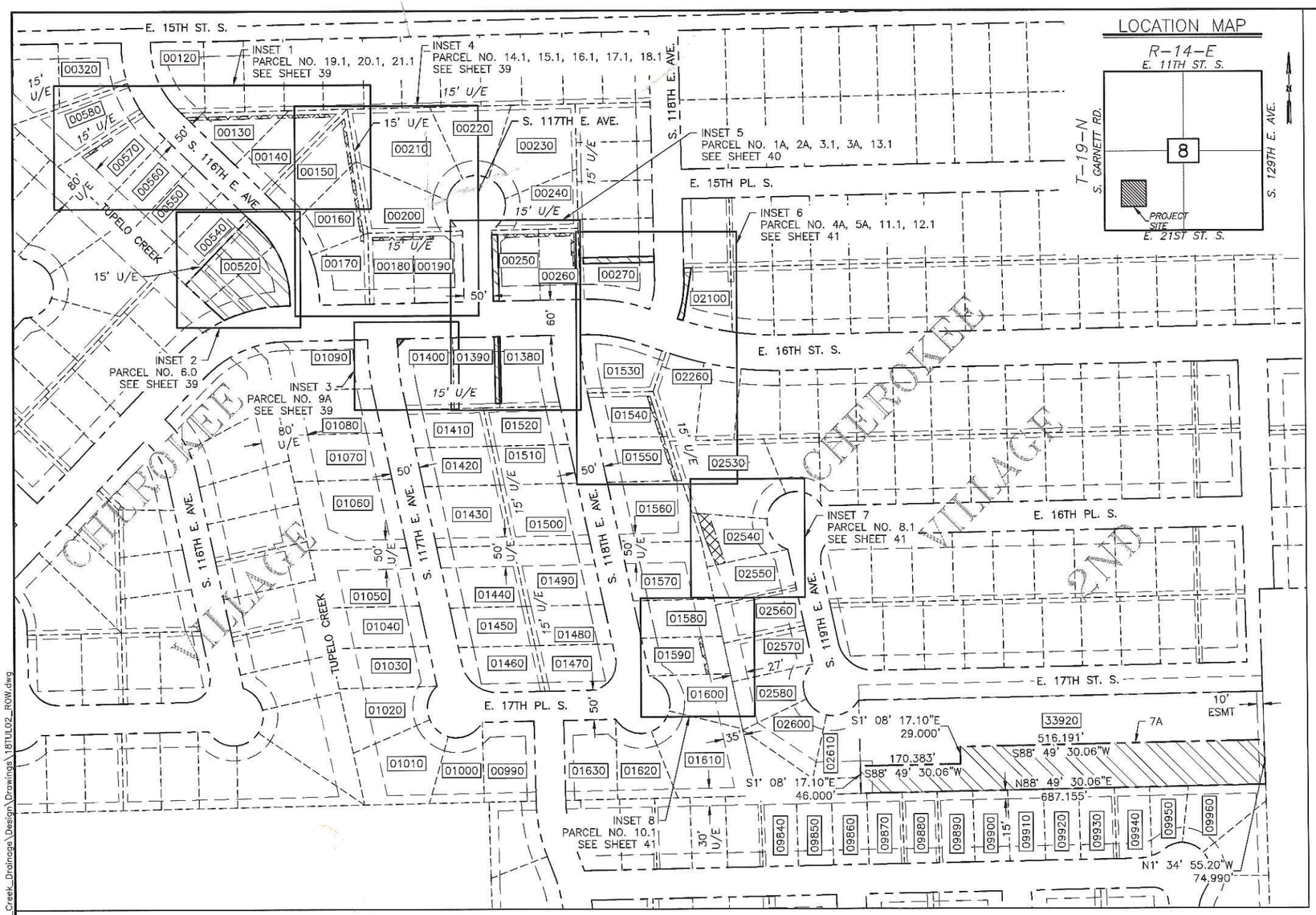

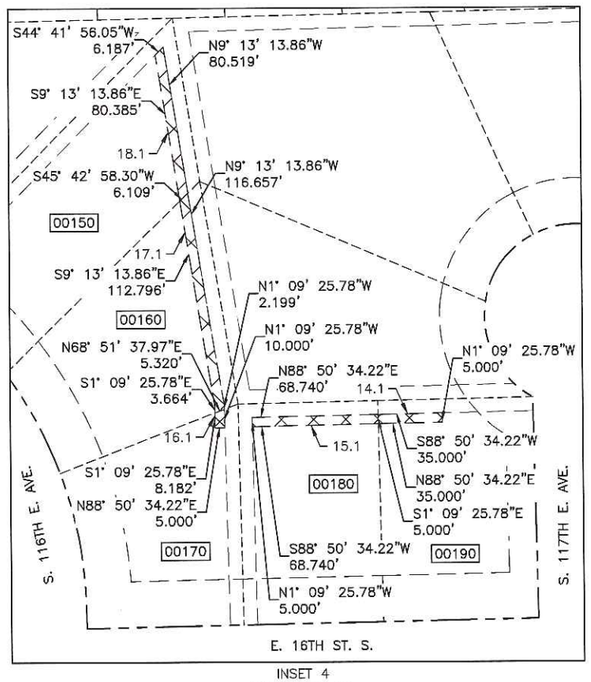

INSET 4
SCALE: 1"=40'

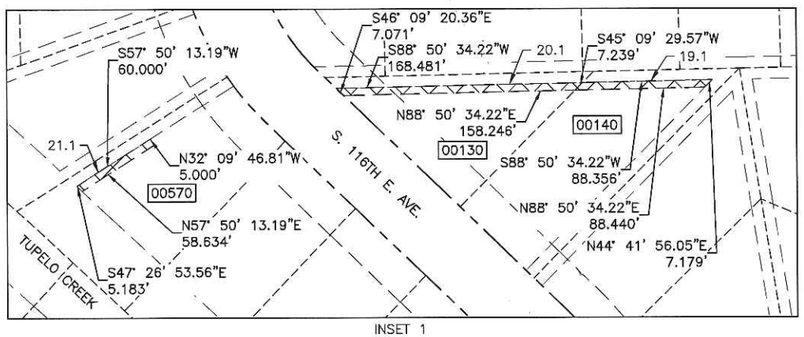

INSET 1
SCALE: 1"=50'

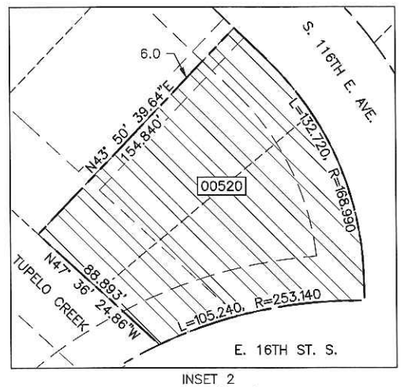

INSET 2
SCALE: 1"=40'

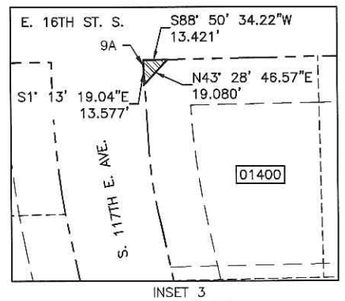

INSET 3
SCALE: 1"=40'

PRINT DATE: 08/07/2020 M:\City_of_Tulsa\18TUL02_MZ6028_Tupelo_Creek_Drainage\Design\Drawings\18TUL02_ROW.dwg

OKIE 811 Know what's below. Call before you dig.

LICENSED PROFESSIONAL ENGINEER
BENJAMIN W. FLETCHER
24921
OKLAHOMA
8/7/2020

RIGHT OF WAY

PROJECT #144628-W, TMUA-W 18-16

MAINTENANCE ZONE 6028-W
TUPELO CREEK DRAINAGE

CITY OF TULSA, OKLAHOMA
ENGINEERING SERVICES DEPARTMENT

PLANS AND ESTIMATES PREPARED BY:
Meshek & Associates, L.L.C.
1437 S. Boulder Avenue, Suite 1550 Tulsa, OK 74119 (918)392-5620

REVISION	BY	DATE

PLAN SCALE	DRAWN	SCB	08/20
1" = 100'	DESIGNED	BWF	08/20
	SURVEY	AB	08/18
PROFILE SCALE	PROJ. MGR.		
HORIZONTAL: N/A	LEAD ENGR.		
	FIELD MGR.		
VERTICAL: N/A	RECOMMENDED		
	DESIGN MANAGER		
FILE:	DRAWING:		
ATLAS PAGE NO. 235			

APPROVED:

CITY ENGINEER

DATE:

SHEET 39 OF 161 SHEETS

PARTICIPATING

ASSESSOR NUMBER	PARCEL NUMBER	LOT NUMBER	BLOCK NUMBER	OWNER	ADDRESS	PERMANENT EASEMENT	TEMPORARY CONSTRUCTION EASEMENT	RIGHT OF ENTRY	FEE SIMPLE	TYPE OF WORK
01090		11	5	GARCIA, MARY R PEUGH	1606 S 117 AVE			X		DRIVEWAY, MAILBOX
01400	9A	3	6	SMITH, EDWARD W & BARBARA J TAKE	11708 E 16 ST S	X		X		DRIVEWAY, MAILBOX, WATERLINE
01390	1A	2	6	BLUE POINT REALTY LLC	11714 E 16 ST S	X		X		DRIVEWAY, MAILBOX, SANITARY SEWER
01380	2A	1	6	ABDALLA, ALICE A	11722 E 16 ST S	X		X		DRIVEWAY, MAILBOX, SANITARY SEWER
01530		1	7	ORTIZ, CHRISTIAN ERNESTO & LAURA MAY	1607 S 118 AVE			X		DRIVEWAY, MAILBOX, SANITARY SEWER
02260		1	10	GATZKE, DELMAR ARBIE & SHARON MARIE REV TRUST	11806 E 16 ST S			X		DRIVEWAY , SANITARY SEWER
00520	6.0	21,22	2	BENJAMIN, ETHAN D AND IRIS B	1540 S 116 AVE				X	REMOVAL OF HOUSE, SHED, POOL, TREES, FENCE
00170	16.1	17	1	PYEATT, JASON NEALE	11635 E 16 ST S		X	X		DRIVEWAY, MAILBOX, SANITARY SEWER
00180	15.1	18	1	COOPER, CAREY BRENT AND DORA LYNN	11703 E 16 ST S		X	X		DRIVEWAY, MAILBOX, SANITARY SEWER
00250	3A, 3.1	25	1	MARKLAND, KARLENE SUSAN	11719 E 16 ST S	X	X	X		DRIVEWAY, MAILBOX, SANITARY SEWER
00260	13.1	26	1	PETERSON, PATRICIA M	11725 E 16 ST S		X	X		DRIVEWAY, MAILBOX, SANITARY SEWER
00270	4A	27	1	PERKINS, MARK WESLEY II & CORINNE M	1538 S 118 AVE	X		X		SANITARY SEWER
02100	5A	17	9	KOEHRING, ROBERT G AND DIANNE	11809 E 16 ST S	X		X		SANITARY SEWER
01080		10	5	CLEAR, LURA SUE & DON W	1612 S 117 AVE			X		DRIVEWAY, MAILBOX
01070		9	5	LUNDQUIST, DAVID R & CAROLE E TRUSTEES DAVID R & CAROLE E LUNDQUIST TRUSTS	1618 S 117 AVE			X		DRIVEWAY, MAILBOX
01060		8	5	PEREZ, FIDEL & BERTHA	1628 S 117 AVE			X		DRIVEWAY, MAILBOX
01610		9	7	GARICA-OLMOS, JESUS & MAYRA G	1661 S 118 AVE			X		DRIVEWAY, MAILBOX, CHANNEL
01600		8	7	H & C INVESTMENT PROPERTIES LLC	1651 S 118 AVE			X		DRIVEWAY, MAILBOX, FENCE, SANITARY SEWER, CHANNEL, TREES
01590	10.1	7	7	MILLARR, PATRICIA RUTH	1647 S 118 AVE		X	X		DRIVEWAY, MAILBOX, FENCE, SANITARY SEWER, CHANNEL
01580		6	7	SMITH, LUCILLE	1641 S 118 AVE			X		DRIVEWAY, MAILBOX, FENCE, CHANNEL,TREES
01570		5	7	LANDEROS, MARIA & FIDEL MEZA	1637 S 118 AVE			X		DRIVEWAY, MAILBOX, FENCE, TREE
01560		4	7	STOKES, STACIE	1629 S 118 AVE			X		DRIVEWAY, MAILBOX, FENCE, TREES
01410		4	6	BROWN, LARRY R	1613 S 117 AVE			X		DRIVEWAY, MAILBOX
01420		5	6	MEYER, JUDITH L	1619 S 117 AVE			X		DRIVEWAY, MAILBOX
01430		6	6	RAMSEY, BOBBY G AND CATHERINE A	1627 S 117 AVE			X		DRIVEWAY, MAILBOX, FENCE, STORM SEWER, TREES
01440		7	6	PRYOR, PERRY R AND TONY RF	1637 S 117 AVE			X		DRIVEWAY, MAILBOX, FENCE, STORM SEWER, TREE
01490		12	6	TUCASA PROPERTIES LLC SERIES A-26	1636 S 118 AVE			X		DRIVEWAY, MAILBOX, FENCE, STORM SEWER, TREE
01500		13	6	KNOWLTON, KEVIN	1628 S 118 AVE			X		DRIVEWAY, MAILBOX, FENCE, STORM SEWER, TREE
02540	8.1	29	10	MUNDELL, MELISSA A	1626 S 119 AVE		X	X		TREES, FENCE, STORM SEWER
02550		30	10	CITY OF TULSA	TULSA 74128					FENCE, CHANNEL
02560		31	10	PRIDDY, WILLOUGHBY DEAN III AND GEORGIA A	1638 S 119 AVE			X		FENCE, CHANNEL, TREES
02570		32	10	BUECHLER, JOHN H	1644 S 119 AVE			X		FENCE, CHANNEL
02580		33	10	OLIVER, AUGUSTUS C JR	1648 S 119 AVE			X		FENCE, CHANNEL, TREES
02600		34	10	BINGHAM, GARY AND REBECCA	11902 E 17 ST S			X		FENCE, CHANNEL, TREES
02610		35	10	BUECHLER, JOHN H III AND JOYCE A	11904 E 17 ST S			X		FENCE, CHANNEL, TREE
33920	7A	UNPLATTED		BUECHLER, JOHN H III AND JOYCE A	N/A	X		X		FENCE, CHANNEL, TREES
09840		6	1	RUPE, PATRICIA I	11725 E 18 ST S					N/A
09850		7	1	LATHAN, KENNETH W AND SHERRIE L	11731 E 18 ST S					N/A
09860		8	1	COPELAND, OWIS K AND VERDA TRUST	11901 E 18 ST S					N/A
09870		9	1	RUGG, MIKE W AND JANA L	11905 E 18 ST S					N/A
09880		10	1	TIFFANY, MICHAEL HENRY	11909 E 18 ST S					N/A
09890		11	1	KADATSKY, VITALY AND ALICE	11915 E 18 ST S					N/A
09900		12	1	SMITH-BLEVINS, MISTY M	11919 E 18 ST S					N/A
09910		13	1	AULTMAN, VALORIE L	11925 E 18 ST S					N/A
09920		14	1	CENICEROS, ERIKA G	11929 E 18 ST S					N/A
09930		15	1	GOMEZ, OCTAVIO AND CECILIA RIVAS	11935 E 18 ST S					N/A
09940		16	1	C AND C HOLDINGS INC	11939 E 18 ST S					N/A
09950		17	1	SOTO, HUMBERTO S AND ELVIRA ZUNIGA	11945 E 18 ST S					N/A
09960		18	1	MARTIN, KENNETH WAYNE AND RONDA D	11949 E 18 ST S					N/A

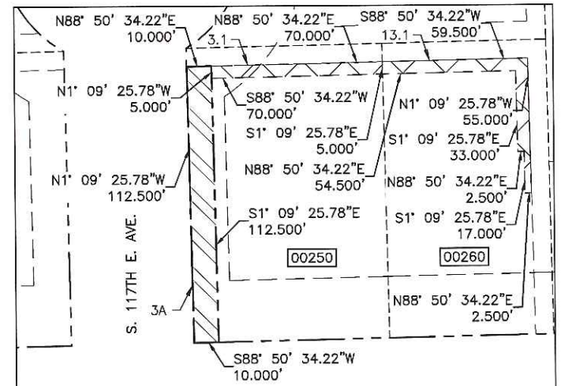

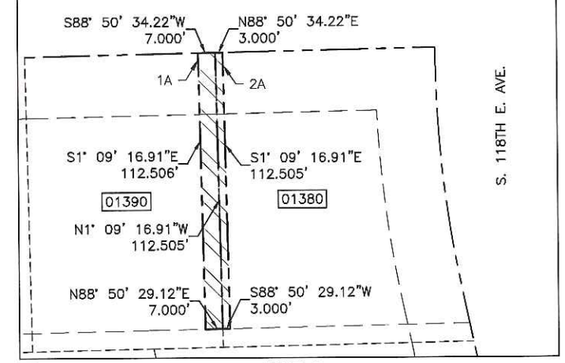

INSET 5
SCALE: 1"=30'

OKIE 811 Know what's below. Call before you dig.

LICENSED PROFESSIONAL ENGINEER
BENJAMIN W. FLETCHER
PE
24921
OKLAHOMA

8/7/2020

RIGHT OF WAY

PROJECT #144628-W, TMUA-W 18-16

MAINTENANCE ZONE 6028-W
TUPELO CREEK DRAINAGE

CITY OF TULSA, OKLAHOMA
ENGINEERING SERVICES DEPARTMENT

PLANS AND ESTIMATES PREPARED BY:
Meshek & Associates, L.L.C.
1437 S. Boulder Avenue, Suite 1550 Tulsa, OK 74119 (918)392-5620

REVISION	BY	DATE

PLAN SCALE: N/A
PROFILE SCALE
HORIZONTAL: N/A
VERTICAL: N/A

DRAWN	SCB	08/20	APPROVED:
DESIGNED	BWF	08/20	
SURVEY	AB	08/18	
PROJ. MGR.			
LEAD ENGR.			
FIELD MGR.			
RECOMMENDED			
DESIGN MANAGER			CITY ENGINEER
DRAWING:			DATE:

FILE:
ATLAS PAGE NO. 235
SHEET 40 OF 161 SHEETS

PRINT DATE: 08/07/2020 M:\City_of_Tulsa\18TUL02_WZ6028_Tupelo_Creek_Drainage\Design\Drawings\18TUL02_ROW.dwg

NON–PARTICIPATING

ASSESSOR NUMBER	PARCEL NUMBER	LOT NUMBER	BLOCK NUMBER	OWNER	ADDRESS	PERMANENT EASEMENT	TEMPORARY CONSTRUCTION EASEMENT	RIGHT OF ENTRY	FEE SIMPLE	TYPE OF WORK
00190	14.1	19	1	GR UNIQUE INVESTMENT PROPERTIES LLC	11709 E 16 ST S		X	X		DRIVEWAYS (2), MAILBOX
00540		23	2	BREIEN, JACK E JR & KIMBERLEE M	1530 S 116 AVE			X		DRIVEWAY, MAILBOX, FENCE
00550		24	2	OLUSOGA, SAMELLA JANE AND ADESINMA TAJUDEEN	1524 S 116 AVE			X		DRIVEWAY, MAILBOX
00560		25	2	AMPARAN, FRANCISCO C MELENDEZ	1520 S 116 AVE			X		DRIVEWAY, MAILBOX
00570	21.1	26	2	HUD	1514 S 116 AVE		X	X		DRIVEWAY, MAILBOX
00580		27	2	TURLEY, THERESA LYNN	1510 S 116 AVE			X		DRIVEWAY, MAILBOX
00320		1	2	JAMES, QWATERRACES LAMAR	11532 E 15 ST S					N/A
00120		12	1	HAWKINS, HERBERT JR AND ARLENE B	11604 E 15 ST S					N/A
00130	20.1	13	1	HADDOCK, WILLIAM D & GLENITA R TRUSTEES HADDOCK FAMILY TRUST	1523 S 116 AVE		X	X		DRIVEWAY, MAILBOX, SANITARY SEWER
00140	19.1	14	1	MENDOZA, JAVIER	1529 S 116 AVE		X	X		DRIVEWAY, MAILBOX, SANITARY SEWER
00150	18.1	15	1	THORSEN, LARRY R AND PEGGY A	1533 S 116 AVE		X	X		DRIVEWAY, MAILBOX, SANITARY SEWER
00160	17.1	16	1	HOLMAN, WILLIAM EUGENE & MARY JO CO-TTEES HOLMAN FAMILY TRUST	1537 S 116 AVE		X	X		DRIVEWAY, MAILBOX, SANITARY SEWER
00200		20	1	MEDRANO, ELVIN OMAR OLIVA & LESBY YORLENY RAMIREZ PERDOMO	1516 S 117 AVE			X		DRIVEWAY, MAILBOX
00210		21	1	DIAZ, ALFREDO GARCIA	1510 S 117 AVE			X		DRIVEWAY, MAILBOX
00220		22	1	HARRIS, LEWANA M	1505 S 117 AVE			X		DRIVEWAY, MAILBOX
00230		23	1	POWERS, RAYMOND DEMPSEY REVOCABLE TRUST	1509 S 117 AVE			X		DRIVEWAY, MAILBOX
00240		24	1	LAGERS, DARRIN SCOTT AND SHANNON KAY	1515 S 117 AVE			X		DRIVEWAY, MAILBOX
01050		7	5	BROWN-MYERS LLC	1636 S 117 AVE			X		DRIVEWAY, MAILBOX
01040		6	5	GARCIA, FRANCISCO J	1642 S 117 AVE			X		DRIVEWAY, MAILBOX
01030		5	5	CASE, CLYDE J AND COLLEEN	1646 S 117 AVE			X		DRIVEWAY, MAILBOX
01020		4	5	OAK CREEK PROPERTIES LLC	1650 S 117 AVE			X		DRIVEWAY, MAILBOX
01010		3	5	FLORES, ERICA	11704 E 17 PL S			X		DRIVEWAY, MAILBOX
01000		2	5	WALKER, JENNIFER	11708 E 17 PL S			X		DRIVEWAY, MAILBOX
00990		1	5	RUSSELL, LILAH F TTEE LILAH F RUSSELL REV TRUST	11714 E 17 PL S			X		DRIVEWAY, MAILBOX
01630		11	7	GEARHART, STEVEN M & JUSTINE D	11726 E 17 PL S			X		DRIVEWAY, MAILBOX, SIDEWALK
01620		10	7	KING & KING PROPERTIES LLC	11730 E 17 PL S			X		DRIVEWAY, MAILBOX, SANITARY SEWER
01550	11.1	3	7	HIGHT, PEGGY	1621 S 118 AVE		X	X		DRIVEWAY, MAILBOX, SANITARY SEWER
01540	12.1	2	7	JRT ASSETS LLC	1615 S 118 AVE		X	X		DRIVEWAY, MAILBOX
01450		8	6	HANEY, MARY E	1641 S 117 AVE			X		DRIVEWAY, MAILBOX
01460		9	6	PADILLA, SONIA MARTINEZ	11715 E 17 PL S			X		DRIVEWAY, MAILBOX
01470		10	6	AGUIRRE, NOE VEGA	1648 S 118 AVE			X		DRIVEWAY, MAILBOX
01480		11	6	PAGE FAMILY REV TRUST C/O GARRY MARTIN PAGE TTEE	1642 S 118 AVE			X		DRIVEWAY, MAILBOX
01510		14	6	AMAYA, OSCAR BARRETO	1620 S 118 AVE			X		DRIVEWAY, MAILBOX
01520		15	6	EVANS, DARRELL LEE	1614 S 118 AVE			X		DRIVEWAY, MAILBOX
02530		28	10	MORRISON, ROGER M AND LUCY A	1622 S 119 AVE					N/A

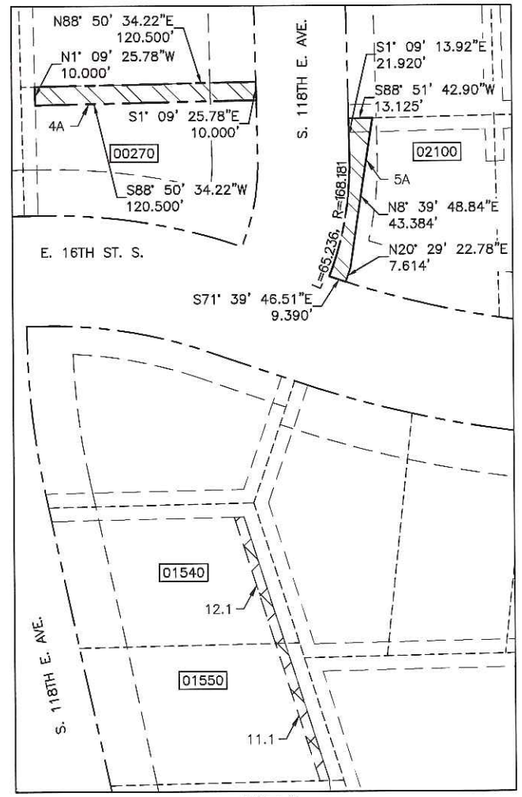

INSET 6
SCALE: 1"=40'

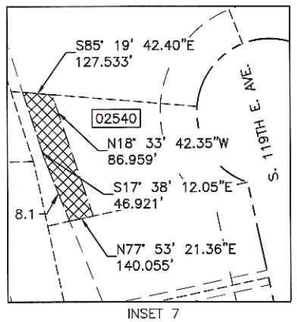

INSET 7
SCALE: 1"=50'

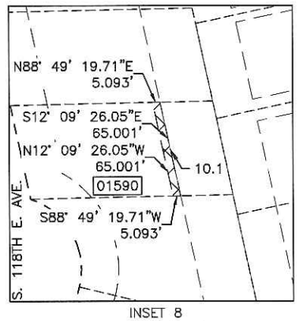

INSET 8
SCALE: 1"=50'

LICENSED PROFESSIONAL ENGINEER
BENJAMIN W. FLETCHER
PE
24921
OKLAHOMA

8/7/2020

RIGHT OF WAY

PROJECT #144628–W, TMUA–W 18–16

MAINTENANCE ZONE 6028–W
TUPELO CREEK DRAINAGE

CITY OF TULSA, OKLAHOMA
ENGINEERING SERVICES DEPARTMENT

PLANS AND ESTIMATES PREPARED BY:
Meshek & Associates, L.L.C.
1437 S. Boulder Avenue, Suite 1550 Tulsa, OK 74119 (918)392–5620

REVISION	BY	DATE

PLAN SCALE: N/A
PROFILE SCALE: N/A
HORIZONTAL: N/A
VERTICAL: N/A
FILE:
ATLAS PAGE NO. 235

DRAWN	SCB	08/20	APPROVED:
DESIGNED	BWF	08/20	
SURVEY	AB	08/18	
PROJ. MGR.			
LEAD ENGR.			
FIELD MGR.			
RECOMMENDED			
DESIGN MANAGER			CITY ENGINEER
DRAWING:			DATE:
			SHEET 41 OF 161 SHEETS

PRINT DATE: 08/07/2020 M:\City_of_Tulsa\18TUL02_MZ6028_Tupelo_Creek_Drainage\Design\Drawings\18TUL02_ROW.dwg



N

0 50 100 200
SCALE IN FEET

LEGEND

- SECTION LINE
- RIGHT-OF-WAY
- LOT LINE
- EXISTING BUILDING LINE
- EXISTING EASEMENT LINE
- BENCHMARK
- X — BLOCK NUMBER
- # — LOT NUMBER

LOCATION MAP

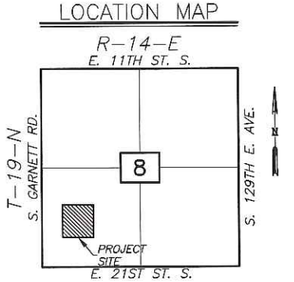

DATUM INFORMATION

HORIZONTAL DATUM
NAD '83 (1993 HARN)

VERTICAL DATUM
NAVD '88 (GEOID 12B)

ADS TD01 – 2" ALUM. CAP SET
N=*419709.839*
E=*2609721.761*
ELEV.=*717.90*

ADS #6 – 5/8" REBAR 1-1/2" ALUM. CAP
N=*425120.182*
E=*2613605.145*
ELEV.=*744.423*

SURVEY CONTROL

POINT	STATION	OFFSET	NORTHING	EASTING	ELEVATION	DESCRIPTION
BM-502	110+23.77	25.78LT	421748.45	2603791.04	659.50	CHISELED X
BM-503	409+09.09	26.67RT	421129.13	260458.13	666.88	CHISELED X
BM-20000	408+49.06	280.32 RT	420860.51	2604454.20	671.25	CHISELED X
BM-20018	32+99.77	184.76 RT	420847.73	2605470.39	676.96	PK NAIL SET
BM-20020	406+51.93	25.28RT	421139.06	2604240.39	666.65	PK NAIL SET
BM-20021	113+28.97	30.31LT	421819.77	2604098.25	660.44	CHISELED X
BM-20023	301+91.46	0.10LT	421984.48	2604280.30	663.74	PK NAIL SET
BM-20024	116+55.33	17.29LT	421813.68	2604424.73	662.42	CHISELED X
BM-20025	200+43.22	12.32LT	421830.06	2603975.10	658.98	CHISELED X
BM-20028	204+61.11	12.99LT	422144.53	2603727.05	656.82	CHISELED X
BM-20036	34+45.42	149.61 LT	421183.93	2605611.64	677.32	PK NAIL SET
BM-20037	27+13.99	161.24 LT	421178.81	2604881.10	667.81	PK NAIL SET
BM-20038	22+47.38	132.17 LT	421437.63	2604784.52	667.01	CHISELED X

SURVEYOR'S CERTIFICATE

I, AARON BURNS OF MESHEK & ASSOCIATES, LLC, A REGISTERED PROFESSIONAL LAND SURVEYOR IN THE STATE OF OKLAHOMA, DO HEREBY CERTIFY THE SURVEY PREPARED BY ME WAS ACTUALLY MADE UPON THE GROUND AND THAT IT AND THE INFORMATION SHOWN HEREON FOR ALL HORIZONTAL CONTROL POINTS IS A TRUE AND CORRECT REPRESENTATION OF THE SURVEY.

EXECUTED THIS 31st DAY OF JULY 2020

Aaron Burns

AARON BURNS
REGISTERED PROFESSIONAL LAND SURVEYOR
OKLAHOMA L.S. 1923

CERTIFICATE OF AUTHORIZATION NO. 1487
EXPIRES JUNE 30, 2021

LICENSED PROFESSIONAL LAND SURVEYOR — AARON BURNS L.S. 1923 — OKLAHOMA

OKIE 811 Know what's below. Call before you dig.

SURVEY DATA

PROJECT #144628-W, TMUA-W 18-16

MAINTENANCE ZONE 6028-W
TUPELO CREEK DRAINAGE

CITY OF TULSA, OKLAHOMA
ENGINEERING SERVICES DEPARTMENT

PLANS AND ESTIMATES PREPARED BY:
Meshek & Associates, L.L.C.
1437 S. Boulder Avenue, Suite 1550 Tulsa, OK 74119 (918)392-5620

REVISION	BY	DATE

PLAN SCALE	DRAWN	SCB	08/20	APPROVED:
1" = 100'	DESIGNED	BWF	08/20	
	SURVEY	AB	08/18	
PROFILE SCALE	PROJ. MGR.			
HORIZONTAL: N/A	LEAD ENGR.			
	FIELD MGR.			
VERTICAL: N/A	RECOMMENDED DESIGN MANAGER			CITY ENGINEER
FILE:	DRAWING:			DATE:
ATLAS PAGE NO. 235				SHEET 42 OF 161 SHEETS

PRINT DATE: 08/07/2020 M:\City_of_Tulsa\18TUL02_MZ6028_Tupelo_Creek_Drainage\Design\Drawings\18TUL02_SURVEY_DATA.dwg

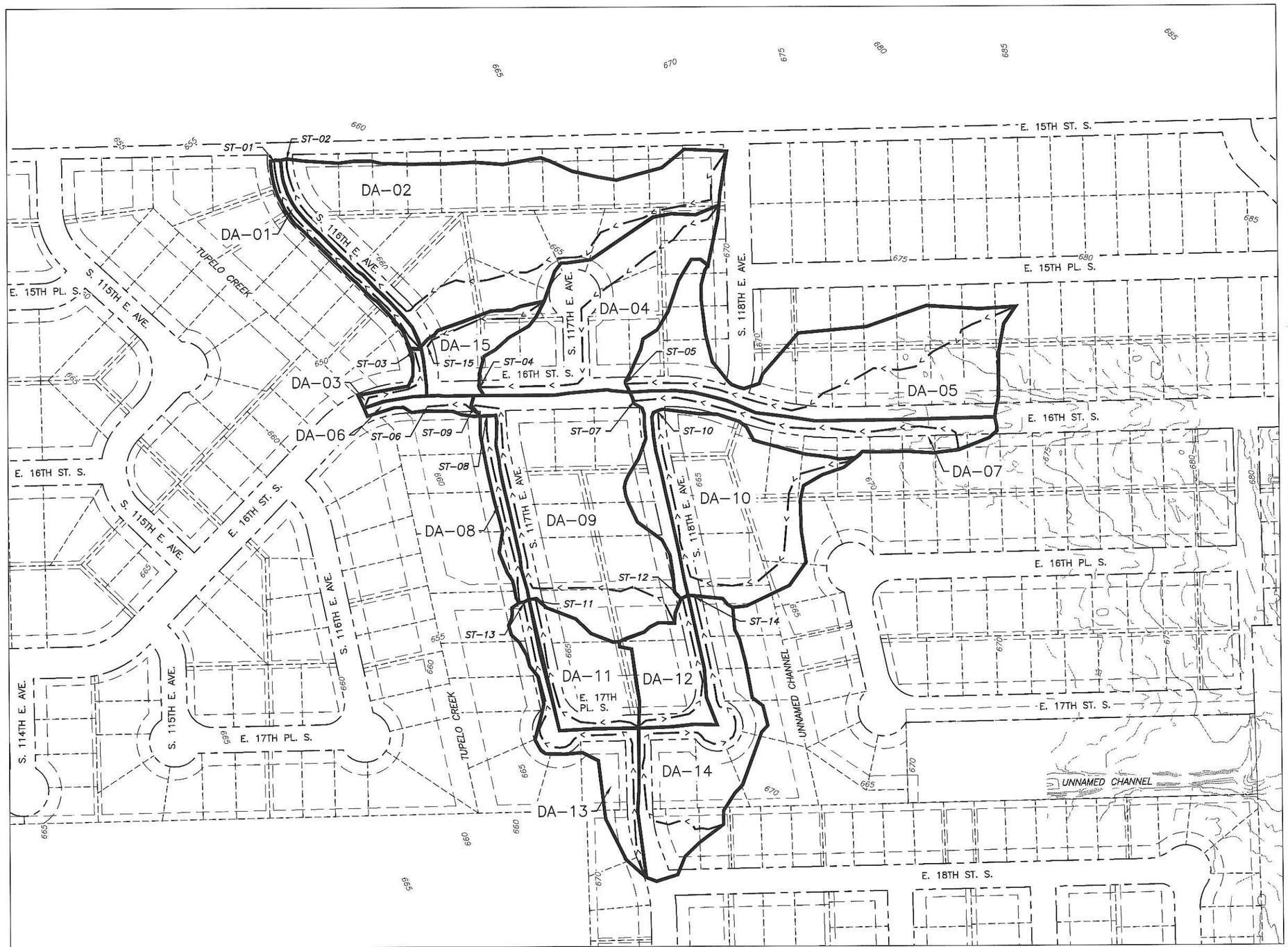

BENJAMIN W. FLETCHER
LICENSED PROFESSIONAL ENGINEER
24921
OKLAHOMA

8/7/2020

OKIE 811
Know what's below. Call before you dig.

DRAINAGE AREA MAP

PROJECT #144628-W, TMUA-W 18-16

MAINTENANCE ZONE 6028-W
TUPELO CREEK DRAINAGE

CITY OF TULSA, OKLAHOMA
ENGINEERING SERVICES DEPARTMENT

PLANS AND ESTIMATES PREPARED BY:
Meshek & Associates, L.L.C.
1437 S. Boulder Avenue, Suite 1550 Tulsa, OK 74119 (918)392-5620

REVISION	BY	DATE

PLAN SCALE	DRAWN	SCB	08/20
1" = 100'	DESIGNED	BWF	08/20
	SURVEY	AB	08/18
PROFILE SCALE	PROJ. MGR.		
HORIZONTAL: N/A	LEAD ENGR.		
	FIELD MGR.		
VERTICAL: N/A	RECOMMENDED		
	DESIGN MANAGER		
FILE:	DRAWING:		
ATLAS PAGE NO. 235			

APPROVED:

CITY ENGINEER

DATE:

SHEET 43 OF 161 SHEETS

PRINT DATE: 08/07/2020 M:\City_of_Tulsa\18TUL02_MZ6028_Tupelo_Creek_Drainage\Design\Drawings\18TUL02_DA_MAP.dwg

SUMMARY OF HYDROLOGIC DATA AND RUNOFF CALCULATIONS

COLLECTING STR NO.	D.A. NO.	AREA	INTENSITY						FACTORED RUNOFF COEFF.	DESIGN YEAR RUNOFF						OVERLAND FLOW (IN THE TOP 150 FEET)				SHALLOW CONCENTRATED FLOW (IN EXCESS OF 150 FEET)				TOTAL TIME OF CONCENTRATION
		A	I2	I5	I10	I25	I50	I100	C	Q2	Q5	Q10	Q25	Q50	Q100	FLOWPATH LENGTH	AVG SLOPE	VELOCITY	Ti	FLOWPATH LENGTH	AVG SLOPE	VELOCITY	Tt	Tc=Ti+Tt
		ACRES	IN/HR							CFS						LF	%	FPS	MIN	LF	%	FPS	MIN	MIN
ST-01	DA-01	0.21	5.55	6.39	7.73	9.08	9.83	11.13	0.55	0.634	0.730	0.883	1.037	1.123	1.271	32.0	1.34%	2.36	0.23	448.0	0.72%	1.73	4.3	4.55
ST-02	DA-02	4.05	4.31	5.10	6.19	7.27	8.07	9.14	0.57	9.929	11.729	14.247	16.724	18.574	21.027	100.0	1.20%	1.77	0.94	398.0	1.24%	1.95	9.9	10.00
ST-03	DA-03	0.11	6.37	7.22	8.71	10.22	10.88	12.32	0.90	0.610	0.690	0.833	0.978	1.041	1.179	21.0	4.76%	4.44	0.08	166.0	0.41%	1.30	2.1	2.21
ST-04	DA-04	1.98	5.34	6.17	7.48	8.78	9.55	10.81	0.60	6.388	7.383	8.945	10.500	11.419	12.927	100.0	2.00%	2.28	0.73	199.4	1.30%	2.16	4.5	5.27
ST-05	DA-05	2.71	5.24	6.06	7.35	8.63	9.40	10.65	0.59	8.438	9.773	11.845	13.905	15.154	17.155	100.0	2.00%	2.28	0.73	402.6	1.90%	2.49	4.9	5.66
ST-06	DA-06	0.13	5.40	6.23	7.55	8.86	9.63	10.90	0.83	0.583	0.673	0.815	0.957	1.040	1.177	23.0	3.04%	2.81	0.14	332.8	1.90%	2.49	4.9	5.06
ST-07	DA-07	1.22	6.61	7.45	8.98	10.54	11.17	12.65	0.67	5.353	6.035	7.273	8.538	9.046	10.241	100.0	1.70%	2.10	0.79	88.0	0.70%	1.71	0.9	1.65
ST-08	DA-08	0.23	5.35	6.19	7.49	8.80	9.56	10.83	0.69	0.851	0.983	1.191	1.398	1.520	1.720	50.0	2.80%	3.40	0.24	577.0	1.43%	1.93	5.0	5.22
ST-09	DA-09	2.90	4.72	5.53	6.71	7.88	8.68	9.83	0.61	8.375	9.805	11.901	13.970	15.386	17.418	100.0	2.00%	2.28	0.73	192.8	0.59%	1.46	7.1	7.83
ST-10	DA-10	2.06	4.42	5.21	6.33	7.43	8.23	9.32	0.62	5.641	6.648	8.074	9.478	10.503	11.890	100.0	2.00%	2.28	0.73	390.5	0.59%	1.39	8.7	9.39
ST-11	DA-11	0.82	6.08	6.93	8.37	9.82	10.52	11.91	0.61	3.042	3.464	4.185	4.913	5.262	5.957	0.0	0.00%	0.00	0.00	380.7	1.12%	2.15	3.0	2.95
ST-12	DA-12	0.65	5.07	5.89	7.15	8.39	9.17	10.39	0.62	2.064	2.399	2.909	3.414	3.734	4.227	0.0	0.00%	0.00	0.00	742.8	0.93%	1.96	6.3	6.30
ST-13	DA-13	0.72	4.77	5.58	6.77	7.95	8.75	9.91	0.67	2.317	2.710	3.289	3.860	4.247	4.808	0.0	0.00%	0.00	0.00	627.9	0.68%	1.62	7.6	7.60
ST-14	DA-14	1.65	7.18	8.01	9.63	11.30	11.84	13.40	0.61	7.266	8.104	9.739	11.433	11.974	13.556	61.0	1.64%	2.07	0.49	0.0	0.00%	0.00	0.0	0.49
ST-15	DA-15	0.50	7.18	8.01	9.62	11.30	11.83	13.39	0.62	2.203	2.457	2.952	3.466	3.630	4.110	59.0	1.49%	1.97	0.50	0.0	0.00%	0.00	0.0	0.50

SUMMARY OF INLET DESIGN

STR NO.	DESIGN	NUMBER OF GRATES	NUMBER OF HOODS	TOP OF GRATE	FLOWLINE	INNER STR HEIGHT	LONGITUDINAL SLOPE AT INLET	CROSS SLOPE AT INLET	CLOGGING FACTOR	Q100	QCARRYOVER	SUM Q AT INLET	SPREAD AT INLET	DEPTH AT INLET	QINTERCEPT	QBYPASS	QBYPASS TARGET STR. NO.	INLET EFFICIENCY
				FT	FT	VF	%	%		CFS	CFS	CFS	FT	FT	CFS	CFS		%
ST-01	DESIGN 2	2	0	655.17	652.45	2.72	2.00	3.125%	0.70	1.27	0.0	1.31	12.16	0.38	1.31	-	-	100.0%
ST-02	DESIGN 5(2B)	5	4	655.78	652.53	3.25	5.00	3.125%	0.70	21.03	0.0	21.03	12.16	0.38	21.03	-	-	100.0%
ST-03	DESIGN 2(B) W/ACCESS MH	2	2	658.26	654.84	3.42	0.00	3.125%	1.00	1.18	0.0	1.18	6.34	0.20	1.14	0.04	ST-01	96.4%
ST-04	DESIGN 5(H) W/ACCESS MH	5	8	659.47	653.63	5.84	0.01	3.125%	1.00	12.93	0.4	13.37	14.01	0.44	13.25	0.12	ST-15	99.1%
ST-05	DESIGN 5(H) W/ACCESS MH	5	8	661.67	657.02	4.65	0.01	3.125%	1.00	17.16	0.0	17.16	15.07	0.47	16.71	0.44	ST-04	97.4%
ST-06	DESIGN 2	2	0	658.93	655.13	3.8	2.00	3.125%	0.70	1.18	3.1	4.26	12.16	0.38	4.26	-	-	100.0%
ST-07	DESIGN 5(H)	5	8	661.66	658.23	3.43	0.01	3.125%	1.00	10.24	0.2	10.48	12.52	0.39	10.46	0.01	ST-09	99.9%
ST-08	DESIGN 4	4	0	659.88	655.60	4.28	0.01	3.125%	1.00	1.72	0.0	1.72	6.85	0.21	1.69	0.03	ST-09	98.1%
ST-09	DESIGN 5(B)	5	2	659.47	655.36	4.11	0.01	3.125%	1.00	17.42	0.5	17.95	15.65	0.49	15.07	2.88	ST-06	84.0%
ST-10	DESIGN 5(H)	5	8	662.42	658.22	4.2	0.01	3.125%	1.00	11.89	0.1	11.98	13.29	0.42	11.93	0.06	ST-07	99.5%
ST-11	DESIGN 5	5	0	662.30	656.98	5.32	0.01	3.125%	1.00	5.96	0.0	5.96	9.83	0.31	5.66	0.30	ST-09	95.0%
ST-12	DESIGN 4(B)	4	2	663.94	657.66	6.28	0.01	3.125%	1.00	4.23	0.0	4.23	9.86	0.31	4.05	0.18	ST-07	95.7%
ST-13	DESIGN 4(B) W/ACCESS MH	4	2	662.28	656.75	5.53	0.01	3.125%	1.00	4.81	0.0	4.81	9.07	0.28	4.62	0.19	ST-09	96.1%
ST-14	DESIGN 5(H)	5	8	663.95	657.15	6.8	0.01	3.125%	1.00	13.56	0.0	13.56	15.27	0.48	13.46	0.09	ST-10	99.3%
ST-15	DESIGN 4(B)	4	2	658.26	655.00	3.26	0.00	3.125%	1.00	4.11	0.1	4.23	10.24	0.32	4.03	0.20	ST-06	95.3%

SUMMARY OF PIPE DESIGN

UPSTREAM STR NO.	DOWNSTREAM STR NO.	PROPOSED - EXISTING	SHAPE	DIAM	LENGTH	SLOPE	INV UP	INV DN	RIM or T/G UP	RIM or T/G DN	HGL UP	HGL DN	EGL UP	EGL DN	Q100	QCAPACITY	VELOCITY
				INCH	LF	%	FT	FT	FT	FT	FT	FT	FT	FT	CFS	CFS	FPS
ST-01	MH-07	PROPOSED	ROUND	24	30.0	0.33	652.45	652.35	655.17	656.45	654.64	654.35	655.43	655.14	22.34	13.07	7.11
ST-02	ST-01	PROPOSED	ROUND	24	22.4	0.36	652.53	652.45	655.78	655.17	655.31	655.11	656.00	655.81	21.03	13.52	6.69
ST-03	PR. 10'X6' RCB	PROPOSED	ROUND	18	41.8	0.50	654.84	654.63	658.26	659.04	656.82	656.71	656.96	656.85	5.41	7.44	3.06
ST-04	PR. 10'X6' RCB	PROPOSED	ROUND	36	3.6	0.83	653.63	653.60	659.47	660.11	657.99	657.99	658.05	658.05	13.37	61.22	1.89
ST-05	PR. 30" PIPE	PROPOSED	ROUND	30	8.0	0.90	657.02	656.95	661.67	659.47	658.47	658.04	659.04	658.23	17.16	44.55	6.06
PR. 30" PIPE	ST-05	PROPOSED	ROUND	30	10.6	0.94	657.15	657.05	661.98	661.67	658.52	658.47	659.04	659.04	17.16	44.72	6.06
ST-06	PR. 10'X6' RCB	PROPOSED	ROUND	18	17.7	0.73	655.13	655.00	658.93	659.57	657.47	657.44	657.56	657.53	4.26	9.01	3.18
ST-07	MH-01	PROPOSED	ROUND	18	13.6	0.51	658.23	658.16	661.66	662.21	660.26	660.12	660.80	660.67	10.48	7.54	8.01
ST-08	PR. 10'X6' RCB	PROPOSED	ROUND	18	4.8	0.42	655.60	655.58	659.88	659.75	658.54	658.54	658.56	658.55	1.72	6.78	0.97
ST-09	PR. 10'X6' RCB	PROPOSED	ROUND	18	7.7	0.52	655.36	655.32	659.47	660.11	658.22	657.99	659.82	659.60	17.95	7.57	10.16
ST-10	MH-02	PROPOSED	ROUND	24	37.9	0.50	658.22	658.03	662.42	663.31	660.58	660.47	660.80	660.70	11.98	16.02	11.92
ST-11	ST-13	PROPOSED	ROUND	18	22.4	1.03	656.98	656.75	662.30	662.28	658.35	658.30	658.54	658.47	5.96	10.64	6.06
ST-12	MH-04	PROPOSED	ROUND	18	9.9	0.61	657.66	657.60	663.94	664.34	661.75	661.74	661.84	661.83	4.23	8.19	2.39
ST-13	ST. NO. 2	PROPOSED	ROUND	18	31.9	1.19	656.75	656.37	662.28	662.29	658.01	657.53	658.73	658.37	10.77	11.46	5.26
ST-14	MH-04	PROPOSED	ROUND	24	9.1	0.55	657.15	657.10	663.95	664.34	661.77	661.74	662.06	662.03	13.56	16.73	4.32
ST-15	ST-03	PROPOSED	ROUND	18	23.0	0.70	655.00	654.84	658.26	658.28	656.94	656.90	657.03	656.99	4.23	8.76	2.39
MH-01	ST-05	PROPOSED	ROUND	24	14.2	0.49	657.65	657.58	662.21	661.67	659.54	659.27	660.37	660.25	22.46	15.89	7.93
MH-02	MH-01	PROPOSED	ROUND	24	75.5	0.50	658.03	657.65	663.31	662.21	660.33	660.12	660.56	660.35	11.98	16.05	11.01
MH-04	PR. 10'X6' RCB	PROPOSED	ROUND	24	19.1	0.52	657.10	657.00	664.34	664.31	661.49	661.37	661.99	661.87	17.79	16.36	5.66

INLET LOCATION SUMMARY

STRUCTURE ID	NORTHING	EASTING	TOP OF GRATE
ST-1	422251.59	2603689.54	655.17
ST-2	422246.34	2603715.81	655.78
ST-3	421879.78	2603966.30	658.26
ST-4	421807.21	2604073.82	659.47
ST-5	421813.15	2604364.22	661.67
ST-6	421769.46	2603989.18	658.93
ST-7	421777.15	2604364.47	661.66
ST-8	421747.24	2604106.34	659.88
ST-9	421771.27	2604079.29	659.47
ST-10	421748.06	2604445.34	662.42
ST-11	421370.99	2604206.05	662.30
ST-12	421436.37	2604479.24	663.94
ST-13	421368.16	2604180.06	662.28
ST-14	421438.71	2604505.34	663.95
ST-15	421887.59	2603991.10	658.26

MANHOLE LOCATION SUMMARY

STRUCTURE ID	NORTHING	EASTING	RIM
ST. NO. 2	421409.31	2604165.25	662.29
MH-1	421795.15	2604364.34	662.21
MH-2	421796.79	2604444.21	663.31
MH-4	421435.93	2604492.64	664.34
MH-7	422286.74	2603689.15	656.45

PRINT DATE: 08/07/2020 M:\City_of_Tulsa\18TUL02_MZ6028_Tupelo_Creek_Drainage\Design\Drawings\18TUL02_DA_MAP.dwg

BENJAMIN W. FLETCHER 24921 REGISTERED PROFESSIONAL ENGINEER OKLAHOMA

8/7/2020

OKIE 811 Know what's below Call before you dig.

STORM SEWER STRUCTURE SUMMARY

PROJECT #144628-W, TMUA-W 18-16

MAINTENANCE ZONE 6028-W
TUPELO CREEK DRAINAGE

CITY OF TULSA, OKLAHOMA
ENGINEERING SERVICES DEPARTMENT

PLANS AND ESTIMATES PREPARED BY:
Meshek & Associates, L.L.C.
1437 S. Boulder Avenue, Suite 1550 Tulsa, OK 74119 (918)392-5620

REVISION	BY	DATE

PLAN SCALE	DRAWN	SCB	08/20	APPROVED:
N/A	DESIGNED	BWF	08/20	
	SURVEY	AB	08/18	
PROFILE SCALE	PROJ. MGR.			
HORIZONTAL: N/A	LEAD ENGR.			
	FIELD MGR.			
VERTICAL: N/A	RECOMMENDED DESIGN MANAGER			CITY ENGINEER
FILE:	DRAWING:			DATE:
ATLAS PAGE NO. 235				SHEET 44 OF 161 SHEETS

PARTICIPATING

SUMMARY OF DRAINAGE STRUCTURES - PARTICIPATING

STRUCTURE UP NO.	STRUCTURE DOWN NO.	UPSTREAM CRL STATION	DESCRIPTION	DESIGN STANDARD	TOP OF COVER/GRATE ELEV.	FLOWLINE ELEVATION	EXCAVATION AND BACKFILL					CLASS AA CONC.	REINF. STEEL	STORM SEWER PIPE MATERIAL OPTION ✳				INLETS									ADD'L DEPTH IN INLETS					MANHOLES		ADD'L DEPTH IN MANHOLES
														RCP OR CPP				CICI						CICI W/AMH			CICI			CICI W/AMH		4' ID	5' ID	5' ID
							BEDDING MATERIAL	TRENCH EXCAV.	STRUCT. EXCAV.	UNC. EXCAV.	AGG. BACKFILL			18"	24"	30"	36"	DES. 2	DES. 4	DES. 4(B)	DES. 5	DES. 5(B)	DES. 5(H)	DES. 2(B)	DES. 4(B)	DES. 5(H)	DES. 2	DES. 4	DES. 5	DES. 4	DES. 5			
							613(A) OR (SP) COT 215					611(G)															611(H)					611(A)		611(B)
							CY	CY	CY	CY	CY	CY	LB	LF				EA									VF					EA		EA
ST-03	PR. 10'X6' RCB	200+97.21	CONST. CICI DES. 2(B) W/ACCESS MH W/ 41.8 LF OF 18" PIPE 13.00' L	COT-751, COT-769A	658.26	654.84	16.8	31.0	0.0	14.4	0.0	0.0	0.0	41.8	0.0	0.0	0.0	0	0	0	0	0	0	1	0	0	0	0	0	0	0	0	0	0	0
ST-04	PR. 10'X6' RCB	113+04.16	CONST. CICI DES. 5(H) W/ACCESS MH W/ 3.6 LF OF 36" PIPE 18.01' L	COT-751, COT-769A	659.47	653.63	3.4	6.3	0.0	51.1	1.6	0.0	0.0	0.0	0.0	0.0	3.6	0	0	0	0	0	0	0	0	1	0	0	0	0	2.13	0	0	0
ST-06	PR. 10'X6' RCB	112+18.77	CONST. CICI DES. 2 W/ 17.7 LF OF 18" PIPE 17.99' R	COT-751, COT-769A	658.93	655.13	7.1	12.2	0.0	8.4	3.7	0.0	0.0	17.7	0.0	0.0	0.0	1	0	0	0	0	0	0	0	0	0.1	0	0	0	0	0	0	0
ST-08	PR. 10'X6' RCB	400+42.61	CONST. CICI DES. 4 W/ 4.8 LF OF 18" PIPE 12.97' R	COT-751, COT-769A	659.88	655.60	1.9	3.4	0.0	13.2	1.2	0.0	0.0	4.8	0.0	0.0	0.0	0	1	0	0	0	0	0	0	0	0	0.6	0	0	0	0	0	0
ST-09	PR. 10'X6' RCB	113+08.89	CONST. CICI DES. 5(B) W/ 7.7 LF OF 18" PIPE 18.03' R	COT-751, COT-769A	659.47	655.36	3.1	5.7	0.0	16.6	1.8	0.0	0.0	7.7	0.0	0.0	0.0	0	0	0	0	1	0	0	0	0	0	0	0.4	0	0	0	0	0	0
ST-11	ST-13	404+29.48	CONST. CICI DES. 5 W/ 22.4 LF OF 18" PIPE 13.00' L	COT-751, COT-769A	662.30	656.98	9.0	21.6	0.0	16.9	10.3	0.0	0.0	22.4	0.0	0.0	0.0	0	0	0	1	0	0	0	0	0	0	0	1.6	0	0	0	0	0	0
ST-12	MH-04	412+12.35	CONST. CICI DES. 4(B) W/ 9.9 LF OF 18" PIPE 13.00' L	COT-751, COT-769A	663.94	657.66	4.0	10.6	0.0	22.0	6.6	0.0	0.0	9.9	0.0	0.0	0.0	0	0	1	0	0	0	0	0	0	0	2.6	0	0	0	0	0	0
ST-13	ST. NO. 2	404+26.75	CONST. CICI DES. 4(B) W/ACCESS MH W/ 31.9 LF OF 18" PIPE 13.00' R	COT-751, COT-769A	662.28	656.75	12.8	31.9	0.0	27.2	0.0	0.0	0.0	31.9	0.0	0.0	0.0	0	0	0	0	0	0	0	1	0	0	0	0	1.82	0	1	0	0
ST-14	MH-04	412+09.13	CONST. CICI DES. 5(H) W/ 9.1 LF OF 24" PIPE 13.00' R	COT-751, COT-769A	663.95	657.15	5.1	13.5	0.0	37.9	8.0	0.0	0.0	0.0	9.1	0.0	0.0	0	0	0	0	0	1	0	0	0	0	3.1	0	0	0	0	0	0
ST-15	ST-03	200+97.16	CONST. CICI DES. 4(B) W/ 23 LF OF 18" PIPE 13.00' R	COT-751, COT-769A	658.26	655.00	9.2	15.3	0.0	10.2	3.5	0.0	0.0	23.0	0.0	0.0	0.0	0	0	1	0	0	0	0	0	0	0	0	0	0	0	0	0	0	0
MH-04	PR. 10'X6' RCB	412+09.09	CONST. 5' I.D. MANHOLE W/ 19.1 LF OF 24" PIPE 0.00'	COT-751, COT-769A	664.34	657.10	10.7	28.3	0.0	8.9	14.3	0.0	0.0	0.0	19.1	0.0	0.0	0	0	0	0	0	0	0	0	0	0	0	0	0	0	0	1	2.2
EX. 30" RCP	ST-04	113+30.13	CONST. 24 LF OF 30" PIPE 23.20' L	COT-751, COT-769A	659.47	653.63	10.8	46.2	0.0	0.0	0.0	0.0	0.0	0.0	0.0	24.0	0.0	0	0	0	0	0	0	0	0	0	0	0	0	0	0	0	0	0	0
STRUCTURE NO. 3	STRUCTURE NO. 1	22+67.57	CONST. 2-10'X6' RCB	ODOT RCB-C2-10(2-12) SBI-4	664.32	2-10'X6' RCB 656.27	0.0	0.0	1084.1	13303.4	1096.2	2866.4	404117.4	0.0	0.0	0.0	0.0	0	0	0	0	0	0	0	0	0	0	0	0	0	0	0	0	0
						TOTALS	94.0	226.0	1084.1	13530.2	1147.2	2866.4	404117.4	159.2	28.2	24.0	3.6	1	1	2	1	1	1	1	1	1	1	7	3	2	3	1	1	3

✳ STORM SEWER PIPE OPTIONS: REINFORCED CONCRETE PIPE (ROUND) CLASS III OR CORRUGATED POLYPROPYLENE PIPE (ROUND)

LICENSED PROFESSIONAL ENGINEER
BENJAMIN W. FLETCHER
24921
OKLAHOMA

8/7/2020

OKIE 811
Know what's below. Call before you dig.

STORM SEWER
STRUCTURE SUMMARY

PROJECT #144628-W, TMUA-W 18-16

MAINTENANCE ZONE 6028-W
TUPELO CREEK DRAINAGE

CITY OF TULSA, OKLAHOMA
ENGINEERING SERVICES DEPARTMENT

PLANS AND ESTIMATES PREPARED BY:
Meshek & Associates, L.L.C.
1437 S. Boulder Avenue, Suite 1550 Tulsa, OK 74119 (918)392-5620

REVISION	BY	DATE

PLAN SCALE	DRAWN	SCB	08/20
N/A	DESIGNED	BWF	08/20
	SURVEY	AB	08/18
PROFILE SCALE	PROJ. MGR.		
HORIZONTAL: N/A	LEAD ENGR.		
	FIELD MGR.		
VERTICAL: N/A	RECOMMENDED		
	DESIGN MANAGER		
FILE:	DRAWING:		
ATLAS PAGE NO. 235			

APPROVED:

CITY ENGINEER

DATE:

SHEET 45 OF 161 SHEETS

PRINT DATE: 08/07/2020 M:\City_of_Tulsa\18TUL02-MZ6028_Tupelo_Creek_Drainage\Design\Drawings\18TUL02_DA_MAP.dwg

NON–PARTICIPATING

SUMMARY OF DRAINAGE STRUCTURES - NON-PARTICIPATING

STRUCTURE UP NO.	STRUCTURE DOWN NO.	UPSTREAM CRL STATION	DESCRIPTION	DESIGN STANDARD	TOP OF COVER/GRATE ELEV.	FLOWLINE ELEVATION	EXCAVATION AND BACKFILL				STORM SEWER PIPE MATERIAL OPTION ✳			INLETS				ADD'L DEPTH IN INLETS	MANHOLES		ADD'L DEPTH IN MANHOLES
											RCP OR CPP			CICI			CICI W/AMH	CICI W/AMH	5' ID	6' ID	5' ID
							BEDDING MATERIAL	TRENCH EXCAV.	UNC. EXCAV.	AGG. BACKFILL	18"	24"	30"	DES. 2	DES. 5(2B)	DES. 5(H)	DES. 5(H)	DES. 5			
							613(A) OR (SP) COT 215							611(G)				611(H)	611(A)		611(B)
							CY	CY	CY	CY	LF			EA				VF	EA		EA
ST-01	MH-07	205+68.69	CONST. CICI DES. 2 W/ 30 LF OF 24" PIPE 12.96' L	COT-751, COT-769A	655.17	652.45	14.0	25.0	5.7	2.8	0.0	30.0	0.0	1	0	0	0	0	0	0	0
ST-02	ST-01	205+53.36	CONST. CICI DES. 5(2B) W/ 22.4 LF OF 24" PIPE 13.00' R	COT-751, COT-769A	655.78	652.53	10.4	18.7	19.6	0.9	0.0	22.4	0.0	0	1	0	0	0	0	0	0
ST-05	PR. 30" PIPE	115+94.62	CONST. CICI DES. 5(H) W/ACCESS MH W/ 8 LF OF 30" PIPE 18.00' L	COT-751, COT-769A	661.67	657.07	4.1	11.6	29.9	0.0	0.0	0.0	8.0	0	0	0	1	0.89	0	0	0
ST-07	MH-01	115+94.13	CONST. CICI DES. 5(H) W/ 13.6 LF OF 18" PIPE 18.00' R	COT-751, COT-769A	661.66	658.23	5.5	9.1	21.7	2.5	13.6	0.0	0.0	0	0	1	0	0	0	0	0
ST-10	MH-02	415+26.86	CONST. CICI DES. 5(H) W/ 37.9 LF OF 24" PIPE 13.19' R	COT-751, COT-769A	662.42	658.22	17.7	38.6	27.2	13.5	0.0	37.9	0.0	0	0	1	0	0.49	0	0	0
MH-01	ST-05	115+94.38	CONST. 5' I.D. MANHOLE W/ 14.2 LF OF 24" PIPE 0.00'	COT-751, COT-769A	662.21	657.65	6.6	17.1	6.6	3.1	0.0	14.2	0.0	0	0	0	0	0	1	0	0
MH-02	MH-01	116+74.26	CONST. 5' I.D. MANHOLE W/ 75.5 LF OF 24" PIPE 0.00'	COT-751, COT-769A	663.31	658.03	35.2	80.4	7.6	21.2	0.0	75.5	0.0	0	0	0	0	0	1	0	0.28
MH-07	PR. 24" PIPE	206+03.62	CONST. 6' I.D. MANHOLE W/ 8 LF OF 24" PIPE 12.76' L	COT-751, COT-769A	656.45	652.35	3.2	5.3	7.6	1.5	0.0	8.0	0.0	0	0	0	0	0	0	1	0
EX. 18" RCP	MH-07	206+03.76	CONST. 8 LF OF 18" PIPE 16.10' L	COT-751, COT-769A	656.45	652.35	3.2	5.3	0.0	1.5	8.0	0.0	0.0	0	0	0	0	0	0	0	0
EX. MH	ST-05	116+08.92	CONST. 10.6 LF OF 30" PIPE 23.48' L	COT-751, COT-769A	662.42	657.17	5.5	15.3	0.0	0.0	0.0	0.0	10.6	0	0	0	0	0	0	0	0
						TOTALS	105.4	226.4	125.9	47.0	21.6	188.0	18.6	1	1	2	1	2	2	1	1

✳ STORM SEWER PIPE OPTIONS: REINFORCED CONCRETE PIPE (ROUND) CLASS III OR CORRUGATED POLYPROPYLENE PIPE (ROUND)

LICENSED PROFESSIONAL ENGINEER
BENJAMIN W. FLETCHER
24921
OKLAHOMA

8/7/2020

OKIE 811
Know what's below. Call before you dig.

STORM SEWER
STRUCTURE SUMMARY

PROJECT #144628–W, TMUA–W 18–16

MAINTENANCE ZONE 6028–W
TUPELO CREEK DRAINAGE

CITY OF TULSA, OKLAHOMA
ENGINEERING SERVICES DEPARTMENT

PLANS AND ESTIMATES PREPARED BY:
Meshek & Associates, L.L.C.
1437 S. Boulder Avenue, Suite 1550 Tulsa, OK 74119 (918)392–5620

REVISION	BY	DATE

PLAN SCALE N/A	DRAWN	SCB	08/20	APPROVED:
	DESIGNED	BWF	08/20	
	SURVEY	AB	08/18	
PROFILE SCALE HORIZONTAL: N/A VERTICAL: N/A	PROJ. MGR.			
	LEAD ENGR.			
	FIELD MGR.			
	RECOMMENDED DESIGN MANAGER			CITY ENGINEER
FILE:	DRAWING:			DATE:
ATLAS PAGE NO. 235				SHEET 46 OF 161 SHEETS

PRINT DATE: 08/07/2020 M:\City_of_Tulsa\16TUL02_WZ6028_Tupelo_Creek_Drainage\Design\Drawings\16TUL02_DA_MAP.dwg

STORM WATER MANAGEMENT PLAN

SITE DESCRIPTION

PROJECT LIMITS: PROJECT IS LOCATED IN SECTION 8 OF TOWNSHIP 19 NORTH, RANGE 14 EAST. THE PROJECT IS BOUND BY S. GARNETT RD. AND S. 122ND E. AVE. AT THE WEST AND EAST, RESPECTIVELY AND E. 15TH ST. S. AND E. 21ST ST. S. AT THE NORTH AND SOUTH, RESPECTIVELY.

PROJECT DESCRIPTION: REHABILITATION OF RESIDENTIAL ROADWAY IN MAINTENANCE ZONE 6028-W AND TUPELO CREEK CHANNEL. PROJECT WILL INCLUDE GRADING, DRAINAGE IMPROVEMENTS, EROSION CONTROL, PAVEMENT REHABILITATION, WATERLINE AND SANITARY SEWER WORK.

SUGGESTED SEQUENCE OF EROSION CONTROL ACTIVITIES:

1. TEMPORARY EROSION CONTROL
2. WATERLINE AND SANITARY SEWER RELOCATIONS.
3. CHANNEL CLEARING AND GRADING
4. CHANNEL RECONSTRUCTION
5. PAVEMENT REMOVAL
6. PAVEMENT RECONSTRUCTION
7. PERMANENT EROSION CONTROL

SOIL TYPE: LEAN AND FAT CLAY, SILTY SAND.

TOTAL AREA OF THE CONSTRUCTION SITE: 6.02 ACRES

ESTIMATED AREA TO BE DISTURBED: 3.16 ACRES

OFFSITE AREA TO BE DISTURBED: (FOR CONTRACTOR USE)

TOTAL IMPERVIOUS AREA PRE-CONSTRUCTION: 2.58 ACRES

TOTAL IMPERVIOUS AREA POST-CONSTRUCTION: 2.58 ACRES

POST-CONSTRUCTION RUNOFF COEFFICIENT OF THE SITE: 0.85

LATITUDE & LONGITUDE OF CENTER OF PROJECT: 36° 08' 18.2" N, 95° 50' 47.3" W

PROJECT WILL DISCHARGE TO:

NAME OF RECEIVING WATERS: TUPELO CREEK

SENSITIVE WATERS OR WATERSHEDS: YES [NO]

303 IMPAIRED WATERS: YES [NO]

IF YES, LIST IMPAIRMENT:

LOCATED IN A TMDL: YES [NO]

LAKE THUNDERBIRD TMDL: YES [NO]

MS4 ENTITY YES [NO]

IF YES, LOCATION:

NOTE:
THIS SHEET SHOULD BE USED IN CONJUNCTION WITH A DRAINAGE MAP THAT ILLUSTRATES THE DRAINAGE PATTERNS/PATHWAYS AND RECEIVING WATERS FOR THIS PROJECT. THIS SHEET SHOULD ALSO BE USED WITH THE EROSION CONTROL SUMMARIES, PAY ITEMS, & NOTES.

EROSION AND SEDIMENT CONTROLS

SOIL STABILIZATION PRACTICES:

- ____ TEMPORARY SEEDING
- _X_ PERMANENT SODDING, SPRIGGING OR SEEDING
- ____ VEGETATIVE MULCHING
- ____ SOIL RETENTION BLANKET
- _X_ PRESERVATION OF EXISTING VEGETATION

NOTE: TEMPORARY EROSION CONTROL METHODS MUST BE USED ON ALL DISTURBED AREAS WHERE CONSTRUCTION ACTIVITIES HAVE CEASED FOR OVER 14 DAYS. METHODS USED WILL BE AS SHOWN ON PLANS, OR AS DIRECTED BY THE ENGINEER.

STRUCTURAL PRACTICES:

- ____ STABILIZED CONSTRUCTION EXIT
- _X_ TEMPORARY SILT FENCE
- _X_ TEMPORARY SILT DIKES
- ____ TEMPORARY FIBER LOG
- ____ DIVERSION, INTERCEPTOR OR PERIMETER DIKES
- ____ DIVERSION, INTERCEPTOR OR PERIMETER SWALES
- ____ ROCK FILTER DAMS
- ____ TEMPORARY SLOPE DRAIN
- ____ PAVED DITCH W/ DITCH LINER PROTECTION
- ____ TEMPORARY DIVERSION CHANNELS
- ____ TEMPORARY SEDIMENT BASINS
- ____ TEMPORARY SEDIMENT TRAPS
- ____ TEMPORARY SEDIMENT FILTERS
- _X_ TEMPORARY SEDIMENT REMOVAL
- ____ RIP RAP
- ____ INLET SEDIMENT FILTER
- ____ TEMPORARY BRUSH SEDIMENT BARRIERS
- ____ SANDBAG BERMS
- ____ TEMPORARY STREAM CROSSINGS

OFFSITE VEHICLE TRACKING:

- _X_ HAUL ROADS DAMPENED FOR DUST CONTROL
- _X_ LOADED HAUL TRUCKS TO BE COVERED WITH TARPAULIN
- _X_ EXCESS DIRT ON ROAD REMOVED DAILY

NOTES:

THE CONTRACTOR SHALL ALSO BE RESPONSIBLE FOR THE FOLLOWING:

MAINTENANCE AND INSPECTION:
ALL EROSION AND SEDIMENT CONTROLS WILL BE MAINTAINED IN GOOD WORKING ORDER FROM THE BEGINNING OF CONSTRUCTION UNTIL AN ACCEPTABLE VEGETATIVE COVER IS ESTABLISHED. INSPECTION BY THE CONTRACTOR AND ANY NECESSARY REPAIRS SHALL BE PERFORMED ONCE EVERY 7 CALENDAR DAYS AND WITHIN 24 HOURS AFTER ANY STORM EVENT GREATER THAN 0.5 INCH AS RECORDED BY A NON-FREEZING RAIN GAUGE TO BE LOCATED ON SITE. POTENTIALLY ERODIBLE AREAS, DRAINAGEWAYS, MATERIAL STORAGE, STRUCTURAL DEVICES, CONSTRUCTION ENTRANCES AND EXITS ALONG WITH EROSION AND SEDIMENT CONTROL LOCATIONS ARE EXAMPLES OF SITES THAT NEED TO BE INSPECTED.

WASTE MATERIALS:
PROPER MANAGEMENT AND DISPOSAL OF CONSTRUCTION WASTE MATERIAL IS REQUIRED BY THE CONTRACTOR. MATERIALS INCLUDE STOCKPILES, SURPLUS, DEBRIS AND ALL OTHER BY-PRODUCTS FROM THE CONSTRUCTION PROCESS. PRACTICES INCLUDE DISPOSAL, PROPER MATERIALS HANDLING, SPILL PREVENTION AND CLEANUP MEASURES. CONTROLS AND PRACTICES SHALL MEET THE REQUIREMENTS OF ALL FEDERAL, STATE AND LOCAL AGENCIES.

HAZARDOUS MATERIALS:
PROPER MANAGEMENT AND DISPOSAL OF HAZARDOUS WASTE MATERIALS IS REQUIRED. THE CONTRACTOR IS RESPONSIBLE FOR FOLLOWING MANUFACTURER'S RECOMMENDATIONS, STATE AND FEDERAL REGULATIONS TO ENSURE CORRECT HANDLING, DISPOSAL, SPILL PREVENTION AND CLEANUP MEASURES. EXAMPLES INCLUDE BUT ARE NOT LIMITED TO: PAINTS, ACIDS, CLEANING SOLVENTS, CHEMICAL ADDITIVES, CONCRETE CURING COMPOUNDS AND CONTAMINATED SOILS.

GENERAL NOTES:
A STORM WATER POLLUTION PREVENTION PLAN (SWPPP) IS REQUIRED TO COMPLY WITH THE OKLAHOMA POLLUTION DISCHARGE ELIMINATION SYSTEM (OPDES) REGULATIONS. THIS PLAN IS INITIATED DURING THE DESIGN PHASE, CONFIRMED IN THE PRE-WORK MEETINGS AND AVAILABLE ON THE JOB SITE ALONG WITH COPIES OF THE NOTICE OF INTENT (NOI) FORM AND PERMIT CERTIFICATE THAT HAVE BEEN FILED WITH THE OKLAHOMA DEPARTMENT OF ENVIRONMENTAL QUALITY (ODEQ). THE PLAN MUST BE KEPT CURRENT WITH UP-TO-DATE AMENDMENTS DURING THE PROGRESSION OF THE PROJECT. ALL CONTRACTOR OFF-SITE OPERATIONS ASSOCIATED WITH THE PROJECT MUST BE DOCUMENTED IN THE SWPPP, I.E., BORROW PITS, WORK ROADS, DISPOSAL SITES, ASPHALT/CONCRETE PLANTS, ETC. THE BASIC GOAL OF STORM WATER MANAGEMENT IS TO IMPROVE WATER QUALITY BY REDUCING POLLUTANTS IN STORM WATER DISCHARGES. RUNOFF FROM CONSTRUCTION SITES HAS A POTENTIAL FOR POLLUTION DUE TO EXPOSED SOILS AND THE PRESENCE OF HAZARDOUS MATERIALS USED IN THE CONSTRUCTION PROCESS. THE PREVENTION OF SOIL EROSION, CONTAINMENT OF HAZARDOUS MATERIALS AND/OR THE INTERCEPTION OF THESE POLLUTANTS BEFORE LEAVING THE CONSTRUCTION SITE ARE THE BEST PRACTICES FOR CONTROLLING STORM WATER POLLUTION.

THE FOLLOWING SECTIONS OF THE 2009 ODOT STANDARD SPECIFICATIONS SHOULD BE NOTED:

103.05 BONDING REQUIREMENTS
104.10 FINAL CLEANING UP
104.12 CONTRACTOR'S RESPONSIBILITY FOR WORK
104.13 ENVIRONMENTAL PROTECTION
106.08 STORAGE AND HANDLING OF MATERIAL
107.01 LAWS, RULES AND REGULATIONS TO BE OBSERVED
107.20 STORM WATER MANAGEMENT
220 MANAGEMENT OF EROSION, SEDIMENTATION AND STORM WATER POLLUTION PREVENTION AND CONTROL
221 TEMPORARY SEDIMENT CONTROL

IN ADDITION:
"ODEQ GENERAL PERMIT (OKR10) FOR STORM WATER DISCHARGES FROM CONSTRUCTION ACTIVITIES WITHIN THE STATE OF OKLAHOMA." ODEQ, WATER QUALITY DIVISION, SEPTEMBER 13, 2017.

BENJAMIN A. FLETCHER 24921 PROFESSIONAL ENGINEER OKLAHOMA
8/7/2020

STORM WATER MANAGEMENT PLAN
PROJECT #144628-W, TMUA-W 18-16
MAINTENANCE ZONE 6028-W
TUPELO CREEK DRAINAGE
CITY OF TULSA, OKLAHOMA
ENGINEERING SERVICES DEPARTMENT

PLANS AND ESTIMATES PREPARED BY:
Meshek & Associates, L.L.C.
1437 S. Boulder Avenue, Suite 1550 Tulsa, OK 74119 (918)392-5620

REVISION	BY	DATE

PLAN SCALE N/A	DRAWN	SCB	08/20
	DESIGNED	BWF	08/20
	SURVEY	AB	08/18
PROFILE SCALE	PROJ. MGR.		
HORIZONTAL: N/A	LEAD ENGR.		
	FIELD MGR.		
VERTICAL: N/A	RECOMMENDED DESIGN MANAGER		
FILE:	DRAWING:		
ATLAS PAGE NO. 235			

APPROVED:
CITY ENGINEER
DATE:
SHEET 47 OF 161 SHEETS

PRINT DATE: 08/07/2020 M:\City_of_Tulsa\18TUL02_MZ6028_Tupelo_Creek_Drainage\Design\Drawings\18TUL02_SP3.dwg

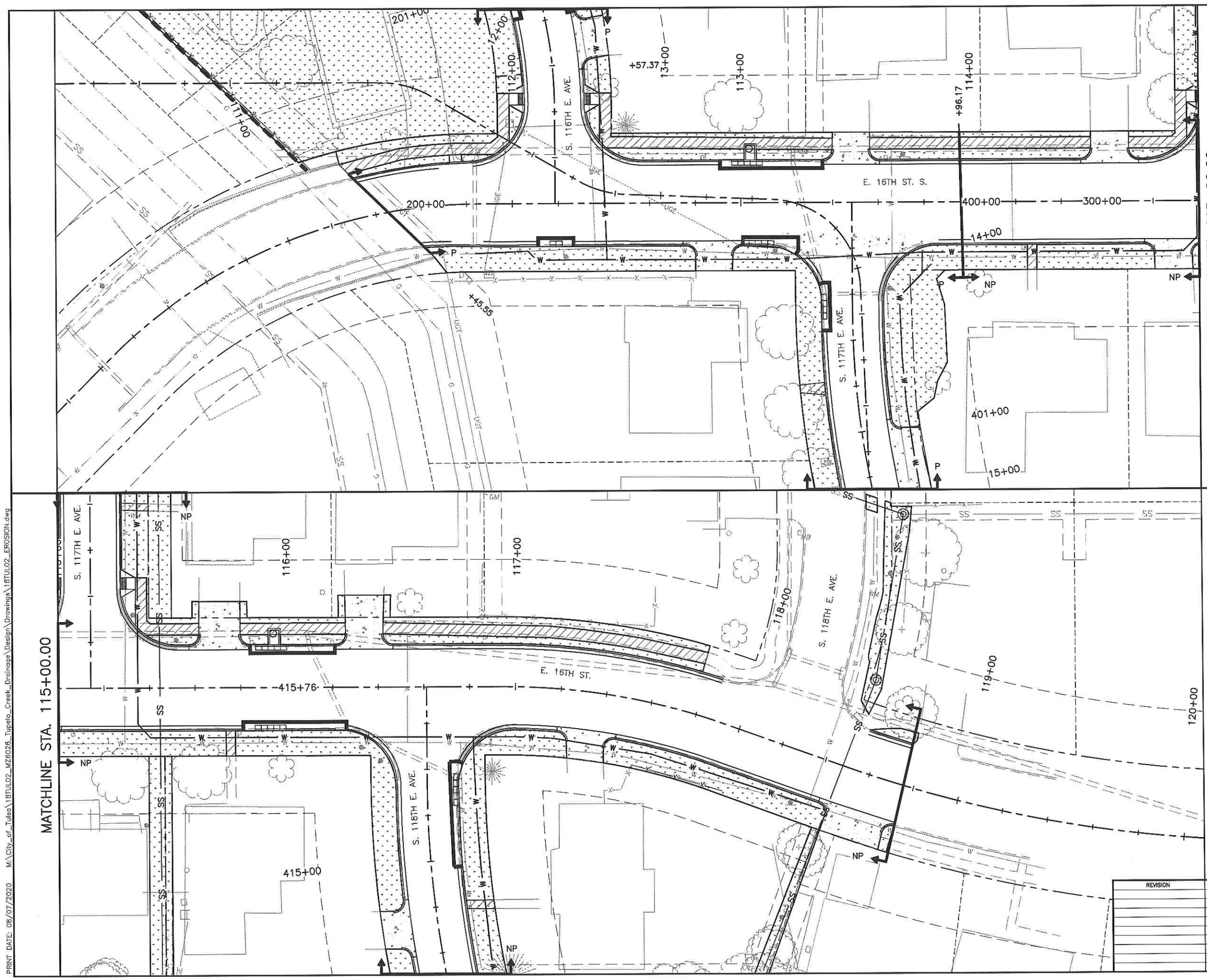

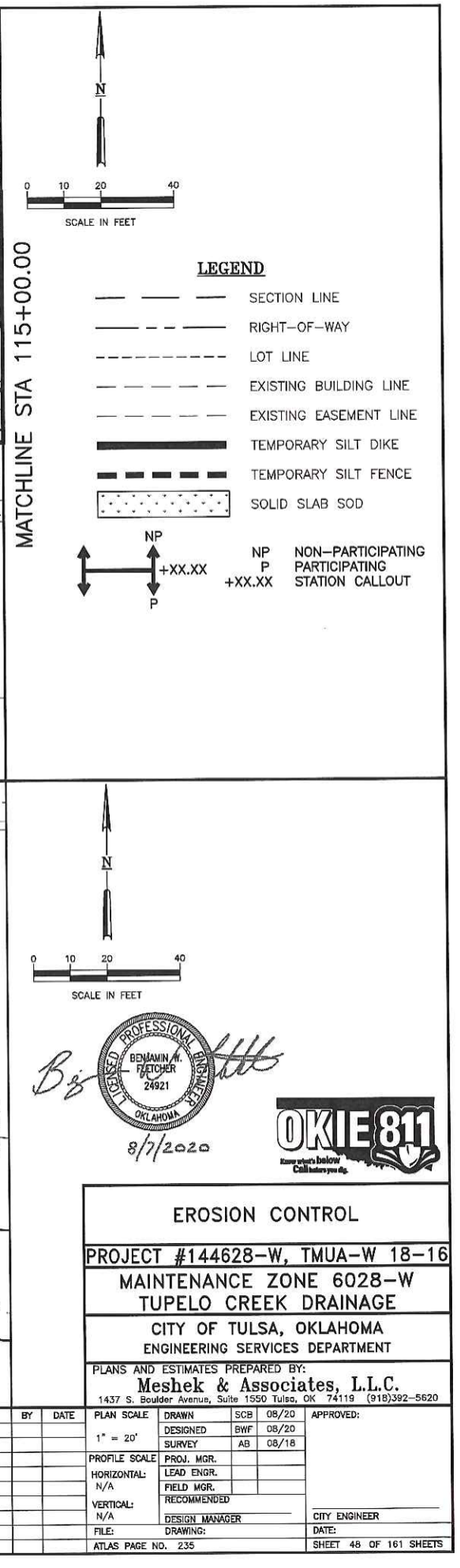

EROSION CONTROL

PROJECT #144628-W, TMUA-W 18-16

MAINTENANCE ZONE 6028-W
TUPELO CREEK DRAINAGE

CITY OF TULSA, OKLAHOMA
ENGINEERING SERVICES DEPARTMENT

PLANS AND ESTIMATES PREPARED BY:
Meshek & Associates, L.L.C.
1437 S. Boulder Avenue, Suite 1550 Tulsa, OK 74119 (918)392-5620

REVISION	BY	DATE

PLAN SCALE 1" = 20'	DRAWN	SCB	08/20
	DESIGNED	BWF	08/20
	SURVEY	AB	08/18
PROFILE SCALE	PROJ. MGR.		
HORIZONTAL: N/A	LEAD ENGR.		
	FIELD MGR.		
VERTICAL: N/A	RECOMMENDED		
	DESIGN MANAGER		
FILE:	DRAWING:		
ATLAS PAGE NO. 235			

APPROVED:

CITY ENGINEER

DATE:

SHEET 48 OF 161 SHEETS

PRINT DATE: 08/07/2020 M:\City_of_Tulsa\18TUL02_MZ6028_Tupelo_Creek_Drainage\Design\Drawings\18TUL02_EROSION.dwg

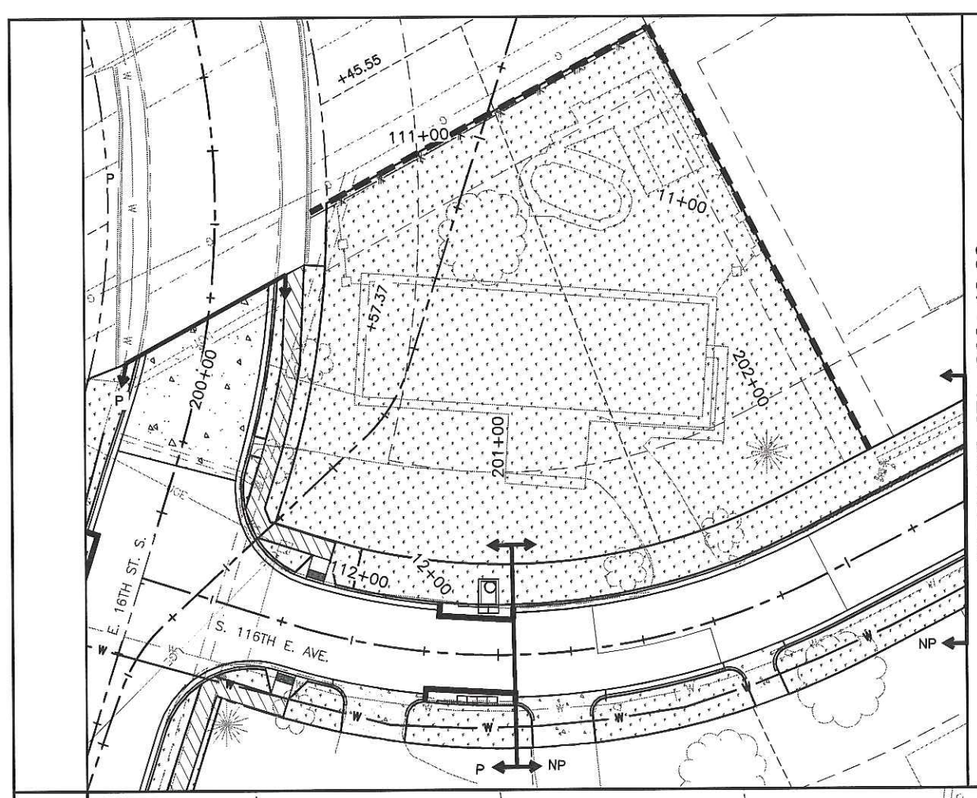

MATCHLINE STA. 202+40.00

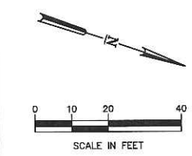

LEGEND

- SECTION LINE
- RIGHT-OF-WAY
- LOT LINE
- EXISTING BUILDING LINE
- EXISTING EASEMENT LINE
- TEMPORARY SILT DIKE
- TEMPORARY SILT FENCE
- SOLID SLAB SOD

NP
+XX.XX
P

NP NON-PARTICIPATING
P PARTICIPATING
+XX.XX STATION CALLOUT

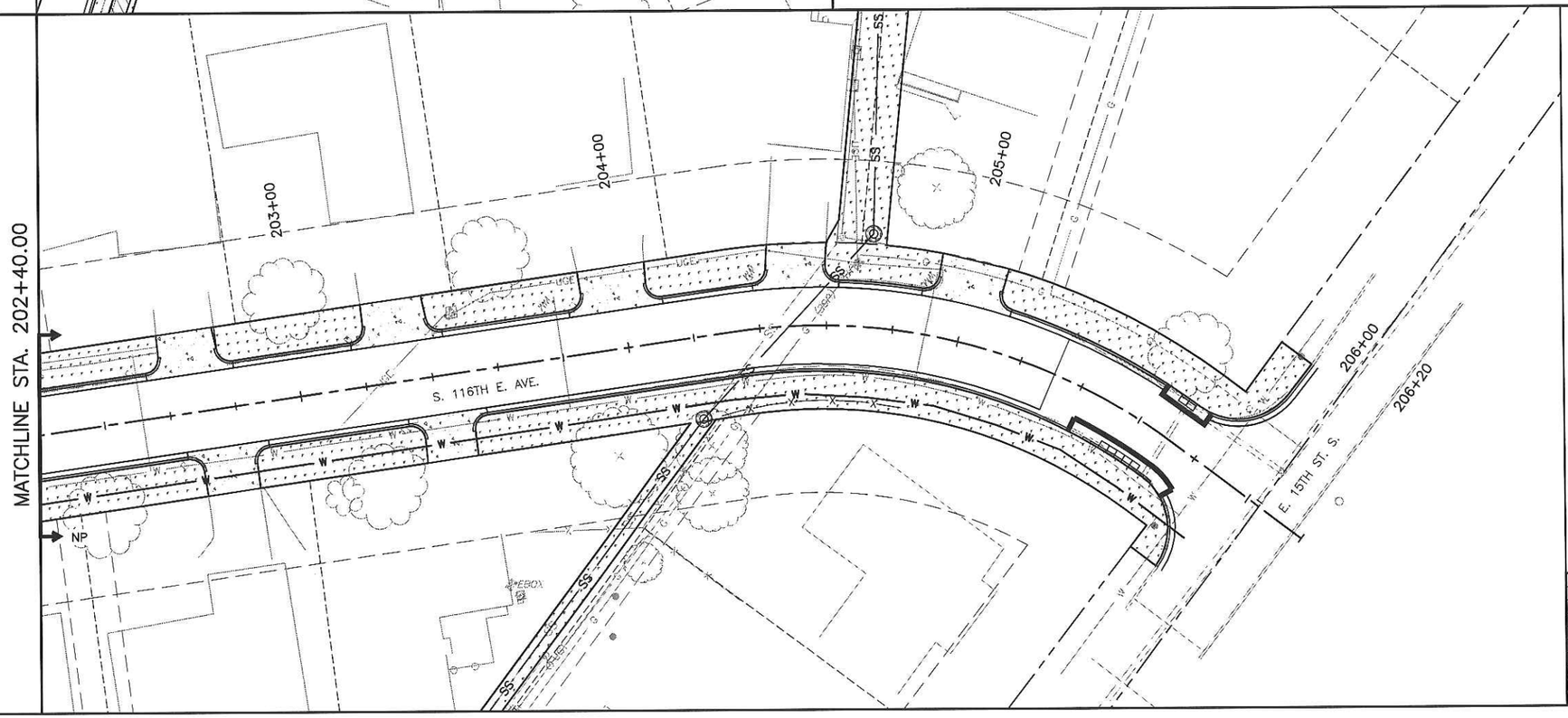

MATCHLINE STA. 202+40.00



LICENSED PROFESSIONAL ENGINEER
BENJAMIN W. FLETCHER
24921
OKLAHOMA

8/7/2020

OKIE 811
Know what's below
Call before you dig.

EROSION CONTROL

PROJECT #144628-W, TMUA-W 18-16

MAINTENANCE ZONE 6028-W
TUPELO CREEK DRAINAGE

CITY OF TULSA, OKLAHOMA
ENGINEERING SERVICES DEPARTMENT

PLANS AND ESTIMATES PREPARED BY:
Meshek & Associates, L.L.C.
1437 S. Boulder Avenue, Suite 1550 Tulsa, OK 74119 (918)392-5620

REVISION	BY	DATE

PLAN SCALE	DRAWN	SCB	08/20	APPROVED:
1" = 20'	DESIGNED	BWF	08/20	
	SURVEY	AB	08/18	
PROFILE SCALE	PROJ. MGR.			
HORIZONTAL: N/A	LEAD ENGR.			
	FIELD MGR.			
VERTICAL: N/A	RECOMMENDED DESIGN MANAGER			CITY ENGINEER
FILE:	DRAWING:			DATE:
ATLAS PAGE NO. 235				SHEET 49 OF 161 SHEETS

PRINT DATE: 08/07/2020 M:\City_of_Tulsa\18TUL02_MZ6028_Tupelo_Creek_Drainage\Design\Drawings\18TUL02_EROSION.dwg

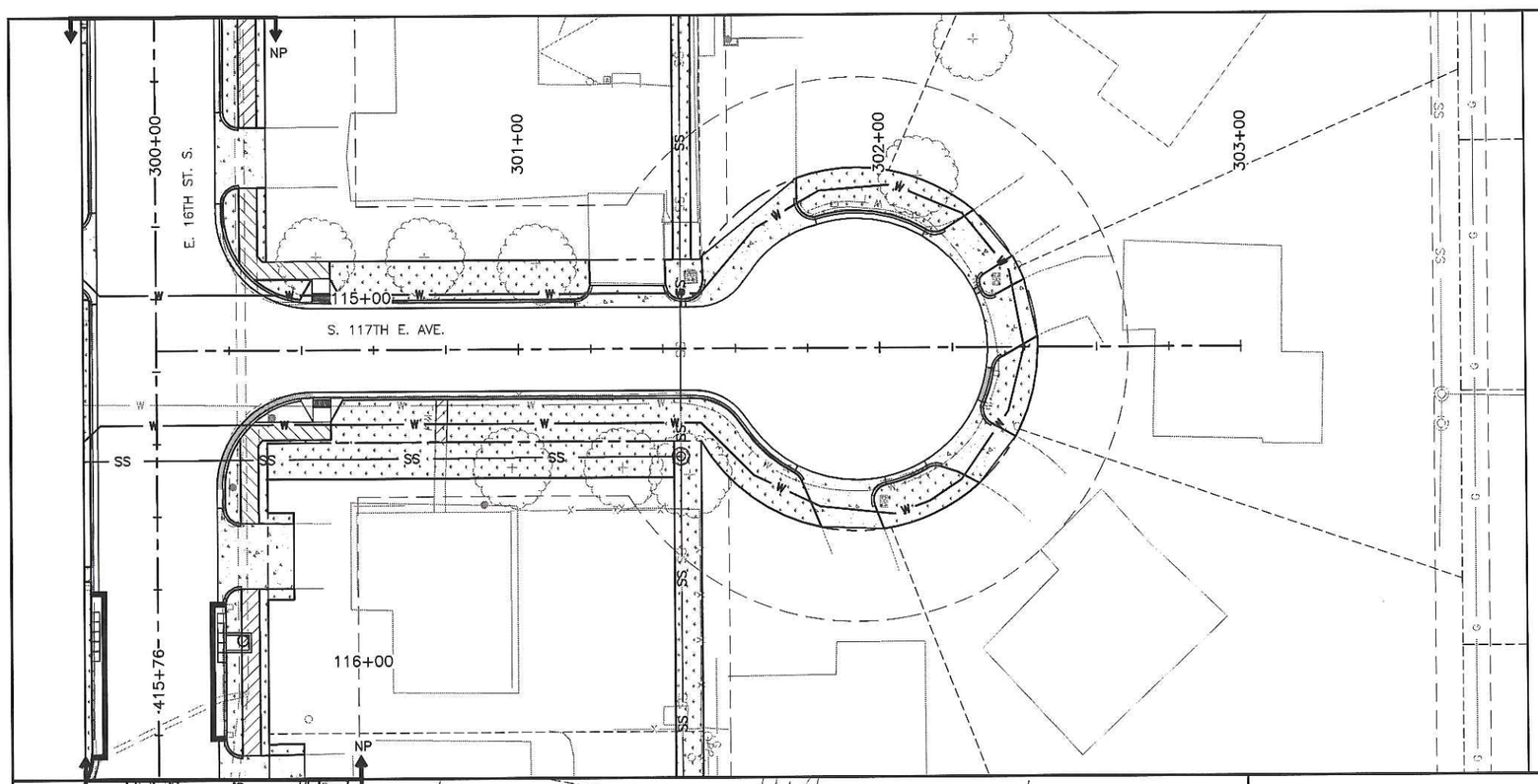

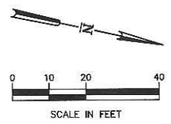

LEGEND

- SECTION LINE
- RIGHT-OF-WAY
- LOT LINE
- EXISTING BUILDING LINE
- EXISTING EASEMENT LINE
- TEMPORARY SILT DIKE
- TEMPORARY SILT FENCE
- SOLID SLAB SOD

NP
+XX.XX
P

NP NON-PARTICIPATING
P PARTICIPATING
+XX.XX STATION CALLOUT

PRINT DATE: 08/07/2020 M:\City_of_Tulsa\18TUL02_MZ6028_Tupelo_Creek_Drainage\Design\Drawings\18TUL02_EROSION.dwg

LICENSED PROFESSIONAL ENGINEER
BENJAMIN W. FLETCHER
24921
OKLAHOMA

8/7/2020

OKIE 811
Know what's below. Call before you dig.

EROSION CONTROL

PROJECT #144628-W, TMUA-W 18-16

MAINTENANCE ZONE 6028-W
TUPELO CREEK DRAINAGE

CITY OF TULSA, OKLAHOMA
ENGINEERING SERVICES DEPARTMENT

PLANS AND ESTIMATES PREPARED BY:
Meshek & Associates, L.L.C.
1437 S. Boulder Avenue, Suite 1550 Tulsa, OK 74119 (918)392-5620

REVISION	BY	DATE

PLAN SCALE 1" = 20'	DRAWN	SCB	08/20
	DESIGNED	BWF	08/20
	SURVEY	AB	08/18
PROFILE SCALE	PROJ. MGR.		
HORIZONTAL: N/A	LEAD ENGR.		
	FIELD MGR.		
VERTICAL: N/A	RECOMMENDED DESIGN MANAGER		
FILE:	DRAWING:		
ATLAS PAGE NO. 235			

APPROVED:

CITY ENGINEER

DATE:

SHEET 50 OF 161 SHEETS

SHEET 50
MATCHLINE STA. 403+00.00

MATCHLINE STA. 405+80.00

SHEET 52
MATCHLINE STA. 410+20.00

MATCHLINE STA. 405+80.00

S. 117TH E. AVE.

S. 118TH E. AVE.

E. 17TH PL. S.

17+00
18+00
404+00
405+00
406+00
407+00
408+00
409+00
410+00
+45.24

P
NP
W
UGE
SS
G

N

0 10 20 40
SCALE IN FEET

LEGEND

- SECTION LINE
- RIGHT-OF-WAY
- LOT LINE
- EXISTING BUILDING LINE
- EXISTING EASEMENT LINE
- TEMPORARY SILT DIKE
- TEMPORARY SILT FENCE
- SOLID SLAB SOD

NP
+XX.XX
P

NP NON-PARTICIPATING
P PARTICIPATING
+XX.XX STATION CALLOUT

LICENSED PROFESSIONAL ENGINEER
BENJAMIN W. FLETCHER
24921
OKLAHOMA

8/7/2020

OKIE 811
Know what's below. Call before you dig.

EROSION CONTROL

PROJECT #144628-W, TMUA-W 18-16

MAINTENANCE ZONE 6028-W
TUPELO CREEK DRAINAGE

CITY OF TULSA, OKLAHOMA
ENGINEERING SERVICES DEPARTMENT

PLANS AND ESTIMATES PREPARED BY:
Meshek & Associates, L.L.C.
1437 S. Boulder Avenue, Suite 1550 Tulsa, OK 74119 (918)392-5620

REVISION	BY	DATE

PLAN SCALE 1" = 20'	DRAWN	SCB	08/20
	DESIGNED	BWF	08/20
	SURVEY	AB	08/18
PROFILE SCALE	PROJ. MGR.		
HORIZONTAL: N/A	LEAD ENGR.		
	FIELD MGR.		
VERTICAL: N/A	RECOMMENDED DESIGN MANAGER		
FILE:	DRAWING:		
ATLAS PAGE NO. 235			

APPROVED:

CITY ENGINEER

DATE:

SHEET 51 OF 161 SHEETS

PRINT DATE: 08/07/2020 M:\City_of_Tulsa\18TUL02_WZ6028_Tupelo_Creek_Drainage\Design\Drawings\18TUL02_EROSION.dwg

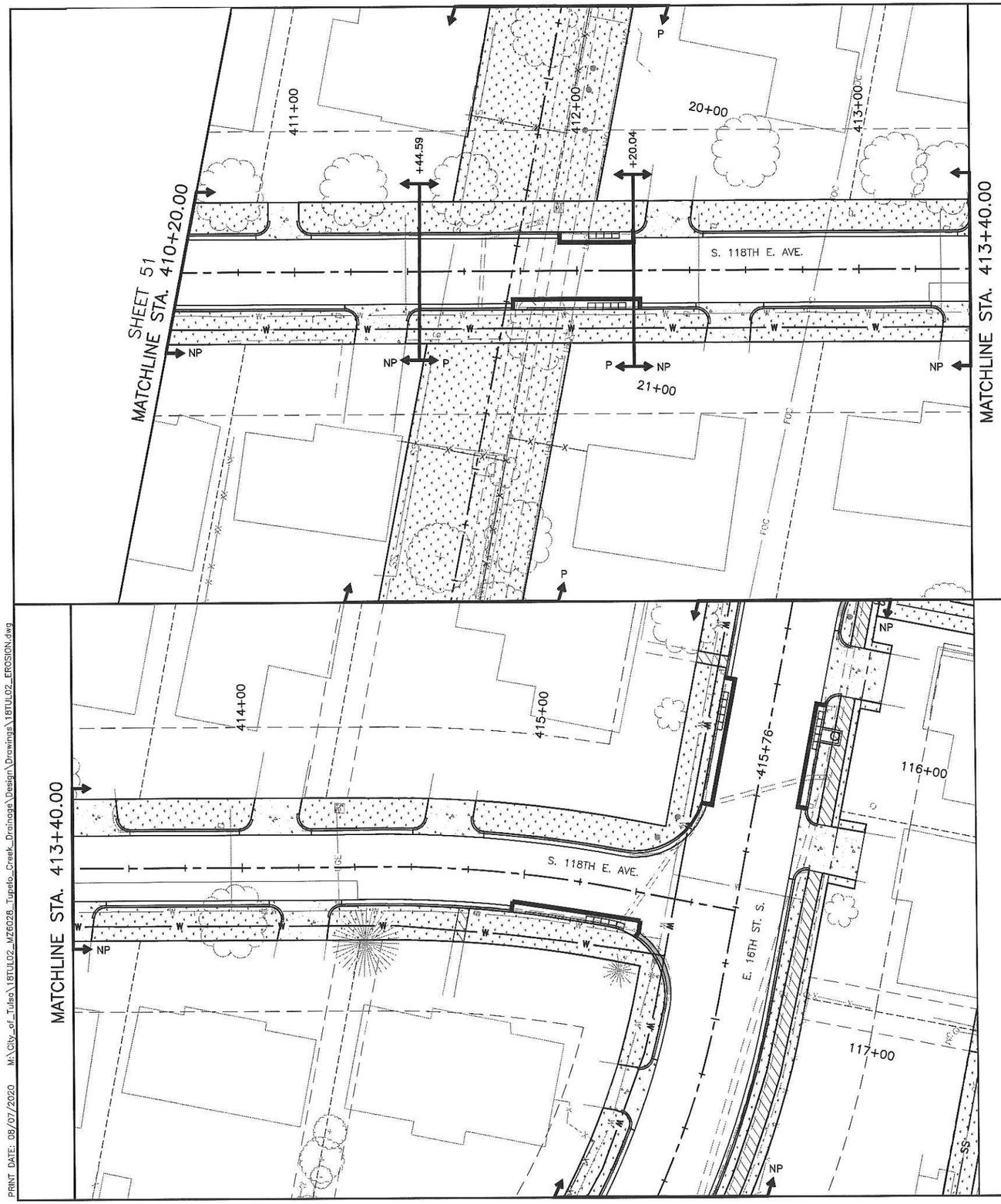

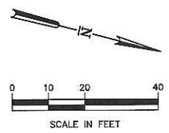

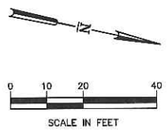

LEGEND

- SECTION LINE
- RIGHT–OF–WAY
- LOT LINE
- EXISTING BUILDING LINE
- EXISTING EASEMENT LINE
- TEMPORARY SILT DIKE
- TEMPORARY SILT FENCE
- SOLID SLAB SOD

NP
+XX.XX
P

NP NON–PARTICIPATING
P PARTICIPATING
+XX.XX STATION CALLOUT

LICENSED PROFESSIONAL ENGINEER
BENJAMIN W. FLETCHER
24921
OKLAHOMA

8/7/2020

OKIE 811
Know what's below. Call before you dig.

EROSION CONTROL

PROJECT #144628–W, TMUA–W 18–16

MAINTENANCE ZONE 6028–W
TUPELO CREEK DRAINAGE

CITY OF TULSA, OKLAHOMA
ENGINEERING SERVICES DEPARTMENT

PLANS AND ESTIMATES PREPARED BY:
Meshek & Associates, L.L.C.
1437 S. Boulder Avenue, Suite 1550 Tulsa, OK 74119 (918)392–5620

REVISION	BY	DATE

PLAN SCALE	DRAWN	SCB	08/20	APPROVED:
1" = 20'	DESIGNED	BWF	08/20	
	SURVEY	AB	08/18	
PROFILE SCALE	PROJ. MGR.			
HORIZONTAL: N/A	LEAD ENGR.			
	FIELD MGR.			
VERTICAL: N/A	RECOMMENDED			
	DESIGN MANAGER			CITY ENGINEER
FILE:	DRAWING:			DATE:
ATLAS PAGE NO. 235				SHEET 52 OF 161 SHEETS

PRINT DATE: 08/07/2020 M:\City_of_Tulsa\16TUL02_MZ6028_Tupelo_Creek_Drainage\Design\Drawings\16TUL02_EROSION.dwg

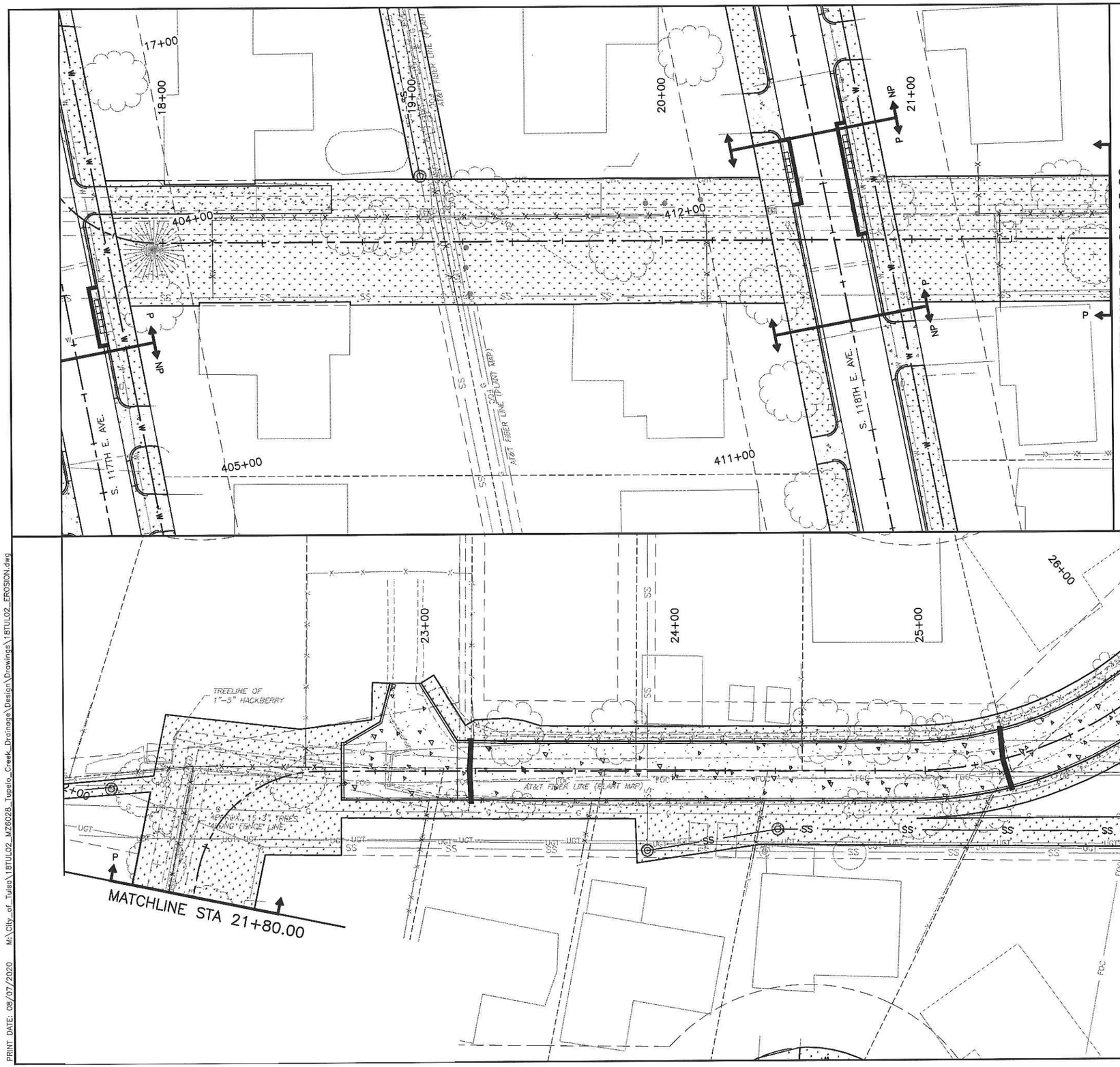

N

0 10 20 40

SCALE IN FEET

LEGEND

- SECTION LINE
- RIGHT-OF-WAY
- LOT LINE
- EXISTING BUILDING LINE
- EXISTING EASEMENT LINE
- TEMPORARY SILT DIKE
- TEMPORARY SILT FENCE
- SOLID SLAB SOD

NP
+XX.XX
P

NP NON-PARTICIPATING
P PARTICIPATING
+XX.XX STATION CALLOUT

SHEET 54
MATCHLINE STA. 26+80.00

N

0 10 20 40

SCALE IN FEET

LICENSED PROFESSIONAL ENGINEER
BENJAMIN W. FLETCHER
24921
OKLAHOMA

8/7/2020

OKIE 811
Know what's below. Call before you dig.

EROSION CONTROL

PROJECT #144628-W, TMUA-W 18-16

MAINTENANCE ZONE 6028-W
TUPELO CREEK DRAINAGE

CITY OF TULSA, OKLAHOMA
ENGINEERING SERVICES DEPARTMENT

PLANS AND ESTIMATES PREPARED BY:
Meshek & Associates, L.L.C.
1437 S. Boulder Avenue, Suite 1550 Tulsa, OK 74119 (918)392-5620

REVISION	BY	DATE

PLAN SCALE	DRAWN	SCB	08/20
1" = 20'	DESIGNED	BWF	08/20
	SURVEY	AB	08/18
PROFILE SCALE	PROJ. MGR.		
HORIZONTAL: N/A	LEAD ENGR.		
	FIELD MGR.		
VERTICAL: N/A	RECOMMENDED		
	DESIGN MANAGER		
FILE:	DRAWING:		
ATLAS PAGE NO. 235			

APPROVED:

CITY ENGINEER

DATE:

SHEET 53 OF 161 SHEETS

PRINT DATE: 08/07/2020 M:\City_of_Tulsa\18TUL02_MZ6028_Tupelo_Creek_Drainage\Design\Drawings\18TUL02_EROSION.dwg

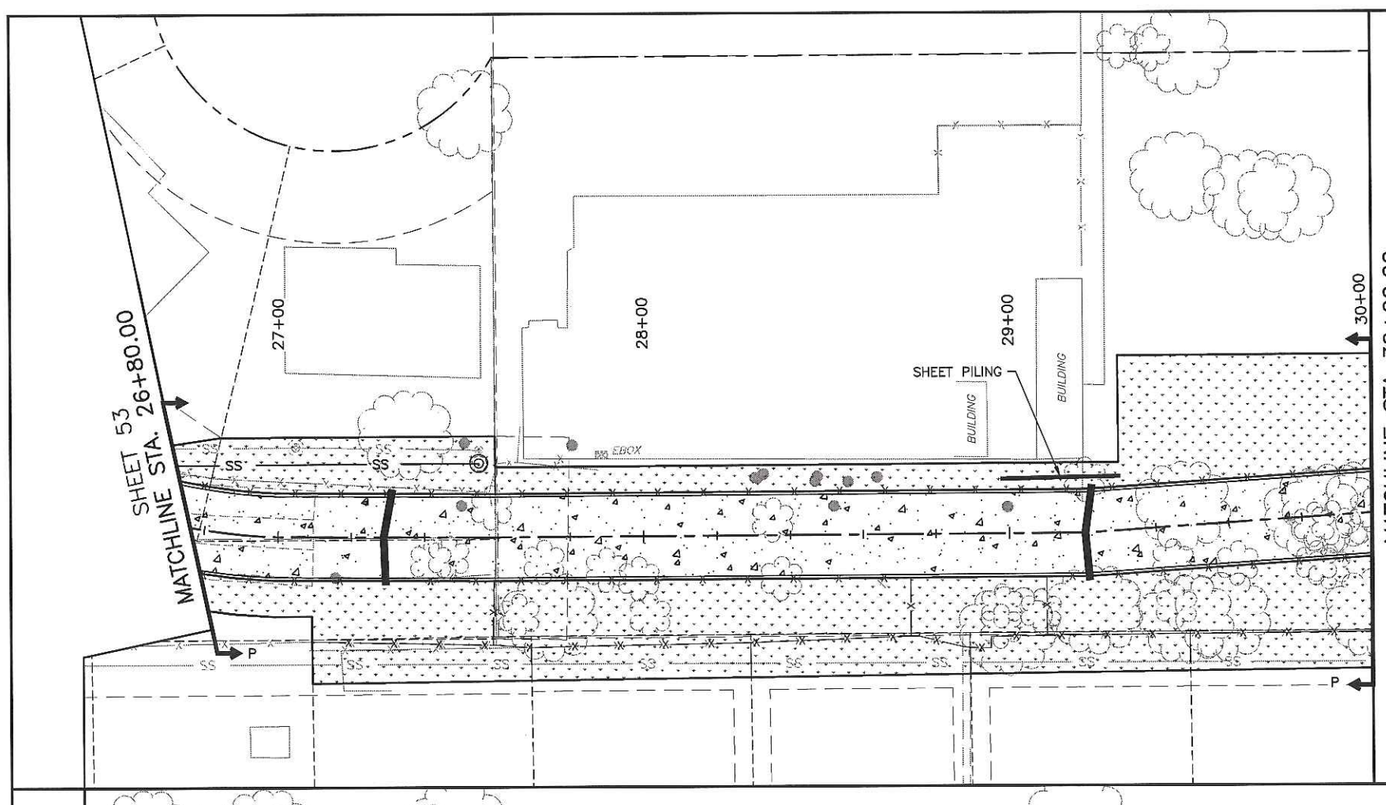

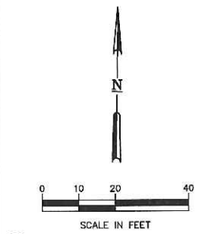

LEGEND

- SECTION LINE
- RIGHT-OF-WAY
- LOT LINE
- EXISTING BUILDING LINE
- EXISTING EASEMENT LINE
- TEMPORARY SILT DIKE
- TEMPORARY SILT FENCE
- SOLID SLAB SOD

NP
+XX.XX
P

NP NON-PARTICIPATING
P PARTICIPATING
+XX.XX STATION CALLOUT

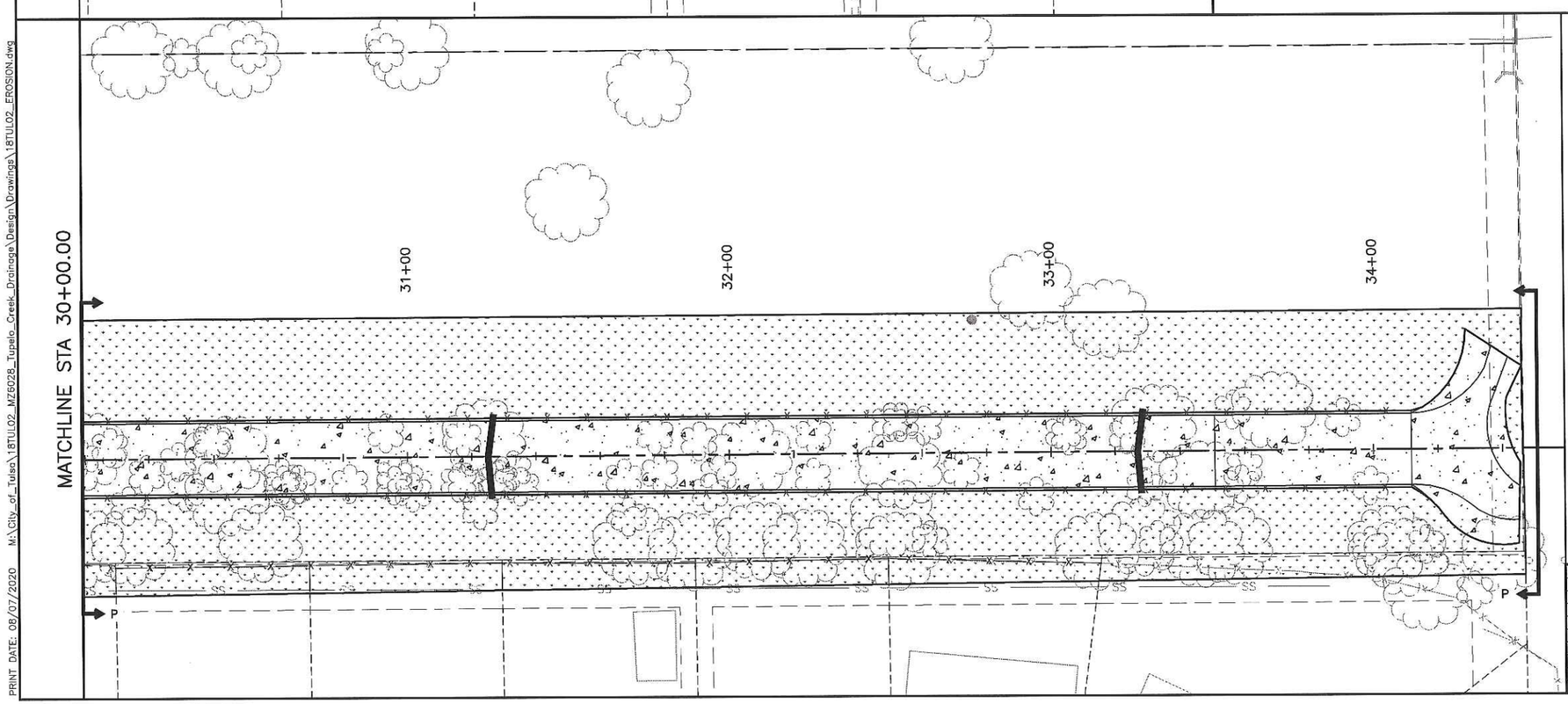

REGISTERED PROFESSIONAL ENGINEER
BENJAMIN W. FLETCHER
24921
OKLAHOMA

8/7/2020

OKIE 811

EROSION CONTROL

PROJECT #144628-W, TMUA-W 18-16

MAINTENANCE ZONE 6028-W
TUPELO CREEK DRAINAGE

CITY OF TULSA, OKLAHOMA
ENGINEERING SERVICES DEPARTMENT

PLANS AND ESTIMATES PREPARED BY:
Meshek & Associates, L.L.C.
1437 S. Boulder Avenue, Suite 1550 Tulsa, OK 74119 (918)392-5620

REVISION	BY	DATE

PLAN SCALE 1" = 20'	DRAWN	SCB	08/20
	DESIGNED	BWF	08/20
	SURVEY	AB	08/18
PROFILE SCALE	PROJ. MGR.		
HORIZONTAL: N/A	LEAD ENGR.		
	FIELD MGR.		
VERTICAL: N/A	RECOMMENDED DESIGN MANAGER		
FILE:	DRAWING:		
ATLAS PAGE NO. 235			

APPROVED:

CITY ENGINEER

DATE:

SHEET 54 OF 161 SHEETS

PRINT DATE: 08/07/2020 M:\City_of_Tulsa\18TUL02_MZ6028_Tupelo_Creek_Drainage\Design\Drawings\18TUL02_EROSION.dwg

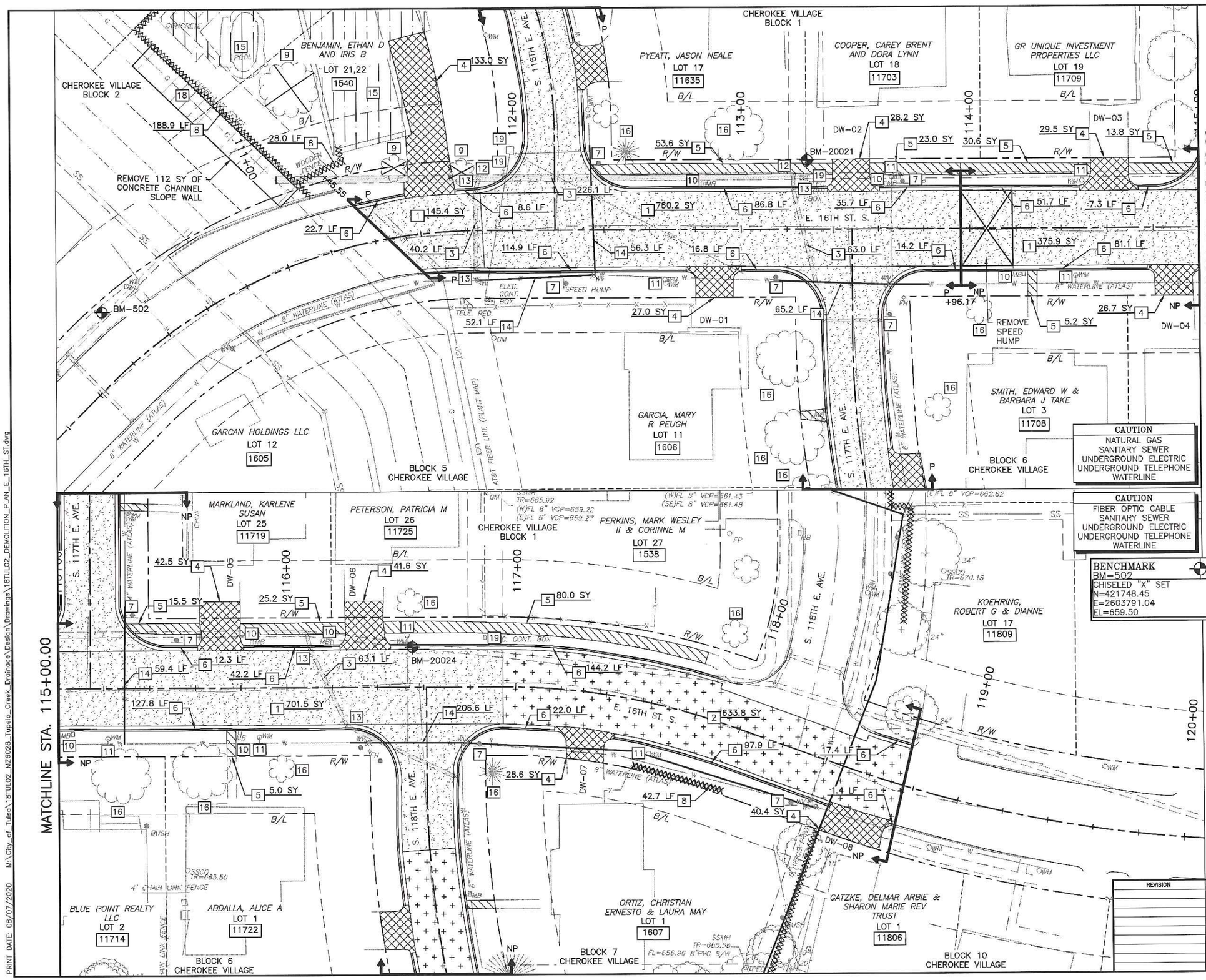

SCALE IN FEET

NP NON-PARTICIPATING
P PARTICIPATING
+XX.XX STATION CALLOUT

CONSTRUCTION NOTES:

1. PAVEMENT REMOVAL
2. 2" MILL
3. STORM PIPE REMOVAL
4. DRIVEWAY REMOVAL
5. SIDEWALK REMOVAL
6. CURB & GUTTER REMOVAL
7. REMOVE & REPLACE STREET SIGN
8. FENCE REMOVAL
9. REMOVE TREE
10. REMOVE & RESET MAILBOX
11. REMOVE & RESET WATER METER
12. REMOVE MANHOLE
13. REMOVE INLET
14. REMOVE WATERLINE/SEWER LINE
15. STRUCTURE TO BE REMOVED BY OTHERS
16. TO BE PROTECTED
17. TO BE FILLED WITH CELL FILL CONCRETE OR APPROVED EQUAL
18. REMOVE CONCRETE CHANNEL
19. TO BE RELOCATED BY OTHERS
20. REMOVE EXISTING PVMT FOR PATCHING

BENCHMARK BM-502	BENCHMARK BM-20021	BENCHMARK BM-20024
CHISELED "X" SET	CHISELED "X" SET	CHISELED "X" SET
N=421748.45	N=421819.77	N=421813.68
E=2603791.04	E=2604098.25	E=2604424.73
EL=659.50	EL=660.44	EL=662.42

LICENSED PROFESSIONAL ENGINEER BENJAMIN W. FLETCHER 24921 OKLAHOMA

8/7/2020

OKIE 811 Know what's below Call before you dig.

DEMOLITION PLAN
E. 16TH ST. S.

PROJECT #144628-W, TMUA-W 18-16

MAINTENANCE ZONE 6028-W
TUPELO CREEK DRAINAGE

CITY OF TULSA, OKLAHOMA
ENGINEERING SERVICES DEPARTMENT

PLANS AND ESTIMATES PREPARED BY:
Meshek & Associates, L.L.C.
1437 S. Boulder Avenue, Suite 1550 Tulsa, OK 74119 (918)392-5620

REVISION	BY	DATE

PLAN SCALE				APPROVED:
1" = 20'	DRAWN	SCB	08/20	
	DESIGNED	BWF	08/20	
	SURVEY	AB	08/18	
PROFILE SCALE	PROJ. MGR.			
HORIZONTAL: N/A	LEAD ENGR.			
	FIELD MGR.			
VERTICAL: N/A	RECOMMENDED			
	DESIGN MANAGER			CITY ENGINEER
FILE:	DRAWING:			DATE:
ATLAS PAGE NO. 235				SHEET 55 OF 161 SHEETS

PRINT DATE: 08/07/2020 M:\City_of_Tulsa\18TUL02_MZ6028_Tupelo_Creek_Drainage\Design\Drawings\18TUL02_DEMOLITION_PLAN_E_16TH_ST.dwg

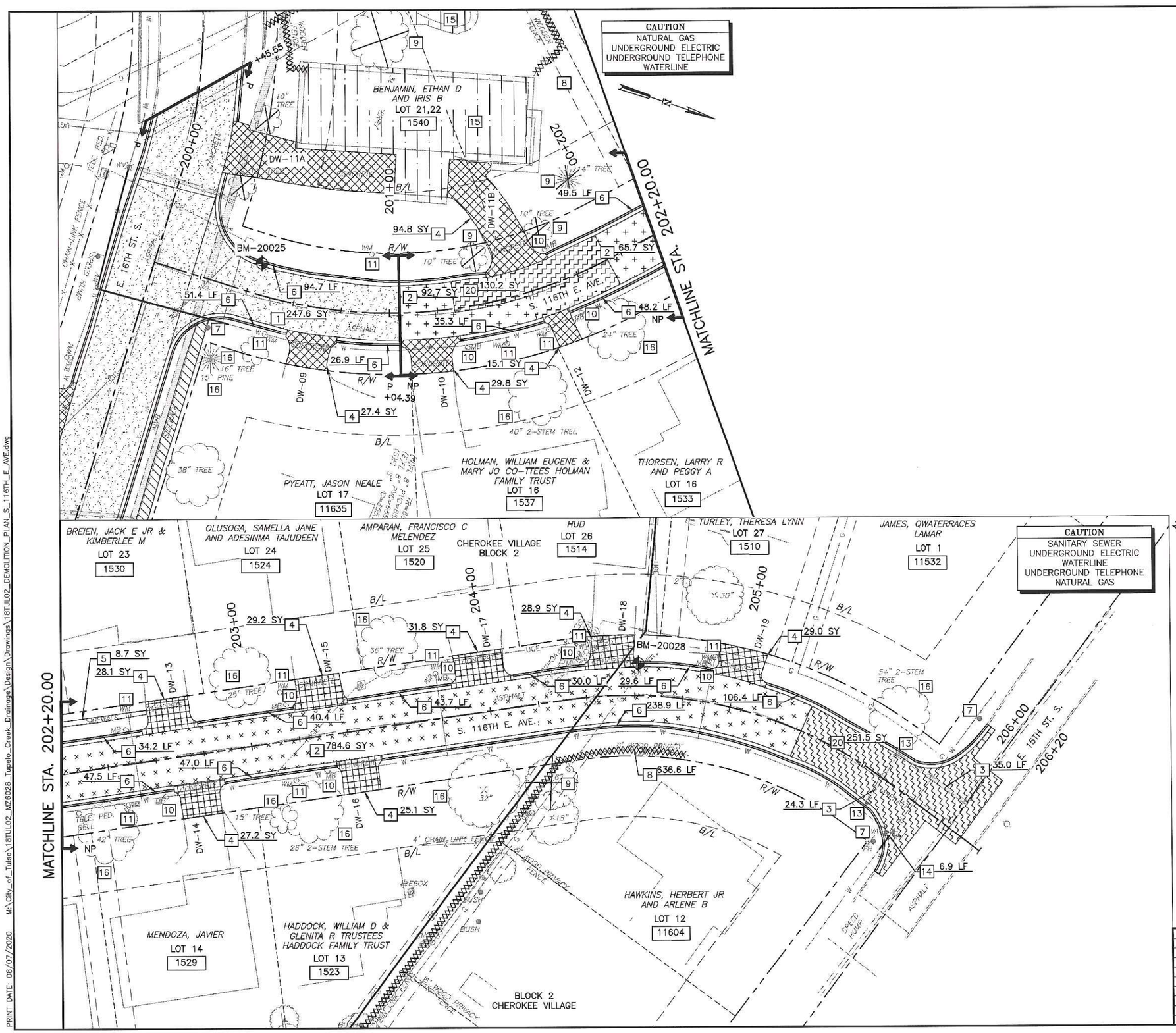

0 10 20 40
SCALE IN FEET

NP
+XX.XX
P

NP NON-PARTICIPATING
P PARTICIPATING
+XX.XX STATION CALLOUT

CONSTRUCTION NOTES:

1. PAVEMENT REMOVAL
2. 2" MILL
3. STORM PIPE REMOVAL
4. DRIVEWAY REMOVAL
5. SIDEWALK REMOVAL
6. CURB & GUTTER REMOVAL
7. REMOVE & REPLACE STREET SIGN
8. FENCE REMOVAL
9. REMOVE TREE
10. REMOVE & RESET MAILBOX
11. REMOVE & RESET WATER METER
12. REMOVE MANHOLE
13. REMOVE INLET
14. REMOVE WATERLINE/SEWER LINE
15. STRUCTURE TO BE REMOVED BY OTHERS
16. TO BE PROTECTED
17. TO BE FILLED WITH CELL FILL CONCRETE OR APPROVED EQUAL
18. REMOVE CONCRETE CHANNEL
19. TO BE RELOCATED BY OTHERS
20. REMOVE EXISTING PVMT FOR PATCHING

BENCHMARK
BM-20025
CHISELED "X" SET
N=421830.06
E=2603975.10
EL=658.98

BENCHMARK
BM-20028
CHISELED "X" SET
N=422144.53
E=2603727.05
EL=656.82

LICENSED PROFESSIONAL ENGINEER
BENJAMIN M. FLETCHER
24921
OKLAHOMA
8/7/2020

OKIE 811
Know what's below. Call before you dig.

DEMOLITION PLAN
S. 116TH E. AVE.

PROJECT #144628-W, TMUA-W 18-16

MAINTENANCE ZONE 6028-W
TUPELO CREEK DRAINAGE

CITY OF TULSA, OKLAHOMA
ENGINEERING SERVICES DEPARTMENT

PLANS AND ESTIMATES PREPARED BY:
Meshek & Associates, L.L.C.
1437 S. Boulder Avenue, Suite 1550 Tulsa, OK 74119 (918)392-5620

REVISION	BY	DATE

PLAN SCALE	DRAWN	SCB	08/20
1" = 20'	DESIGNED	BWF	08/20
	SURVEY	AB	08/18
PROFILE SCALE	PROJ. MGR.		
HORIZONTAL: N/A	LEAD ENGR.		
	FIELD MGR.		
VERTICAL: N/A	RECOMMENDED DESIGN MANAGER		
FILE:	DRAWING:		
ATLAS PAGE NO. 235			

APPROVED:
CITY ENGINEER
DATE:
SHEET 56 OF 161 SHEETS

PRINT DATE: 08/07/2020 M:\City_of_Tulsa\18TUL02_MZ6028_Tupelo_Creek_Drainage\Design\Drawings\18TUL02_DEMOLITION_PLAN_S_116TH_E_AVE.dwg

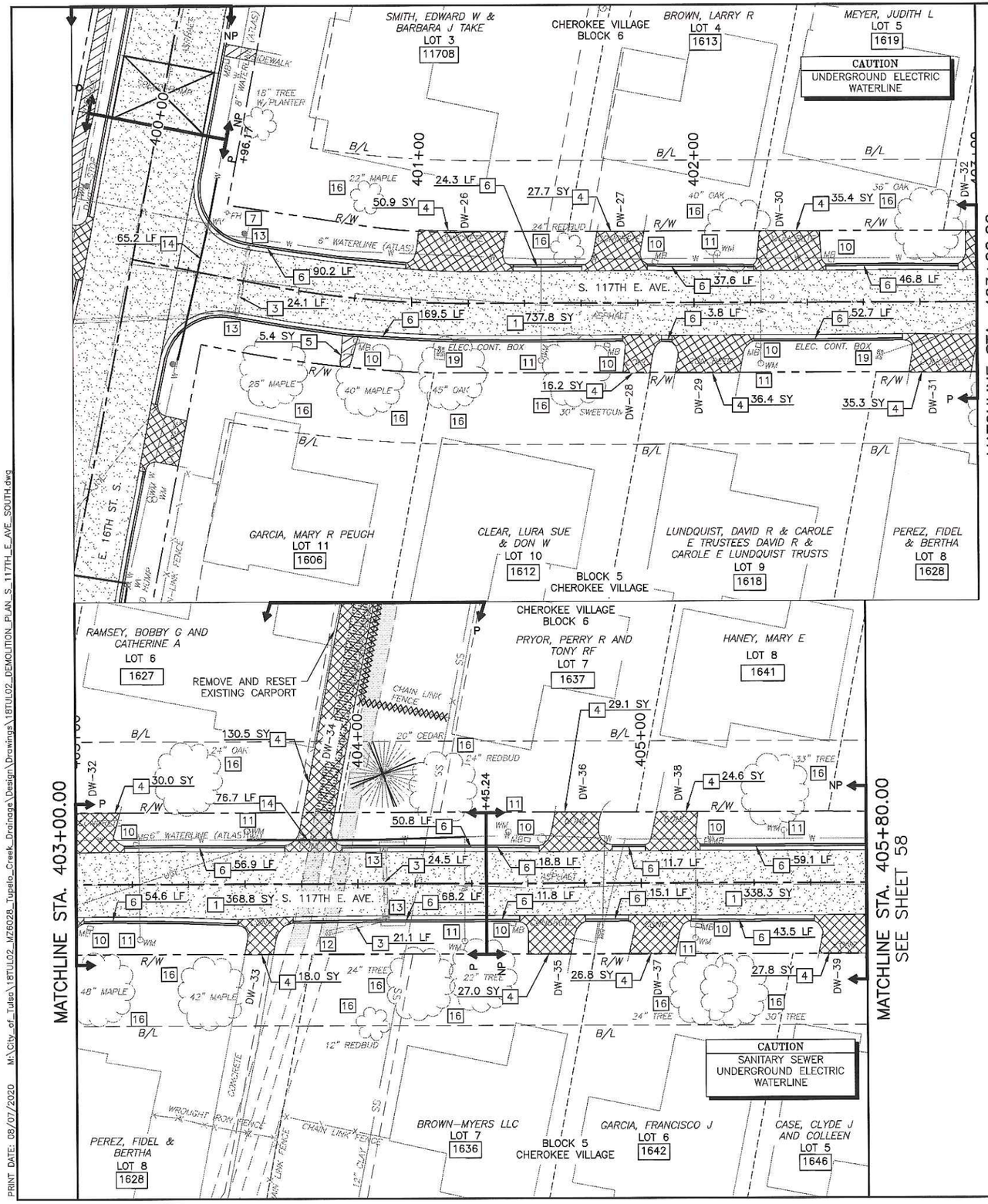

0 10 20 40
SCALE IN FEET

NP +XX.XX
P +XX.XX

NP NON-PARTICIPATING
P PARTICIPATING
+XX.XX STATION CALLOUT

CONSTRUCTION NOTES:

1. PAVEMENT REMOVAL
2. 2" MILL
3. STORM PIPE REMOVAL
4. DRIVEWAY REMOVAL
5. SIDEWALK REMOVAL
6. CURB & GUTTER REMOVAL
7. REMOVE & REPLACE STREET SIGN
8. FENCE REMOVAL
9. REMOVE TREE
10. REMOVE & RESET MAILBOX
11. REMOVE & RESET WATER METER
12. REMOVE MANHOLE
13. REMOVE INLET
14. REMOVE WATERLINE/SEWER LINE
15. STRUCTURE TO BE REMOVED BY OTHERS
16. TO BE PROTECTED
17. TO BE FILLED WITH CELL FILL CONCRETE OR APPROVED EQUAL
18. REMOVE CONCRETE CHANNEL
19. TO BE RELOCATED BY OTHERS
20. REMOVE EXISTING PVMT FOR PATCHING

BENCHMARK
BM-20021
CHISELED "X" SET
N=421819.77
E=2604098.25
EL=660.44

BENJAMIN W. FLETCHER 24921 LICENSED PROFESSIONAL ENGINEER OKLAHOMA
8/7/2020

OKIE 811 Know what's below Call before you dig.

DEMOLITION PLAN
S. 117TH E. AVE.

PROJECT #144628-W, TMUA-W 18-16

MAINTENANCE ZONE 6028-W
TUPELO CREEK DRAINAGE

CITY OF TULSA, OKLAHOMA
ENGINEERING SERVICES DEPARTMENT

PLANS AND ESTIMATES PREPARED BY:
Meshek & Associates, L.L.C.
1437 S. Boulder Avenue, Suite 1550 Tulsa, OK 74119 (918)392-5620

REVISION	BY	DATE

PLAN SCALE	DRAWN	SCB	08/20
1" = 20'	DESIGNED	BWF	08/20
	SURVEY	AB	08/18
PROFILE SCALE	PROJ. MGR.		
HORIZONTAL: N/A	LEAD ENGR.		
	FIELD MGR.		
VERTICAL: N/A	RECOMMENDED DESIGN MANAGER		
FILE:	DRAWING:		
ATLAS PAGE NO. 235			

APPROVED:
CITY ENGINEER
DATE:
SHEET 57 OF 161 SHEETS

PRINT DATE: 08/07/2020 M:\City_of_Tulsa\18TUL02_MZ6028_Tupelo_Creek_Drainage\Design\Drawings\18TUL02_DEMOLITION_PLAN_S_117TH_E_AVE_SOUTH.dwg

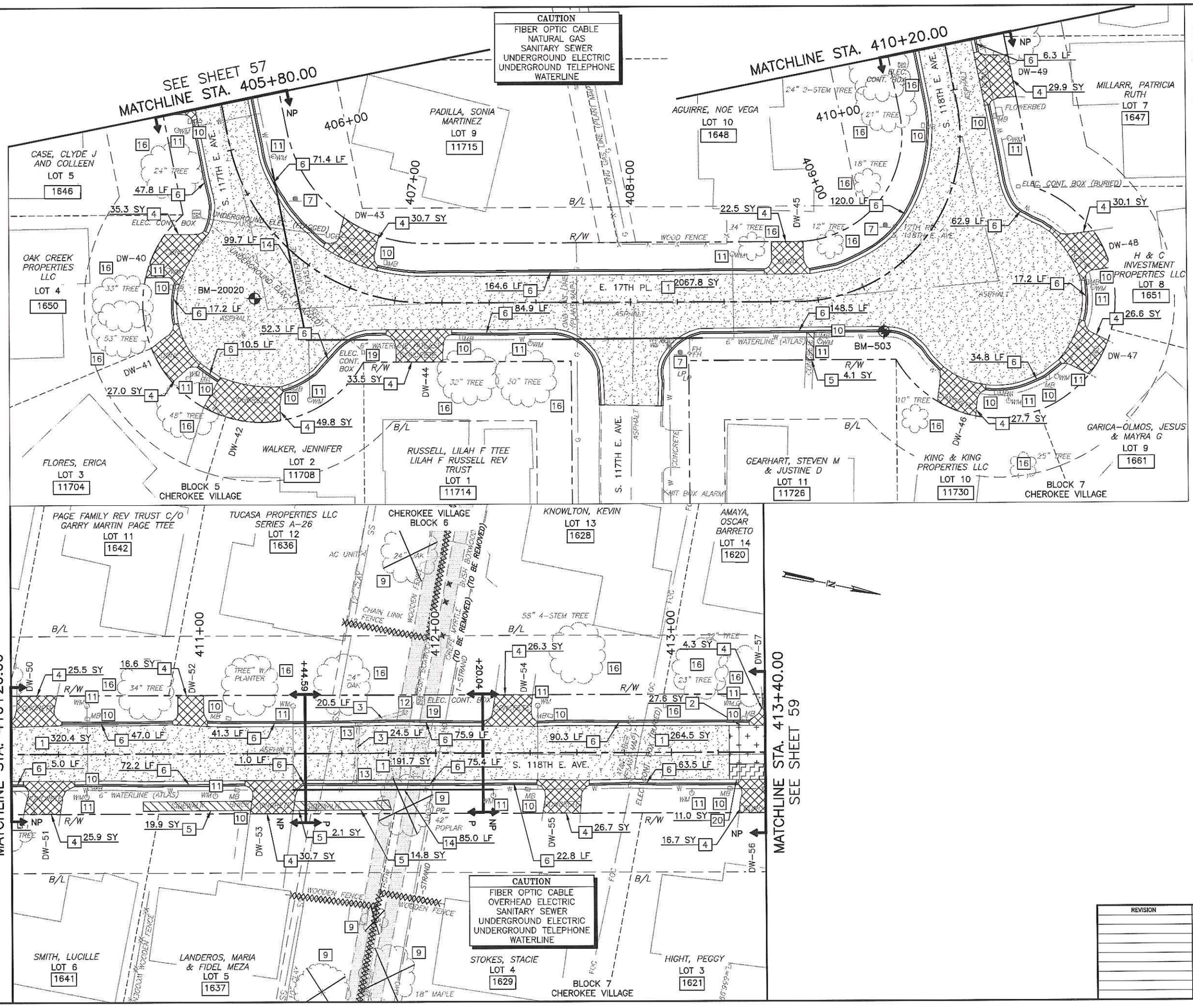

CONSTRUCTION NOTES:

1. PAVEMENT REMOVAL
2. 2" MILL
3. STORM PIPE REMOVAL
4. DRIVEWAY REMOVAL
5. SIDEWALK REMOVAL
6. CURB & GUTTER REMOVAL
7. REMOVE & REPLACE STREET SIGN
8. FENCE REMOVAL
9. REMOVE TREE
10. REMOVE & RESET MAILBOX
11. REMOVE & RESET WATER METER
12. REMOVE MANHOLE
13. REMOVE INLET
14. REMOVE WATERLINE/SEWER LINE
15. STRUCTURE TO BE REMOVED BY OTHERS
16. TO BE PROTECTED
17. TO BE FILLED WITH CELL FILL CONCRETE OR APPROVED EQUAL
18. REMOVE CONCRETE CHANNEL
19. TO BE RELOCATED BY OTHERS
20. REMOVE EXISTING PVMT FOR PATCHING

LICENSED PROFESSIONAL ENGINEER BENJAMIN W. FLETCHER 24921 OKLAHOMA

8/7/2020

OKIE 811 Know what's below. Call before you dig.

DEMOLITION PLAN
S. 117TH E. AVE.

PROJECT #144628-W, TMUA-W 18-16

MAINTENANCE ZONE 6028-W
TUPELO CREEK DRAINAGE

CITY OF TULSA, OKLAHOMA
ENGINEERING SERVICES DEPARTMENT

PLANS AND ESTIMATES PREPARED BY:
Meshek & Associates, L.L.C.
1437 S. Boulder Avenue, Suite 1550 Tulsa, OK 74119 (918)392-5620

REVISION	BY	DATE

PLAN SCALE 1" = 20'	DRAWN	SCB	08/20
	DESIGNED	BWF	08/20
	SURVEY	AB	08/18
PROFILE SCALE HORIZONTAL: N/A VERTICAL: N/A	PROJ. MGR.		
	LEAD ENGR.		
	FIELD MGR.		
	RECOMMENDED DESIGN MANAGER		
FILE:	DRAWING:		

APPROVED:
CITY ENGINEER
DATE:
ATLAS PAGE NO. 235
SHEET 58 OF 161 SHEETS

PRINT DATE: 08/07/2020 W:\City_of_Tulsa\18TUL02_MZ6028_Tupelo_Creek_Drainage\Design\Drawings\18TUL02_DEMOLITION_PLAN_S_117TH_E_AVE_SOUTH.dwg

SEE SHEET 58
MATCHLINE STA. 413+40.00

AMAYA, OSCAR BARRETO
LOT 14
1620

EVANS, DARRELL LEE
LOT 15
1614

CHEROKEE VILLAGE
BLOCK 6

ABDALLA, ALICE A
LOT 1
11722

414+00

415+00

415+76

S. 118TH E. AVE.

E. 16TH ST. S.

BM-20024

JRT ASSETS LLC
LOT 2
1615

BLOCK 7
CHEROKEE VILLAGE

ORTIZ, CHRISTIAN ERNESTO & LAURA MAY
LOT 1
1607

GR UNIQUE INVESTMENT PROPERTIES LLC
LOT 19
11709

CHEROKEE VILLAGE
BLOCK 1

MEDRANO, ELVIN OMAR OLIVA & LESBY YORLENY RAMIREZ PERDOMO
LOT 20
1516

DIAZ, ALFREDO GARCIA
LOT 21
1510

300+00

301+00

302+00

303+00

S. 117TH E. AVE.

E. 16TH ST. S.

BM-20023

HARRIS, LEWANA M
LOT 22
1505

MARKLAND, KARLENE SUSAN
LOT 25
11719

POWERS, RAYMOND DEMPSEY REVOCABLE TRUST
LOT 24
1515

POWERS, RAYMOND DEMPSEY REVOCABLE TRUST
LOT 23
1509

BLOCK 1
CHEROKEE VILLAGE

DW-56 | 4 | 12.0 SY
DW-57 | 4 | 22.4 SY
DW-58 | 4 | 26.1 SY
DW-59 | 4 | 29.3 SY
DW-60 | 4 | 25.3 SY
DW-20 | 4 | 17.6 SY
DW-21 | 4 | 45.2 SY
DW-22 | 4 | 27.6 SY
DW-23 | 4 | 28.0 SY
DW-24 | 4 | 27.9 SY
DW-25 | 4 | 30.7 SY

1	159.7 SY	PAVEMENT REMOVAL
1	846.2 SY	PAVEMENT REMOVAL
2	343.4 SY	2" MILL
3	52.0 LF	STORM PIPE REMOVAL
4	22.4 SY	DRIVEWAY REMOVAL
4	26.1 SY	DRIVEWAY REMOVAL
4	29.3 SY	DRIVEWAY REMOVAL
4	25.3 SY	DRIVEWAY REMOVAL
4	12.0 SY	DRIVEWAY REMOVAL
4	17.6 SY	DRIVEWAY REMOVAL
4	45.2 SY	DRIVEWAY REMOVAL
4	27.6 SY	DRIVEWAY REMOVAL
4	28.0 SY	DRIVEWAY REMOVAL
4	27.9 SY	DRIVEWAY REMOVAL
4	30.7 SY	DRIVEWAY REMOVAL
5	5.1 SY	SIDEWALK REMOVAL
5	4.2 SY	SIDEWALK REMOVAL
6	43.6 LF	CURB & GUTTER REMOVAL
6	41.3 LF	CURB & GUTTER REMOVAL
6	45.4 LF	CURB & GUTTER REMOVAL
6	135.4 LF	CURB & GUTTER REMOVAL
6	60.2 LF	CURB & GUTTER REMOVAL
6	111.3 LF	CURB & GUTTER REMOVAL
6	4.9 LF	CURB & GUTTER REMOVAL
6	179.5 LF	CURB & GUTTER REMOVAL
6	32.2 LF	CURB & GUTTER REMOVAL
6	10.4 LF	CURB & GUTTER REMOVAL
6	13.4 LF	CURB & GUTTER REMOVAL
7		REMOVE & REPLACE STREET SIGN
10		REMOVE & RESET MAILBOX
11		REMOVE & RESET WATER METER
13		REMOVE INLET
16		TO BE PROTECTED
20	72.9 SY	REMOVE EXISTING PVMT FOR PATCHING

CAUTION
NATURAL GAS
UNDERGROUND ELECTRIC
SANITARY SEWER
WATERLINE

CAUTION
NATURAL GAS
UNDERGROUND ELECTRIC
SANITARY SEWER
WATERLINE

0 10 20 40
SCALE IN FEET

NP +XX.XX P

NP NON-PARTICIPATING
P PARTICIPATING
+XX.XX STATION CALLOUT

CONSTRUCTION NOTES:

1 PAVEMENT REMOVAL
2 2" MILL
3 STORM PIPE REMOVAL
4 DRIVEWAY REMOVAL
5 SIDEWALK REMOVAL
6 CURB & GUTTER REMOVAL
7 REMOVE & REPLACE STREET SIGN
8 FENCE REMOVAL
9 REMOVE TREE
10 REMOVE & RESET MAILBOX
11 REMOVE & RESET WATER METER
12 REMOVE MANHOLE
13 REMOVE INLET
14 REMOVE WATERLINE/SEWER LINE
15 STRUCTURE TO BE REMOVED BY OTHERS
16 TO BE PROTECTED
17 TO BE FILLED WITH CELL FILL CONCRETE OR APPROVED EQUAL
18 REMOVE CONCRETE CHANNEL
19 TO BE RELOCATED BY OTHERS
20 REMOVE EXISTING PVMT FOR PATCHING

BENCHMARK
BM-20024
CHISELED "X" SET
N=421813.68
E=2604424.73
EL=662.42

BENCHMARK
BM-20023
CHISELED "X" SET
N=421984.48
E=2604280.30
EL=663.74

LICENSED PROFESSIONAL ENGINEER
BENJAMIN W. FLETCHER
24921
OKLAHOMA
8/7/2020

OKIE 811
Know what's below. Call before you dig.

DEMOLITION PLAN
S. 118TH/117TH E. AVE.

PROJECT #144628-W, TMUA-W 18-16

MAINTENANCE ZONE 6028-W
TUPELO CREEK DRAINAGE

CITY OF TULSA, OKLAHOMA
ENGINEERING SERVICES DEPARTMENT

PLANS AND ESTIMATES PREPARED BY:
Meshek & Associates, L.L.C.
1437 S. Boulder Avenue, Suite 1550 Tulsa, OK 74119 (918)392-5620

REVISION	BY	DATE

PLAN SCALE	DRAWN	SCB	08/20
1" = 20'	DESIGNED	BWF	08/20
	SURVEY	AB	08/18
PROFILE SCALE	PROJ. MGR.		
HORIZONTAL: N/A	LEAD ENGR.		
	FIELD MGR.		
VERTICAL: N/A	RECOMMENDED		
	DESIGN MANAGER		
FILE:	DRAWING:		

APPROVED:
CITY ENGINEER
DATE:

ATLAS PAGE NO. 235
SHEET 59 OF 161 SHEETS

PRINT DATE: 08/07/2020 M:\City_of_Tulsa\16TUL02_MZ6028_Tupelo_Creek_Drainage\Design\Drawings\16TUL02_DEMOLITION_PLAN_S_117TH_E_AVE_SOUTH.dwg

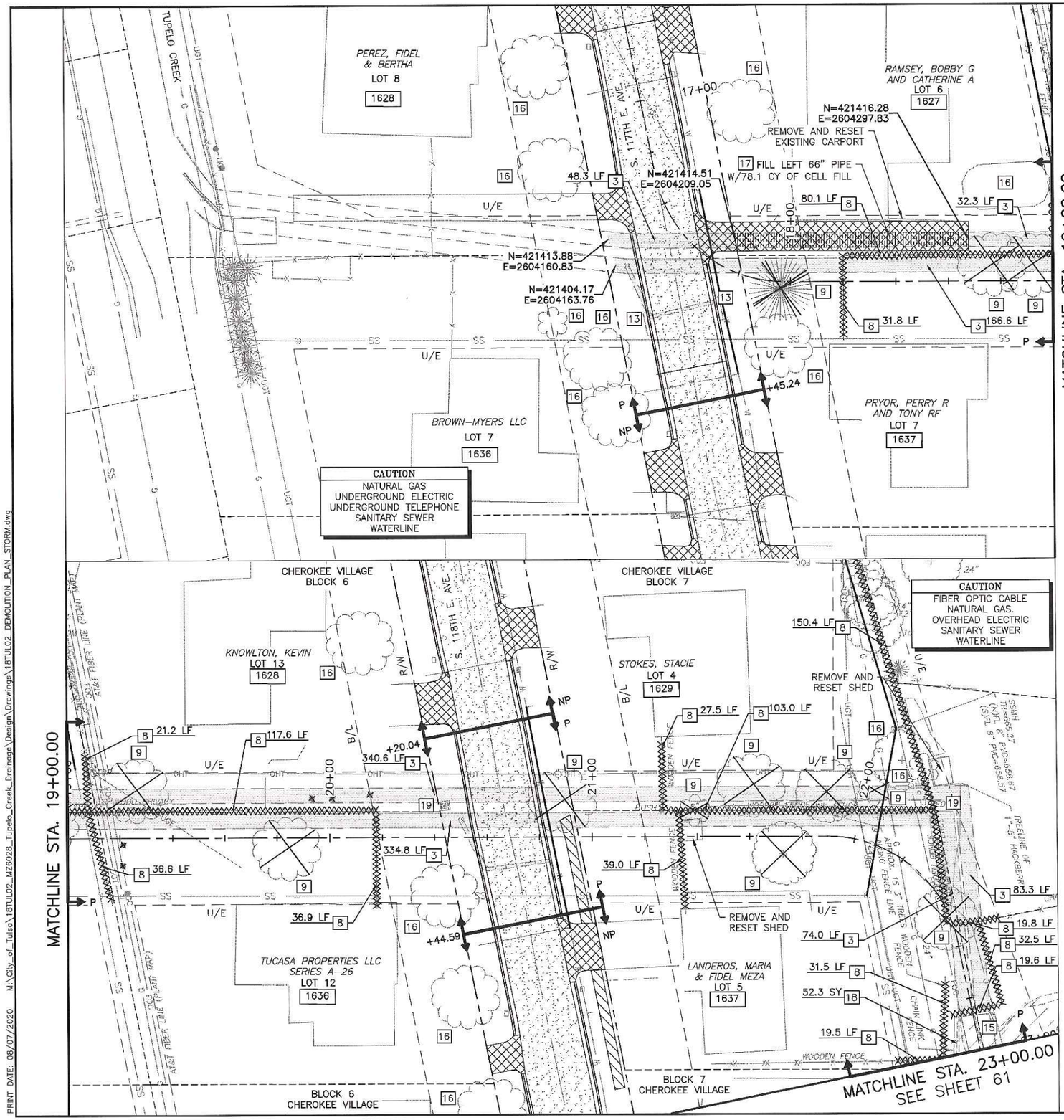

TREE REMOVAL STA. 16+40.00 – STA. 23+00.00

SIZE	TOTAL
6"–12"	1
13"–18"	2
19"–24"	3
25"+	5

CONSTRUCTION NOTES:

1. PAVEMENT REMOVAL
2. 2" MILL
3. STORM PIPE REMOVAL
4. DRIVEWAY REMOVAL
5. SIDEWALK REMOVAL
6. CURB & GUTTER REMOVAL
7. REMOVE STREET SIGN
8. FENCE REMOVAL
9. REMOVE TREE
10. REMOVE MAILBOX
11. REMOVE WATER METER
12. REMOVE MANHOLE
13. REMOVE INLET
14. REMOVE WATERLINE
15. REMOVE STRUCTURE
16. TO BE PROTECTED
17. TO BE FILLED WITH CELL FILL CONCRETE OR APPROVED EQUAL
18. REMOVE CONCRETE CHANNEL
19. TO BE RELOCATED BY OTHERS

LICENSED PROFESSIONAL ENGINEER — BENJAMIN W. FLETCHER — 24921 — OKLAHOMA

8/7/2020

OKIE 811 — Know what's below. Call before you dig.

DEMOLITION PLAN STORM SEWER

PROJECT #144628–W, TMUA–W 18–16

MAINTENANCE ZONE 6028–W
TUPELO CREEK DRAINAGE

CITY OF TULSA, OKLAHOMA
ENGINEERING SERVICES DEPARTMENT

PLANS AND ESTIMATES PREPARED BY:
Meshek & Associates, L.L.C.
1437 S. Boulder Avenue, Suite 1550 Tulsa, OK 74119 (918)392–5620

REVISION	BY	DATE

PLAN SCALE: 1" = 20'
PROFILE SCALE:
HORIZONTAL: N/A
VERTICAL: N/A
FILE:

DRAWN	SCB	08/20
DESIGNED	BWF	08/20
SURVEY	AB	08/18
PROJ. MGR.		
LEAD ENGR.		
FIELD MGR.		
RECOMMENDED		
DESIGN MANAGER		
DRAWING:		

APPROVED:
CITY ENGINEER
DATE:
ATLAS PAGE NO. 235
SHEET 60 OF 161 SHEETS

PRINT DATE: 08/07/2020 M:\City_of_Tulsa\18TUL02_MZ6028_Tupelo_Creek_Drainage\Design\Drawings\18TUL02_DEMOLITION_PLAN_STORM.dwg

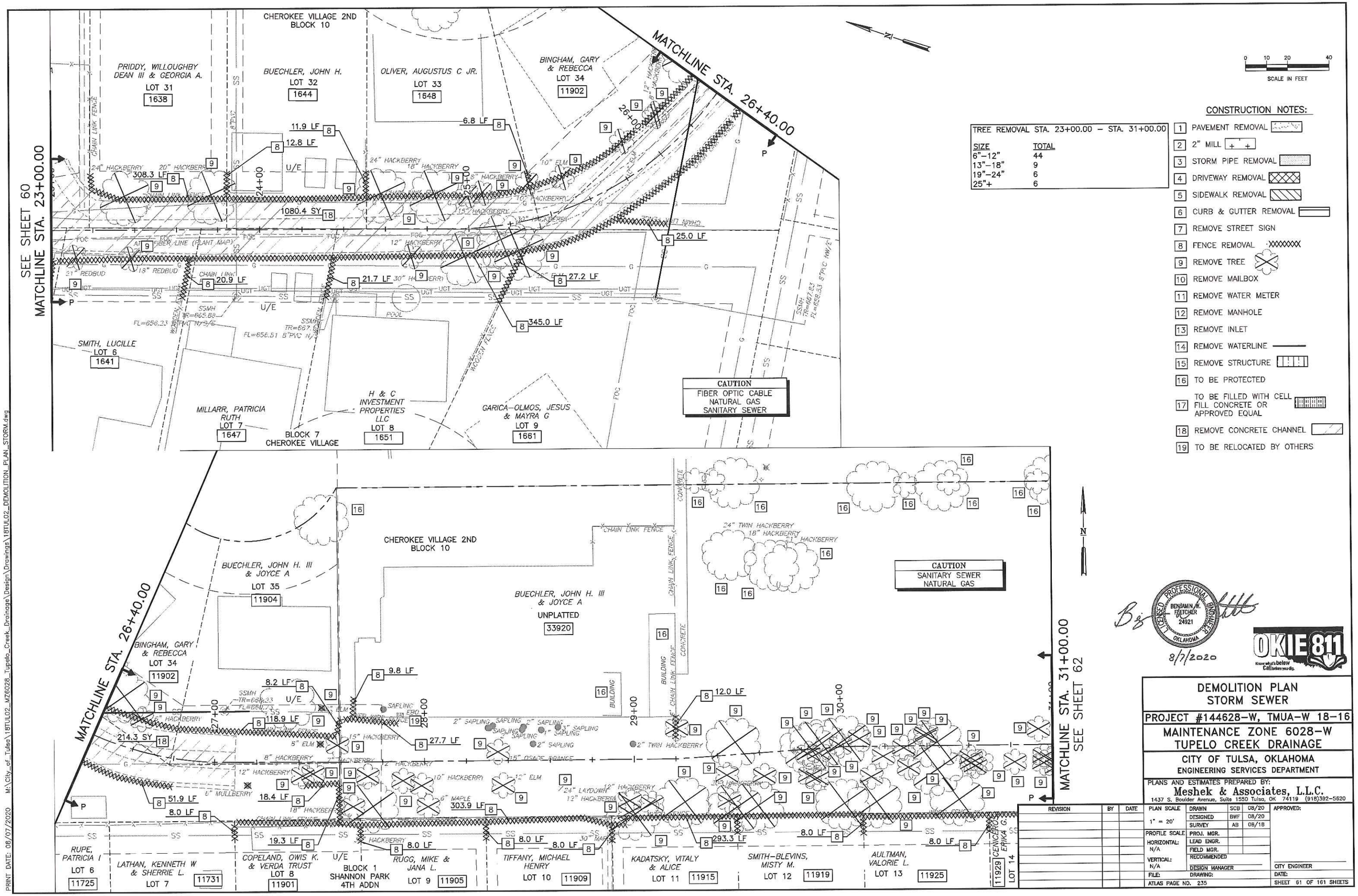

BENJAMIN W. FLETCHER 24921 LICENSED PROFESSIONAL ENGINEER OKLAHOMA

8/7/2020

OKIE 811 Know what's below Call before you dig.

DEMOLITION PLAN STORM SEWER

PROJECT #144628–W, TMUA–W 18–16

MAINTENANCE ZONE 6028–W
TUPELO CREEK DRAINAGE

CITY OF TULSA, OKLAHOMA
ENGINEERING SERVICES DEPARTMENT

PLANS AND ESTIMATES PREPARED BY:
Meshek & Associates, L.L.C.
1437 S. Boulder Avenue, Suite 1550 Tulsa, OK 74119 (918)392–5620

REVISION	BY	DATE

PLAN SCALE 1" = 20'	DRAWN	SCB	08/20
	DESIGNED	BWF	08/20
	SURVEY	AB	08/18
PROFILE SCALE HORIZONTAL: N/A VERTICAL: N/A	PROJ. MGR.		
	LEAD ENGR.		
	FIELD MGR.		
	RECOMMENDED DESIGN MANAGER		
FILE:	DRAWING:		
ATLAS PAGE NO. 239			

APPROVED:
CITY ENGINEER
DATE:
SHEET 61 OF 161 SHEETS

PRINT DATE: 08/07/2020 M:\City_of_Tulsa\18TUL02_WZ6028_Tupelo_Creek_Drainage\Design\Drawings\18TUL02_DEMOLITION_PLAN_STORM.dwg

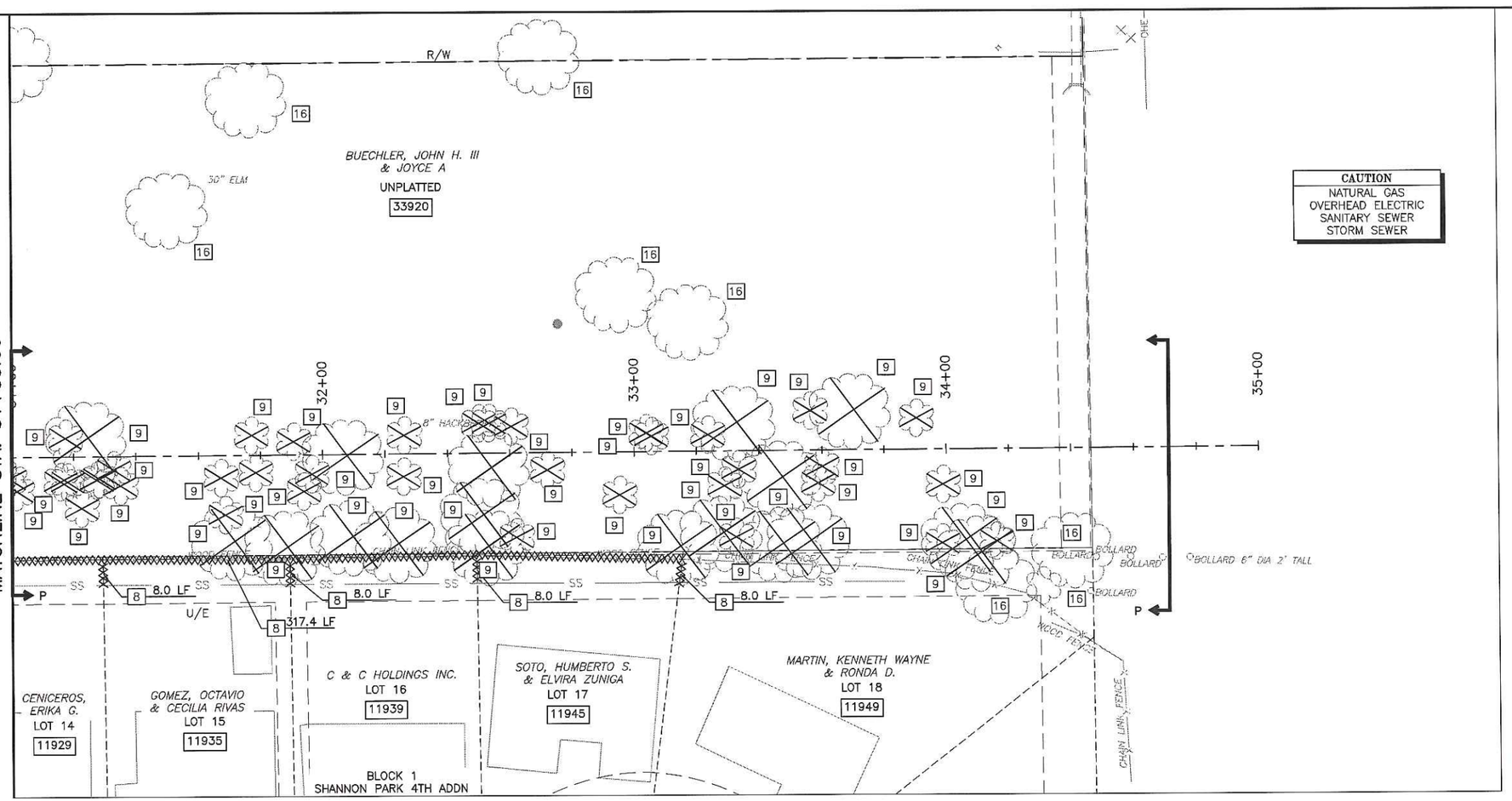

CAUTION
NATURAL GAS
OVERHEAD ELECTRIC
SANITARY SEWER
STORM SEWER

N

0 10 20 40
SCALE IN FEET

CONSTRUCTION NOTES:

1. PAVEMENT REMOVAL
2. 2" MILL
3. STORM PIPE REMOVAL
4. DRIVEWAY REMOVAL
5. SIDEWALK REMOVAL
6. CURB & GUTTER REMOVAL
7. REMOVE STREET SIGN
8. FENCE REMOVAL
9. REMOVE TREE
10. REMOVE MAILBOX
11. REMOVE WATER METER
12. REMOVE MANHOLE
13. REMOVE INLET
14. REMOVE WATERLINE
15. REMOVE STRUCTURE
16. TO BE PROTECTED
17. TO BE FILLED WITH CELL FILL CONCRETE OR APPROVED EQUAL
18. REMOVE CONCRETE CHANNEL
19. TO BE RELOCATED BY OTHERS

TREE REMOVAL STA. 31+00.00 – STA. 35+10.00

SIZE	TOTAL
6"–12"	28
13"–18"	6
19"–24"	1
25"+	5

LICENSED PROFESSIONAL ENGINEER
BENJAMIN W. FLETCHER
24921
OKLAHOMA

8/7/2020

OKIE 811
Know what's below Call before you dig.

DEMOLITION PLAN
STORM SEWER

PROJECT #144628–W, TMUA–W 18–16

MAINTENANCE ZONE 6028–W
TUPELO CREEK DRAINAGE

CITY OF TULSA, OKLAHOMA
ENGINEERING SERVICES DEPARTMENT

PLANS AND ESTIMATES PREPARED BY:
Meshek & Associates, L.L.C.
1437 S. Boulder Avenue, Suite 1550 Tulsa, OK 74119 (918)392-5620

REVISION	BY	DATE

PLAN SCALE	DRAWN	SCB	08/20
1" = 20'	DESIGNED	BWF	08/20
	SURVEY	AB	08/18
PROFILE SCALE	PROJ. MGR.		
HORIZONTAL: N/A	LEAD ENGR.		
	FIELD MGR.		
VERTICAL: N/A	RECOMMENDED DESIGN MANAGER		
FILE:	DRAWING:		
ATLAS PAGE NO. 235			

APPROVED:
CITY ENGINEER
DATE:
SHEET 62 OF 161 SHEETS

PRINT DATE: 08/07/2020 M:\City_of_Tulsa\18TUL02_MZ6028_Tupelo_Creek_Drainage\Design\Drawings\18TUL02_DEMOLITION_PLAN_STORM.dwg

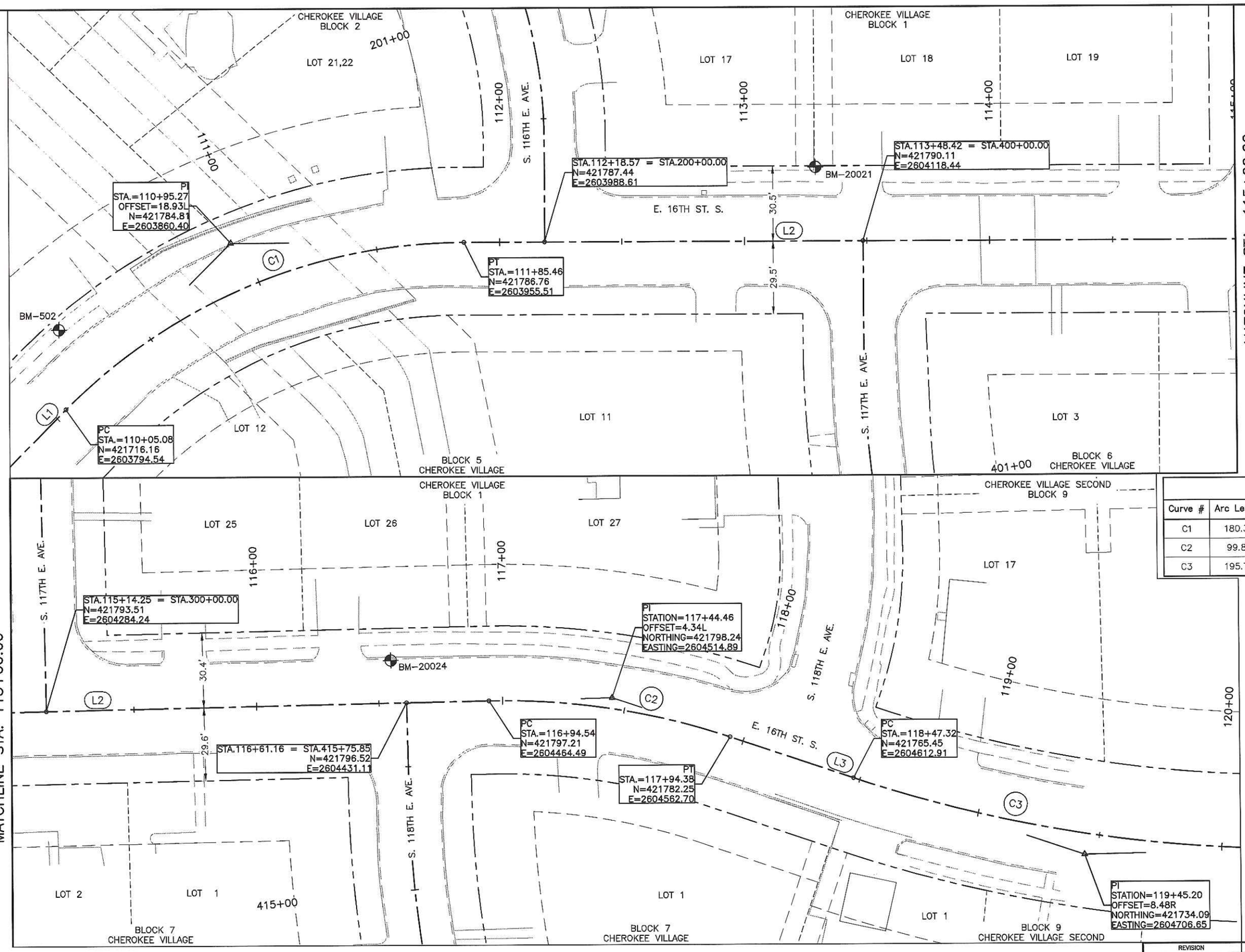

C.R.L. CURVE DATA

Curve #	Arc Length	Radius	Delta Angle	Chord Length	Chord Bearing
C1	180.37	229.59	45°00'49"	175.77	N66° 19' 01.99"E
C2	99.84	290.76	19°40'27"	99.35	S81° 20' 19.75"E
C3	195.75	571.59	19°37'20"	194.80	S81° 18' 45.95"E

C.R.L. LINE DATA

Line #	Length	Bearing
L1	546.56	N43° 48' 37.42"E
L2	509.08	N88° 49' 26.55"E
L3	52.94	S71° 30' 06.05"E

BENCHMARK
BM-502
CHISELED "X" SET
N=421748.45
E=2603791.04
EL=659.50

BENCHMARK
BM-20021
CHISELED "X" SET
N=421819.77
E=2604098.25
EL=660.44

BENCHMARK
BM-20024
CHISELED "X" SET
N=421813.68
E=2604424.73
EL=662.42

REGISTERED PROFESSIONAL ENGINEER BENJAMIN W. FLETCHER PE 24921 OKLAHOMA
8/7/2020

OKIE 811 Know what's below. Call before you dig.

GEOMETRIC DATA

PROJECT #144628-W, TMUA-W 18-16

MAINTENANCE ZONE 6028-W
TUPELO CREEK DRAINAGE

CITY OF TULSA, OKLAHOMA
ENGINEERING SERVICES DEPARTMENT

PLANS AND ESTIMATES PREPARED BY:
Meshek & Associates, L.L.C.
1437 S. Boulder Avenue, Suite 1550 Tulsa, OK 74119 (918)392-5620

REVISION	BY	DATE

PLAN SCALE 1" = 20'	DRAWN	SCB	08/20
	DESIGNED	BWF	08/20
	SURVEY	AB	08/18
PROFILE SCALE	PROJ. MGR.		
HORIZONTAL: N/A	LEAD ENGR.		
	FIELD MGR.		
VERTICAL: N/A	RECOMMENDED DESIGN MANAGER		
FILE:	DRAWING:		
ATLAS PAGE NO. 235			

APPROVED:

CITY ENGINEER

DATE:

SHEET 63 OF 161 SHEETS

PRINT DATE: 08/07/2020 M:\City_of_Tulsa\18TUL02_MZ6028_Tupelo_Creek_Drainage\Design\Drawings\18TUL02_GEOMETRIC_DATA_E_16TH_ST.dwg

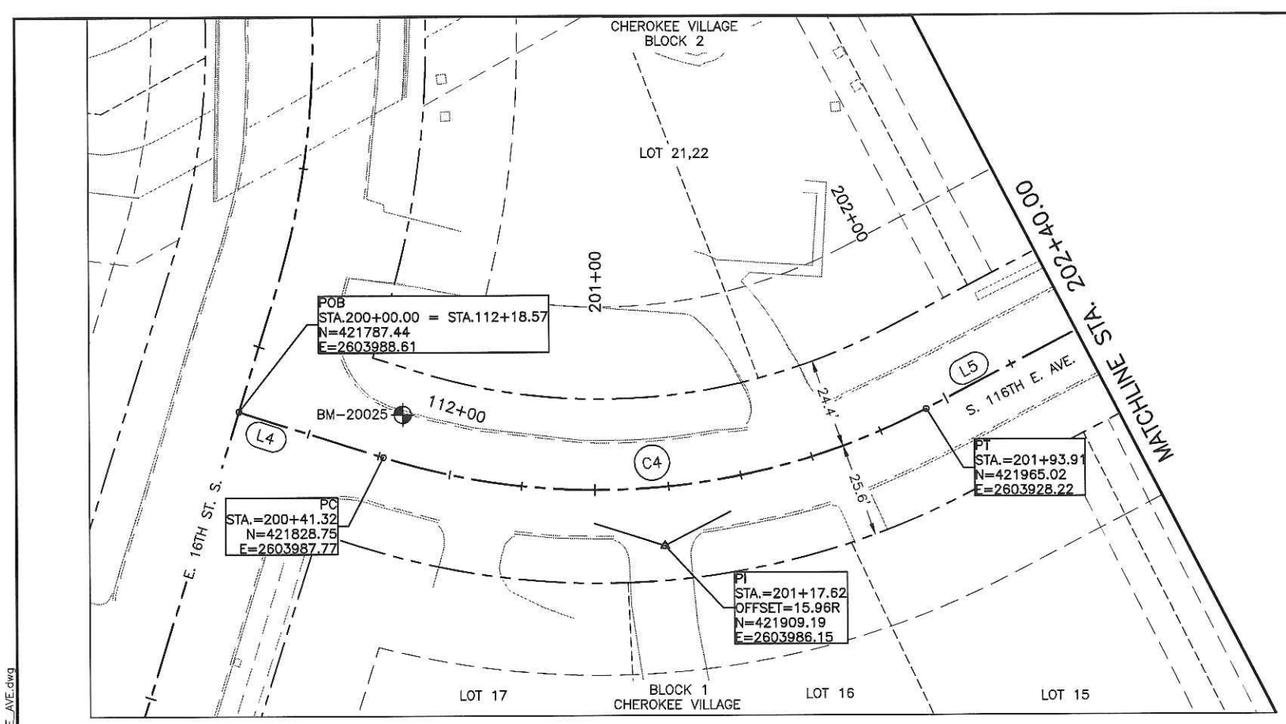

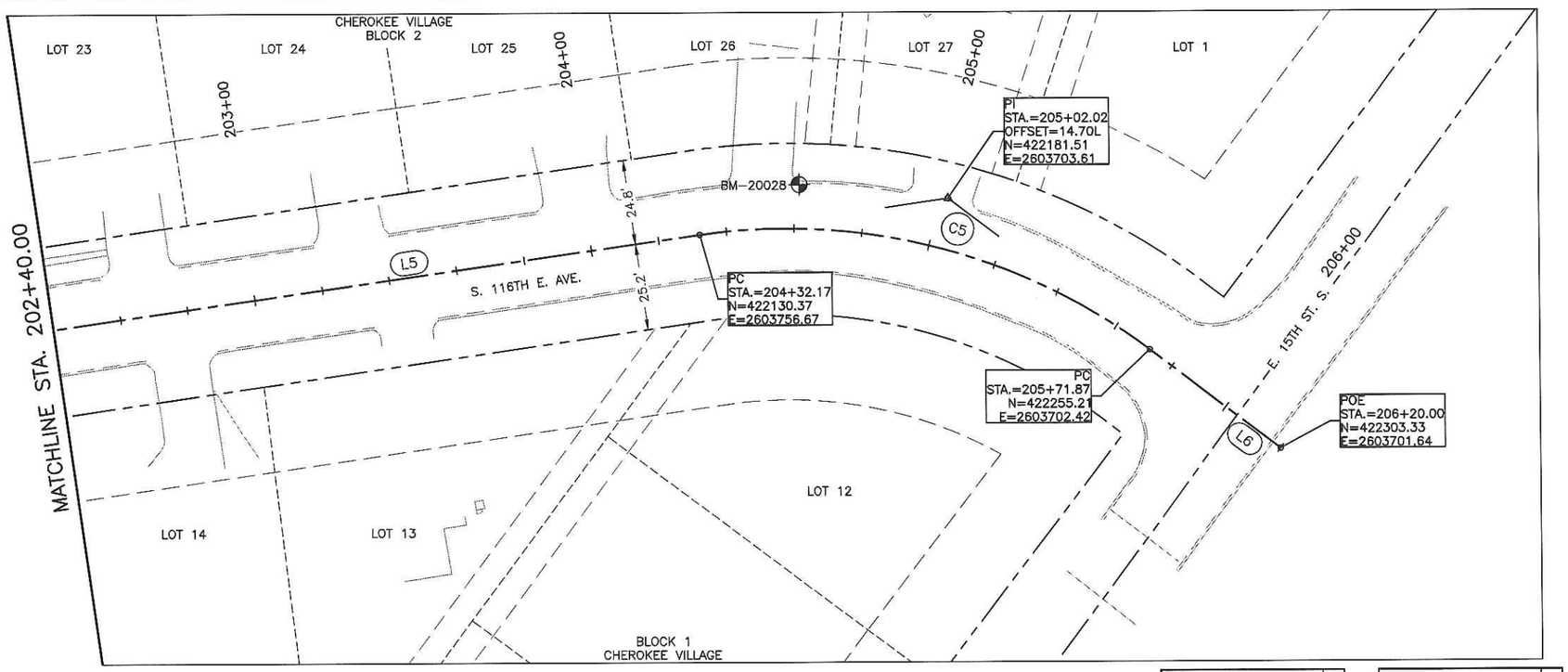

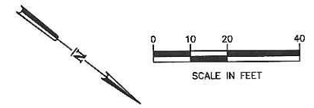

LEGEND

- SECTION LINE
- RIGHT-OF-WAY
- LOT LINE
- EXISTING BUILDING LINE
- EXISTING EASEMENT LINE
- C.R.L.
- BM-# BENCHMARK

C.R.L. LINE DATA		
Line #	Length	Bearing
L4	41.32	N1° 09' 37.48"W
L5	238.26	N46° 03' 17.34"W
L6	48.13	N0° 55' 29.38"W

C.R.L. CURVE DATA					
Curve #	Arc Length	Radius	Delta Angle	Chord Length	Chord Bearing
C4	152.59	194.74	44°53'40"	148.71	N23° 36' 27.41"W
C5	139.71	177.37	45°07'48"	136.12	N23° 29' 23.36"W

BENCHMARK
BM-20025
CHISELED "X" SET
N=421830.06
E=2603975.10
EL=658.98

BENCHMARK
BM-20028
CHISELED "X" SET
N=421813.68
E=2604424.73
EL=662.42

LICENSED PROFESSIONAL ENGINEER
BENJAMIN W. FLETCHER
24921
OKLAHOMA

8/7/2020

OKIE 811
Know what's below. Call before you dig.

GEOMETRIC DATA

PROJECT #144628-W, TMUA-W 18-16

MAINTENANCE ZONE 6028-W
TUPELO CREEK DRAINAGE

CITY OF TULSA, OKLAHOMA
ENGINEERING SERVICES DEPARTMENT

PLANS AND ESTIMATES PREPARED BY:
Meshek & Associates, L.L.C.
1437 S. Boulder Avenue, Suite 1550 Tulsa, OK 74119 (918)392-5620

REVISION	BY	DATE

PLAN SCALE 1" = 20'
PROFILE SCALE
HORIZONTAL: N/A
VERTICAL: N/A

DRAWN	SCB	08/20	APPROVED:
DESIGNED	BWF	08/20	
SURVEY	AB	08/18	
PROJ. MGR.			
LEAD ENGR.			
FIELD MGR.			
RECOMMENDED			
DESIGN MANAGER			CITY ENGINEER
FILE: DRAWING:			DATE:
ATLAS PAGE NO. 235			SHEET 54 OF 161 SHEETS

PRINT DATE: 08/07/2020 M:\City_of_Tulsa\18TUL02_MZ6028_Tupelo_Creek_Drainage\Design\Drawings\18TUL02_GEOMETRIC_DATA_S_116TH_E_AVE.dwg

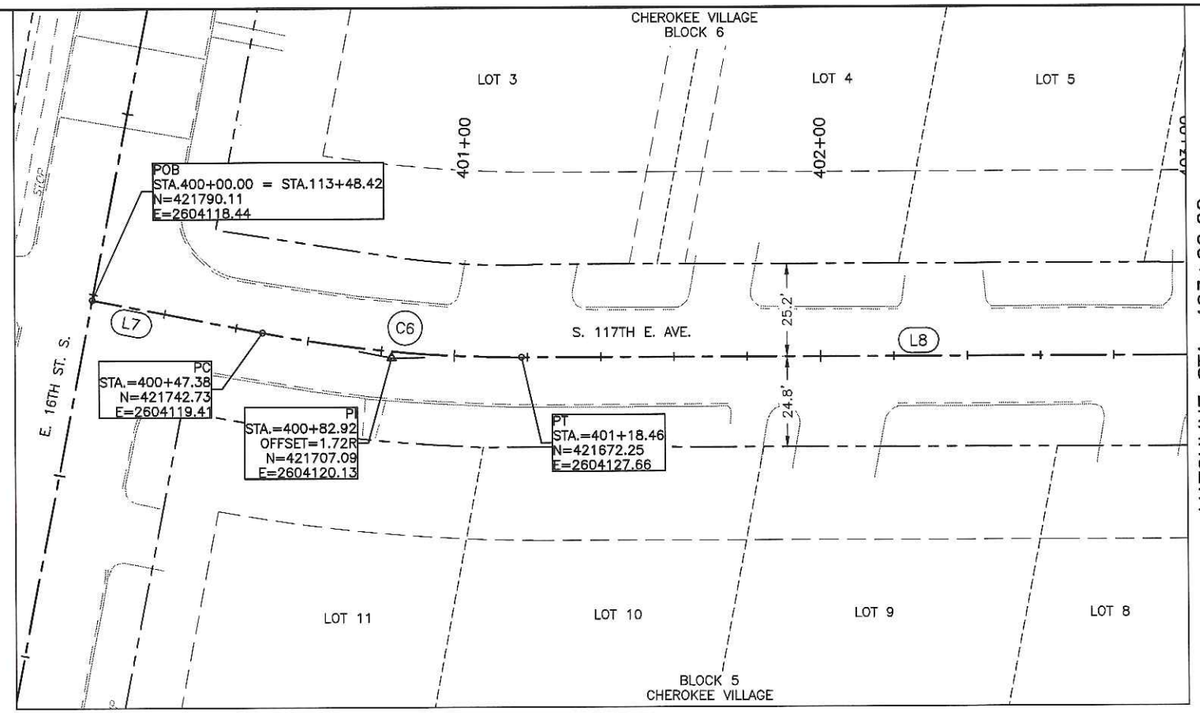

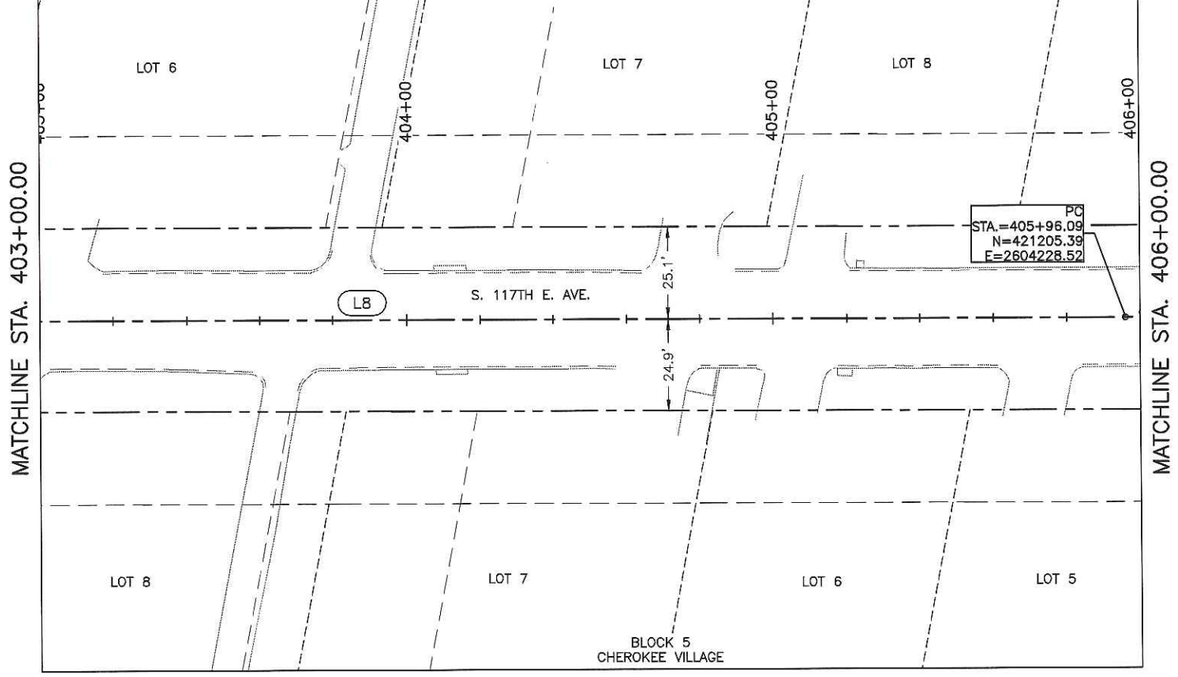

C.R.L. LINE DATA		
Line #	Length	Bearing
L7	47.38	S1° 10' 05.68"E
L8	477.63	S12° 11' 27.07"E

C.R.L. CURVE DATA					
Curve #	Arc Length	Radius	Delta Angle	Chord Length	Chord Bearing
C6	71.07	369.44	11°01'21"	70.96	S6° 40' 46.37"E

N

0 10 20 40
SCALE IN FEET

LEGEND

- SECTION LINE
- RIGHT-OF-WAY
- LOT LINE
- EXISTING BUILDING LINE
- EXISTING EASEMENT LINE
- C.R.L.
- BM-# BENCHMARK

LICENSED PROFESSIONAL ENGINEER
BENJAMIN W. FLETCHER
24921
OKLAHOMA

8/7/2020

OKIE 811
Know what's below
Call before you dig.

GEOMETRIC DATA

PROJECT #144628-W, TMUA-W 18-16

MAINTENANCE ZONE 6028-W
TUPELO CREEK DRAINAGE

CITY OF TULSA, OKLAHOMA
ENGINEERING SERVICES DEPARTMENT

PLANS AND ESTIMATES PREPARED BY:
Meshek & Associates, L.L.C.
1437 S. Boulder Avenue, Suite 1550 Tulsa, OK 74119 (918)392-5620

REVISION	BY	DATE

PLAN SCALE	DRAWN	SCB	08/20
1" = 20'	DESIGNED	BWF	08/20
	SURVEY	AB	08/18
PROFILE SCALE	PROJ. MGR.		
HORIZONTAL: N/A	LEAD ENGR.		
	FIELD MGR.		
VERTICAL: N/A	RECOMMENDED		
	DESIGN MANAGER		
FILE:	DRAWING:		
ATLAS PAGE NO. 235			

APPROVED:

CITY ENGINEER

DATE:

SHEET 65 OF 161 SHEETS

PRINT DATE: 08/07/2020 M:\City_of_Tulsa\18TUL02_MZ6028_Tupelo_Creek_Drainage\Design\Drawings\18TUL02_GEOMETRIC_DATA_S_117TH_E_AVE.dwg

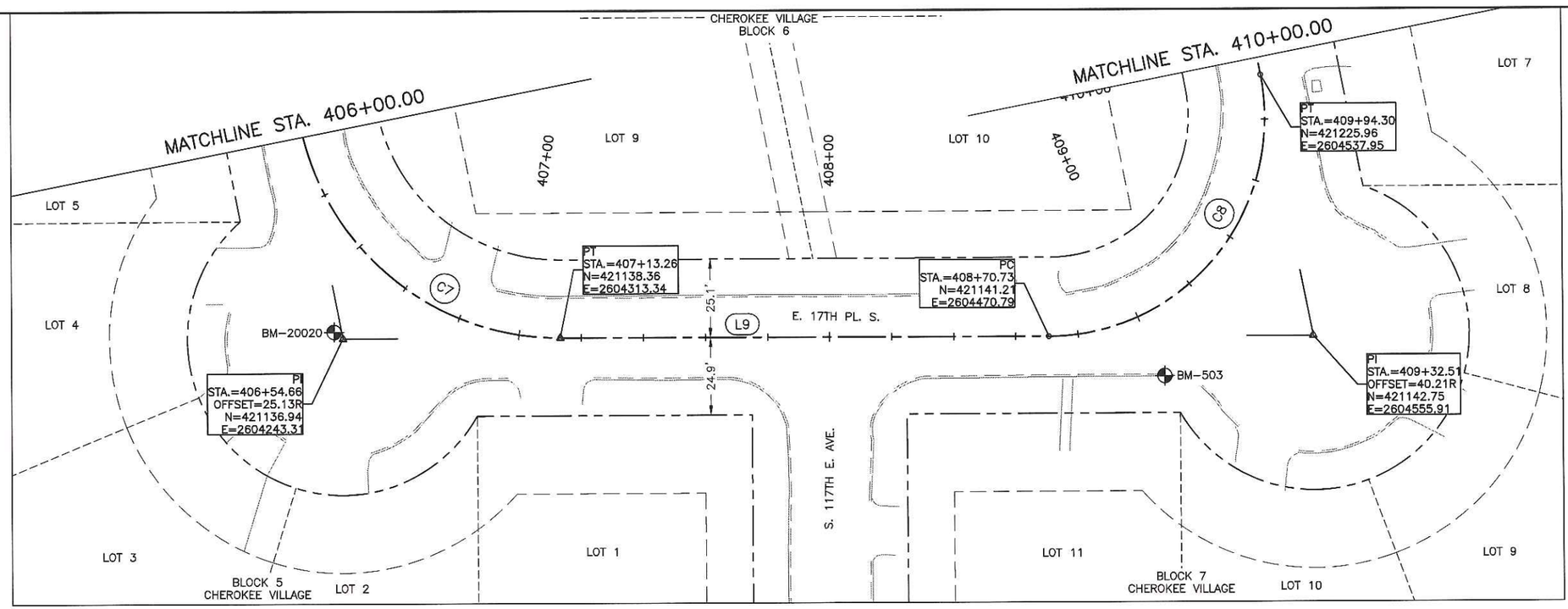

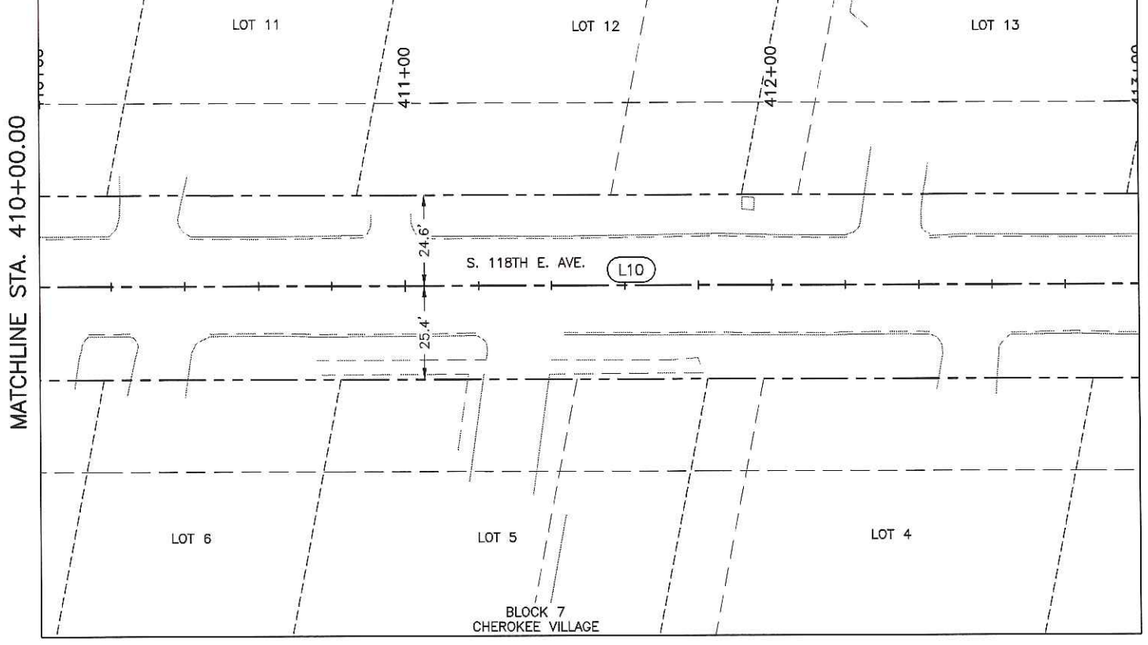

N

0 10 20 40
SCALE IN FEET

LEGEND

- SECTION LINE
- RIGHT-OF-WAY
- LOT LINE
- EXISTING BUILDING LINE
- EXISTING EASEMENT LINE
- C.R.L.
- BM-# BENCHMARK

C.R.L. LINE DATA		
Line #	Length	Bearing
L9	157.49	N88° 57' 46.34"E
L10	440.61	N12° 10' 41.35"W

C.R.L. CURVE DATA					
Curve #	Arc Length	Radius	Delta Angle	Chord Length	Chord Bearing
C7	117.15	85.00	78°58'04"	108.10	S51° 40' 28.82"E
C8	123.57	70.00	101°08'28"	108.14	N38° 23' 32.49"E

BENCHMARK
BM-20020
PK NAIL SET
N=421139.06
E=2604240.39
EL=666.65

BENCHMARK
BM-503
CHISELED "X" SET
N=421129.1260'
E=2604508.1310'
EL=666.88

LICENSED PROFESSIONAL ENGINEER
BENJAMIN W. FLETCHER
OK 24921
OKLAHOMA
8/7/2020

OKIE 811
Know what's below. Call before you dig.

GEOMETRIC DATA

PROJECT #144628-W, TMUA-W 18-16
MAINTENANCE ZONE 6028-W
TUPELO CREEK DRAINAGE
CITY OF TULSA, OKLAHOMA
ENGINEERING SERVICES DEPARTMENT

PLANS AND ESTIMATES PREPARED BY:
Meshek & Associates, L.L.C.
1437 S. Boulder Avenue, Suite 1550 Tulsa, OK 74119 (918)392-5520

REVISION	BY	DATE

PLAN SCALE 1" = 20'	DRAWN	SCB	08/20
	DESIGNED	BWF	08/20
	SURVEY	AB	08/18
PROFILE SCALE	PROJ. MGR.		
HORIZONTAL: N/A	LEAD ENGR.		
	FIELD MGR.		
VERTICAL: N/A	RECOMMENDED DESIGN MANAGER		
FILE:	DRAWING:		
ATLAS PAGE NO. 235			

APPROVED:

CITY ENGINEER

DATE:

SHEET 66 OF 161 SHEETS

PRINT DATE: 08/07/2020 M:\City_of_Tulsa\18TUL02_MZ6028_Tupelo_Creek_Drainage\Design\Drawings\18TUL02_GEOMETRIC_DATA_S_117TH_E_AVE.dwg

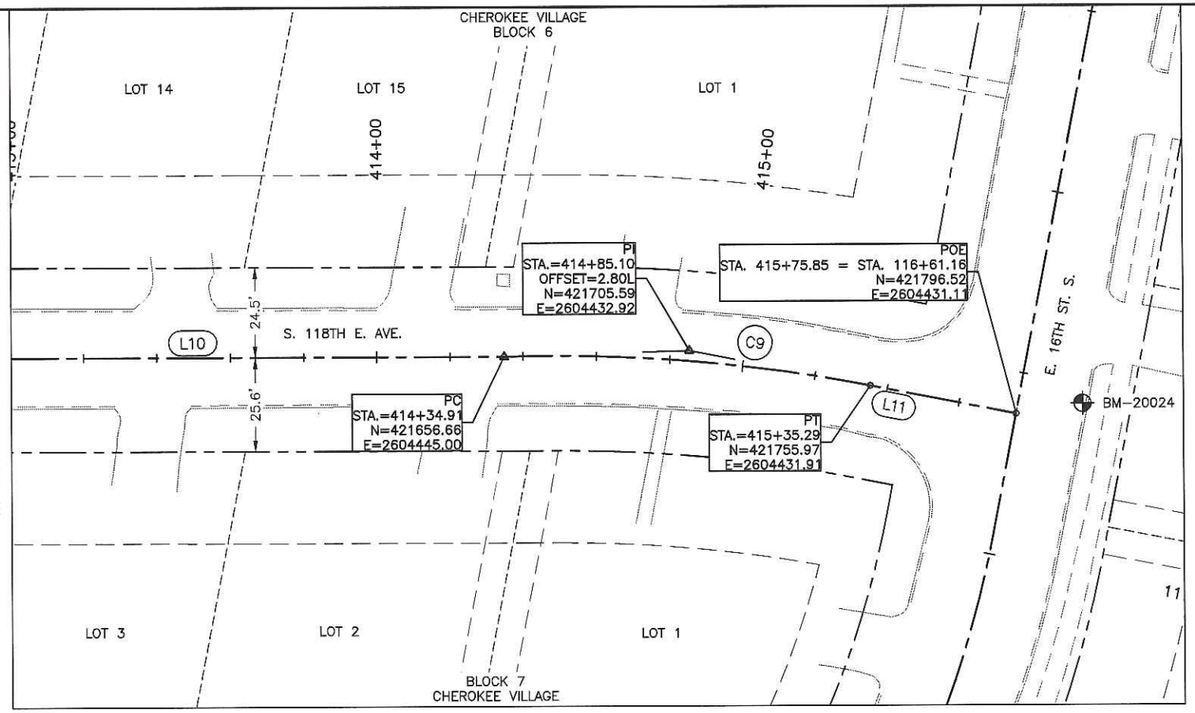

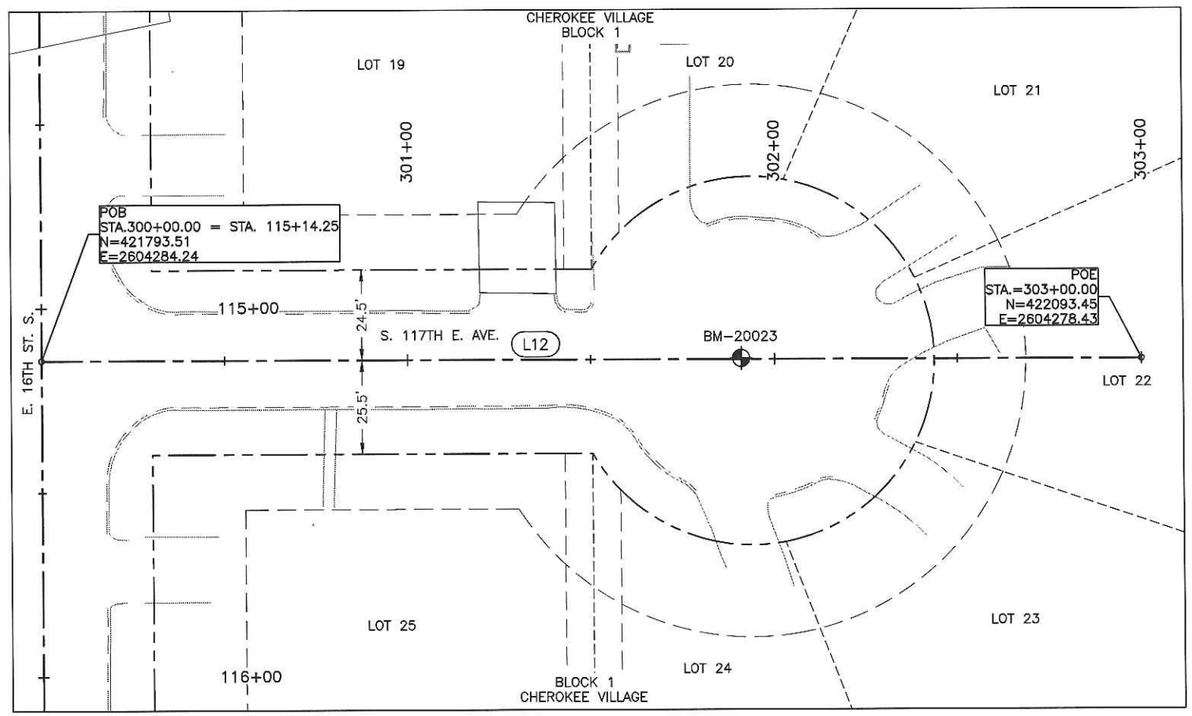

C.R.L. LINE DATA		
Line #	Length	Bearing
L10	440.61	N12° 10' 41.35"W
L11	40.56	N1° 08' 18.19"W
L12	300.00	N1° 06' 33.16"W

C.R.L. CURVE DATA					
Curve #	Arc Length	Radius	Delta Angle	Chord Length	Chord Bearing
C9	100.38	451.53	12°44'16"	100.18	N7° 30' 26.23"W

0 10 20 40
SCALE IN FEET

LEGEND

- SECTION LINE
- RIGHT-OF-WAY
- LOT LINE
- EXISTING BUILDING LINE
- EXISTING EASEMENT LINE
- C.R.L.
- BM-# BENCHMARK

BENCHMARK
BM-20023
PK NAIL SET
N=421984.48
E=2604280.30
EL=663.74

BENCHMARK
BM-20024
CHISELED "X" SET
N=421813.68
E=2604424.73
EL=662.42

BENJAMIN W. FLETCHER 24921 REGISTERED PROFESSIONAL ENGINEER OKLAHOMA

8/7/2020

OKIE 811 Know what's below. Call before you dig.

GEOMETRIC DATA

PROJECT #144628-W, TMUA-W 18-16

MAINTENANCE ZONE 6028-W
TUPELO CREEK DRAINAGE

CITY OF TULSA, OKLAHOMA
ENGINEERING SERVICES DEPARTMENT

PLANS AND ESTIMATES PREPARED BY:
Meshek & Associates, L.L.C.
1437 S. Boulder Avenue, Suite 1550 Tulsa, OK 74119 (918)392-5620

REVISION	BY	DATE

PLAN SCALE	DRAWN	SCB	08/20
1" = 20'	DESIGNED	BWF	08/20
	SURVEY	AB	08/18
PROFILE SCALE	PROJ. MGR.		
HORIZONTAL: N/A	LEAD ENGR.		
	FIELD MGR.		
VERTICAL: N/A	RECOMMENDED DESIGN MANAGER		
FILE:	DRAWING:		
ATLAS PAGE NO. 235			

APPROVED:

CITY ENGINEER

DATE:

SHEET 67 OF 161 SHEETS

PRINT DATE: 08/07/2020 M:\City_of_Tulsa\18TUL02_WZ6028_Tupelo_Creek_Drainage\Design\Drawings\18TUL02_GEOMETRIC_DATA_S_117TH_E_AVE.dwg

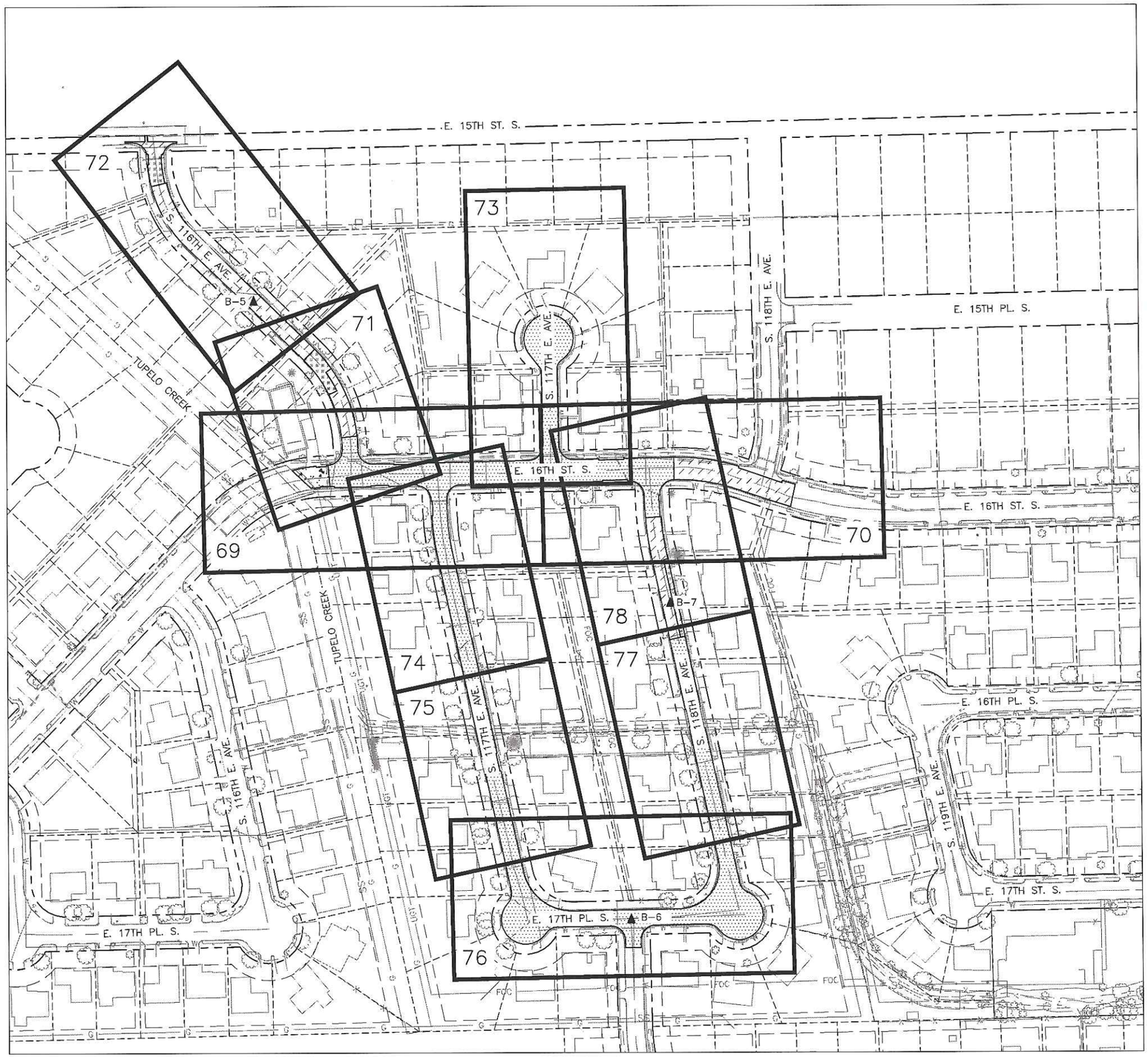

N

0 40 80 160

SCALE IN FEET

LEGEND

- FULL DEPTH PCC RECONSTRUCTION
- FULL DEPTH AC RECONSTRUCTION
- 2" MILL AND OVERLAY
- TYPE 1 AC PATCH
- ## PLAN & PROFILE SHEET NUMBER
- ▲ B-## BORING LOCATION

NOTE: A FULL GEOTECHNICAL REPORT CAN BE PROVIDED BY THE CITY OF TULSA ENGINEERING SERVICES LOCATED AT 2317 S. JACKSON, TULSA, OK 74107.

OKIE 811 Know what's below. Call before you dig.

LICENSED PROFESSIONAL ENGINEER BENJAMIN W. FLETCHER 24921 OKLAHOMA

8/7/2020

ROADWAY KEY PLAN

PROJECT #144628-W, TMUA-W 18-16

MAINTENANCE ZONE 6028-W
TUPELO CREEK DRAINAGE

CITY OF TULSA, OKLAHOMA
ENGINEERING SERVICES DEPARTMENT

PLANS AND ESTIMATES PREPARED BY:
Meshek & Associates, L.L.C.
1437 S. Boulder Avenue, Suite 1550 Tulsa, OK 74119 (918)392-5620

REVISION	BY	DATE

PLAN SCALE: 1" = 80'
PROFILE SCALE: HORIZONTAL: N/A; VERTICAL: N/A

DRAWN	SCB	08/20	APPROVED:
DESIGNED	BWF	08/20	
SURVEY	AB	08/18	
PROJ. MGR.			
LEAD ENGR.			
FIELD MGR.			
RECOMMENDED			
DESIGN MANAGER			CITY ENGINEER
FILE:	DRAWING:		DATE:
ATLAS PAGE NO. 235			SHEET 68 OF 161 SHEETS

PRINT DATE: 08/07/2020 M:\City_of_Tulsa\18TUL02_MZ6028_Tupelo_Creek_Drainage\Design\Drawings\18TUL02_KEY_PLAN.dwg

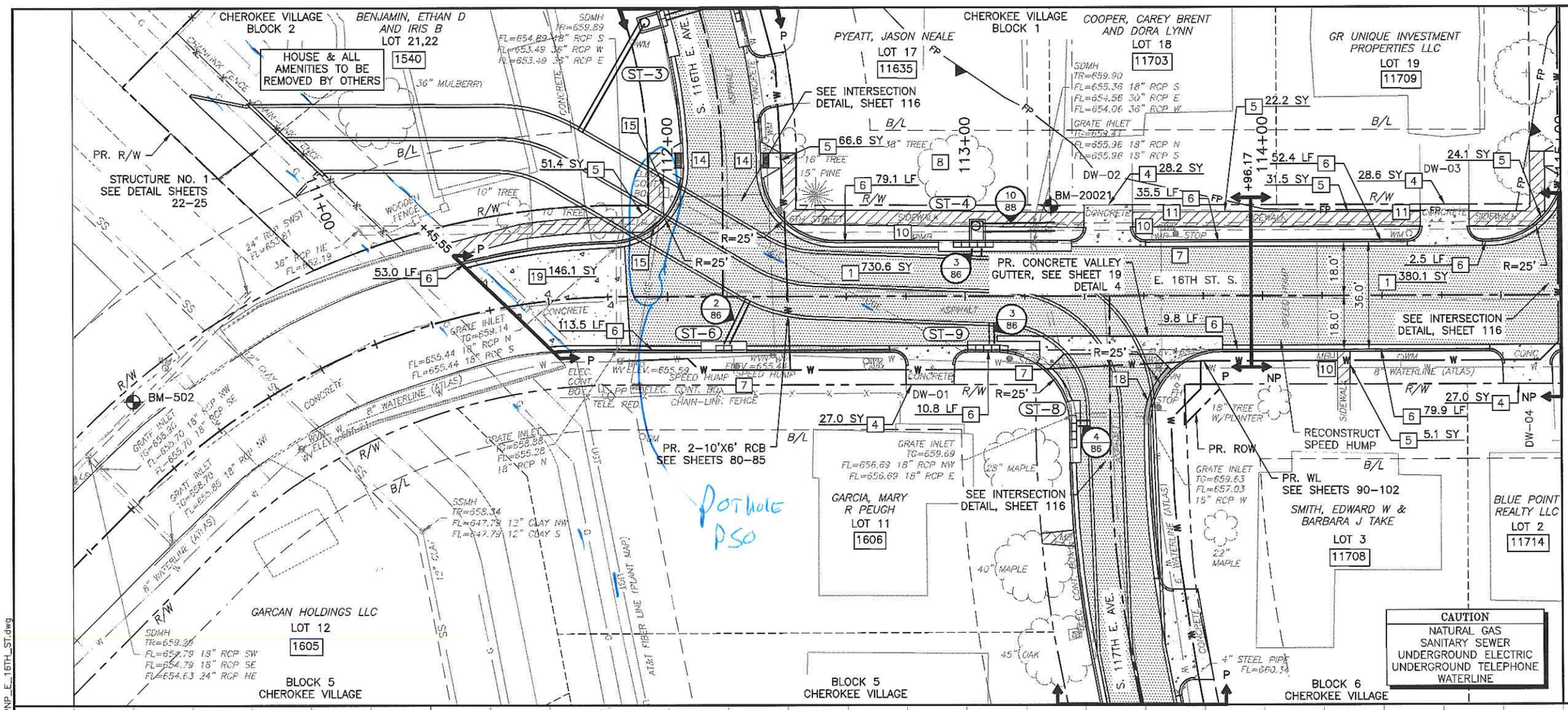

MATCHLINE STA. 115+00.00
SEE SHEET 70

SCALE IN FEET 0 10 20 40

NP NON–PARTICIPATING
P PARTICIPATING
+XX.XX STATION CALLOUT

CONSTRUCTION NOTES:

1. FULL DEPTH AC RECONSTRUCTION
2. 2" MILL AND OVERLAY
3. TYPE 1 AC PATCH
4. CONSTRUCT CONCRETE DRIVEWAY
5. CONSTRUCT SIDEWALK
6. CONSTRUCT 2'–2" CURB & GUTTER
7. REMOVE AND REPLACE SIGN
8. PROTECT TREE
9. REMOVE TREE
10. REMOVE AND RESET MAILBOX
11. REMOVE AND RESET WATER METER
12. ADJUST WATER METER TO GRADE
13. ADJUST WATER VALVE TO GRADE
14. CONSTRUCT TYPE "A" ADA RAMP
15. TO BE RELOCATED BY OTHERS
16. TO BE PROTECTED
17. TIE ROOF DRAIN TO PAVEMENT EDGE DRAIN
18. CONSTRUCT FALLAWAY CURB & GUTTER
19. FULL DEPTH PCC RECONSTRUCTION 4

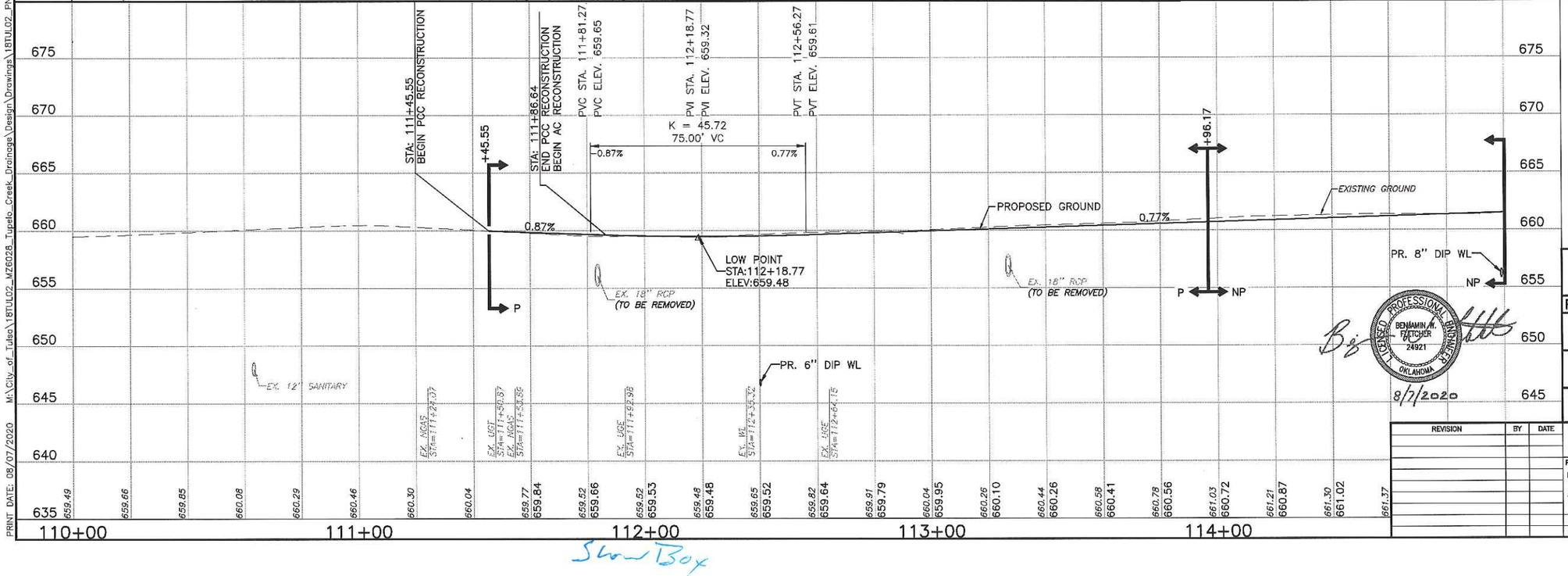

BENCHMARK
BM–502
CHISELED "X" SET
N=421748.45
E=2603791.04
EL=659.50

BENCHMARK
BM–20021
CHISELED "X" SET
N=421819.77
E=2604098.25
EL=660.44

OKIE 811 Know what's below Call before you dig.

ROADWAY PLAN & PROFILE E. 16TH ST. S.

PROJECT #144628–W, TMUA–W 18–16

MAINTENANCE ZONE 6028–W
TUPELO CREEK DRAINAGE

CITY OF TULSA, OKLAHOMA
ENGINEERING SERVICES DEPARTMENT

LICENSED PROFESSIONAL ENGINEER BENJAMIN M. FLETCHER 24921 OKLAHOMA
8/7/2020

PLANS AND ESTIMATES PREPARED BY:
Meshek & Associates, L.L.C.
1437 S. Boulder Avenue, Suite 1550 Tulsa, OK 74119 (918)392–5620

REVISION	BY	DATE

PLAN SCALE 1" = 20'	DRAWN	SCB	08/20	APPROVED:
	DESIGNED	BWF	08/20	
	SURVEY	AB	08/18	
PROFILE SCALE	PROJ. MGR.			
HORIZONTAL: 1" = 20'	LEAD ENGR.			
	FIELD MGR.			
VERTICAL: 1" = 5'	RECOMMENDED			
	DESIGN MANAGER			CITY ENGINEER
FILE:	DRAWING:			DATE:
ATLAS PAGE NO. 235				SHEET 69 OF 161 SHEETS

PRINT DATE: 08/07/2020 M:\City_of_Tulsa\18TUL02_MZ6028_Tupelo_Creek_Drainage\Design\Drawings\18TUL02_PNP_E_16TH_ST.dwg

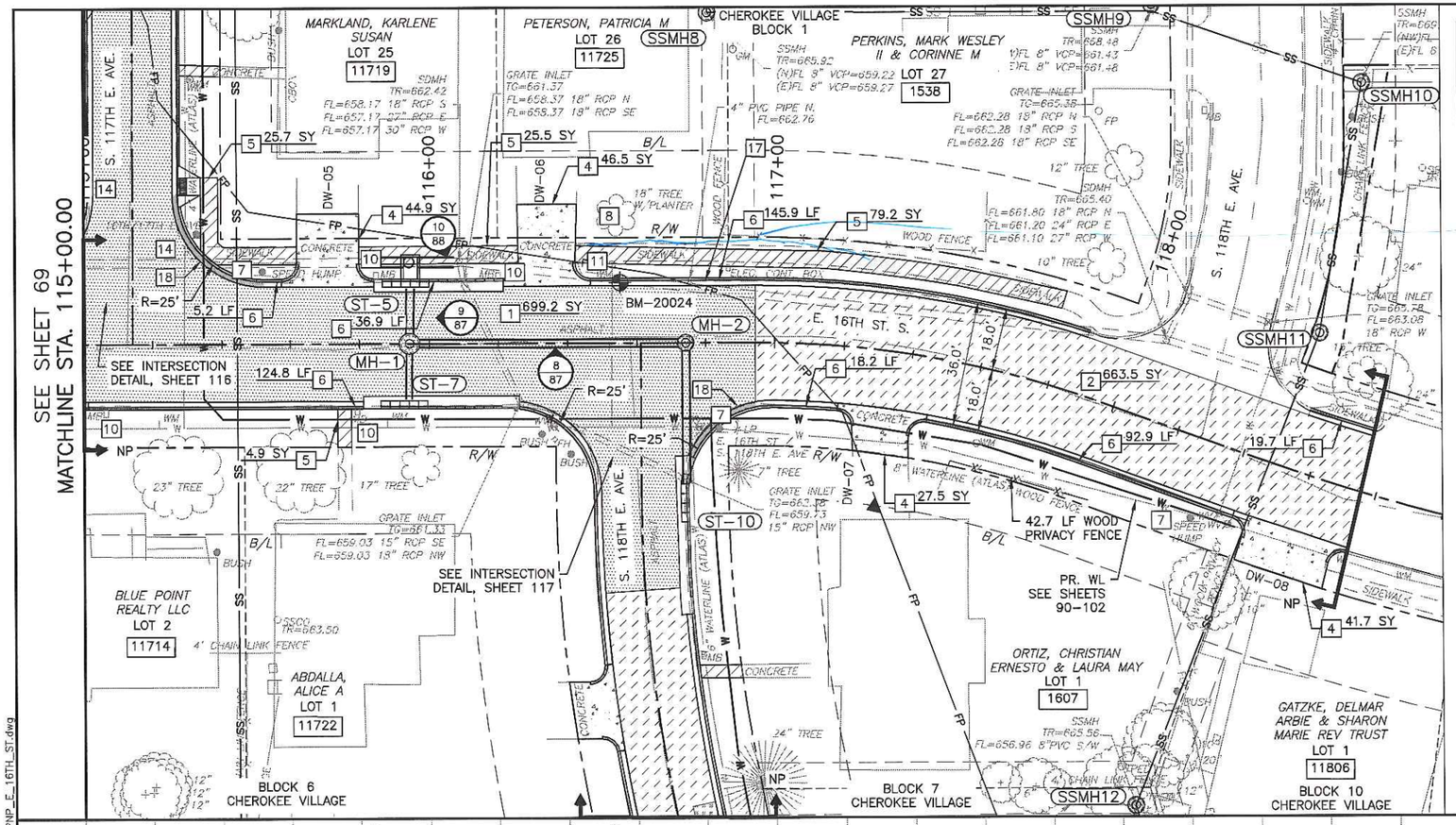

CAUTION
FIBER OPTIC CABLE
NATURAL GAS
SANITARY SEWER
UNDERGROUND ELECTRIC
UNDERGROUND TELEPHONE
WATERLINE

Place Sidewalk To Avoid Electric Box 1'N.

N

0 10 20 40
SCALE IN FEET

NP +XX.XX
P +XX.XX

NP NON-PARTICIPATING
P PARTICIPATING
+XX.XX STATION CALLOUT

CONSTRUCTION NOTES:

1. FULL DEPTH AC RECONSTRUCTION
2. 2" MILL AND OVERLAY
3. TYPE 1 AC PATCH
4. CONSTRUCT CONCRETE DRIVEWAY
5. CONSTRUCT SIDEWALK
6. CONSTRUCT 2'-2" CURB & GUTTER
7. REMOVE AND REPLACE SIGN
8. PROTECT TREE
9. REMOVE TREE
10. REMOVE AND RESET MAILBOX
11. REMOVE AND RESET WATER METER
12. ADJUST WATER METER TO GRADE
13. ADJUST WATER VALVE TO GRADE
14. CONSTRUCT TYPE "A" ADA RAMP
15. TO BE RELOCATED BY OTHERS
16. TO BE PROTECTED
17. TIE ROOF DRAIN TO PAVEMENT EDGE DRAIN
18. CONSTRUCT FALLAWAY CURB & GUTTER
19. FULL DEPTH PCC RECONSTRUCTION

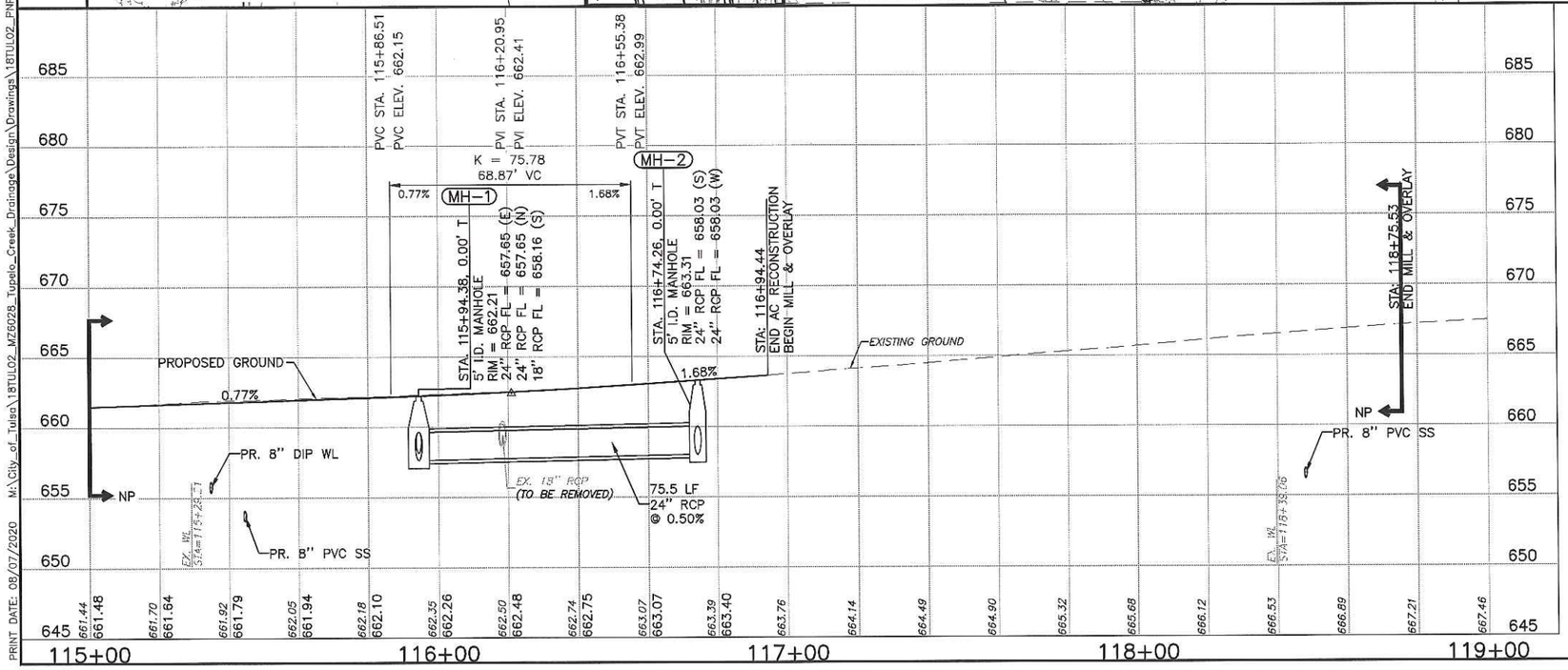

BENCHMARK
BM-20024
CHISELED "X" SET
N=421813.68
E=2604424.73
EL=662.42

OKIE 811
Know what's below. Call before you dig.

LICENSED PROFESSIONAL ENGINEER
BENJAMIN W. FLETCHER
24921
OKLAHOMA

8/7/2020

ROADWAY PLAN & PROFILE
E. 16TH ST. S.

PROJECT #144628-W, TMUA-W 18-16

MAINTENANCE ZONE 6028-W
TUPELO CREEK DRAINAGE

CITY OF TULSA, OKLAHOMA
ENGINEERING SERVICES DEPARTMENT

PLANS AND ESTIMATES PREPARED BY:
Meshek & Associates, L.L.C.
1437 S. Boulder Avenue, Suite 1550 Tulsa, OK 74119 (918)392-5520

REVISION	BY	DATE

PLAN SCALE	DRAWN	SCB	08/20
1" = 20'	DESIGNED	BWF	08/20
	SURVEY	AB	08/18
PROFILE SCALE	PROJ. MGR.		
HORIZONTAL: 1" = 20'	LEAD ENGR.		
	FIELD MGR.		
VERTICAL: 1" = 5'	RECOMMENDED		
	DESIGN MANAGER		
FILE:	DRAWING:		
ATLAS PAGE NO. 235			

APPROVED:

CITY ENGINEER

DATE:

SHEET 70 OF 161 SHEETS

PRINT DATE: 08/07/2020 M:\City_of_Tulsa\18TUL02_MZ6028_Tupelo_Creek_Drainage\Design\Drawings\18TUL02_PNP_E_16TH_ST.dwg

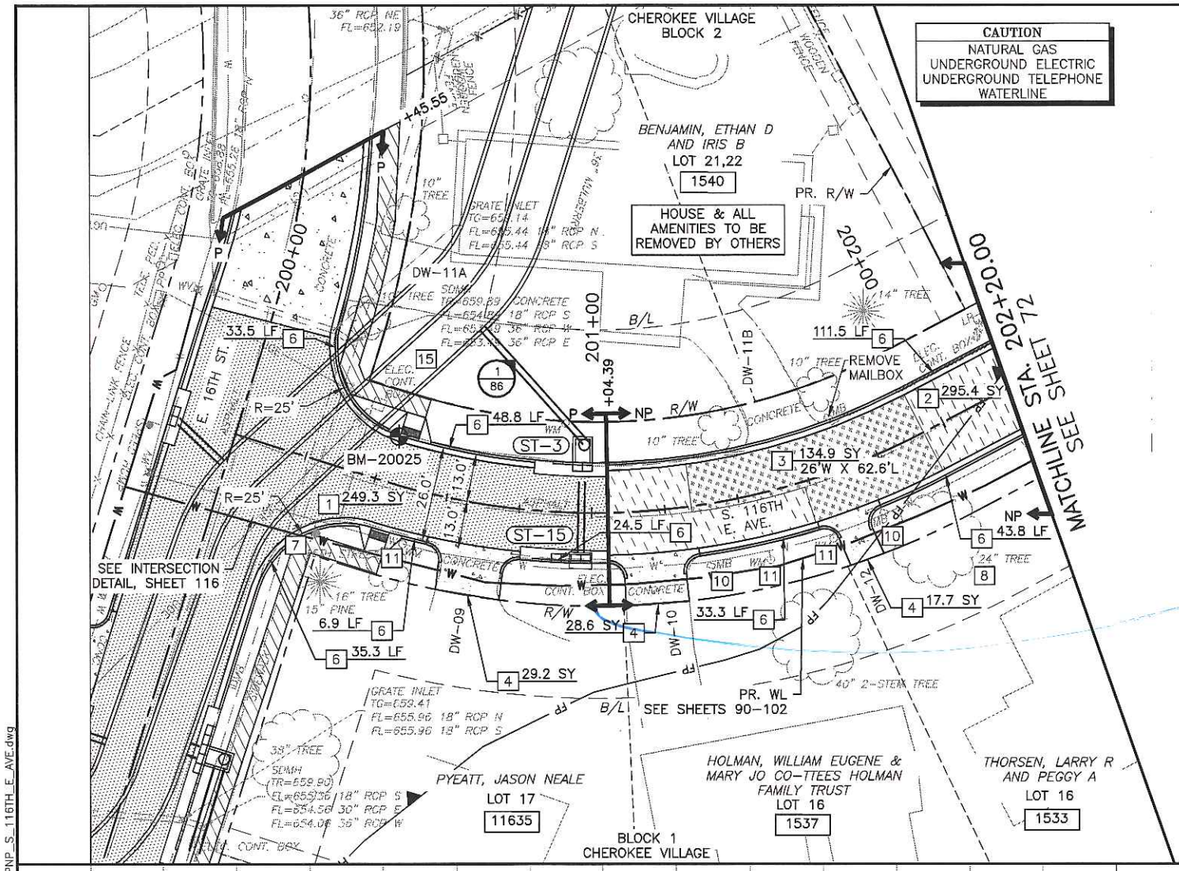

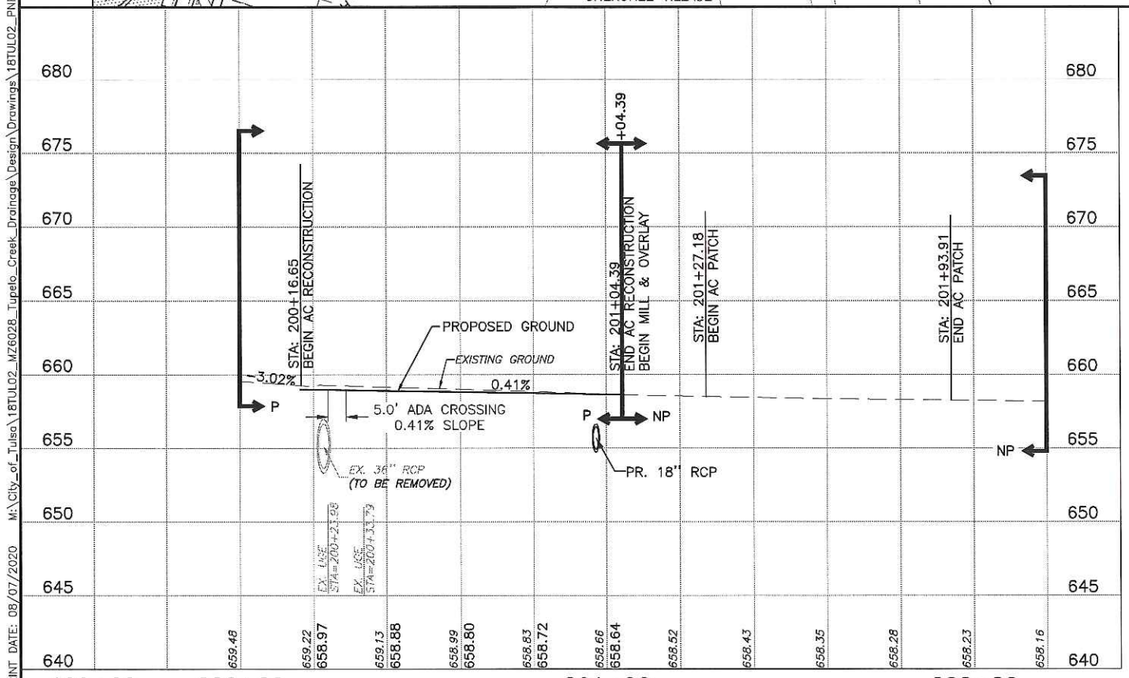

A.C. Just W/L To Remove Conflict

0 10 20 40
SCALE IN FEET

NP
+XX.XX
P

NP NON-PARTICIPATING
P PARTICIPATING
+XX.XX STATION CALLOUT

CONSTRUCTION NOTES:

1. FULL DEPTH AC RECONSTRUCTION
2. 2" MILL AND OVERLAY
3. TYPE 1 AC PATCH
4. CONSTRUCT CONCRETE DRIVEWAY
5. CONSTRUCT SIDEWALK
6. CONSTRUCT 2'-2" CURB & GUTTER
7. REMOVE AND REPLACE SIGN
8. PROTECT TREE
9. REMOVE TREE
10. REMOVE AND RESET MAILBOX
11. REMOVE AND RESET WATER METER
12. ADJUST WATER METER TO GRADE
13. ADJUST WATER VALVE TO GRADE
14. CONSTRUCT TYPE "A" ADA RAMP
15. TO BE RELOCATED BY OTHERS
16. TO BE PROTECTED
17. TIE ROOF DRAIN TO PAVEMENT EDGE DRAIN
18. CONSTRUCT FALLAWAY CURB & GUTTER
19. FULL DEPTH PCC RECONSTRUCTION

BENCHMARK
BM-20025
CHISELED "X" SET
N=421830.06
E=2603975.10
EL=658.98

OKIE 811
Know what's below. Call before you dig.

BENJAMIN W. FLETCHER
24921
PROFESSIONAL ENGINEER
OKLAHOMA
8/7/2020

ROADWAY PLAN & PROFILE
S. 116TH E. AVE.

PROJECT #144628-W, TMUA-W 18-16

MAINTENANCE ZONE 6028-W
TUPELO CREEK DRAINAGE

CITY OF TULSA, OKLAHOMA
ENGINEERING SERVICES DEPARTMENT

PLANS AND ESTIMATES PREPARED BY:
Meshek & Associates, L.L.C.
1437 S. Boulder Avenue, Suite 1550 Tulsa, OK 74119 (918)392-5620

REVISION	BY	DATE

PLAN SCALE	DRAWN	SCB	08/20
1" = 20'	DESIGNED	BWF	08/20
	SURVEY	AB	08/18
PROFILE SCALE	PROJ. MGR.		
HORIZONTAL: 1" = 20'	LEAD ENGR.		
	FIELD MGR.		
VERTICAL: 1" = 5'	RECOMMENDED		
	DESIGN MANAGER		
FILE:	DRAWING:		
ATLAS PAGE NO. 235			

APPROVED:

CITY ENGINEER
DATE:
SHEET 71 OF 161 SHEETS

PRINT DATE: 08/07/2020 M:\City_of_Tulsa\18TUL02_M26028_Tupelo_Creek_Drainage\Design\Drawings\18TUL02_PNP_S_116TH_E_AVE.dwg

Can Move SS?

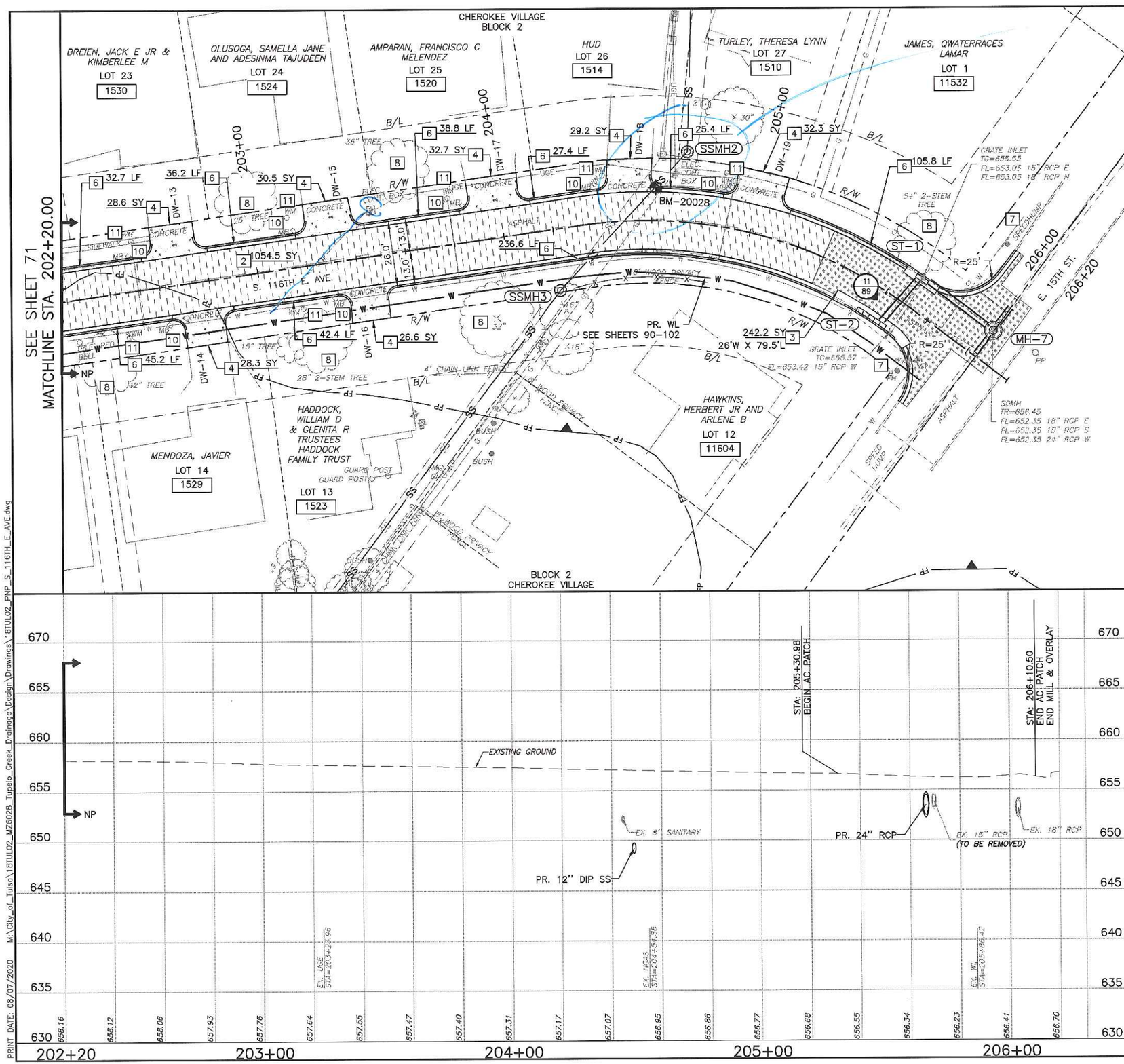

CAUTION
NATURAL GAS
UNDERGROUND ELECTRIC
UNDERGROUND TELEPHONE
WATERLINE

SCALE IN FEET: 0 10 20 40

NP +XX.XX P
NP NON-PARTICIPATING
P PARTICIPATING
+XX.XX STATION CALLOUT

CONSTRUCTION NOTES:

1. FULL DEPTH AC RECONSTRUCTION
2. 2" MILL AND OVERLAY
3. TYPE 1 AC PATCH
4. CONSTRUCT CONCRETE DRIVEWAY
5. CONSTRUCT SIDEWALK
6. CONSTRUCT 2'-2" CURB & GUTTER
7. REMOVE AND REPLACE SIGN
8. PROTECT TREE
9. REMOVE TREE
10. REMOVE AND RESET MAILBOX
11. REMOVE AND RESET WATER METER
12. ADJUST WATER METER TO GRADE
13. ADJUST WATER VALVE TO GRADE
14. CONSTRUCT TYPE "A" ADA RAMP
15. TO BE RELOCATED BY OTHERS
16. TO BE PROTECTED
17. TIE ROOF DRAIN TO PAVEMENT EDGE DRAIN
18. CONSTRUCT FALLAWAY CURB & GUTTER
19. FULL DEPTH PCC RECONSTRUCTION 4

BENCHMARK
BM-20028
CHISELED "X" SET
N=421813.68
E=2604424.73
EL=662.42

OKIE 811
Know what's below. Call before you dig.

LICENSED PROFESSIONAL ENGINEER
BENJAMIN W. FLETCHER
24921
OKLAHOMA
8/7/2020

ROADWAY PLAN & PROFILE
S. 116TH E. AVE.

PROJECT #144628-W, TMUA-W 18-16

MAINTENANCE ZONE 6028-W
TUPELO CREEK DRAINAGE

CITY OF TULSA, OKLAHOMA
ENGINEERING SERVICES DEPARTMENT

PLANS AND ESTIMATES PREPARED BY:
Meshek & Associates, L.L.C.
1437 S. Boulder Avenue, Suite 1550 Tulsa, OK 74119 (918)392-5620

REVISION	BY	DATE

PLAN SCALE 1" = 20'	DRAWN	SCB	08/20
	DESIGNED	BWF	08/20
	SURVEY	AB	08/18
PROFILE SCALE	PROJ. MGR.		
HORIZONTAL: 1" = 20'	LEAD ENGR.		
	FIELD MGR.		
VERTICAL: 1" = 5'	RECOMMENDED		
	DESIGN MANAGER		
FILE:	DRAWING:		
ATLAS PAGE NO. 235			

APPROVED:
CITY ENGINEER
DATE:
SHEET 72 OF 161 SHEETS

PRINT DATE: 08/07/2020 M:\City_of_Tulsa\18TUL02_MZ6028_Tupelo_Creek_Drainage\Design\Drawings\18TUL02_PNP_S_116TH_E_AVE.dwg

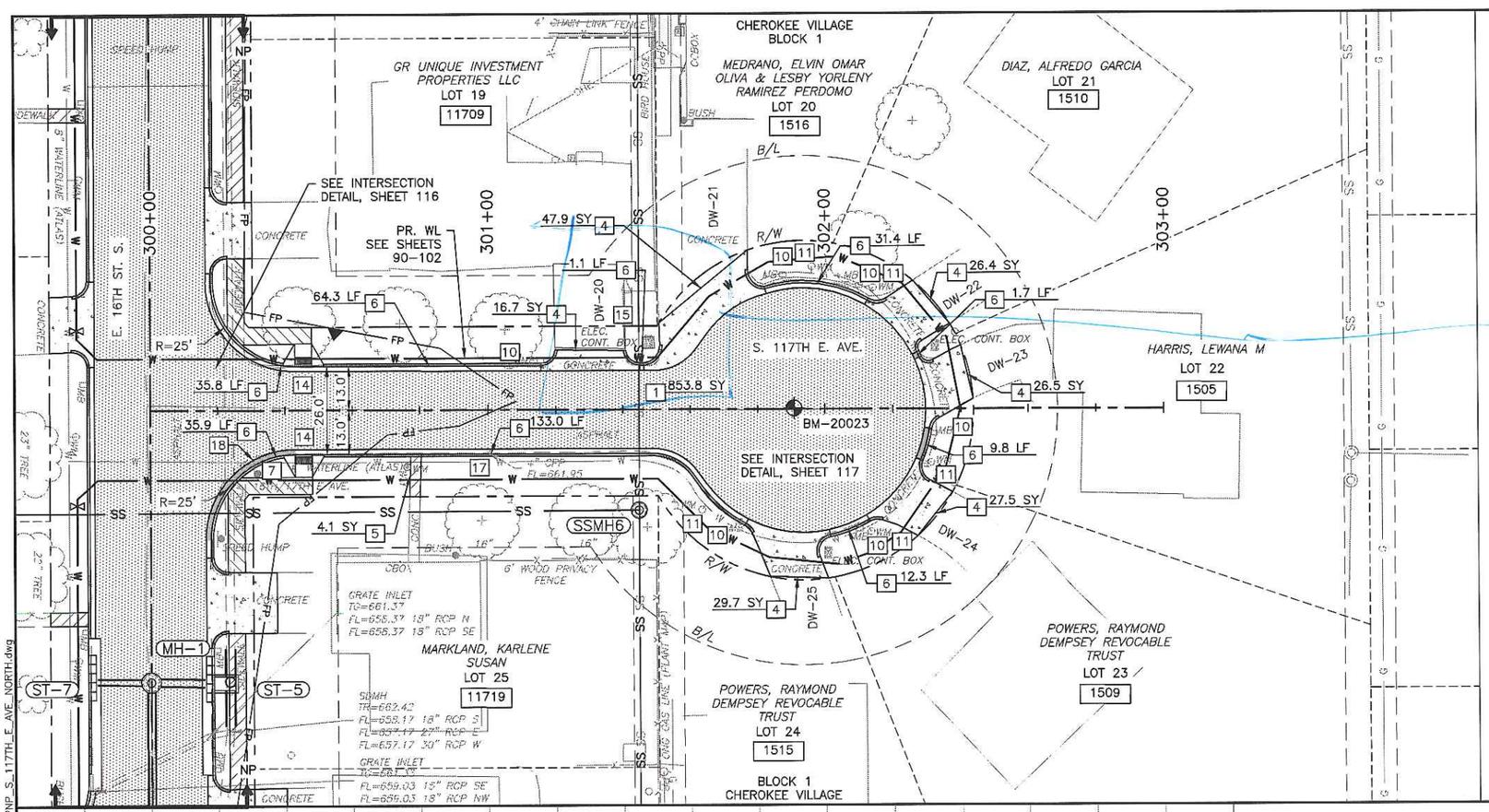

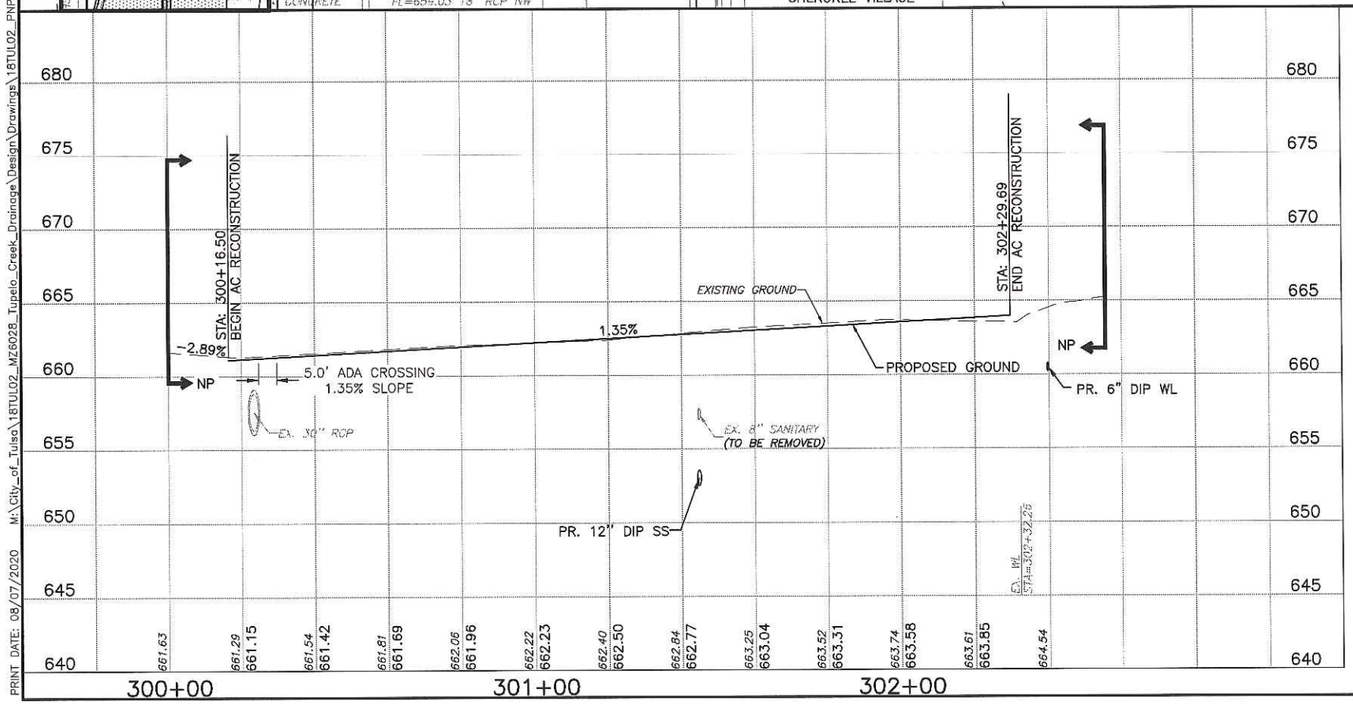

CAUTION
NATURAL GAS
OVERHEAD ELECTRIC
UNDERGROUND ELECTRIC
SANITARY SEWER
WATERLINE

CAUTION USE NOTE AVOID

0 10 20 40
SCALE IN FEET

NP +XX.XX
P +XX.XX

NP NON-PARTICIPATING
P PARTICIPATING
+XX.XX STATION CALLOUT

CONSTRUCTION NOTES:

1. FULL DEPTH AC RECONSTRUCTION
2. 2" MILL AND OVERLAY
3. TYPE 1 AC PATCH
4. CONSTRUCT CONCRETE DRIVEWAY
5. CONSTRUCT SIDEWALK
6. CONSTRUCT 2'-2" CURB & GUTTER
7. REMOVE AND REPLACE SIGN
8. PROTECT TREE
9. REMOVE TREE
10. REMOVE AND RESET MAILBOX
11. REMOVE AND RESET WATER METER
12. ADJUST WATER METER TO GRADE
13. ADJUST WATER VALVE TO GRADE
14. CONSTRUCT TYPE "A" ADA RAMP
15. TO BE RELOCATED BY OTHERS
16. TO BE PROTECTED
17. TIE ROOF DRAIN TO PAVEMENT EDGE DRAIN
18. CONSTRUCT FALLAWAY CURB & GUTTER
19. FULL DEPTH PCC RECONSTRUCTION . 4

BENCHMARK
BM-20023
PK NAIL SET
N=421984.48
E=2604280.30
EL=663.74

OKIE 811
Know what's below. Call before you dig.

LICENSED PROFESSIONAL ENGINEER
BENJAMIN W. FLETCHER
24921
OKLAHOMA
8/7/2020

ROADWAY PLAN & PROFILE
S. 117TH E. AVE.

PROJECT #144628-W, TMUA-W 18-16

MAINTENANCE ZONE 6028-W
TUPELO CREEK DRAINAGE

CITY OF TULSA, OKLAHOMA
ENGINEERING SERVICES DEPARTMENT

PLANS AND ESTIMATES PREPARED BY:
Meshek & Associates, L.L.C.
1437 S. Boulder Avenue, Suite 1550 Tulsa, OK 74119 (918)392-5620

REVISION	BY	DATE

PLAN SCALE	DRAWN	SCB	08/20
1" = 20'	DESIGNED	BWF	08/20
	SURVEY	AB	08/18
PROFILE SCALE	PROJ. MGR.		
HORIZONTAL: 1" = 20'	LEAD ENGR.		
	FIELD MGR.		
VERTICAL: 1" = 5'	RECOMMENDED DESIGN MANAGER		
FILE:	DRAWING:		
ATLAS PAGE NO. 235			

APPROVED:

CITY ENGINEER
DATE:
SHEET 73 OF 161 SHEETS

PRINT DATE: 08/07/2020 M:\City_of_Tulsa\18TUL02_MZ6028_Tupelo_Creek_Drainage\Design\Drawings\18TUL02_PNP_S_117TH_E_AVE_NORTH.dwg

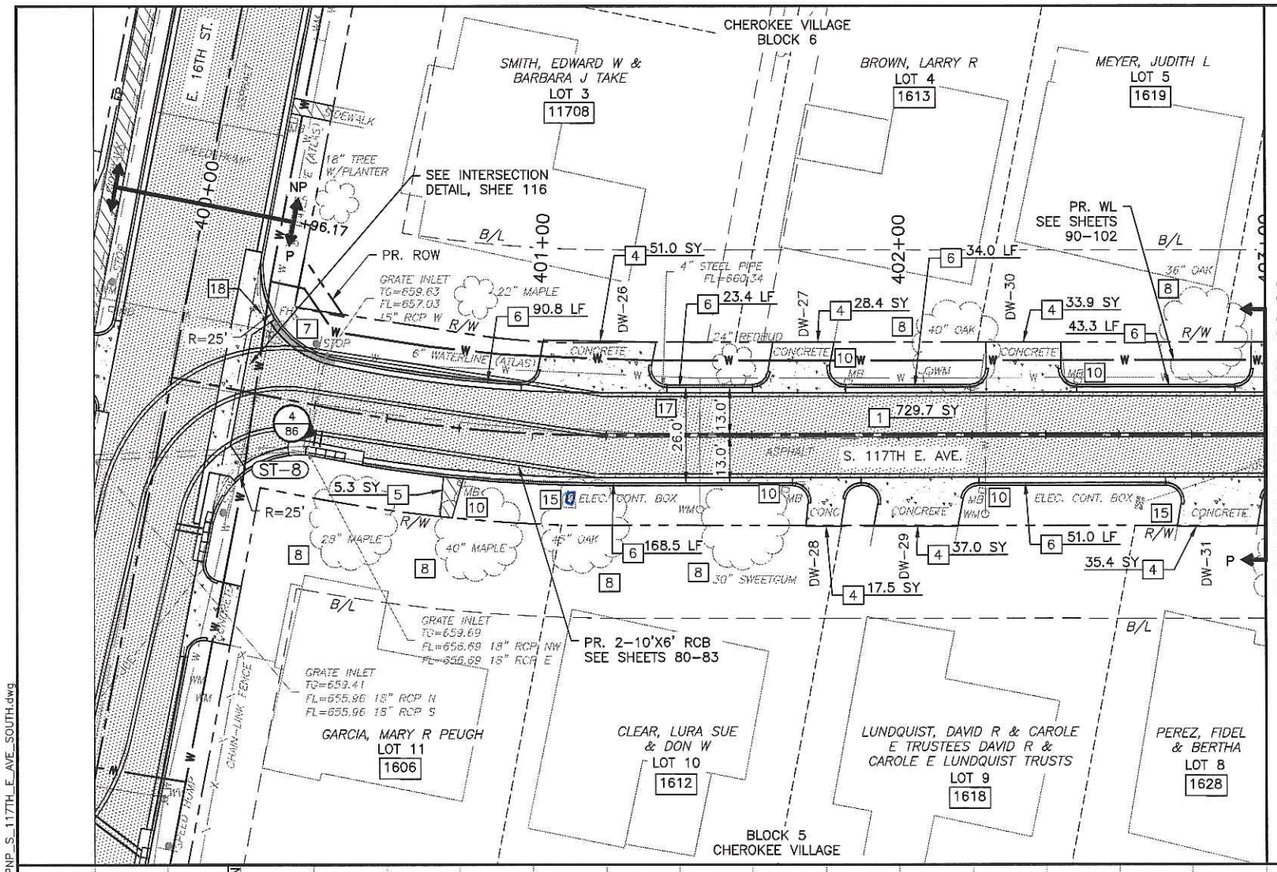

CAUTION
NATURAL GAS
UNDERGROUND ELECTRIC
WATERLINE

0 10 20 40
SCALE IN FEET

NP
+XX.XX
P

NP NON-PARTICIPATING
P PARTICIPATING
+XX.XX STATION CALLOUT

CONSTRUCTION NOTES:

1. FULL DEPTH AC RECONSTRUCTION
2. 2" MILL AND OVERLAY
3. TYPE 1 AC PATCH
4. CONSTRUCT CONCRETE DRIVEWAY
5. CONSTRUCT SIDEWALK
6. CONSTRUCT 2'-2" CURB & GUTTER
7. REMOVE AND REPLACE SIGN
8. PROTECT TREE
9. REMOVE TREE
10. REMOVE AND RESET MAILBOX
11. REMOVE AND RESET WATER METER
12. ADJUST WATER METER TO GRADE
13. ADJUST WATER VALVE TO GRADE
14. CONSTRUCT TYPE "A" ADA RAMP
15. TO BE RELOCATED BY OTHERS
16. TO BE PROTECTED
17. TIE ROOF DRAIN TO PAVEMENT EDGE DRAIN
18. CONSTRUCT FALLAWAY CURB & GUTTER
19. FULL DEPTH PCC RECONSTRUCTION . 4

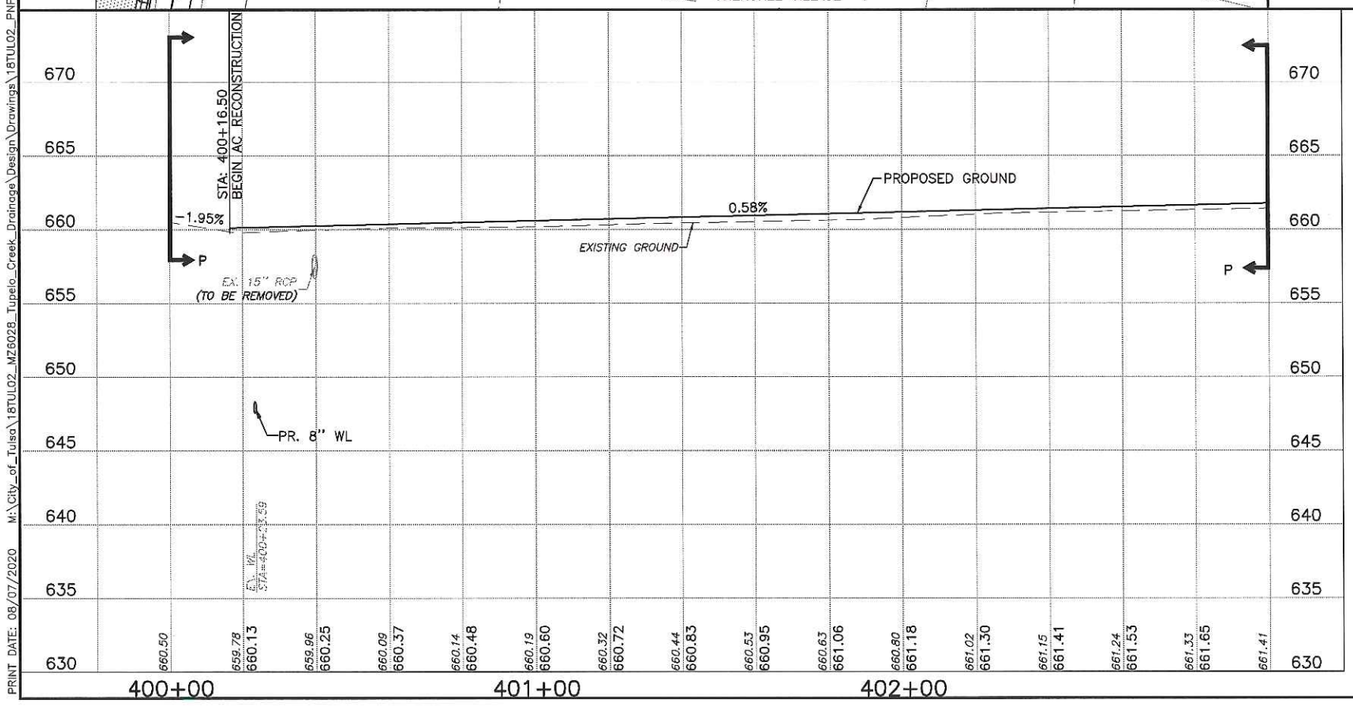

BENCHMARK
BM-20021
CHISELED "X" SET
N=421819.77
E=2604098.25
EL=660.44

OKIE 811
Know what's below. Call before you dig.

LICENSED PROFESSIONAL ENGINEER
BENJAMIN W. FLETCHER
24921
OKLAHOMA

8/7/2020

ROADWAY PLAN & PROFILE
S. 117TH E. AVE.

PROJECT #144628-W, TMUA-W 18-16

MAINTENANCE ZONE 6028-W
TUPELO CREEK DRAINAGE

CITY OF TULSA, OKLAHOMA
ENGINEERING SERVICES DEPARTMENT

PLANS AND ESTIMATES PREPARED BY:
Meshek & Associates, L.L.C.
1437 S. Boulder Avenue, Suite 1550 Tulsa, OK 74119 (918)392-5620

REVISION	BY	DATE

PLAN SCALE	DRAWN	SCB	08/20
1" = 20'	DESIGNED	BWF	08/20
	SURVEY	AB	08/18
PROFILE SCALE	PROJ. MGR.		
HORIZONTAL: 1" = 20'	LEAD ENGR.		
	FIELD MGR.		
VERTICAL: 1" = 5'	RECOMMENDED		
	DESIGN MANAGER		
FILE:	DRAWING:		
ATLAS PAGE NO. 235			

APPROVED:

CITY ENGINEER
DATE:
SHEET 74 OF 161 SHEETS

PRINT DATE: 08/07/2020 M:\City_of_Tulsa\18TUL02_MZ6028_Tupelo_Creek_Drainage\Design\Drawings\18TUL02_PNP_S_117TH_E_AVE_SOUTH.dwg

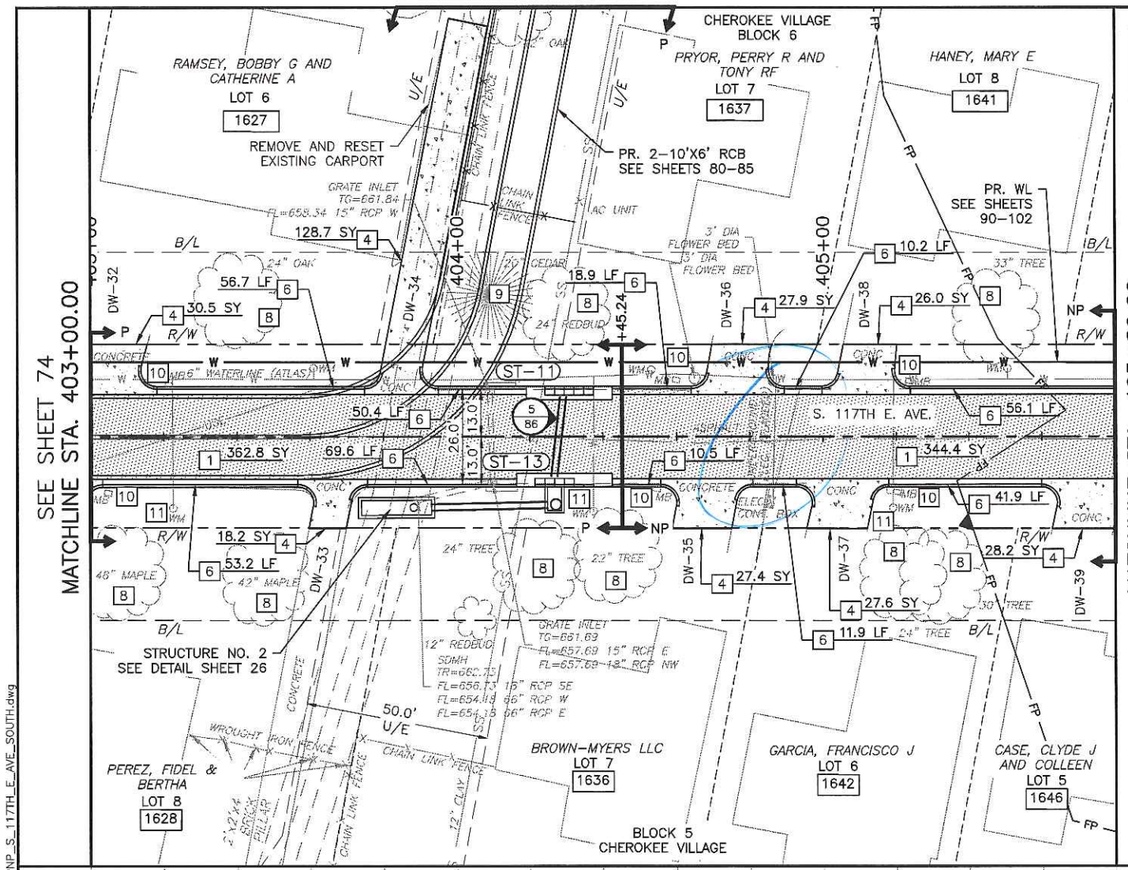

CAUTION
SANITARY SEWER
UNDERGROUND ELECTRIC
WATERLINE

SCALE IN FEET: 0 10 20 40

NP +XX.XX P

NP NON-PARTICIPATING
P PARTICIPATING
+XX.XX STATION CALLOUT

CONSTRUCTION NOTES:

1. FULL DEPTH AC RECONSTRUCTION
2. 2" MILL AND OVERLAY
3. TYPE 1 AC PATCH
4. CONSTRUCT CONCRETE DRIVEWAY
5. CONSTRUCT SIDEWALK
6. CONSTRUCT 2'-2" CURB & GUTTER
7. REMOVE AND REPLACE SIGN
8. PROTECT TREE
9. REMOVE TREE
10. REMOVE AND RESET MAILBOX
11. REMOVE AND RESET WATER METER
12. ADJUST WATER METER TO GRADE
13. ADJUST WATER VALVE TO GRADE
14. CONSTRUCT TYPE "A" ADA RAMP
15. TO BE RELOCATED BY OTHERS
16. TO BE PROTECTED
17. TIE ROOF DRAIN TO PAVEMENT EDGE DRAIN
18. CONSTRUCT FALLAWAY CURB & GUTTER
19. FULL DEPTH PCC RECONSTRUCTION 4

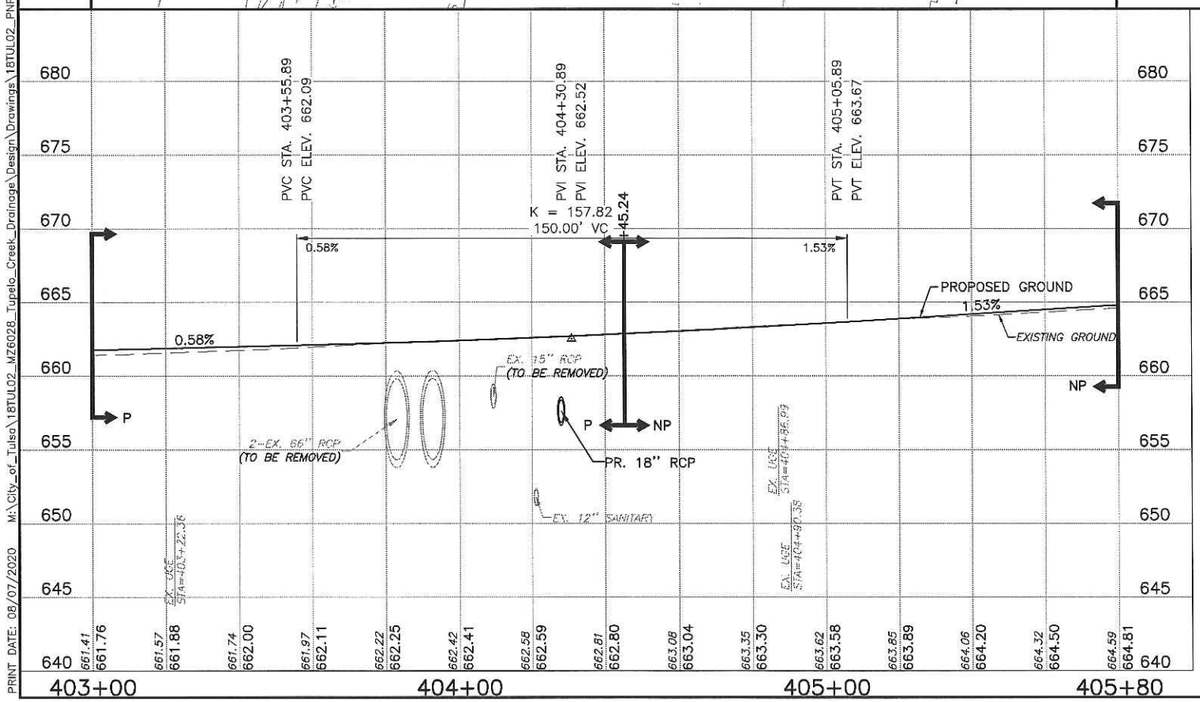

OKIE811 Know what's below. Call before you dig.

LICENSED PROFESSIONAL ENGINEER
BENJAMIN W. FLETCHER
24921
OKLAHOMA

8/7/2020

ROADWAY PLAN & PROFILE
S. 117TH E. AVE.

PROJECT #144628-W, TMUA-W 18-16

MAINTENANCE ZONE 6028-W
TUPELO CREEK DRAINAGE

CITY OF TULSA, OKLAHOMA
ENGINEERING SERVICES DEPARTMENT

PLANS AND ESTIMATES PREPARED BY:
Meshek & Associates, L.L.C.
1437 S. Boulder Avenue, Suite 1550 Tulsa, OK 74119 (918)392-5620

REVISION	BY	DATE

PLAN SCALE 1" = 20'	DRAWN	SCB	08/20
	DESIGNED	BWF	08/20
	SURVEY	AB	08/18
PROFILE SCALE	PROJ. MGR.		
HORIZONTAL: 1" = 20'	LEAD ENGR.		
	FIELD MGR.		
VERTICAL: 1" = 5'	RECOMMENDED DESIGN MANAGER		
FILE:	DRAWING:		
ATLAS PAGE NO. 235			

APPROVED:

CITY ENGINEER

DATE:

SHEET 75 OF 161 SHEETS

PRINT DATE: 08/07/2020 M:\City_of_Tulsa\18TUL02_MZ6028_Tupelo_Creek_Drainage\Design\Drawings\18TUL02_PNP_S_117TH_E_AVE_SOUTH.dwg

CAUTION
NATURAL GAS
UNDERGROUND ELECTRIC
SANITARY SEWER
WATERLINE

CHEROKEE VILLAGE
BLOCK 6

SEE SHEET 75
MATCHLINE STA. 405+80.00

SEE SHEET 77
MATCHLINE STA. 410+20.00

CASE, CLYDE J AND COLLEEN
LOT 5
1646

PADILLA, SONIA MARTINEZ
LOT 9
11715

AGUIRRE, NOE VEGA
LOT 10
1648

MILLARR, PATRICIA RUTH
LOT 7
1647

OAK CREEK PROPERTIES LLC
LOT 4
1650

H & C INVESTMENT PROPERTIES LLC
LOT 8
1651

FLORES, ERICA
LOT 3
11704

WALKER, JENNIFER
LOT 2
11708

RUSSELL, LILAH F TRUSTEE
LILAH F RUSSELL REV TRUST
LOT 1
11714

GEARHART, STEVEN M & JUSTINE D
LOT 11
11726

KING & KING PROPERTIES LLC
LOT 10
11730

GARICA-OLMOS, JESUS & MAYRA G
LOT 9
1661

BLOCK 5
CHEROKEE VILLAGE

BLOCK 7
CHEROKEE VILLAGE

E. 17TH PL.
S. 117TH E. AVE.
E. 17TH PL / S. 117TH E. AVE.
E. 16TH PL / S. 117TH E. AVE.
E. 16TH PL / S. 118TH E. AVE.

BM-20020
BM-503

SEE INTERSECTION DETAIL, SHEET 118

PR. WL SEE SHEETS 90-102

PR. CONCRETE VALLEY GUTTER SEE SHEET 19 DETAIL 4

6" WATERLINE (ATLAS)

4" CPP FL=660.95

WHIT BRX ALARM

406+00 407+00 408+00 409+00 410+00

DW-40 DW-41 DW-42 DW-43 DW-44 DW-45 DW-46 DW-47 DW-48 DW-49

34.9 SY 27.8 SY 4.9 LF 45.8 LF 68.6 LF 30.0 SY 50.2 LF 32.9 SY 81.9 LF 47.6 SY 161.6 LF 24.6 SY 115.8 LF 1969.1 SY 83.8 SY 143.5 LF 3.9 SY 28.4 SY 31.5 LF 26.4 SY 16.1 LF 28.5 SY 63.1 LF 31.3 SY 4.3 LF

PVC STA. 406+65.18
PVC ELEV. 666.11
PVI STA. 407+40.18
PVI ELEV. 667.26
PVT STA. 408+15.18
PVT ELEV. 666.79
K = 69.32
150.00' VC
1.53%
-0.63%
0.63%
HI POINT
STA:407+71.39
ELEV:666.93
PROPOSED GROUND
EXISTING GROUND
PR. 6" DIP WL
NP

680 675 670 665 660 655 650 645 640

664.59 664.98 665.12 665.32 665.42 665.72 665.73 666.03 666.03 666.32 666.33 666.70 666.56 666.97 666.74 667.17 666.86 667.36 666.92 667.13 666.92 667.02 666.87 666.95 666.76 666.87 666.63 666.76 666.51 666.68 666.38 666.51 666.25 666.04 666.13 665.82 666.00 665.93 665.87 666.01 665.75 665.80 665.62 665.55

406+00 407+00 408+00 409+00 410+00

MOVE WATER TO PROTECT Box

0 10 20 40
SCALE IN FEET

NP NON-PARTICIPATING
P PARTICIPATING
+XX.XX STATION CALLOUT

CONSTRUCTION NOTES:

1 FULL DEPTH AC RECONSTRUCTION
2 2" MILL AND OVERLAY
3 TYPE 1 AC PATCH
4 CONSTRUCT CONCRETE DRIVEWAY
5 CONSTRUCT SIDEWALK
6 CONSTRUCT 2'-2" CURB & GUTTER
7 REMOVE AND REPLACE SIGN
8 PROTECT TREE
9 REMOVE TREE
10 REMOVE AND RESET MAILBOX
11 REMOVE AND RESET WATER METER
12 ADJUST WATER METER TO GRADE
13 ADJUST WATER VALVE TO GRADE
14 CONSTRUCT TYPE "A" ADA RAMP
15 TO BE RELOCATED BY OTHERS
16 TO BE PROTECTED
17 TIE ROOF DRAIN TO PAVEMENT EDGE DRAIN
18 CONSTRUCT FALLAWAY CURB & GUTTER
19 FULL DEPTH PCC RECONSTRUCTION

BENCHMARK
BM-20020
PK NAIL SET
N=421139.06
E=2604240.39
EL=666.65

BENCHMARK
BM-503
CHISELED "X" SET
N=421129.1260'
E=2604508.1310'
EL=666.88

LICENSED PROFESSIONAL ENGINEER
BENJAMIN W. FLETCHER
24921
OKLAHOMA
8/7/2020

OKIE 811
Know what's below. Call before you dig.

ROADWAY PLAN & PROFILE
E. 17TH PL.

PROJECT #144628-W, TMUA-W 18-16

MAINTENANCE ZONE 6028-W
TUPELO CREEK DRAINAGE

CITY OF TULSA, OKLAHOMA
ENGINEERING SERVICES DEPARTMENT

PLANS AND ESTIMATES PREPARED BY:
Meshek & Associates, L.L.C.
1437 S. Boulder Avenue, Suite 1550 Tulsa, OK 74119 (918)392-5620

REVISION	BY	DATE

PLAN SCALE	DRAWN	SCB	08/20
1" = 20'	DESIGNED	BWF	08/20
	SURVEY	AB	08/18
PROFILE SCALE	PROJ. MGR.		
HORIZONTAL: 1" = 20'	LEAD ENGR.		
	FIELD MGR.		
VERTICAL: 1" = 5'	RECOMMENDED		
	DESIGN MANAGER		
FILE:	DRAWING:		
ATLAS PAGE NO. 235			

APPROVED:

CITY ENGINEER
DATE:
SHEET 76 OF 161 SHEETS

PRINT DATE: 08/07/2020 M:\City_of_Tulsa\18TUL02_MZ6028_Tupelo_Creek_Drainage\Design\Drawings\18TUL02_PNP_S_117TH_E_AVE_SOUTH.dwg

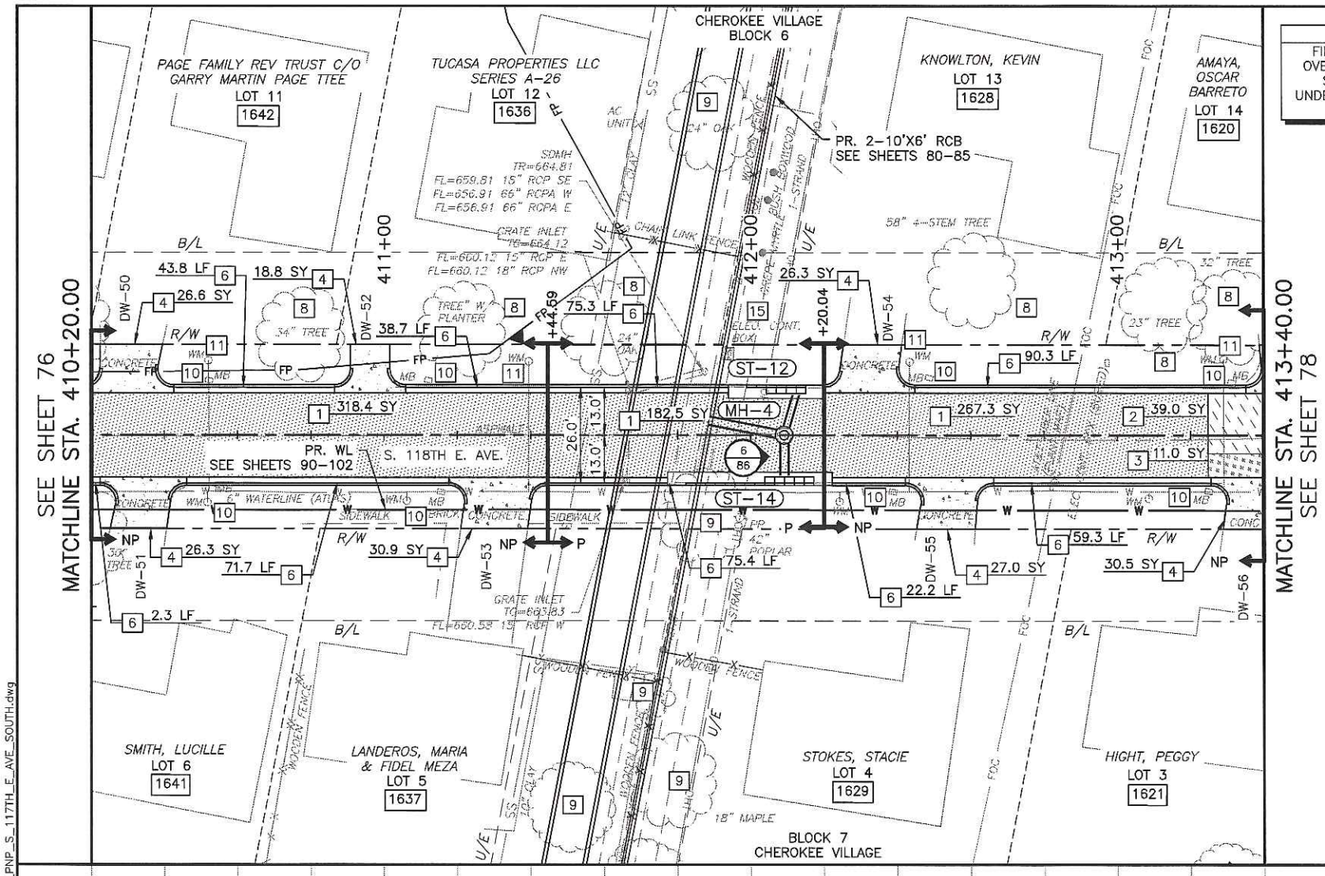

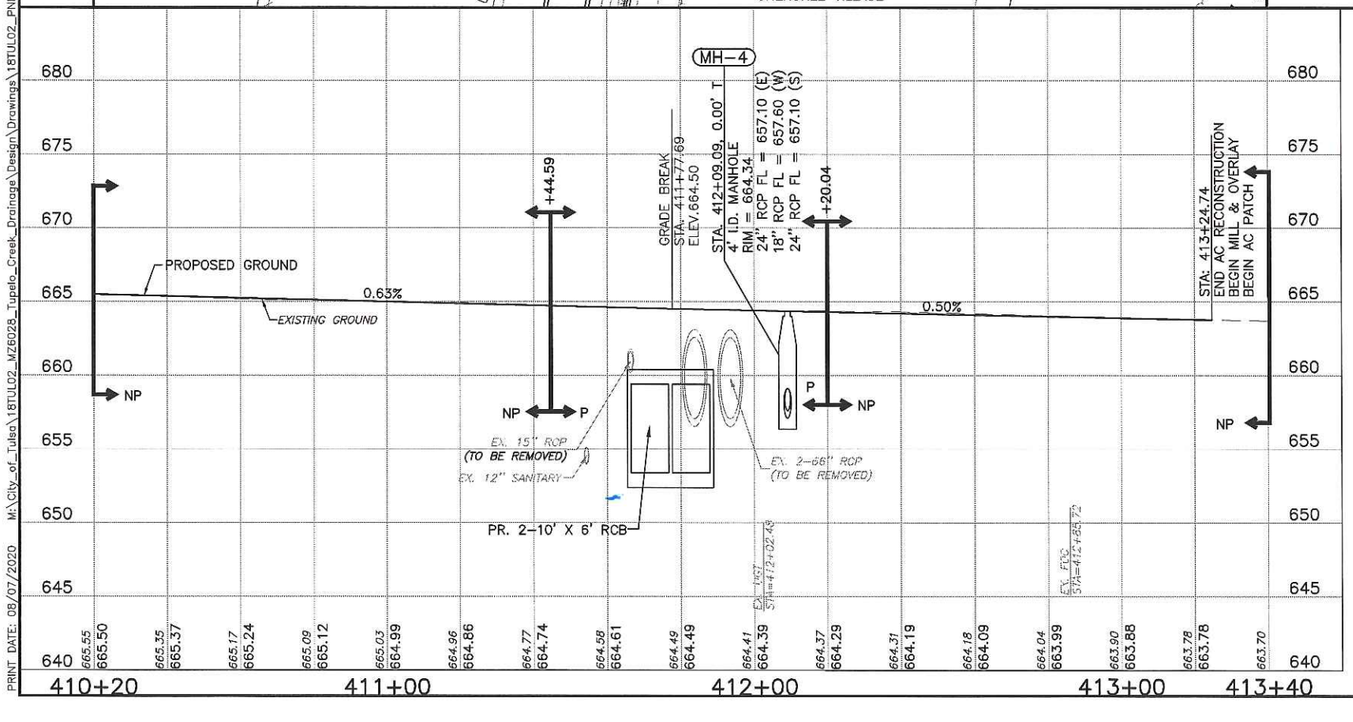

CAUTION
FIBER OPTIC CABLE
OVERHEAD TELEPHONE
SANITARY SEWER
UNDERGROUND ELECTRIC
WATERLINE

0 10 20 40
SCALE IN FEET

NP +XX.XX P
+XX.XX

NP NON-PARTICIPATING
P PARTICIPATING
STATION CALLOUT

CONSTRUCTION NOTES:

1. FULL DEPTH AC RECONSTRUCTION
2. 2" MILL AND OVERLAY
3. TYPE 1 AC PATCH
4. CONSTRUCT CONCRETE DRIVEWAY
5. CONSTRUCT SIDEWALK
6. CONSTRUCT 2'-2" CURB & GUTTER
7. REMOVE AND REPLACE SIGN
8. PROTECT TREE
9. REMOVE TREE
10. REMOVE AND RESET MAILBOX
11. REMOVE AND RESET WATER METER
12. ADJUST WATER METER TO GRADE
13. ADJUST WATER VALVE TO GRADE
14. CONSTRUCT TYPE "A" ADA RAMP
15. TO BE RELOCATED BY OTHERS
16. TO BE PROTECTED
17. TIE ROOF DRAIN TO PAVEMENT EDGE DRAIN
18. CONSTRUCT FALLAWAY CURB & GUTTER
19. FULL DEPTH PCC RECONSTRUCTION 4

BENCHMARK
BM-20024
CHISELED "X" SET
N=421813.68
E=2604424.73
EL=662.42

OKIE 811
Know what's below. Call before you dig.

BENJAMIN W. FLETCHER
REGISTERED PROFESSIONAL ENGINEER
24921
OKLAHOMA

8/7/2020

ROADWAY PLAN & PROFILE
S. 118TH E. AVE.

PROJECT #144628-W, TMUA-W 18-16

MAINTENANCE ZONE 6028-W
TUPELO CREEK DRAINAGE

CITY OF TULSA, OKLAHOMA
ENGINEERING SERVICES DEPARTMENT

PLANS AND ESTIMATES PREPARED BY:
Meshek & Associates, L.L.C.
1437 S. Boulder Avenue, Suite 1550 Tulsa, OK 74119 (918)392-5820

REVISION	BY	DATE

PLAN SCALE	DRAWN	SCB	08/20
1" = 20'	DESIGNED	BWF	08/20
	SURVEY	AB	08/18
PROFILE SCALE	PROJ. MGR.		
HORIZONTAL: 1" = 20'	LEAD ENGR.		
	FIELD MGR.		
VERTICAL: 1" = 5'	RECOMMENDED DESIGN MANAGER		
FILE:	DRAWING:		
ATLAS PAGE NO. 235			

APPROVED:
CITY ENGINEER
DATE:
SHEET 77 OF 161 SHEETS

PRINT DATE: 08/07/2020 M:\City_of_Tulsa\18TUL02_WZ6028_Tupelo_Creek_Drainage\Design\Drawings\18TUL02_PNP_S_117TH_E_AVE_SOUTH.dwg

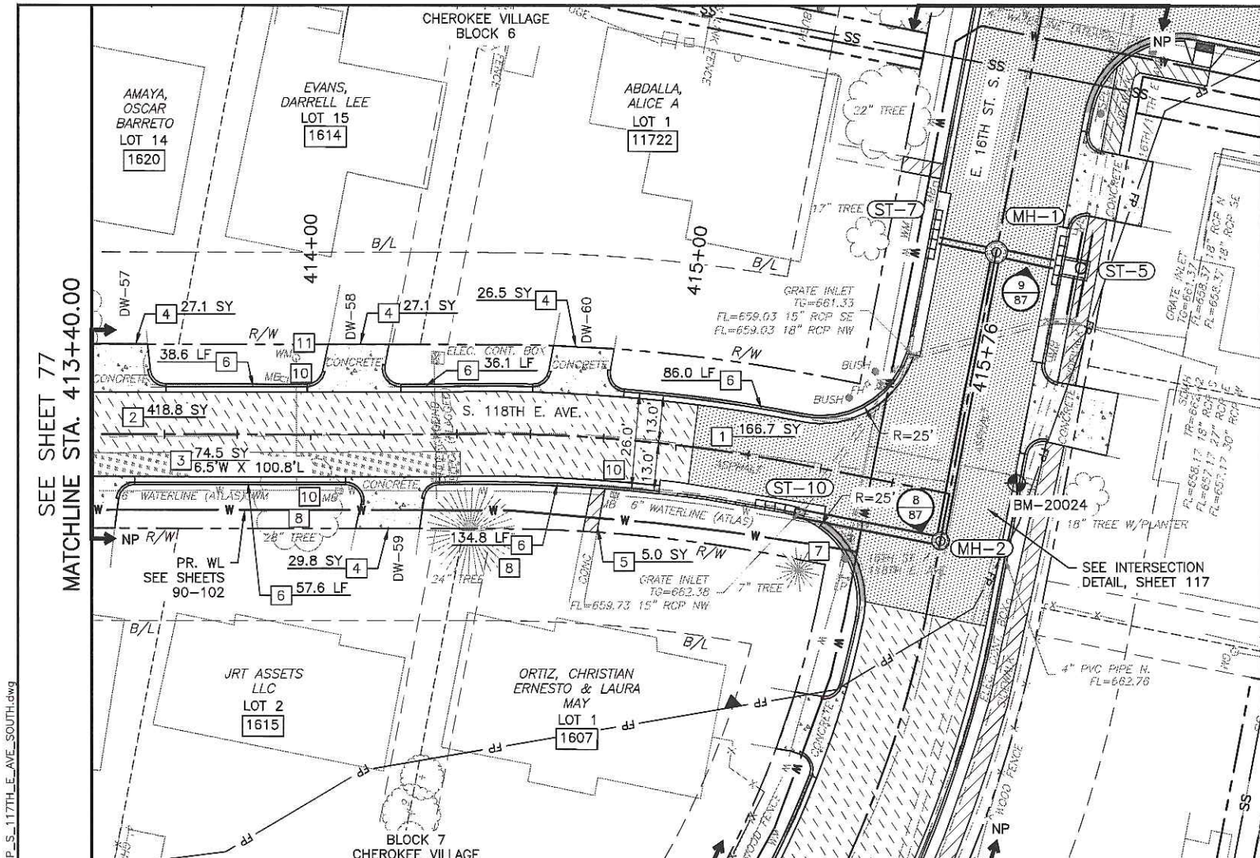

CAUTION
NATURAL GAS
UNDERGROUND ELECTRIC
SANITARY SEWER
WATERLINE

SCALE IN FEET: 0 10 20 40

NP +XX.XX P

NP NON-PARTICIPATING
P PARTICIPATING
+XX.XX STATION CALLOUT

CONSTRUCTION NOTES:

1. FULL DEPTH AC RECONSTRUCTION
2. 2" MILL AND OVERLAY
3. TYPE 1 AC PATCH
4. CONSTRUCT CONCRETE DRIVEWAY
5. CONSTRUCT SIDEWALK
6. CONSTRUCT 2'-2" CURB & GUTTER
7. REMOVE AND REPLACE SIGN
8. PROTECT TREE
9. REMOVE TREE
10. REMOVE AND RESET MAILBOX
11. REMOVE AND RESET WATER METER
12. ADJUST WATER METER TO GRADE
13. ADJUST WATER VALVE TO GRADE
14. CONSTRUCT TYPE "A" ADA RAMP
15. TO BE RELOCATED BY OTHERS
16. TO BE PROTECTED
17. TIE ROOF DRAIN TO PAVEMENT EDGE DRAIN
18. CONSTRUCT FALLAWAY CURB & GUTTER
19. FULL DEPTH PCC RECONSTRUCTION

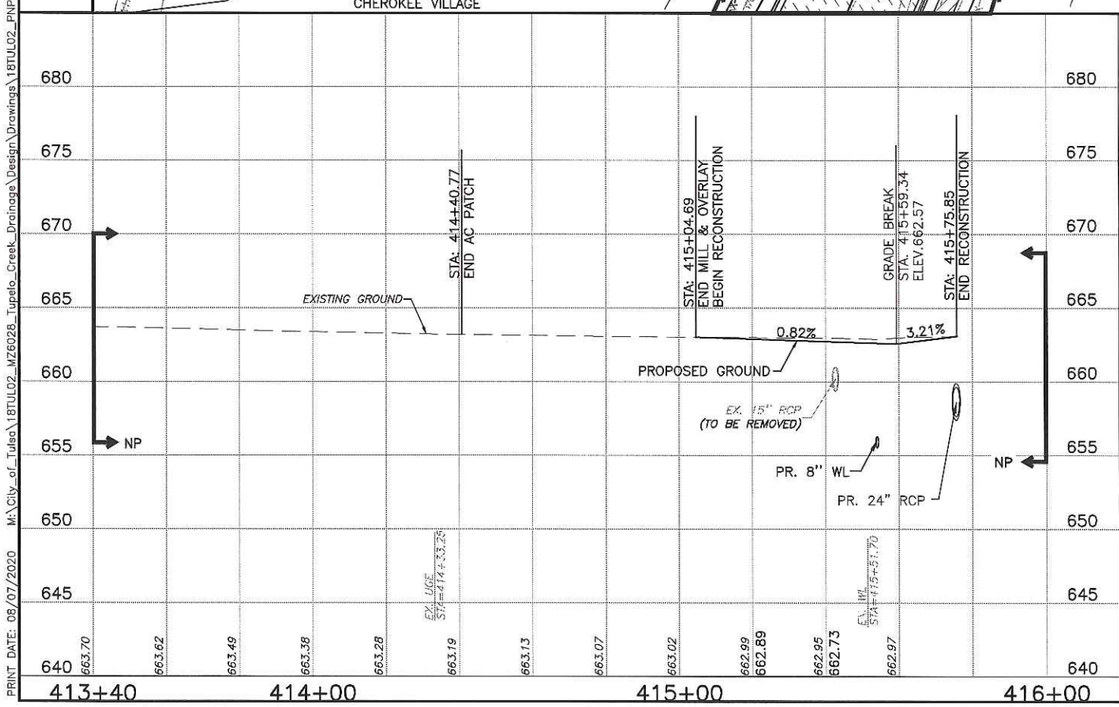

BENCHMARK
BM-20024
CHISELED "X" SET
N=421813.68
E=2604424.73
EL=662.42

OKIE 811

LICENSED PROFESSIONAL ENGINEER
BENJAMIN W. FLETCHER
24921
OKLAHOMA
8/7/2020

ROADWAY PLAN & PROFILE
S. 118TH E. AVE.

PROJECT #144628-W, TMUA-W 18-16

MAINTENANCE ZONE 6028-W
TUPELO CREEK DRAINAGE

CITY OF TULSA, OKLAHOMA
ENGINEERING SERVICES DEPARTMENT

PLANS AND ESTIMATES PREPARED BY:
Meshek & Associates, L.L.C.
1437 S. Boulder Avenue, Suite 1550 Tulsa, OK 74119 (918)392-5620

REVISION	BY	DATE

PLAN SCALE 1" = 20'	DRAWN	SCB	08/20
	DESIGNED	BWF	08/20
	SURVEY	AB	08/18
PROFILE SCALE	PROJ. MGR.		
HORIZONTAL: 1" = 20'	LEAD ENGR.		
	FIELD MGR.		
VERTICAL: 1" = 5'	RECOMMENDED		
	DESIGN MANAGER		
FILE:	DRAWING:		
ATLAS PAGE NO. 235			

APPROVED:
CITY ENGINEER
DATE:
SHEET 78 OF 161 SHEETS

PRINT DATE: 08/07/2020 M:\City_of_Tulsa\18TUL02_MZ6028_Tupelo_Creek_Drainage\Design\Drawings\18TUL02_PNP_S_117TH_E_AVE_SOUTH.dwg

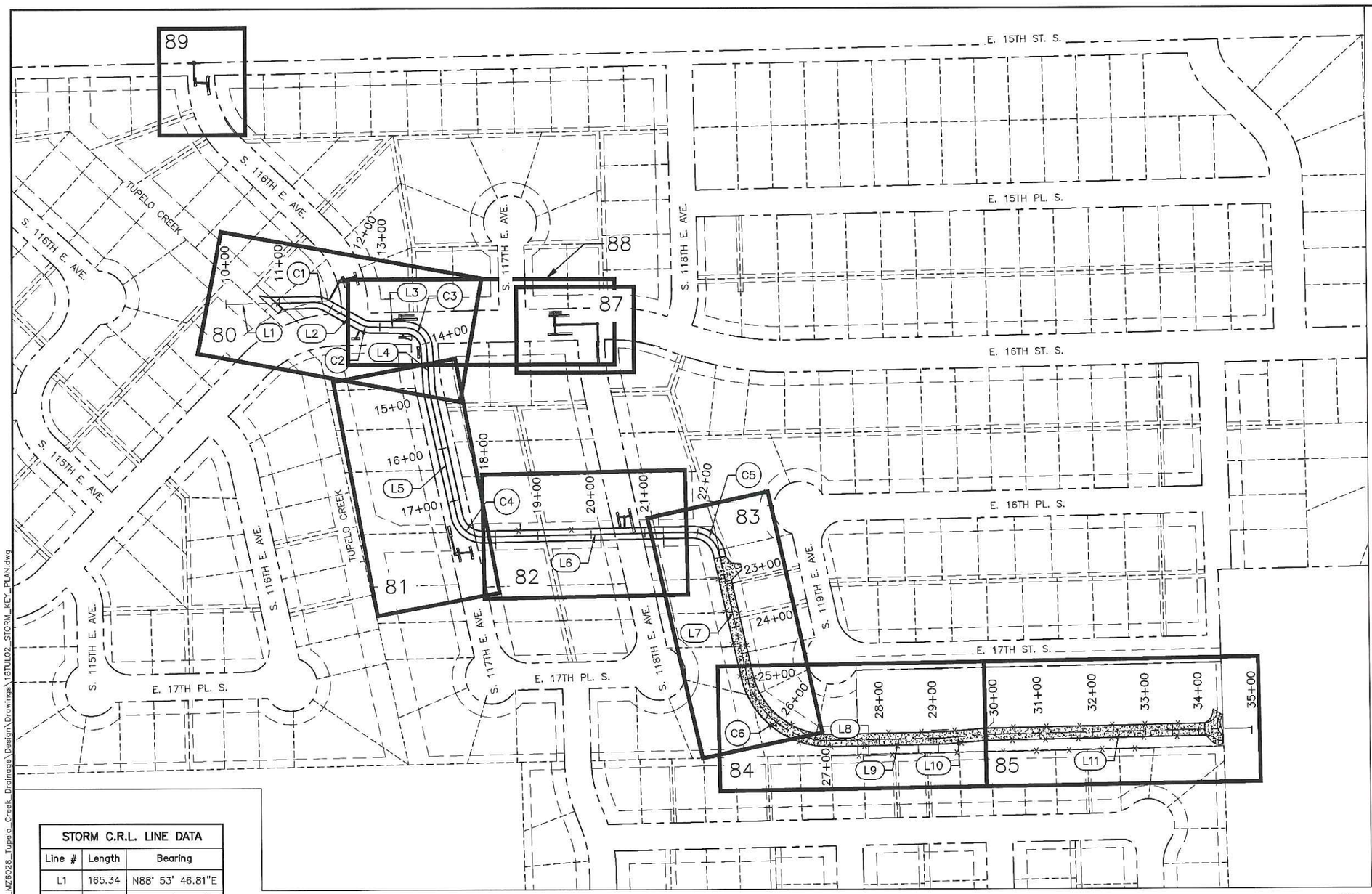

N

0 50 100 200

SCALE IN FEET

LEGEND

STORM SEWER PLAN & PROFILE SHEET NUMBER

STORM C.R.L. LINE DATA		
Line #	Length	Bearing
L1	165.34	N88° 53' 46.81"E
L2	73.85	S61° 06' 13.19"E
L3	63.85	S89° 05' 13.61"E
L4	81.18	S3° 27' 29.53"E
L5	239.16	S12° 11' 27.07"E
L6	392.00	N88° 48' 09.83"E
L7	235.33	S12° 35' 32.37"E
L8	58.39	N89° 23' 18.29"E
L9	162.70	N88° 49' 18.58"E
L10	80.16	N85° 14' 43.78"E
L11	499.14	N88° 49' 18.58"E

STORM C.R.L. CURVE DATA					
Curve #	Arc Length	Radius	Delta Angle	Chord Length	Chord Bearing
C1	23.56	45.00	30°00'00"	23.29	S76° 06' 13.19"E
C2	21.98	45.00	27°59'00"	21.76	S75° 05' 43.40"E
C3	59.77	40.00	85°37'14"	54.37	S46° 16' 36.37"E
C4	68.95	50.00	79°00'23"	63.61	S51° 41' 38.62"E
C5	68.60	50.00	78°36'18"	63.34	S51° 53' 41.27"E
C6	206.04	154.65	76°20'04"	191.14	S50° 42' 59.21"E

OKIE 811 Know what's below. Call before you dig.

LICENSED PROFESSIONAL ENGINEER — BENJAMIN W. FLETCHER — 24921 — OKLAHOMA

8/7/2020

STORM SEWER ALIGNMENT DATA AND STORM SEWER KEY PLAN

PROJECT #144628-W, TMUA-W 18-16

MAINTENANCE ZONE 6028-W
TUPELO CREEK DRAINAGE

CITY OF TULSA, OKLAHOMA
ENGINEERING SERVICES DEPARTMENT

PLANS AND ESTIMATES PREPARED BY:
Meshek & Associates, L.L.C.
1437 S. Boulder Avenue, Suite 1550 Tulsa, OK 74119 (918)392-5620

REVISION	BY	DATE

PLAN SCALE: 1" = 100'
PROFILE SCALE: HORIZONTAL: 1" = 20' VERTICAL: 1" = 5'

DRAWN	SCB	08/20
DESIGNED	BWF	08/20
SURVEY	AB	08/18
PROJ. MGR.		
LEAD ENGR.		
FIELD MGR.		
RECOMMENDED DESIGN MANAGER		

APPROVED:
CITY ENGINEER
DATE:

FILE:
DRAWING:
ATLAS PAGE NO. 235
SHEET 79 OF 161 SHEETS

PRINT DATE: 08/07/2020 M:\City_of_Tulsa\18TUL02_MZ6028_Tupelo_Creek_Drainage\Design\Drawings\18TUL02_STORM_KEY_PLAN.dwg

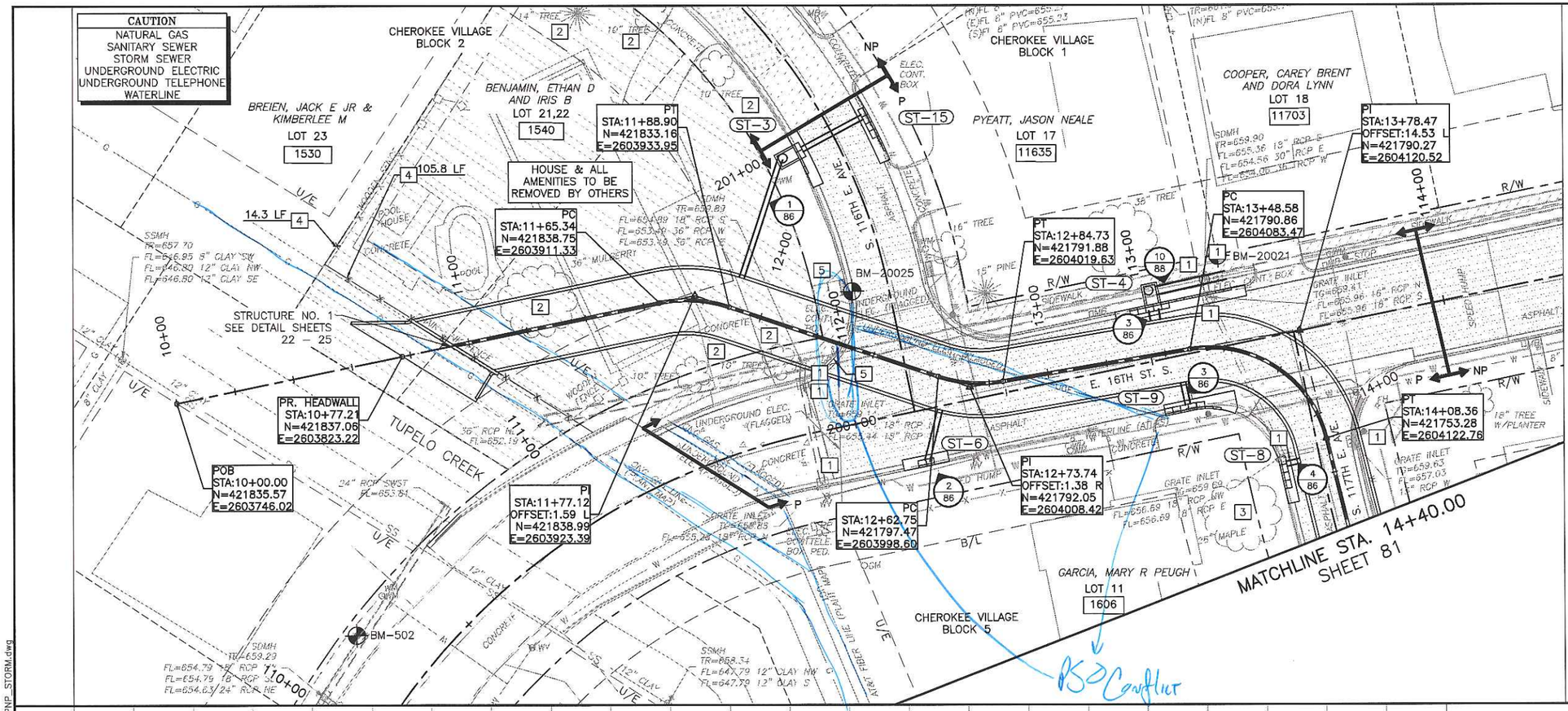

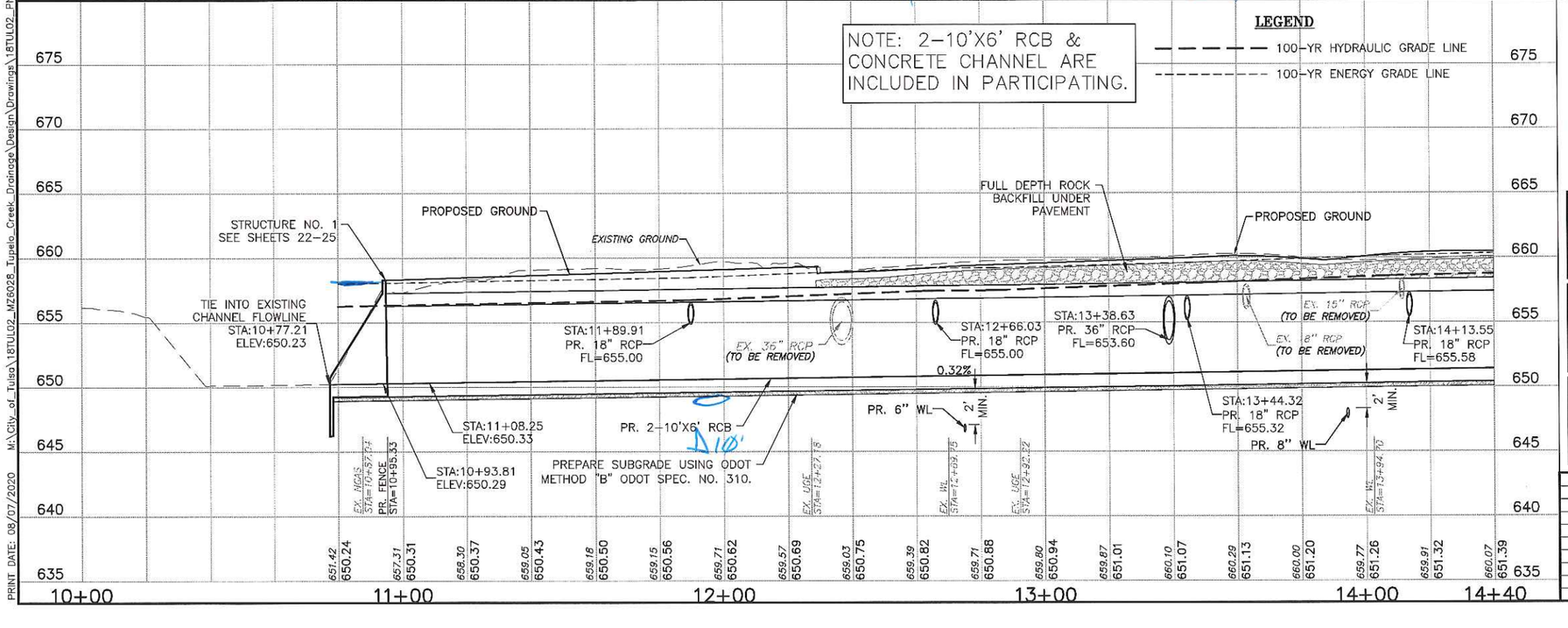

TREE REMOVAL STA. 10+00.00 – STA. 14+40.00

SIZE	TOTAL
6"–12"	5
13"–18"	0
19"–24"	0
25"+	1

REFER TO DEMOLITION SHEETS 55 TO 62 FOR TREE REMOVAL.

BENCHMARK
BM–502
CHISELED "X" SET
N=421748.45
E=2603791.04
EL=659.50

BENCHMARK
BM–20021
CHISELED "X" SET
N=421819.77
E=2604098.25
EL=660.44

BENCHMARK
BM–20025
CHISELED "X" SET
N=421830.06
E=2603975.10
EL=658.98

LICENSED PROFESSIONAL ENGINEER
BENJAMIN W. FLETCHER
24921
OKLAHOMA
8/7/2020

OKIE 811 Know what's below. Call before you dig.

STORM SEWER PLAN & PROFILE

PROJECT #144628–W, TMUA–W 18–16

MAINTENANCE ZONE 6028–W
TUPELO CREEK DRAINAGE

CITY OF TULSA, OKLAHOMA
ENGINEERING SERVICES DEPARTMENT

PLANS AND ESTIMATES PREPARED BY:
Meshek & Associates, L.L.C.
1437 S. Boulder Avenue, Suite 1550 Tulsa, OK 74119 (918)392–5620

REVISION	BY	DATE

PLAN SCALE 1" = 20'	DRAWN	SCB	08/20
	DESIGNED	BWF	08/20
	SURVEY	AB	08/18
PROFILE SCALE	PROJ. MGR.		
HORIZONTAL: 1" = 20'	LEAD ENGR.		
	FIELD MGR.		
VERTICAL: 1" = 5'	RECOMMENDED DESIGN MANAGER		
FILE:	DRAWING:		
ATLAS PAGE NO. 235			

APPROVED:
CITY ENGINEER
DATE:
SHEET 80 OF 161 SHEETS

PRINT DATE: 08/07/2020 M:\City_of_Tulsa\18TUL02_MZ6028_Tupelo_Creek_Drainage\Design\Drawings\18TUL02_PNP_STORM.dwg

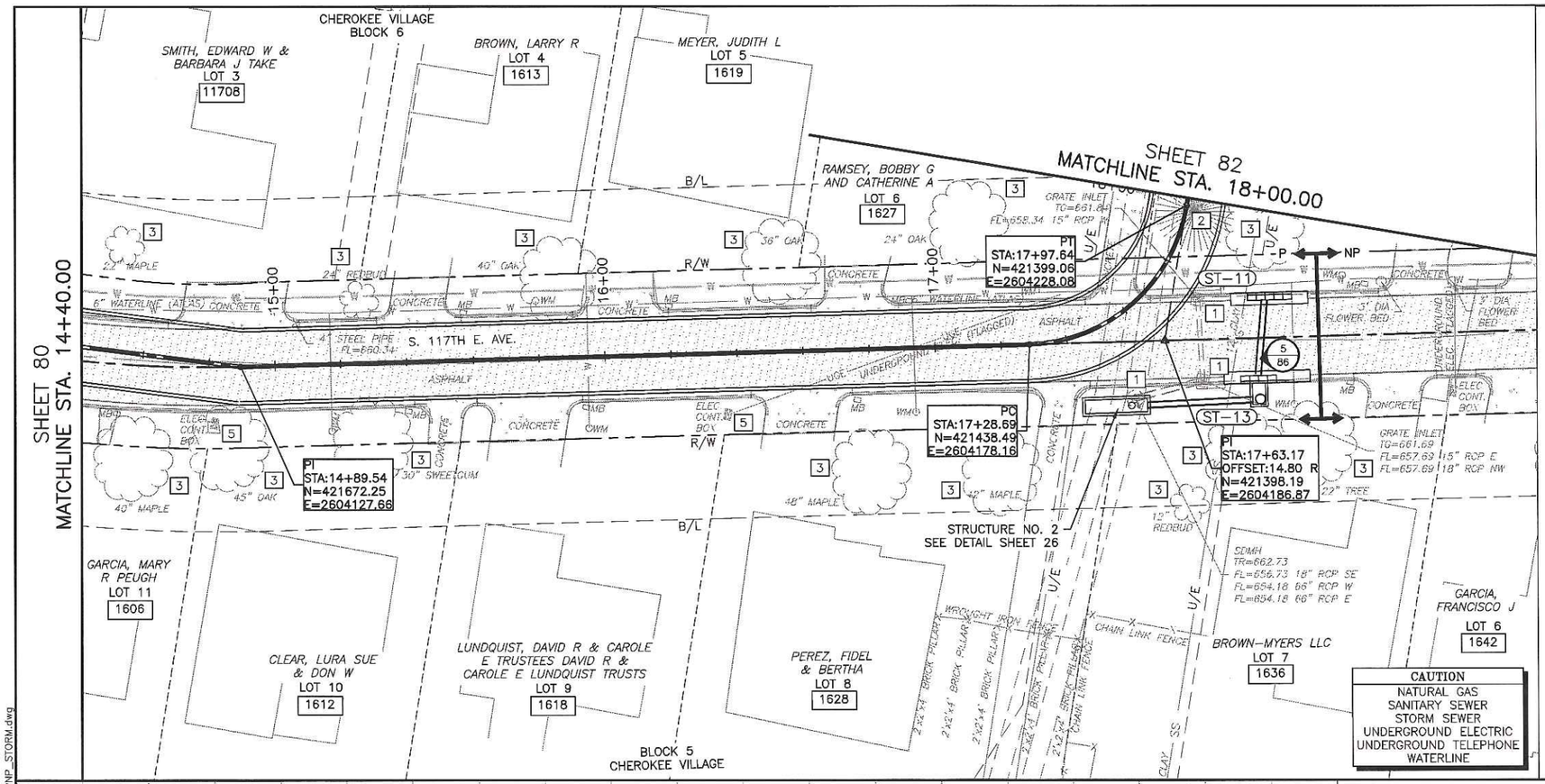

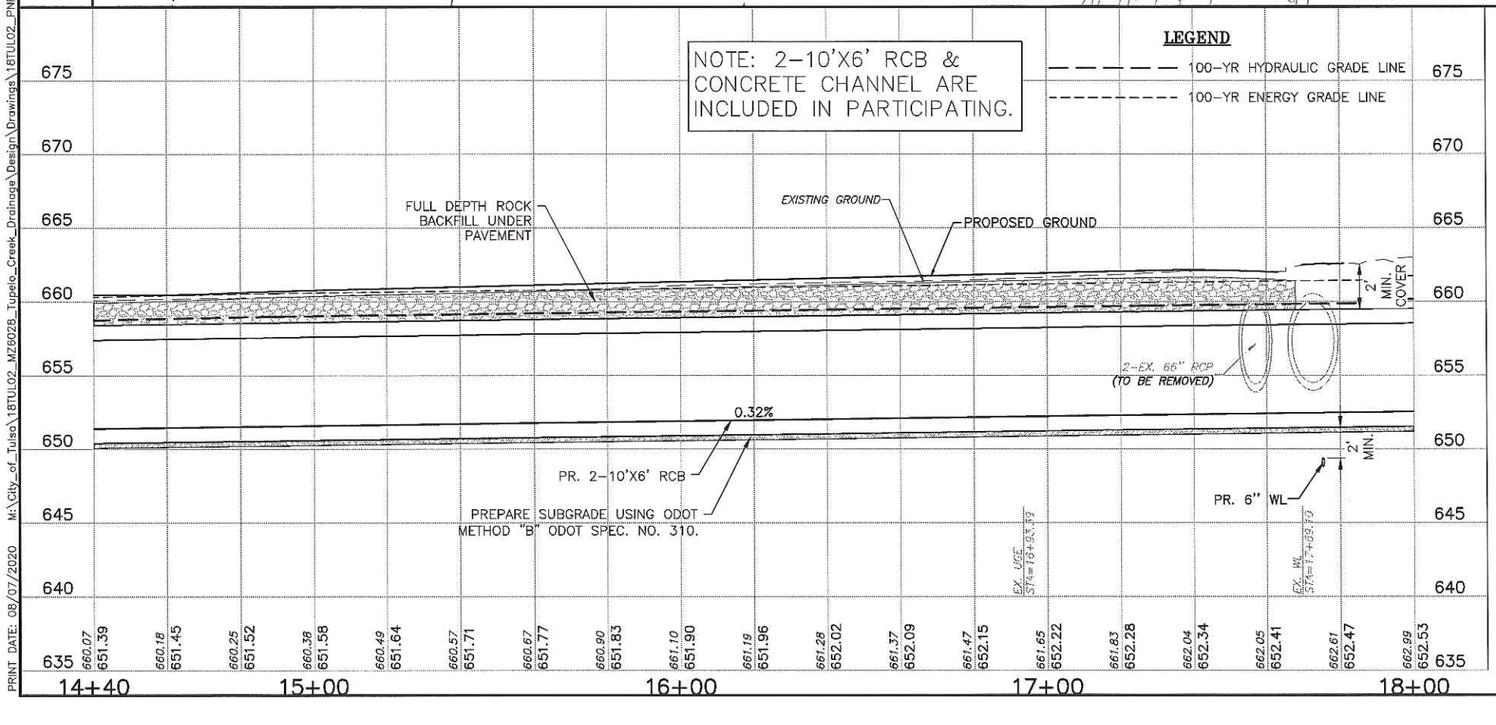

TREE REMOVAL STA. 14+40.00 – STA. 18+00.00

SIZE	TOTAL
6"–12"	0
13"–18"	0
19"–24"	1
25"+	0

REFER TO DEMOLITION SHEETS 55 TO 62 FOR TREE REMOVAL.

OKIE 811 Know what's below. Call before you dig.

LICENSED PROFESSIONAL ENGINEER
BENJAMIN W. FLETCHER
24921
OKLAHOMA
8/7/2020

STORM SEWER PLAN & PROFILE

PROJECT #144628-W, TMUA-W 18-16

MAINTENANCE ZONE 6028-W
TUPELO CREEK DRAINAGE

CITY OF TULSA, OKLAHOMA
ENGINEERING SERVICES DEPARTMENT

PLANS AND ESTIMATES PREPARED BY:
Meshek & Associates, L.L.C.
1437 S. Boulder Avenue, Suite 1550 Tulsa, OK 74119 (918)392-5620

REVISION	BY	DATE

PLAN SCALE 1" = 20'
PROFILE SCALE HORIZONTAL: 1" = 20' VERTICAL: 1" = 5'
FILE:
ATLAS PAGE NO. 235

DRAWN	SCB	08/20
DESIGNED	BWF	08/20
SURVEY	AB	08/18
PROJ. MGR.		
LEAD ENGR.		
FIELD MGR.		
RECOMMENDED		
DESIGN MANAGER		
DRAWING:		

APPROVED:
CITY ENGINEER
DATE:
SHEET 81 OF 161 SHEETS

PRINT DATE: 08/07/2020 M:\City_of_Tulsa\18TUL02_MZ6028_Tupelo_Creek_Drainage\Design\Drawings\18TUL02_PNP_STORM.dwg

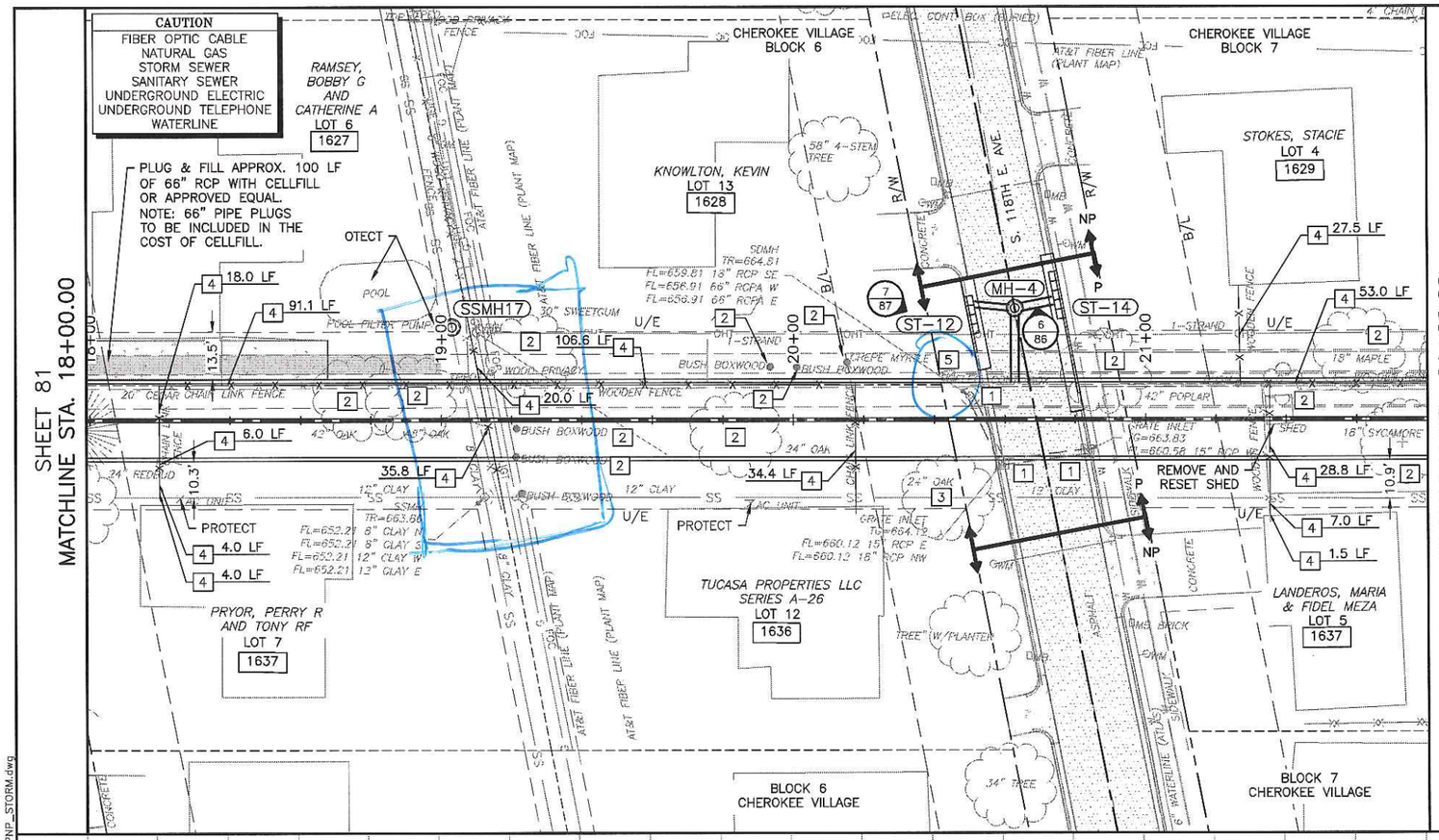

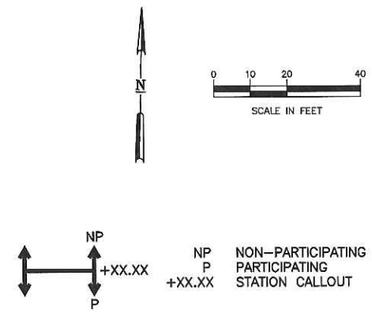

LEGEND:

- FULL DEPTH RECONSTRUCTION
- 2" MILL AND OVERLAY
- TYPE 1 AC PATCH
- CONSTRUCT CONCRETE DRIVEWAY
- CONSTRUCT 2'-2" CURB & GUTTER
- EXISTING RCP TO BE REMOVED
- EXISTING RCP TO BE PLUGGED AND FILLED WITH CELLFILL
- CONCRETE CHANNEL (SEE SHEETS 31-32)

CONSTRUCTION NOTES:

1. REMOVE EXISTING INLET/MANHOLE
2. REMOVE TREE/BUSH
3. PROTECT TREE/BUSH
4. REMOVE AND REPLACE EXISTING FENCE (LIKE-KIND)
5. TO BE RELOCATED BY OTHERS

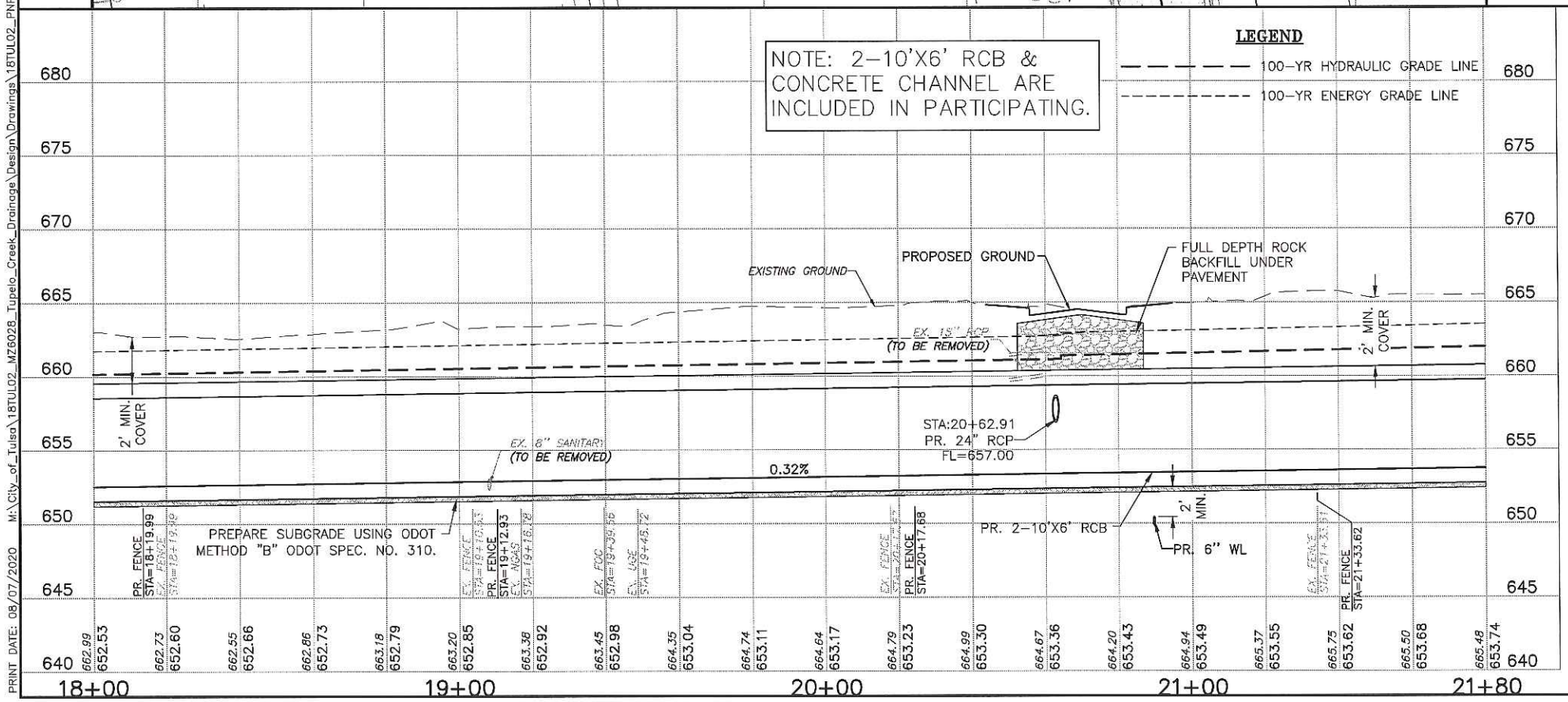

TREE REMOVAL STA. 18+00.00 – STA. 21+80.00	
SIZE	TOTAL
6"–12"	1
13"–18"	2
19"–24"	1
25"+	4

REFER TO DEMOLITION SHEETS 55 TO 62 FOR TREE REMOVAL.

OKIE 811 Know what's below. Call before you dig.

STORM SEWER PLAN & PROFILE

PROJECT #144628-W, TMUA-W 18-16

MAINTENANCE ZONE 6028-W
TUPELO CREEK DRAINAGE

CITY OF TULSA, OKLAHOMA
ENGINEERING SERVICES DEPARTMENT

PLANS AND ESTIMATES PREPARED BY:
Meshek & Associates, L.L.C.
1437 S. Boulder Avenue, Suite 1550 Tulsa, OK 74119 (918)392-5620

LICENSED PROFESSIONAL ENGINEER BENJAMIN W. FLETCHER PE 24921 OKLAHOMA

8/7/2020

REVISION	BY	DATE

PLAN SCALE 1" = 20'	DRAWN	SCB	08/20	APPROVED:
	DESIGNED	BWF	08/20	
	SURVEY	AB	08/18	
PROFILE SCALE	PROJ. MGR.			
HORIZONTAL: 1" = 20'	LEAD ENGR.			
	FIELD MGR.			
VERTICAL: 1" = 5'	RECOMMENDED DESIGN MANAGER			CITY ENGINEER
FILE:	DRAWING:			DATE:
ATLAS PAGE NO. 235				SHEET 82 OF 161 SHEETS

PRINT DATE: 08/07/2020 M:\City_of_Tulsa\18TUL02_MZ6028_Tupelo_Creek_Drainage\Design\Drawings\18TUL02_PNP_STORM.dwg

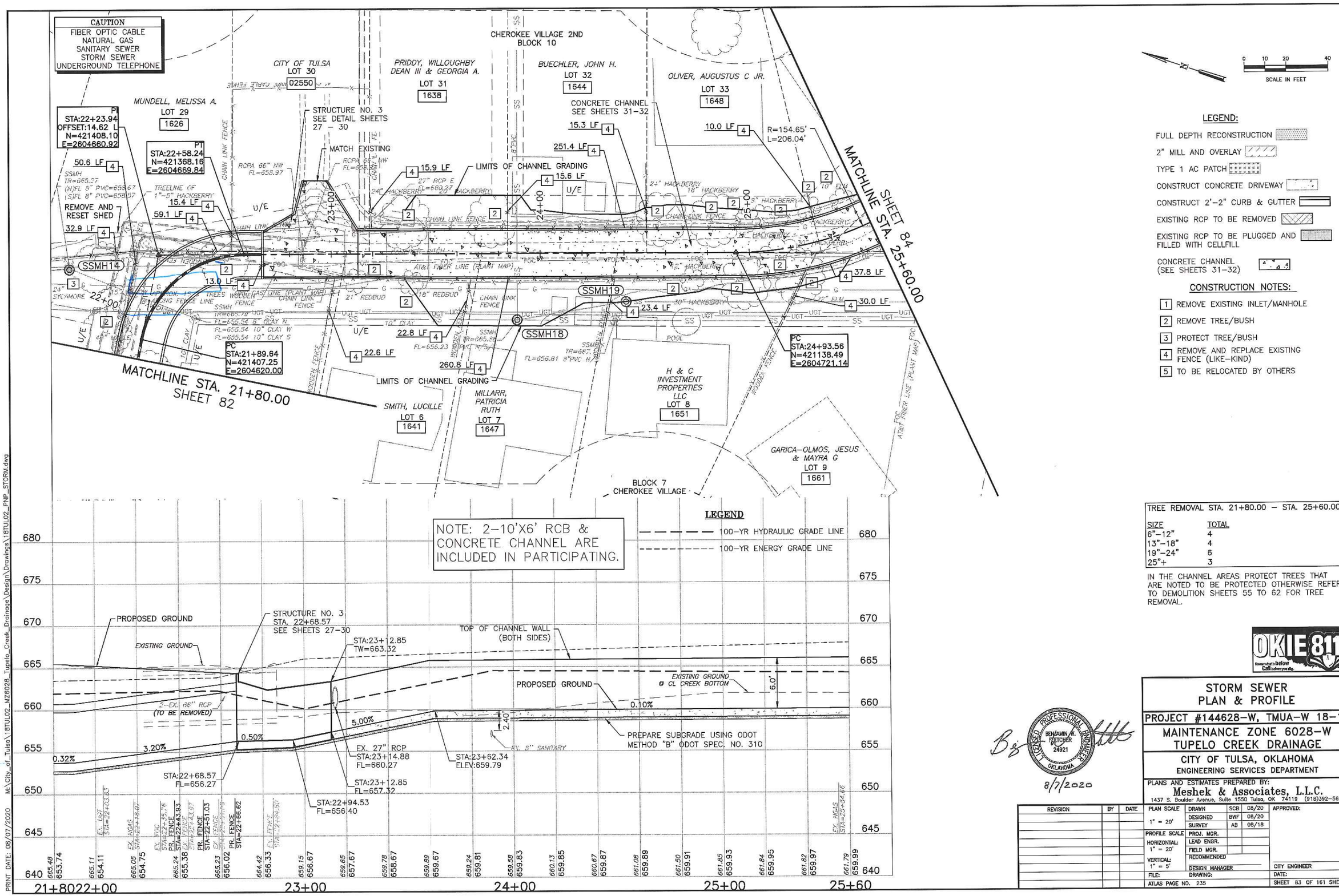

TREE REMOVAL STA. 21+80.00 – STA. 25+60.00	
SIZE	TOTAL
6"–12"	4
13"–18"	4
19"–24"	6
25"+	3

IN THE CHANNEL AREAS PROTECT TREES THAT ARE NOTED TO BE PROTECTED OTHERWISE REFER TO DEMOLITION SHEETS 55 TO 62 FOR TREE REMOVAL.

OKIE 811 Know what's below. Call before you dig.

LICENSED PROFESSIONAL ENGINEER BENJAMIN W. FLETCHER 24921 OKLAHOMA

8/7/2020

STORM SEWER PLAN & PROFILE

PROJECT #144628–W, TMUA–W 18–16

MAINTENANCE ZONE 6028–W
TUPELO CREEK DRAINAGE

CITY OF TULSA, OKLAHOMA
ENGINEERING SERVICES DEPARTMENT

PLANS AND ESTIMATES PREPARED BY:
Meshek & Associates, L.L.C.
1437 S. Boulder Avenue, Suite 1550 Tulsa, OK 74119 (918)392–5620

REVISION	BY	DATE

PLAN SCALE 1" = 20'	DRAWN	SCB	08/20
	DESIGNED	BWF	08/20
	SURVEY	AB	08/18
PROFILE SCALE	PROJ. MGR.		
HORIZONTAL: 1" = 20'	LEAD ENGR.		
	FIELD MGR.		
VERTICAL: 1" = 5'	RECOMMENDED		
	DESIGN MANAGER		
FILE:	DRAWING:		
ATLAS PAGE NO. 239			

APPROVED:

CITY ENGINEER

DATE:

SHEET 83 OF 161 SHEETS

PRINT DATE: 08/07/2020 M:\City_of_Tulsa\18TUL02_MZ6028_Tupelo_Creek_Drainage\Design\Drawings\18TUL02_PNP_STORM.dwg

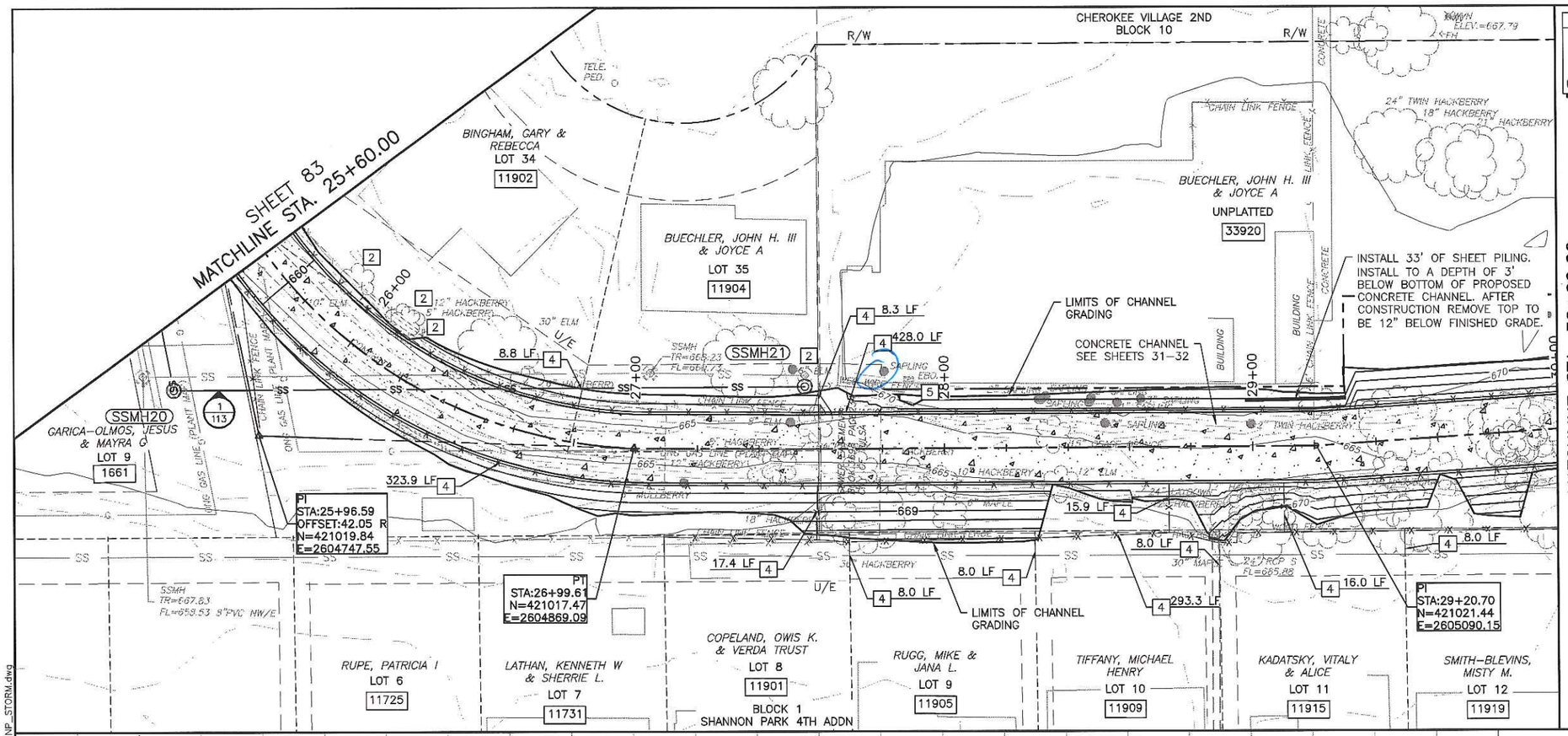

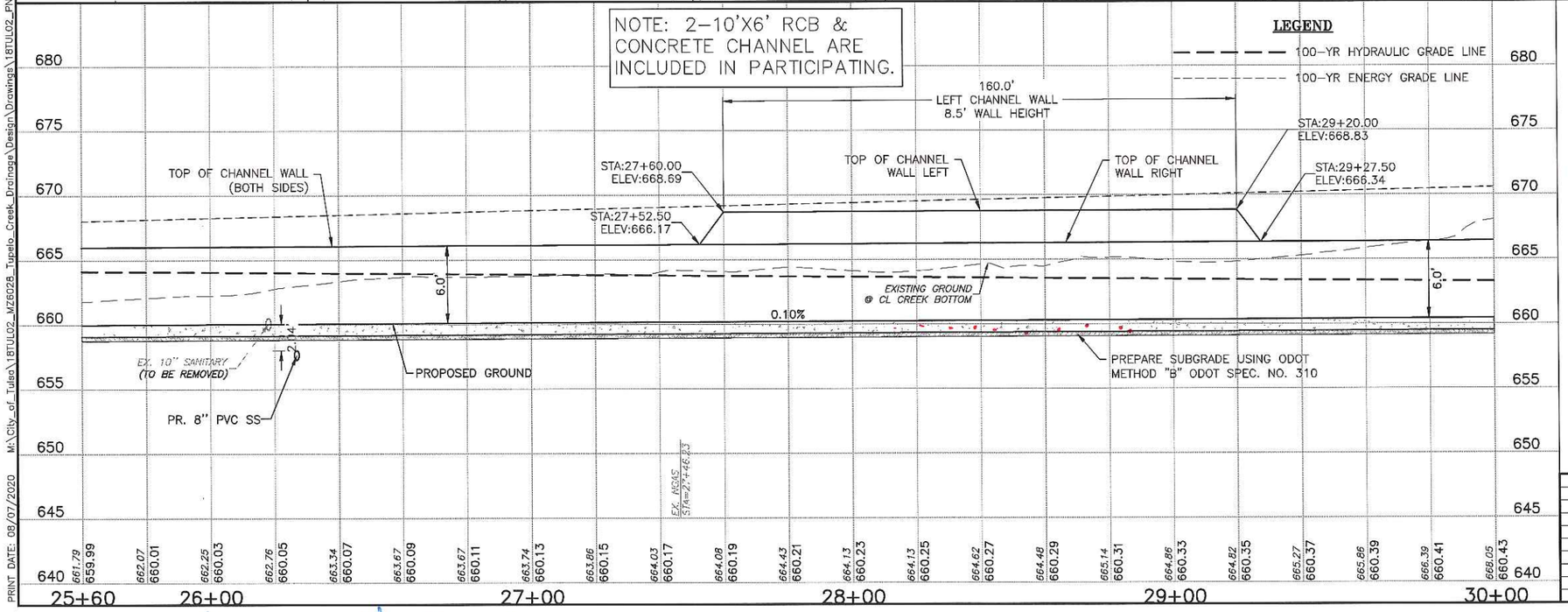

Notify Home Owner

TREE REMOVAL STA. 25+60.00 – STA. 30+00.00

SIZE	TOTAL
6"–12"	26
13"–18"	9
19"–24"	2
25"+	3

NOTE: IN THE CHANNEL AREA PROTECT TREES THAT ARE NOTED TO BE PROTECTED OTHERWISE REFER TO DEMOLITION SHEETS 55 TO 62 FOR TREE REMOVAL.

LICENSED PROFESSIONAL ENGINEER
BENJAMIN W. FLETCHER
24921
OKLAHOMA
8/7/2020

OKIE 811 Know what's below. Call before you dig.

STORM SEWER PLAN & PROFILE

PROJECT #144628-W, TMUA-W 18-16

MAINTENANCE ZONE 6028-W
TUPELO CREEK DRAINAGE

CITY OF TULSA, OKLAHOMA
ENGINEERING SERVICES DEPARTMENT

PLANS AND ESTIMATES PREPARED BY:
Meshek & Associates, L.L.C.
1437 S. Boulder Avenue, Suite 1550 Tulsa, OK 74119 (918)392-5620

REVISION	BY	DATE

PLAN SCALE 1" = 20'	DRAWN	SCB	08/20
	DESIGNED	BWF	08/20
	SURVEY	AB	08/18
PROFILE SCALE	PROJ. MGR.		
HORIZONTAL: 1" = 20'	LEAD ENGR.		
	FIELD MGR.		
VERTICAL: 1" = 5'	RECOMMENDED DESIGN MANAGER		
FILE:	DRAWING:		
ATLAS PAGE NO. 235			

APPROVED:
CITY ENGINEER
DATE:
SHEET 84 OF 161 SHEETS

PRINT DATE: 08/07/2020 M:\City_of_Tulsa\16TUL02_MZ6028_Tupelo_Creek_Drainage\Design\Drawings\16TUL02_PNP_STORM.dwg

SHEET 84
MATCHLINE STA. 30+00.00

R/W

UNDERGROUND RIGHT OF WAY EASEMENT
BOOK:3811 PAGE:1545
PUBLIC SERVICE COMPANY OF OKLAHOMA
ALSO
RIGHT OF WAY AGREEMENT
BOOK:3712 PAGE:534
OKLAHOMA NATURAL GAS COMPANY

BUECHLER, JOHN H. III & JOYCE A
UNPLATTED
33920

PI
STA:30+00.86
N=421028.08
E=2605170.03

SANITARY SEWER AGREEMENT
BOOK:3692 PAGE:408
CITY OF TULSA

LIMITS OF CHANNEL GRADING

CONCRETE CHANNEL
SEE SHEETS 31-32

412.5 LF
412.6 LF
317.4 LF
8.0 LF

STRUCTURE NO. 4
SEE SHEETS 33-34

SEE SHEET 20
DETAIL 3

POE
STA:35+00.00
N=421038.35
E=2605669.06

PROTECT

CAUTION
OVERHEAD ELECTRIC
STORM SEWER
SANITARY SEWER
WATERLINE

36" RCP N
FL=672.13

38" RCP N
FL=672.13

70' PERPETUAL EASEMENT
BOOK:3783 PAGE:40
CITY OF TULSA

AULTMAN, VALORIE L.
LOT 13
11925

CENICEROS, ERIKA G.
LOT 14
11929

GOMEZ, OCTAVIO & CECILIA RIVAS
LOT 15
11935

C & C HOLDINGS INC.
LOT 16
11939

SOTO, HUMBERTO S. & ELVIRA ZUNIGA
LOT 17
11945

MARTIN, KENNETH WAYNE & RONDA D.
LOT 18
11949

BLOCK 1
SHANNON PARK 4TH ADDN

WOOD FENCE
CHAIN LINK FENCE
BOLLARD
BOLLARD 6" DIA 2' TALL

N
0 10 20 40
SCALE IN FEET

LEGEND:

- PROPOSED CONTOUR — 300
- EXISTING CONTOUR — 300
- FULL DEPTH RECONSTRUCTION
- 2" MILL AND OVERLAY
- TYPE 1 AC PATCH
- CONSTRUCT CONCRETE DRIVEWAY
- CONSTRUCT 2'-2" CURB & GUTTER
- EXISTING RCP TO BE REMOVED
- EXISTING RCP TO BE PLUGGED AND FILLED WITH CELLFILL
- CONCRETE CHANNEL (SEE SHEETS 31-32)

CONSTRUCTION NOTES:

1. REMOVE EXISTING INLET/MANHOLE
2. REMOVE TREE
3. PROTECT TREE
4. REMOVE AND REPLACE EXISTING FENCE (LIKE-KIND)
5. TO BE RELOCATED BY OTHERS

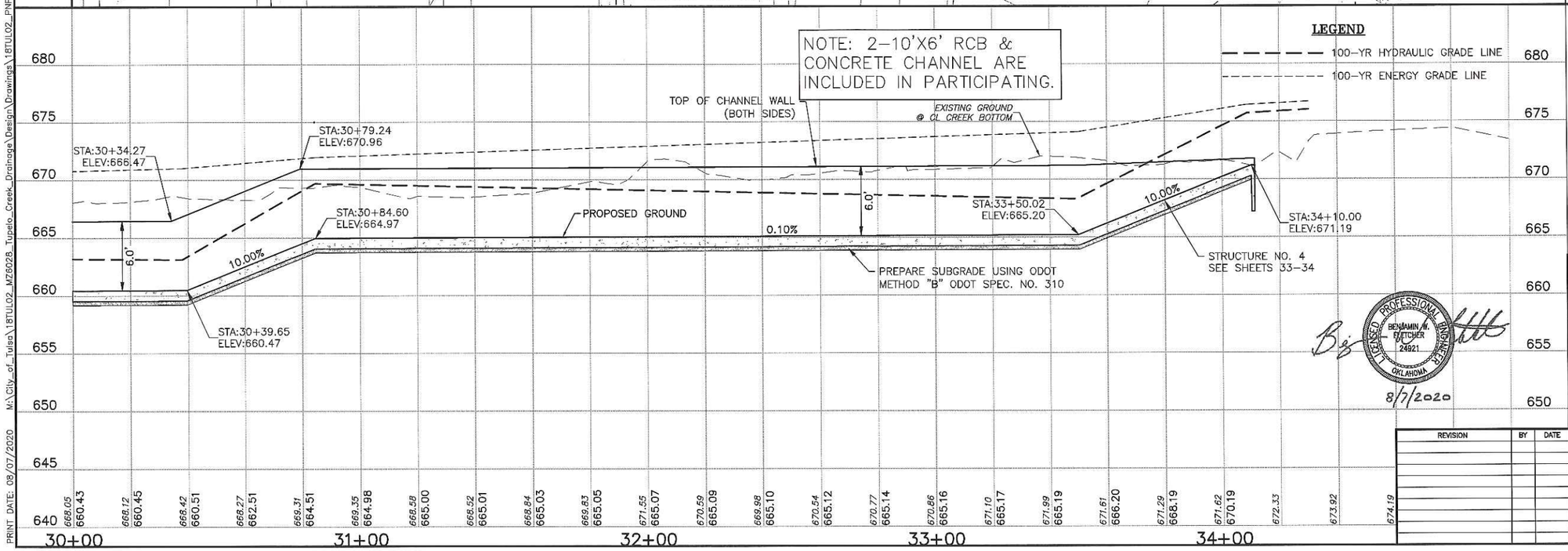

TREE REMOVAL STA. 30+00.00 - STA. 35+00.00

SIZE	TOTAL
6"-12"	41
13"-18"	5
19"-24"	3
25"+	1

NOTE: IN THE CHANNEL AREA PROTECT TREES THAT ARE NOTED TO BE PROTECTED OTHERWISE REFER TO DEMOLITION SHEETS 55 TO 62 FOR TREE REMOVAL.

OKIE 811 Know what's below. Call before you dig.

STORM SEWER PLAN & PROFILE

PROJECT #144628-W, TMUA-W 18-16

MAINTENANCE ZONE 6028-W
TUPELO CREEK DRAINAGE

CITY OF TULSA, OKLAHOMA
ENGINEERING SERVICES DEPARTMENT

LICENSED PROFESSIONAL ENGINEER BENJAMIN W. FLETCHER 24921 OKLAHOMA
8/7/2020

PLANS AND ESTIMATES PREPARED BY:
Meshek & Associates, L.L.C.
1437 S. Boulder Avenue, Suite 1550 Tulsa, OK 74119 (918)392-5620

REVISION	BY	DATE

PLAN SCALE 1" = 20'	DRAWN	SCB	08/20
	DESIGNED	BWF	08/20
	SURVEY	AB	08/18
PROFILE SCALE	PROJ. MGR.		
HORIZONTAL: 1" = 20'	LEAD ENGR.		
	FIELD MGR.		
VERTICAL: 1" = 5'	RECOMMENDED DESIGN MANAGER		
FILE:	DRAWING:		
ATLAS PAGE NO. 235			

APPROVED:

CITY ENGINEER

DATE:

SHEET 85 OF 161 SHEETS

PRINT DATE: 08/07/2020 M:\City_of_Tulsa\18TUL02_MZ6028_Tupelo_Creek_Drainage\Design\Drawings\18TUL02_PNP_STORM.dwg

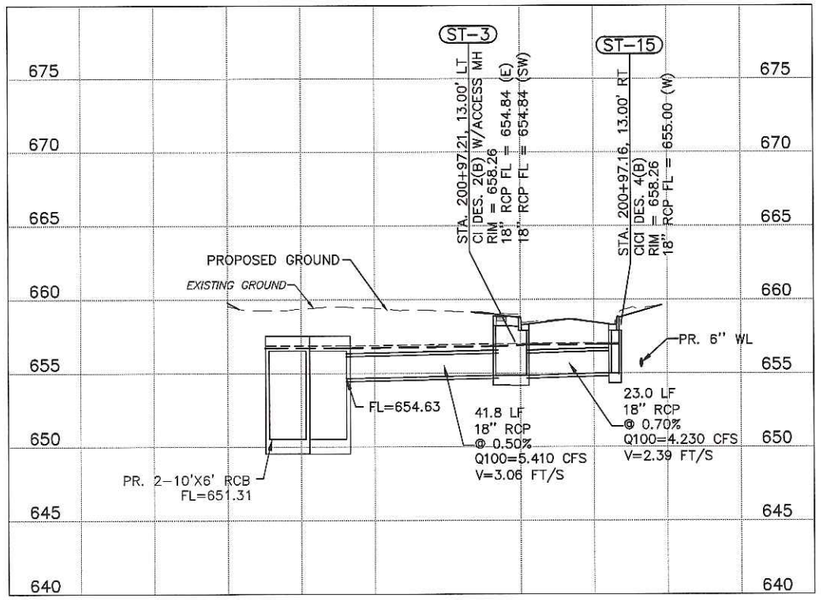

1 STORM SEWER PROFILE
SCALE: 1"=20'

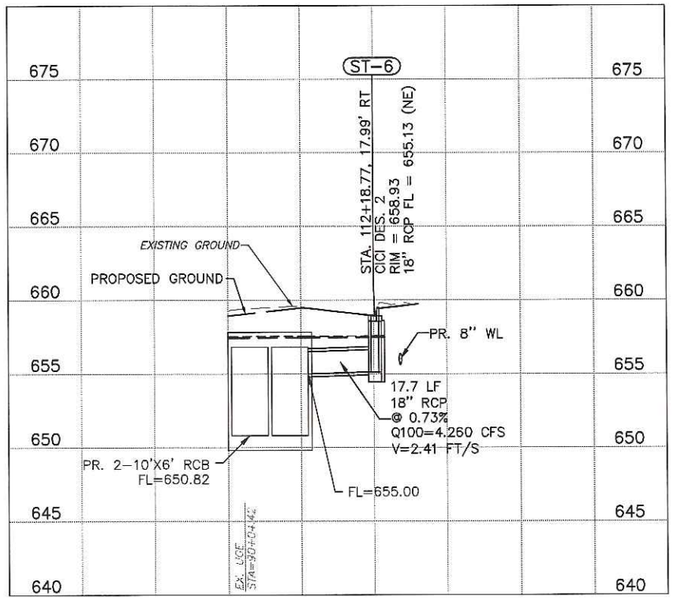

2 STORM SEWER PROFILE
SCALE: 1"=20'

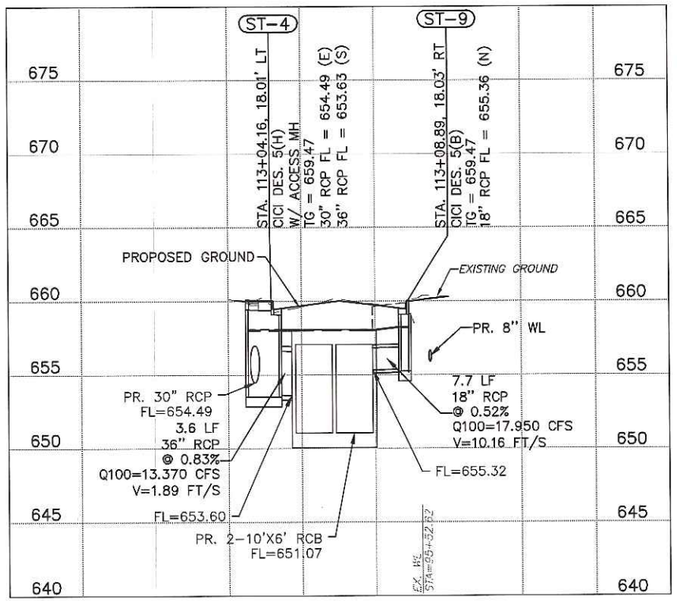

3 STORM SEWER PROFILE
SCALE: 1"=20'

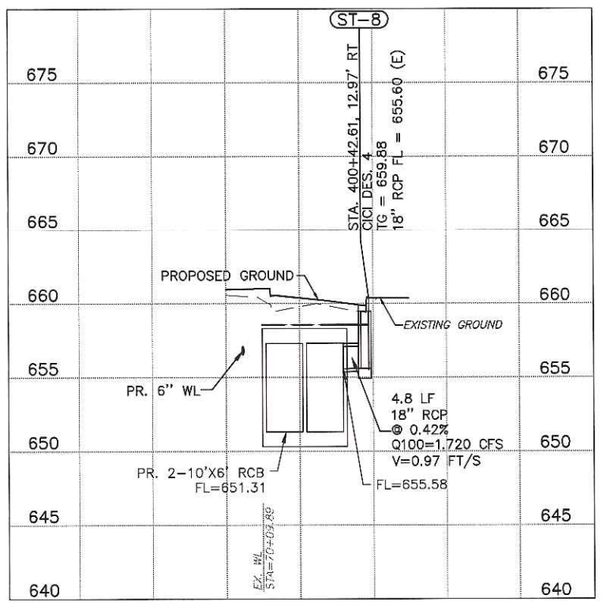

4 STORM SEWER PROFILE
SCALE: 1"=20'

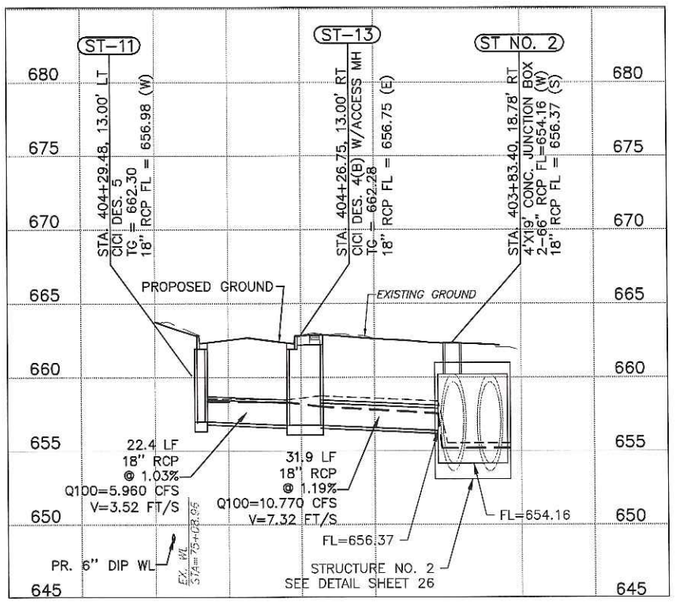

5 STORM SEWER PROFILE
SCALE: 1"=20'

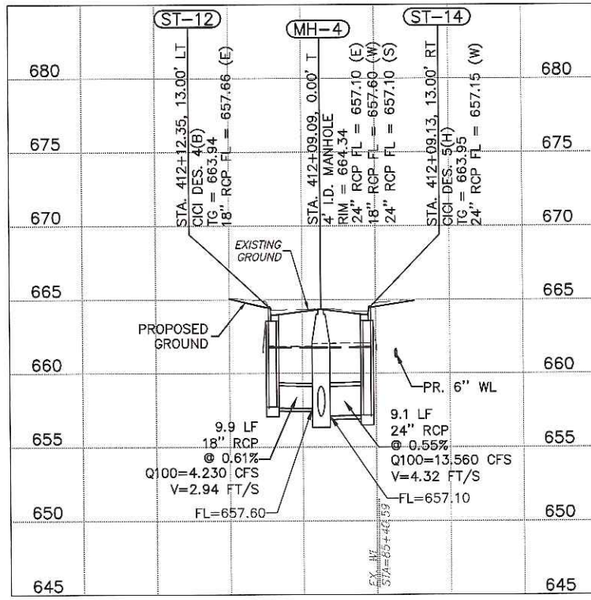

6 STORM SEWER PROFILE
SCALE: 1"=20'

LEGEND

100-YR HYDRAULIC GRADE LINE

100-YR ENERGY GRADE LINE

NOTE; FULL DEPTH ROCK BACKFILL WHERE PIPES ARE INSTALLED UNDER ROADWAY PAVEMENT.

LICENSED PROFESSIONAL ENGINEER
BENJAMIN W. FLETCHER
24921
OKLAHOMA

8/7/2020

OKIE 811
Know what's below. Call before you dig.

STORM SEWER PROFILES

PROJECT #144628-W, TMUA-W 18-16

MAINTENANCE ZONE 6028-W
TUPELO CREEK DRAINAGE

CITY OF TULSA, OKLAHOMA
ENGINEERING SERVICES DEPARTMENT

PLANS AND ESTIMATES PREPARED BY:
Meshek & Associates, L.L.C.
1437 S. Boulder Avenue, Suite 1550 Tulsa, OK 74119 (918)392-5620

REVISION	BY	DATE

PLAN SCALE: N/A	DRAWN	SCB	08/20
	DESIGNED	BWF	08/20
	SURVEY	AB	08/18
PROFILE SCALE	PROJ. MGR.		
HORIZONTAL: 1" = 20'	LEAD ENGR.		
	FIELD MGR.		
VERTICAL: 1" = 5'	RECOMMENDED DESIGN MANAGER		
FILE:	DRAWING:		
ATLAS PAGE NO. 235			

APPROVED:

CITY ENGINEER

DATE:

SHEET 86 OF 161 SHEETS

PRINT DATE: 08/07/2020 M:\City_of_Tulsa\18TUL02_MZ6028_Tupelo_Creek_Drainage\Design\Drawings\18TUL02_PNP_STORM.dwg

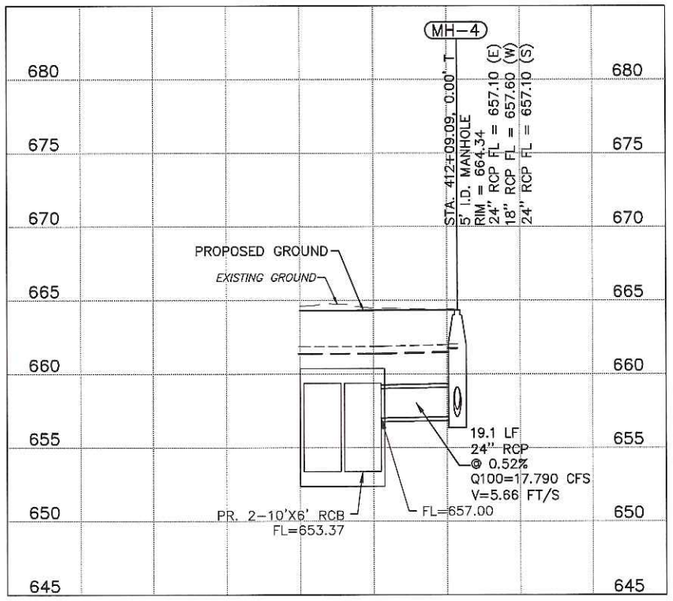

7 STORM SEWER PROFILE
SCALE: 1"=20'

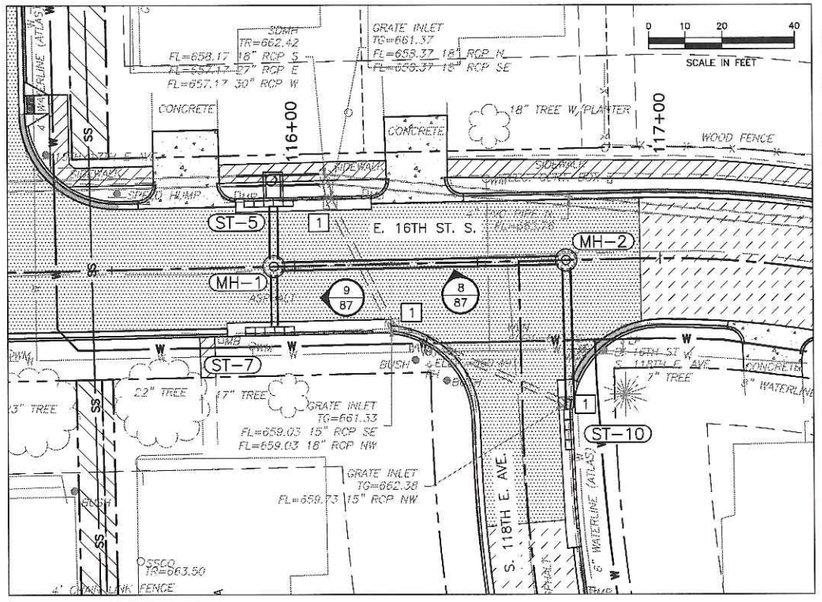

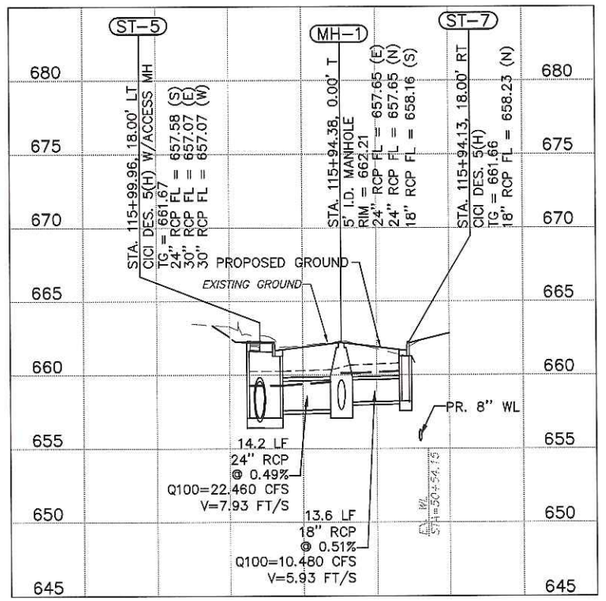

9 STORM SEWER PROFILE
SCALE: 1"=20'

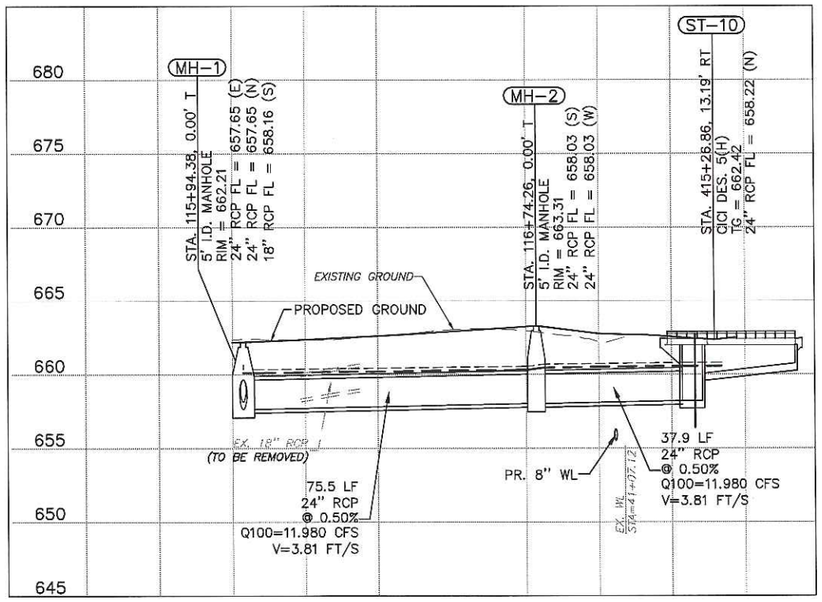

8 STORM SEWER PROFILE
SCALE: 1"=20'

LEGEND

- 100-YR HYDRAULIC GRADE LINE
- 100-YR ENERGY GRADE LINE

CONSTRUCTION NOTES:

1. REMOVE EXISTING INLET/MANHOLE
2. REMOVE TREE/BUSH
3. PROTECT TREE/BUSH
4. REMOVE AND REPLACE EXISTING FENCE (LIKE-KIND)
5. TO BE RELOCATED BY OTHERS

NOTE; FULL DEPTH ROCK BACKFILL WHERE PIPES ARE INSTALLED UNDER ROADWAY PAVEMENT.

OKIE 811 Know what's below. Call before you dig.

BENJAMIN W. FLETCHER 24921 LICENSED PROFESSIONAL ENGINEER OKLAHOMA

8/7/2020

STORM SEWER PROFILES

PROJECT #144628-W, TMUA-W 18-16

MAINTENANCE ZONE 6028-W
TUPELO CREEK DRAINAGE

CITY OF TULSA, OKLAHOMA
ENGINEERING SERVICES DEPARTMENT

PLANS AND ESTIMATES PREPARED BY:
Meshek & Associates, L.L.C.
1437 S. Boulder Avenue, Suite 1550 Tulsa, OK 74119 (918)392-5620

REVISION	BY	DATE

PLAN SCALE	DRAWN	SCB	08/20
1" = 20'	DESIGNED	BWF	08/20
	SURVEY	AB	08/18
PROFILE SCALE	PROJ. MGR.		
HORIZONTAL: 1" = 20'	LEAD ENGR.		
	FIELD MGR.		
VERTICAL: 1" = 5'	RECOMMENDED		
	DESIGN MANAGER		
FILE:	DRAWING:		
ATLAS PAGE NO. 235			

APPROVED:

CITY ENGINEER

DATE:

SHEET 87 OF 161 SHEETS

PRINT DATE: 08/07/2020 M:\City_of_Tulsa\18TUL02_MZ6028_Tupelo_Creek_Drainage\Design\Drawings\18TUL02_PNP_STORM.dwg

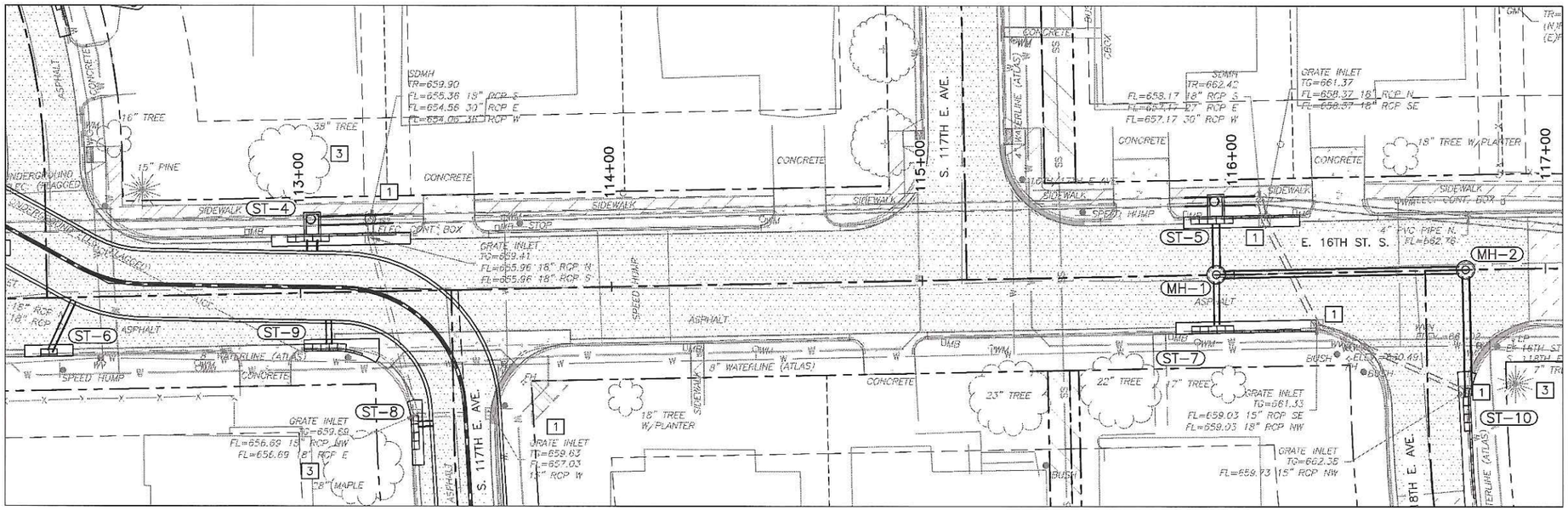

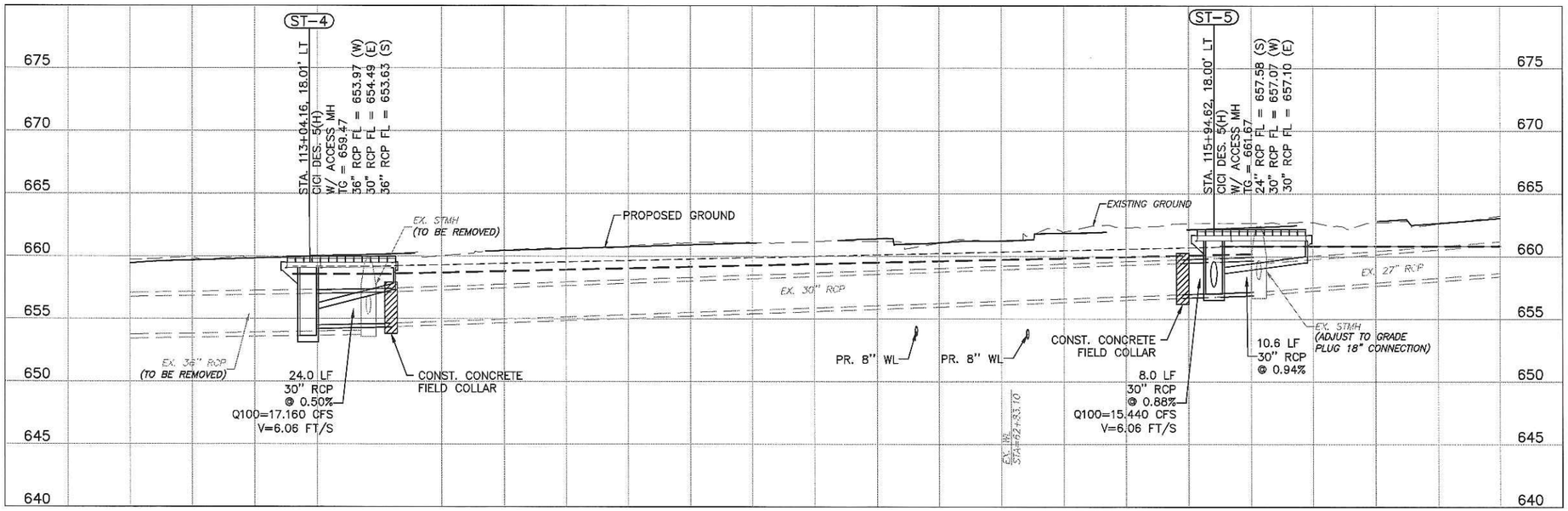

10 STORM SEWER PROFILE
SCALE: 1"=20'

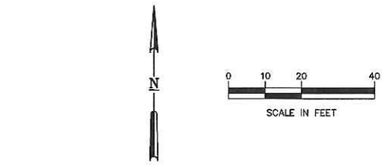

LEGEND

- 100-YR HYDRAULIC GRADE LINE
- 100-YR ENERGY GRADE LINE

CONSTRUCTION NOTES:

1. REMOVE EXISTING INLET/MANHOLE
2. REMOVE TREE/BUSH
3. PROTECT TREE/BUSH
4. REMOVE AND REPLACE EXISTING FENCE (LIKE-KIND)
5. TO BE RELOCATED BY OTHERS

NOTE; FULL DEPTH ROCK BACKFILL WHERE PIPES ARE INSTALLED UNDER ROADWAY PAVEMENT.



8/7/2020

OKIE 811 Know what's below. Call before you dig.

STORM SEWER PROFILES

PROJECT #144628-W, TMUA-W 18-16

MAINTENANCE ZONE 6028-W
TUPELO CREEK DRAINAGE

CITY OF TULSA, OKLAHOMA
ENGINEERING SERVICES DEPARTMENT

PLANS AND ESTIMATES PREPARED BY:
Meshek & Associates, L.L.C.
1437 S. Boulder Avenue, Suite 1550 Tulsa, OK 74119 (918)392-5620

REVISION	BY	DATE

PLAN SCALE	DRAWN	SCB	08/20
1" = 20'	DESIGNED	BWF	08/20
	SURVEY	AB	08/18
PROFILE SCALE	PROJ. MGR.		
HORIZONTAL: 1" = 20'	LEAD ENGR.		
	FIELD MGR.		
VERTICAL: 1" = 5'	RECOMMENDED		
	DESIGN MANAGER		
FILE:	DRAWING:		
ATLAS PAGE NO. 235			

APPROVED:

CITY ENGINEER

DATE:

SHEET 88 OF 161 SHEETS

PRINT DATE: 08/07/2020 M:\City_of_Tulsa\18TUL02_MZ6028_Tupelo_Creek_Drainage\Design\Drawings\18TUL02_PNP_STORM.dwg

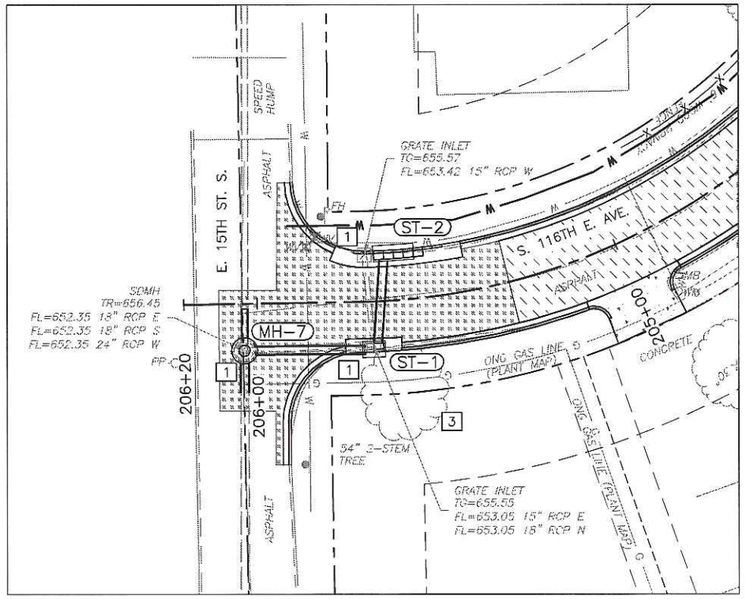

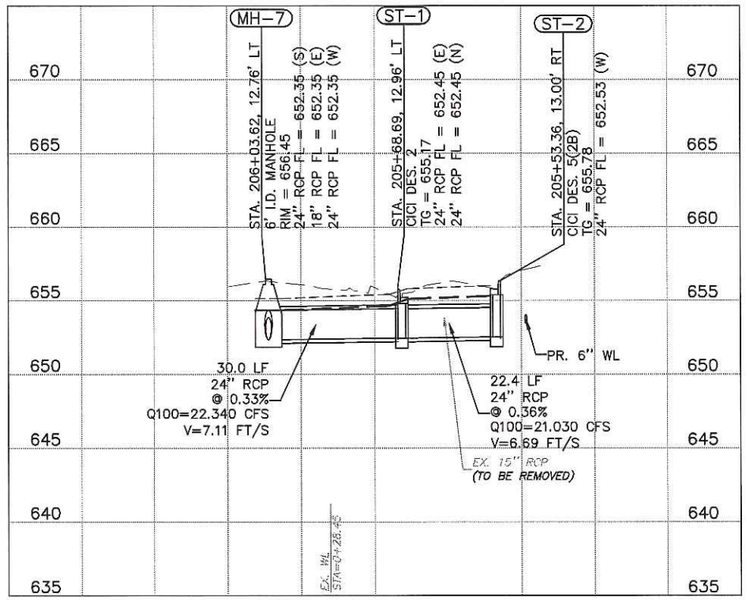

11 STORM SEWER PROFILE
SCALE: 1"=20'

0 10 20 40
SCALE IN FEET

LEGEND

— — — — — 100-YR HYDRAULIC GRADE LINE

- - - - - - - - - - 100-YR ENERGY GRADE LINE

CONSTRUCTION NOTES:

1. REMOVE EXISTING INLET/MANHOLE
2. REMOVE TREE/BUSH
3. PROTECT TREE/BUSH
4. REMOVE AND REPLACE EXISTING FENCE (LIKE-KIND)
5. TO BE RELOCATED BY OTHERS

NOTE; FULL DEPTH ROCK BACKFILL WHERE PIPES ARE INSTALLED UNDER ROADWAY PAVEMENT.

OKIE 811 Know what's below. Call before you dig.

LICENSED PROFESSIONAL ENGINEER
BENJAMIN W. FLETCHER
24921
OKLAHOMA

8/7/2020

STORM SEWER PROFILES

PROJECT #144628-W, TMUA-W 18-16

MAINTENANCE ZONE 6028-W
TUPELO CREEK DRAINAGE

CITY OF TULSA, OKLAHOMA
ENGINEERING SERVICES DEPARTMENT

PLANS AND ESTIMATES PREPARED BY:
Meshek & Associates, L.L.C.
1437 S. Boulder Avenue, Suite 1550 Tulsa, OK 74119 (918)392-5620

REVISION	BY	DATE

PLAN SCALE 1" = 20'	DRAWN	SCB	08/20	APPROVED:
	DESIGNED	BWF	08/20	
	SURVEY	AB	08/18	
PROFILE SCALE	PROJ. MGR.			
HORIZONTAL: 1" = 20'	LEAD ENGR.			
	FIELD MGR.			
VERTICAL: 1" = 5'	RECOMMENDED DESIGN MANAGER			CITY ENGINEER
FILE:	DRAWING:			DATE:
ATLAS PAGE NO. 235				SHEET 89 OF 161 SHEETS

PRINT DATE: 08/07/2020 M:\City_of_Tulsa\18TUL02_MZ6028_Tupelo_Creek_Drainage\Design\Drawings\18TUL02_PNP_STORM.dwg



0 50 100 200
SCALE IN FEET

PROJECT #144628-W, TMUA-W 18-16 MAINTENANCE ZONE 6028-W

LICENSED PROFESSIONAL ENGINEER
BENJAMIN W. FLETCHER
24921
OKLAHOMA
8/7/2020

OKIE 811
Know what's below. Call before you dig.

WATERLINE KEY PLAN

PROJECT #144628-W, TMUA-W 18-16
MAINTENANCE ZONE 6028-W
TUPELO CREEK DRAINAGE
CITY OF TULSA, OKLAHOMA
ENGINEERING SERVICES DEPARTMENT

PLANS AND ESTIMATES PREPARED BY:
Meshek & Associates, L.L.C.
1437 S. Boulder Avenue, Suite 1550 Tulsa, OK 74119 (918)392-5620

REVISION	BY	DATE

PLAN SCALE	DRAWN	SCB	08/20
1" = 100'	DESIGNED	BWF	08/20
	SURVEY	AB	08/18
PROFILE SCALE	PROJ. MGR.		
HORIZONTAL: N/A	LEAD ENGR.		
	FIELD MGR.		
VERTICAL: N/A	RECOMMENDED		
	DESIGN MANAGER		
FILE:	DRAWING:		
ATLAS PAGE NO. 235			

APPROVED:
CITY ENGINEER
DATE:
SHEET 90 OF 161 SHEETS

PRINT DATE: 08/07/2020 M:\City_of_Tulsa\18TUL02_MZ6028_Tupelo_Creek_Drainage\Design\Drawings\18TUL02_WATER_KEY_PLAN.dwg

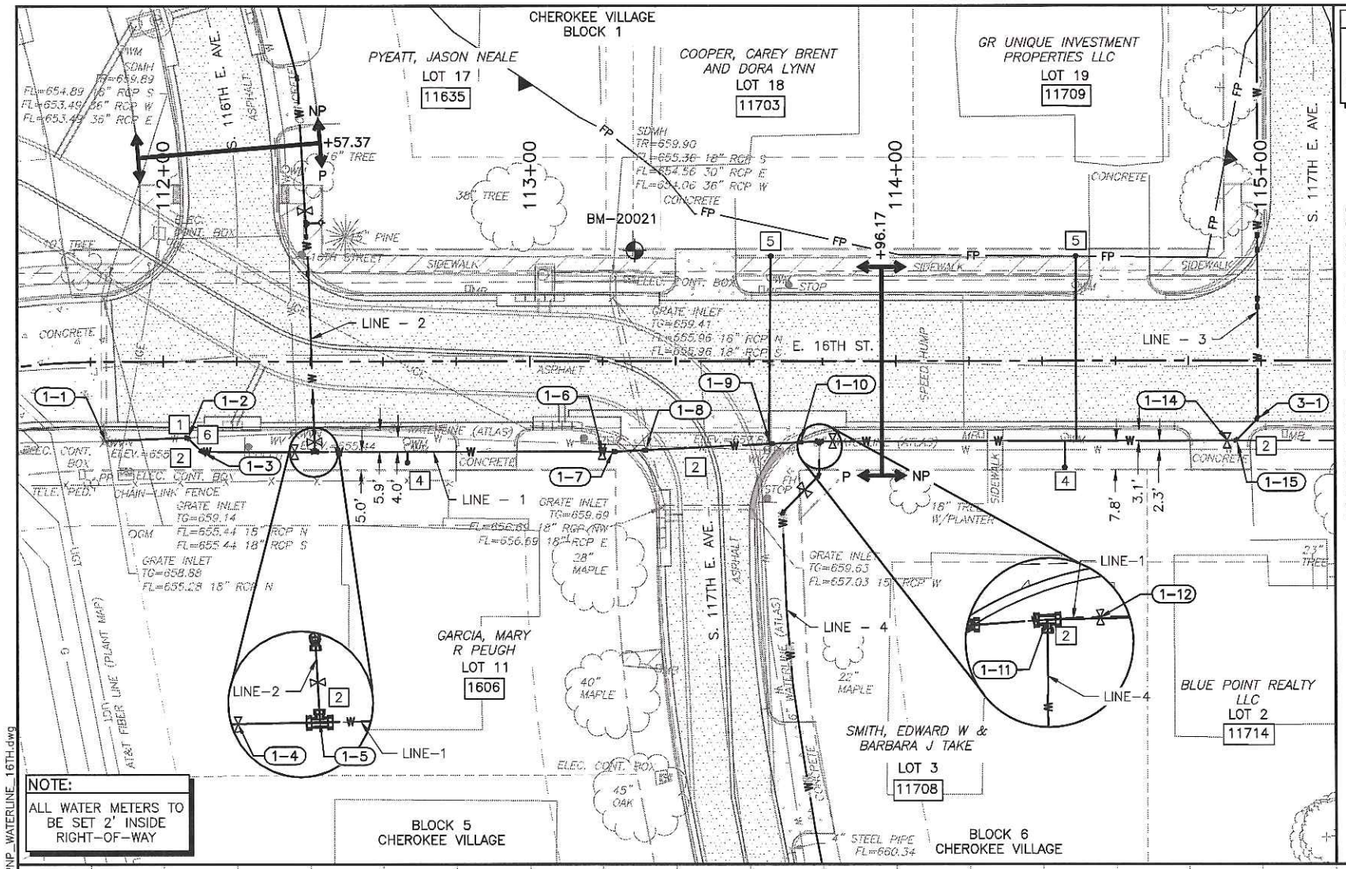

NOTE:
ALL WATER METERS TO BE SET 2' INSIDE RIGHT-OF-WAY

CAUTION
NATURAL GAS
STORM SEWER
UNDERGROUND ELECTRIC
UNDERGROUND TELEPHONE
WATERLINE

MATCHLINE STA. 115+20.00

N

0 10 20 40
SCALE IN FEET

CONSTRUCTION NOTES:

1. CONNECT TO EXISTING WATERLINE
2. PIPE DEFLECTION NOT TO EXCEED 3° ON ANY FITTING OR JOINT
3. REMOVE FIRE HYDRANT
4. REMOVE AND RECONSTRUCT WATER METER, RESTORE SHORT WATER SERVICE
5. REMOVE AND RECONSTRUCT WATER METER, RESTORE LONG WATER SERVICE
6. CUT & PLUG EXISTING WATERLINE
7. REMOVE AND RESET ELECTRICAL BOX
8. REMOVE AND REPLACE EXISTING FENCE (LIKE-KIND)

LEGEND

- PROPOSED WATER LINE
- PROPOSED FENCE
- C.R.L.
- EXISTING FENCE
- SECTION LINE
- RIGHT-OF-WAY
- LOT LINE / PROPERTY LINE
- OHE — EXISTING OVERHEAD ELECTRIC
- UGE — EXISTING UNDERGROUND ELECTRIC
- G — EXISTING GAS LINE
- SS — EXISTING SANITARY SEWER
- EXISTING STORM SEWER
- W — EXISTING WATER LINE
- EXISTING EASEMENT LINE
- FP — FLOODPLAIN LINE
- BENCHMARK

FURNISHED AND INSTALLED BY CONTRACTOR

TABLE OF FITTINGS

FITTING NO.	DESCRIPTION	NORTHING	EASTING	STATION	OFFSET
1-1	EX. GATE VALVE	421765.13	2603954.63	111+84.00	21.60' RT
1-2	8" 45° BEND R.J.	421766.54	2603977.15	112+06.68	20.66' RT
1-3	8" 45° BEND R.J.	421762.74	2603981.10	112+10.55	24.54' RT
1-4	8" GATE VALVE R.J.	421763.23	2604006.24	112+35.70	24.57' RT
1-5	8" X 8" X 6" TEE R.J.	421763.34	2604011.77	112+41.22	24.57' RT
1-6	8" GATE VALVE R.J.	421764.94	2604090.38	113+19.86	24.59' RT
1-7	8" 45° BEND R.J.	421765.02	2604093.83	113+23.30	24.58' RT
1-8	8" 45° BEND R.J.	421765.62	2604102.17	113+31.65	24.15' RT
1-9	8" 45° BEND R.J.	421768.03	2604136.58	113+66.10	22.44' RT
1-10	8" 45° BEND R.J.	421768.60	2604144.31	113+73.85	22.03' RT
1-11	8" X 8" X 6" TEE R.J.	421768.94	2604149.57	113+79.11	21.80' RT
1-12	8" GATE VALVE R.J.	421769.10	2604153.18	113+82.72	21.71' RT
1-14	8" GATE VALVE R.J.	421771.37	2604261.00	114+90.57	21.66' RT
1-15	8" 45° BEND R.J.	421771.41	2604263.55	114+93.11	21.67' RT

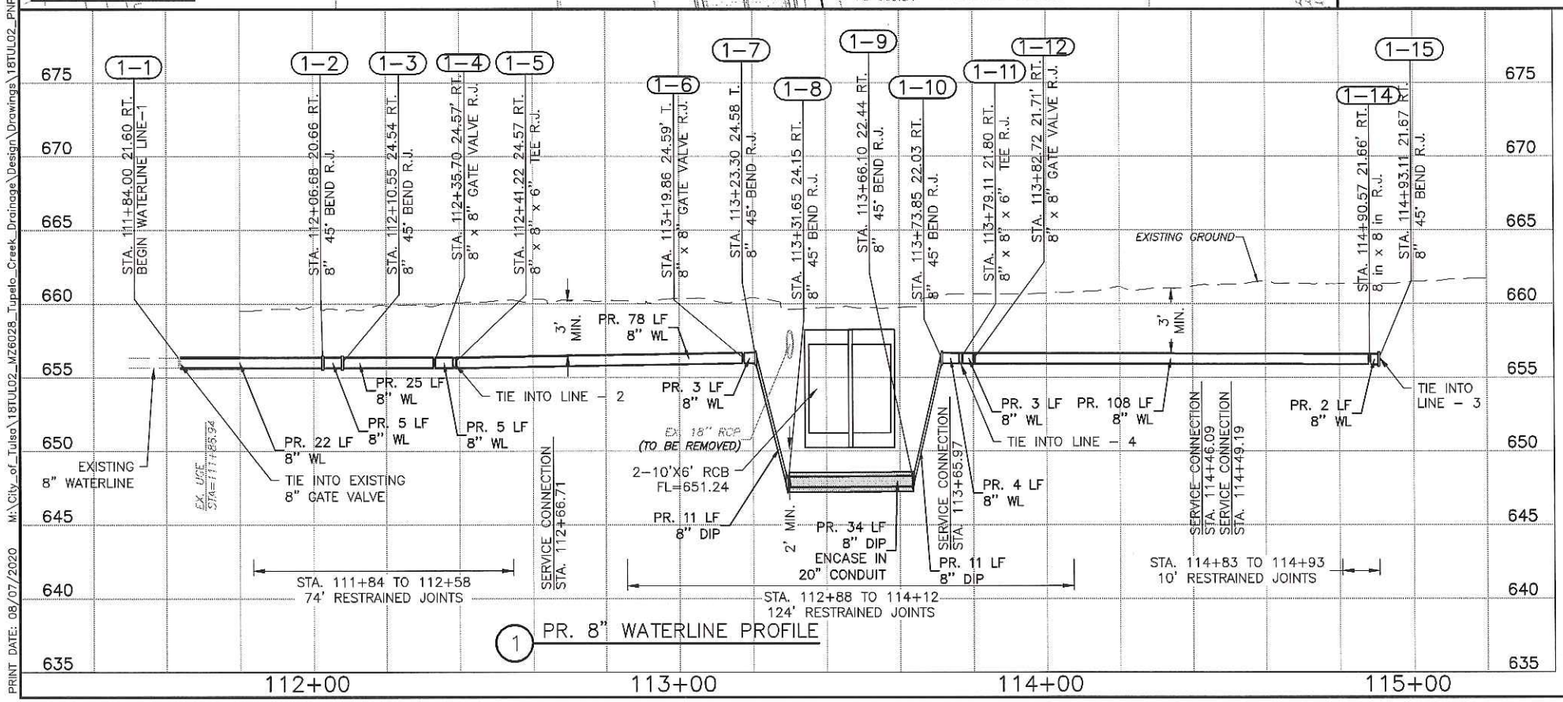

1 PR. 8" WATERLINE PROFILE

BENCHMARK
BM-20021
CHISELED "X" SET
N=421819.77
E=2604098.25
EL=660.44

OKIE 811
Know what's below. Call before you dig.

WATERLINE PLAN & PROFILE LINE – 1

PROJECT #144628-W, TMUA-W 18-16

MAINTENANCE ZONE 6028-W TUPELO CREEK DRAINAGE

CITY OF TULSA, OKLAHOMA
ENGINEERING SERVICES DEPARTMENT

PLANS AND ESTIMATES PREPARED BY:
Meshek & Associates, L.L.C.
1437 S. Boulder Avenue, Suite 1550 Tulsa, OK 74119 (918)392-5620

LICENSED PROFESSIONAL ENGINEER — BENJAMIN W. FLETCHER — 24921 — OKLAHOMA

8/7/2020

REVISION	BY	DATE

PLAN SCALE 1" = 20'	DRAWN	SCB	08/20
	DESIGNED	BWF	08/20
	SURVEY	AB	08/18
PROFILE SCALE	PROJ. MGR.		
HORIZONTAL: 1" = 20'	LEAD ENGR.		
	FIELD MGR.		
VERTICAL: 1" = 5'	RECOMMENDED DESIGN MANAGER		
FILE:	DRAWING:		
ATLAS PAGE NO. 235			

APPROVED:
CITY ENGINEER
DATE:
SHEET 91 OF 161 SHEETS

PROJECT #144628-W, TMUA-W 18-16 MAINTENANCE ZONE 6028-W

PRINT DATE: 08/07/2020 M:\City_of_Tulsa\18TUL02_WZ6028_Tupelo_Creek_Drainage\Design\Drawings\18TUL02_PNP_WATERLINE_16TH.dwg

MATCHLINE STA. 115+20.00

MARKLAND, KARLENE SUSAN
LOT 25
11719

PETERSON, PATRICIA M
LOT 26
11725

PERKINS, MARK WESLEY II & CORINNE M
LOT 27
1538

CHEROKEE VILLAGE
BLOCK 1

ABDALLA, ALICE A
LOT 1
11722

BLOCK 6
CHEROKEE VILLAGE

ORTIZ, CHRISTIAN ERNESTO & LAURA MAY
LOT 1
1607

BLOCK 7
CHEROKEE VILLAGE

GATZKE, DELMAR ARBIE & SHARON MARIE REV TRUST
LOT 1
11806

BLOCK 10
CHEROKEE VILLAGE

S. 118TH E. AVE.

E. 16TH ST.

BM-20024

LINE – 1

LINE – 3

LINE – 4

42.7 LF

FIRE HYDRANT ASSEMBLY TO INCLUDE:
1 – 8"X8"X6" TEE R.J.
1 – FIRE HYDRANT

FIRE HYDRANT ASSEMBLY TO INCLUDE:
1 – 8"X8"X6" TEE R.J.
1 – FIRE HYDRANT

NOTE:
ALL WATER METERS TO BE SET 2' INSIDE RIGHT–OF–WAY

CAUTION
FIBER OPTIC CABLE
NATURAL GAS
SANITARY SEWER
WATERLINE

CONSTRUCTION NOTES:

1. CONNECT TO EXISTING WATERLINE
2. PIPE DEFLECTION NOT TO EXCEED 3° ON ANY FITTING OR JOINT
3. REMOVE FIRE HYDRANT
4. REMOVE AND RECONSTRUCT WATER METER, RESTORE SHORT WATER SERVICE
5. REMOVE AND RECONSTRUCT WATER METER, RESTORE LONG WATER SERVICE
6. CUT & PLUG EXISTING WATERLINE
7. REMOVE AND RESET ELECTRICAL BOX
8. REMOVE AND REPLACE EXISTING FENCE (LIKE–KIND)

LEGEND

- PROPOSED WATER LINE
- PROPOSED FENCE
- C.R.L.
- EXISTING FENCE
- SECTION LINE
- RIGHT–OF–WAY
- LOT LINE / PROPERTY LINE
- EXISTING OVERHEAD ELECTRIC
- EXISTING UNDERGROUND ELECTRIC
- EXISTING GAS LINE
- EXISTING SANITARY SEWER
- EXISTING STORM SEWER
- EXISTING WATER LINE
- EXISTING EASEMENT LINE
- FLOODPLAIN LINE
- BENCHMARK

N

0 10 20 40
SCALE IN FEET

PROJECT #144628–W, TMUA–W 18–16 MAINTENANCE ZONE 6028–W

1 PR. 8" WATERLINE PROFILE

116+00 117+00 118+00

680 675 670 665 660 655 650 645 640

EXISTING GROUND

PR. 24" RCP

EX. 15" RCP (TO BE REMOVED)

STA. 115+40.28 21.63' RT. 8" 45° BEND R.J.
STA. 115+42.20 21.64' RT. 8" x 8" GATE VALVE R.J.
STA. 115+46.64 21.64' RT. 8" x 8" x 6" TEE R.J. W/FH ASSEMBLY
STA. 116+81.51 21.71' RT. 8" x 8" x 6" TEE R.J.
STA. 116+90.05 21.63' RT. 8" x 8" GATE VALVE R.J.
STA. 116+94.78 21.67' RT. 8" 45° BEND R.J.
STA. 116+99.65 21.66' RT. 8" 45° BEND R.J.
STA. 117+18.00 21.60' RT. 8" 11.25° BEND R.J.
STA. 117+65.28 21.69' RT. 8" 11.25° BEND R.J.
STA. 118+31.45 21.18' RT. 8" x 8" x 6" TEE R.J. W/FH ASSEMBLY
STA. 118+39.04 21.12' T. 8" x 8" x 6" TEE R.J. CONNECT TO EX. WL
STA. 118+41.35 21.04' RT. 8" x 8" GATE VALVE R.J.
STA. 118+44.00 20.30' RT. END WATERLINE LINE–1 8" SOLID SLEEVE R.J.

PR. 4 LF 8" WL
PR. 1 LF 8" WL
PR. 8" PVC SS
PR. 134 LF 8" WL
PR. 16 LF 8" WL
PR. 6 LF 8" WL
PR. 4 LF 8" WL
PR. 8 LF 8" WL
PR. 43 LF 8" WL
PR. 63 LF 8" WL
PR. 6 LF 8" WL
PR. 1 LF 8" WL
PR. 3 LF 8" WL

TIE INTO LINE – 3
TIE INTO EXISTING 8" WATERLINE
EXISTING 8" WATERLINE

SERVICE CONNECTION STA. 115+87.86
SERVICE CONNECTION STA. 116+53.12
SERVICE CONNECTION STA. 117+53.86

EX. WL STA=116+95.94

STA. 115+40 TO 115+50
10' RESTRAINED JOINTS

STA. 115+47 TO 115+87
40' BORE

STA. 116+71 TO 117+27
56' RESTRAINED JOINTS

STA. 117+61 TO 117+70
8' RESTRAINED JOINTS

STA. 117+88 TO 118+44
56' RESTRAINED JOINTS

2' MIN.
3' MIN.
4' MIN.

FURNISHED AND INSTALLED BY CONTRACTOR

TABLE OF FITTINGS

FITTING NO.	DESCRIPTION	NORTHING	EASTING	STATION	OFFSET
1-16	8" 45° BEND R.J.	421772.41	2604310.70	115+40.28	21.63' RT
1-17	8" GATE VALVE R.J.	421772.45	2604312.62	115+42.20	21.64' RT
1-18	8" X 8" X 6" TEE R.J.	421772.53	2604317.06	115+46.64	21.64' RT
1-21	8" X 8" X 6" TEE R.J.	421775.23	2604451.91	116+81.51	21.71' RT
1-22	8" GATE VALVE R.J.	421775.49	2604460.44	116+90.05	21.63' RT
1-23	8" 45° BEND R.J.	421775.55	2604465.16	116+94.78	21.67' RT
1-24	8" 45° BEND R.J.	421775.61	2604469.65	116+99.65	21.66' RT
1-25	8" 11.25° BEND R.J.	421775.18	2604486.64	117+18.00	21.60' RT
1-26	8" 11.25° BEND R.J.	421768.93	2604529.90	117+65.28	21.69' RT
1-29	8" X 8" X 6" TEE R.J.	421750.40	2604591.14	118+31.45	21.18' RT
1-30	8" X 8" X 6" TEE R.J.	421748.04	2604598.35	118+39.04	21.12' RT
1-31	8" GATE VALVE R.J.	421747.39	2604600.57	118+41.35	21.04' RT
1-32	8" SOLID SLEEVE R.J.	421746.48	2604603.50	118+44.42	20.97' RT
FH10	3-WAY FIRE HYDRANT	421764.56	2604317.14	115+46.55	29.62' RT
FH-1	3-WAY FIRE HYDRANT	421742.65	2604588.93	118+31.81	29.23' RT

BENCHMARK
BM–20024
CHISELED "X" SET
N=421813.68
E=2604424.73
EL=662.42

OKIE 811 Know what's below. Call before you dig.

WATERLINE PLAN & PROFILE
LINE – 1

PROJECT #144628–W, TMUA–W 18–16

MAINTENANCE ZONE 6028–W
TUPELO CREEK DRAINAGE

CITY OF TULSA, OKLAHOMA
ENGINEERING SERVICES DEPARTMENT

PLANS AND ESTIMATES PREPARED BY:
Meshek & Associates, L.L.C.
1437 S. Boulder Avenue, Suite 1550 Tulsa, OK 74119 (918)392–5620

LICENSED PROFESSIONAL ENGINEER BENJAMIN W. FLETCHER 24921 OKLAHOMA

8/7/2020

REVISION	BY	DATE

PLAN SCALE 1" = 20'	DRAWN	SCB	08/20	APPROVED:
	DESIGNED	BWF	08/20	
	SURVEY	AB	08/18	
PROFILE SCALE	PROJ. MGR.			
HORIZONTAL: 1" = 20'	LEAD ENGR.			
	FIELD MGR.			
VERTICAL: 1" = 5'	RECOMMENDED DESIGN MANAGER			CITY ENGINEER
FILE:	DRAWING:			DATE:
ATLAS PAGE NO. 235				SHEET 92 OF 161 SHEETS

PRINT DATE: 08/07/2020 M:\City_of_Tulsa\18TUL02_MZ6028_Tupelo_Creek_Drainage\Design\Drawings\18TUL02_PNP_WATERLINE_16TH.dwg

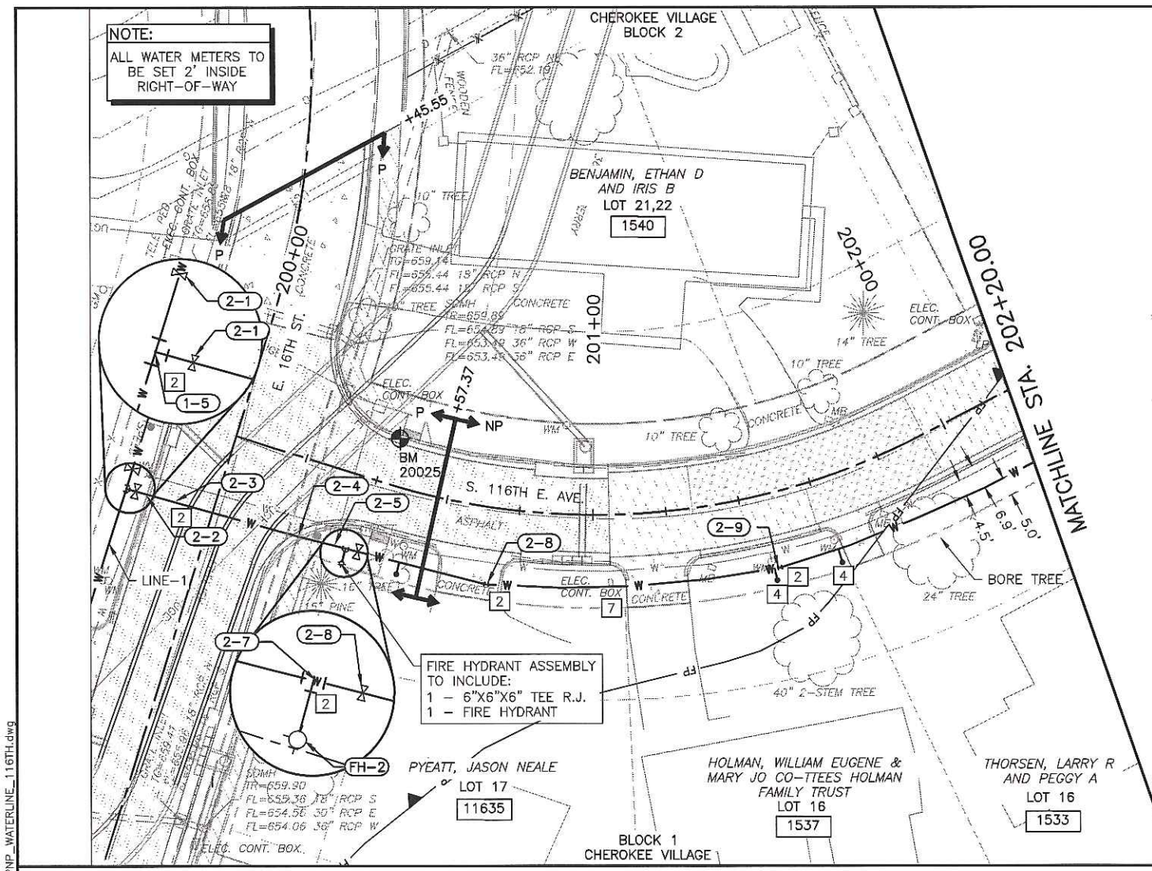

CAUTION
NATURAL GAS
STORM SEWER
UNDERGROUND ELECTRIC
UNDERGROUND TELEPHONE
WATERLINE

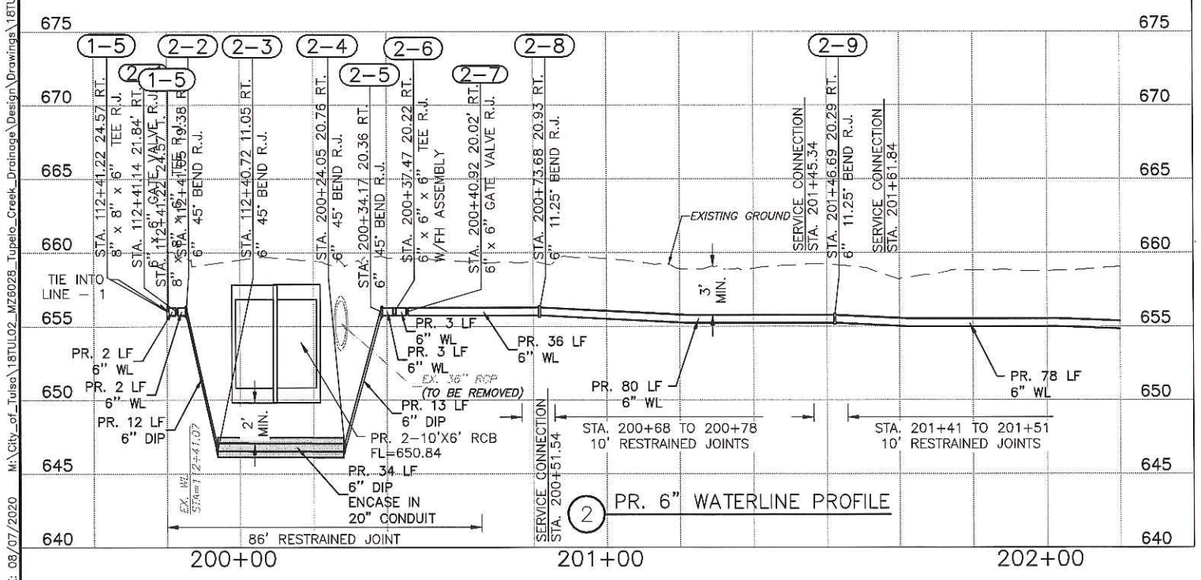

CONSTRUCTION NOTES:

1. CONNECT TO EXISTING WATERLINE
2. PIPE DEFLECTION NOT TO EXCEED 3° ON ANY FITTING OR JOINT
3. REMOVE FIRE HYDRANT
4. REMOVE AND RECONSTRUCT WATER METER, RESTORE SHORT WATER SERVICE
5. REMOVE AND RECONSTRUCT WATER METER, RESTORE LONG WATER SERVICE
6. CUT & PLUG EXISTING WATERLINE
7. REMOVE AND RESET ELECTRICAL BOX
8. REMOVE AND REPLACE EXISTING FENCE (LIKE-KIND)

SCALE IN FEET: 0 10 20 40

LEGEND

- PROPOSED WATER LINE
- PROPOSED FENCE
- C.R.L.
- EXISTING FENCE
- SECTION LINE
- RIGHT-OF-WAY
- LOT LINE / PROPERTY LINE
- EXISTING OVERHEAD ELECTRIC
- EXISTING UNDERGROUND ELECTRIC
- EXISTING GAS LINE
- EXISTING SANITARY SEWER
- EXISTING STORM SEWER
- EXISTING WATER LINE
- EXISTING EASEMENT LINE
- FLOODPLAIN LINE
- BENCHMARK

FURNISHED AND INSTALLED BY CONTRACTOR

TABLE OF FITTINGS

FITTING NO.	DESCRIPTION	NORTHING	EASTING	STATION	OFFSET
2-1	6" GATE VALVE R.J.	421766.07	2604011.63	112+41.14	21.84' RT
2-2	6" 45° BEND R.J.	421768.53	2604011.49	112+41.05	19.38' RT
2-3	6" 45° BEND R.J.	421776.84	2604010.99	112+40.72	11.05' RT
2-4	6" 45° BEND R.J.	421811.91	2604008.88	200+24.05	20.76' RT
2-5	6" 45° BEND R.J.	421822.01	2604008.28	200+34.17	20.36' RT
2-6	6" X 6" X 6" TEE R.J.	421825.31	2604008.07	200+37.47	20.22' RT
2-7	6" GATE VALVE R.J.	421828.76	2604007.80	200+40.92	20.02' RT
2-8	6" 11.25° BEND R.J.	421864.78	2604005.01	200+73.68	20.93' RT
2-9	6" 11.25° BEND R.J.	421939.27	2603975.11	201+46.69	20.29' RT
FH-2	3-WAY FIRE HYDRANT	421825.57	2604012.23	200+37.64	24.38' RT

BENCHMARK
BM-20025
CHISELED "X" SET
N=421830.06
E=2603975.10
EL=658.98

OKIE 811 Know what's below. Call before you dig.

LICENSED PROFESSIONAL ENGINEER
BENJAMIN W. FLETCHER
24921
OKLAHOMA
8/7/2020

WATERLINE PLAN & PROFILE LINE - 2

PROJECT #144628-W, TMUA-W 18-16

MAINTENANCE ZONE 6028-W
TUPELO CREEK DRAINAGE

CITY OF TULSA, OKLAHOMA
ENGINEERING SERVICES DEPARTMENT

PLANS AND ESTIMATES PREPARED BY:
Meshek & Associates, L.L.C.
1437 S. Boulder Avenue, Suite 1550 Tulsa, OK 74119 (918)392-5620

REVISION	BY	DATE

PLAN SCALE 1" = 20'
PROFILE SCALE
HORIZONTAL: 1" = 20'
VERTICAL: 1" = 5'

DRAWN	SCB	08/20
DESIGNED	BWF	08/20
SURVEY	AB	08/18
PROJ. MGR.		
LEAD ENGR.		
FIELD MGR.		
RECOMMENDED DESIGN MANAGER		

APPROVED:
CITY ENGINEER
DATE:
FILE:
DRAWING:
ATLAS PAGE NO. 235
SHEET 93 OF 181 SHEETS

PROJECT #144628-W, TMUA-W 18-16 MAINTENANCE ZONE 6028-W

PRINT DATE: 08/07/2020 M:\City_of_Tulsa\18TUL02_MZ6028_Tupelo_Creek_Drainage\Design\Drawings\18TUL02_PNP_WATERLINE_116TH.dwg

MATCHLINE STA. 202+20.00

CHEROKEE VILLAGE
BLOCK 2

BREIEN, JACK E JR & KIMBERLEE M
LOT 23
1530

OLUSOGA, SAMELLA JANE AND ADESINMA TAJUDEEN
LOT 24
1524

AMPARAN, FRANCISCO C MELENDEZ
LOT 25
1520

HUD
LOT 26
1514

TURLEY, THERESA LYNN
LOT 27
1510

JAMES, QWATERRACES LAMAR
LOT 1
11532

HAWKINS, HERBERT JR AND ARLENE B
LOT 12
11604

HADDOCK, WILLIAM D & GLENITA R TRUSTEES
HADDOCK FAMILY TRUST
LOT 13
1523

MENDOZA, JAVIER
LOT 14
1529

S. 116TH E. AVE.

E. 15TH ST.

203+00
204+00
205+00
206+00

BM-20028

54.0 LF

FH-9

FH-3

FIRE HYDRANT ASSEMBLY TO INCLUDE:
1 – 6"X6"X6" TEE R.J.
1 – FIRE HYDRANT

FIRE HYDRANT ASSEMBLY TO INCLUDE:
1 – 6"X6"X6" TEE R.J.
1 – FIRE HYDRANT

NOTE:
ALL WATER METERS TO BE A MINIMUM OF 2' INSIDE RIGHT–OF–WAY

BLOCK 2
CHEROKEE VILLAGE

CONSTRUCTION NOTES:

1. CONNECT TO EXISTING WATERLINE
2. PIPE DEFLECTION NOT TO EXCEED 3° ON ANY FITTING OR JOINT
3. REMOVE FIRE HYDRANT
4. REMOVE AND RECONSTRUCT WATER METER, RESTORE SHORT WATER SERVICE
5. REMOVE AND RECONSTRUCT WATER METER, RESTORE LONG WATER SERVICE
6. CUT & PLUG EXISTING WATERLINE
7. REMOVE AND RESET ELECTRICAL BOX
8. REMOVE AND REPLACE EXISTING FENCE (LIKE–KIND)

CAUTION
NATURAL GAS
UNDERGROUND ELECTRIC
WATERLINE
SANITARY SEWER
UNDERGROUND TELEPHONE

0 10 20 40
SCALE IN FEET

LEGEND

- PROPOSED WATER LINE
- PROPOSED FENCE
- C.R.L.
- EXISTING FENCE
- SECTION LINE
- RIGHT–OF–WAY
- LOT LINE / PROPERTY LINE
- EXISTING OVERHEAD ELECTRIC
- EXISTING UNDERGROUND ELECTRIC
- EXISTING GAS LINE
- EXISTING SANITARY SEWER
- EXISTING STORM SEWER
- EXISTING WATER LINE
- EXISTING EASEMENT LINE
- FLOODPLAIN LINE
- BENCHMARK

PROJECT #144628–W, TMUA–W 18–16 MAINTENANCE ZONE 6028–W

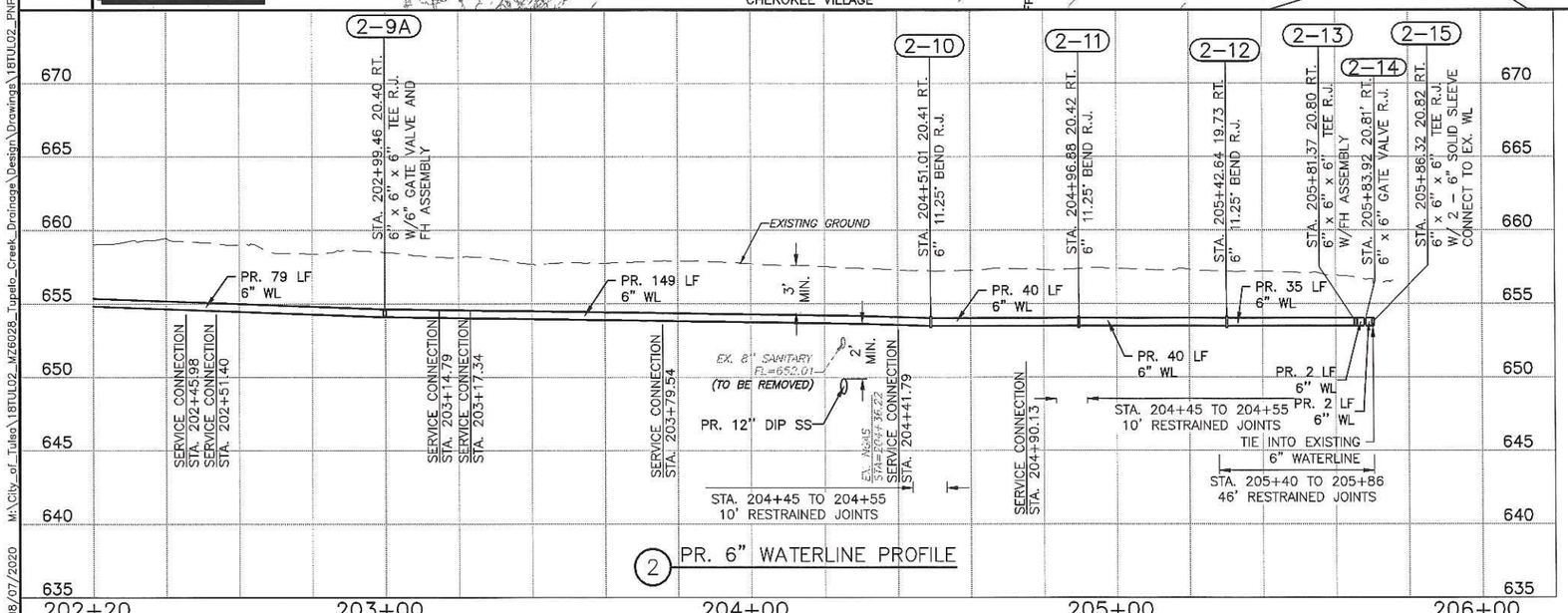

2 PR. 6" WATERLINE PROFILE

FURNISHED AND INSTALLED BY CONTRACTOR

TABLE OF FITTINGS

FITTING NO.	DESCRIPTION	NORTHING	EASTING	STATION	OFFSET
2-9A	6" X 6" X 6" TEE R.J.	422052.96	2603866.38	202+99.46	20.40' RT
2-10	6" 11.25° BEND R.J.	422157.25	2603759.47	204+51.01	20.41' RT
2-11	6" 11.25° BEND R.J.	422191.37	2603737.69	204+96.88	20.42' RT
2-12	6" 11.25° BEND R.J.	422229.70	2603724.69	205+42.64	19.73' RT
2-13	6" X 6" X 6" TEE R.J.	422265.04	2603723.06	205+81.37	20.80' RT
2-14	6" GATE VALVE R.J.	422267.59	2603723.03	205+83.92	20.81' RT
2-15	6" X 6" X 6" TEE R.J.	422269.99	2603723.00	205+86.32	20.82' RT
2-16	6" SOLID SLEEVE R.J.	422270.03	2603725.08	205+86.32	22.90' RT
2-17	6" SOLID SLEEVE R.J.	422269.97	2603720.98	205+86.33	18.80' RT
FH-3	3-WAY FIRE HYDRANT	422265.06	2603727.53	205+81.33	25.27' RT
FH-9	3-WAY FIRE HYDRANT	422056.35	2603870.11	202+99.13	25.43' RT

BENCHMARK
BM–20028
CHISELED "X" SET
N=421813.68
E=2604424.73
EL=662.42

OKIE 811 Know what's below. Call before you dig.

BENJAMIN W. FLETCHER 24921 LICENSED PROFESSIONAL ENGINEER OKLAHOMA

8/7/2020

WATERLINE PLAN & PROFILE LINE – 2

PROJECT #144628–W, TMUA–W 18–16

MAINTENANCE ZONE 6028–W
TUPELO CREEK DRAINAGE

CITY OF TULSA, OKLAHOMA
ENGINEERING SERVICES DEPARTMENT

PLANS AND ESTIMATES PREPARED BY:
Meshek & Associates, L.L.C.
1437 S. Boulder Avenue, Suite 1550 Tulsa, OK 74119 (918)392–5620

REVISION	BY	DATE

PLAN SCALE	DRAWN	SCB	08/20
1" = 20'	DESIGNED	BWF	08/20
	SURVEY	AB	08/18
PROFILE SCALE	PROJ. MGR.		
HORIZONTAL: 1" = 20'	LEAD ENGR.		
	FIELD MGR.		
VERTICAL: 1" = 5'	RECOMMENDED DESIGN MANAGER		
FILE:	DRAWING:		
ATLAS PAGE NO. 235			

APPROVED:

CITY ENGINEER

DATE:

SHEET 94 OF 161 SHEETS

PRINT DATE: 08/07/2020 M:\City_of_Tulsa\18TUL02_WZ6028_Tupelo_Creek_Drainage\Design\Drawings\18TUL02_PNP_WATERLINE_116TH.dwg

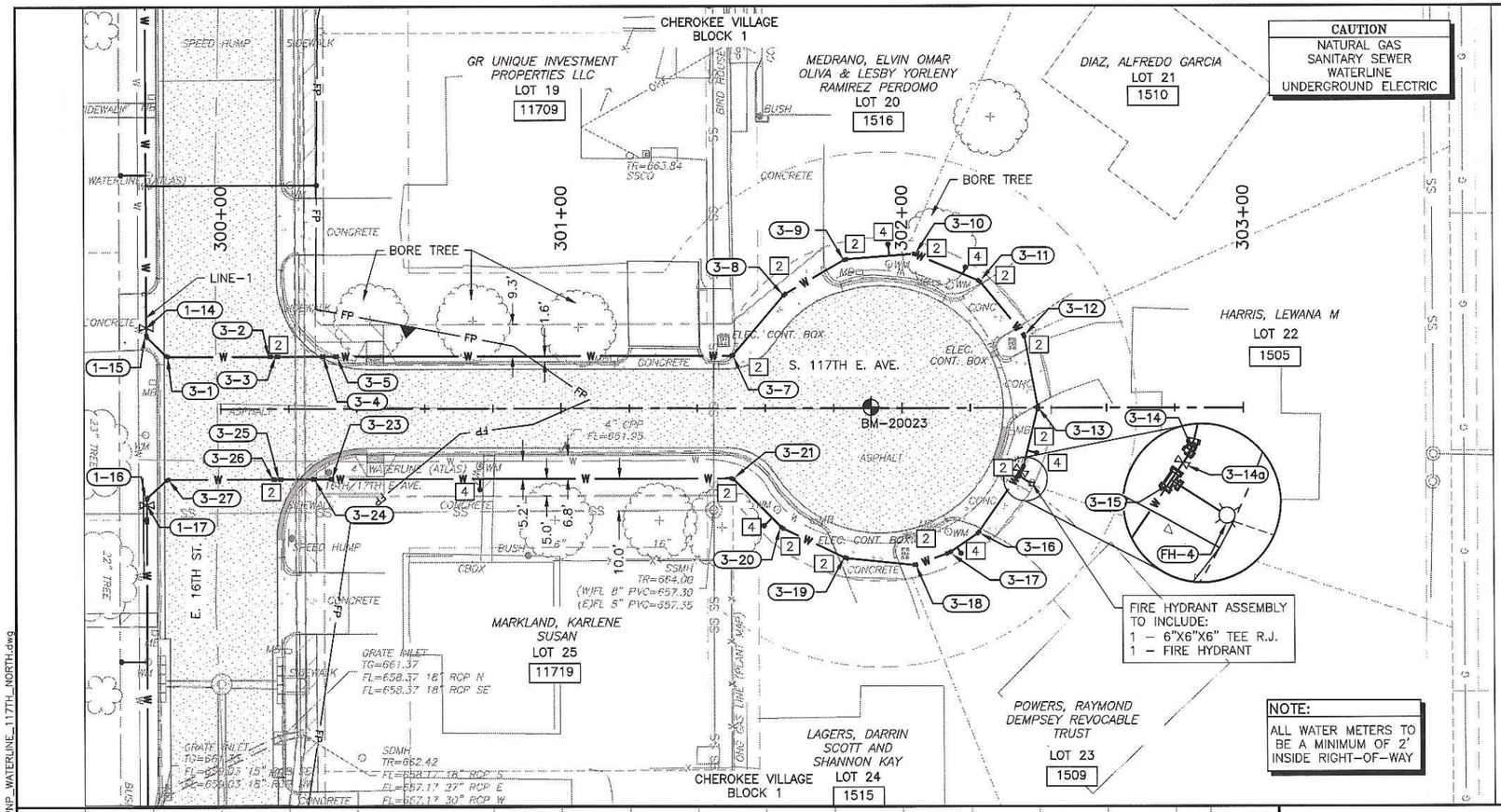

CONSTRUCTION NOTES:

1. CONNECT TO EXISTING WATERLINE
2. PIPE DEFLECTION NOT TO EXCEED 3° ON ANY FITTING OR JOINT
3. REMOVE FIRE HYDRANT
4. REMOVE AND RECONSTRUCT WATER METER, RESTORE SHORT WATER SERVICE
5. REMOVE AND RECONSTRUCT WATER METER, RESTORE LONG WATER SERVICE
6. CUT & PLUG EXISTING WATERLINE
7. REMOVE AND RESET ELECTRICAL BOX
8. REMOVE AND REPLACE EXISTING FENCE (LIKE-KIND)

LEGEND

- PROPOSED WATER LINE
- PROPOSED FENCE
- C.R.L.
- EXISTING FENCE
- SECTION LINE
- RIGHT-OF-WAY
- LOT LINE / PROPERTY LINE
- OHE — EXISTING OVERHEAD ELECTRIC
- UGE — EXISTING UNDERGROUND ELECTRIC
- G — EXISTING GAS LINE
- SS — EXISTING SANITARY SEWER
- EXISTING STORM SEWER
- W — EXISTING WATER LINE
- EXISTING EASEMENT LINE
- FP — FLOODPLAIN LINE
- BENCHMARK

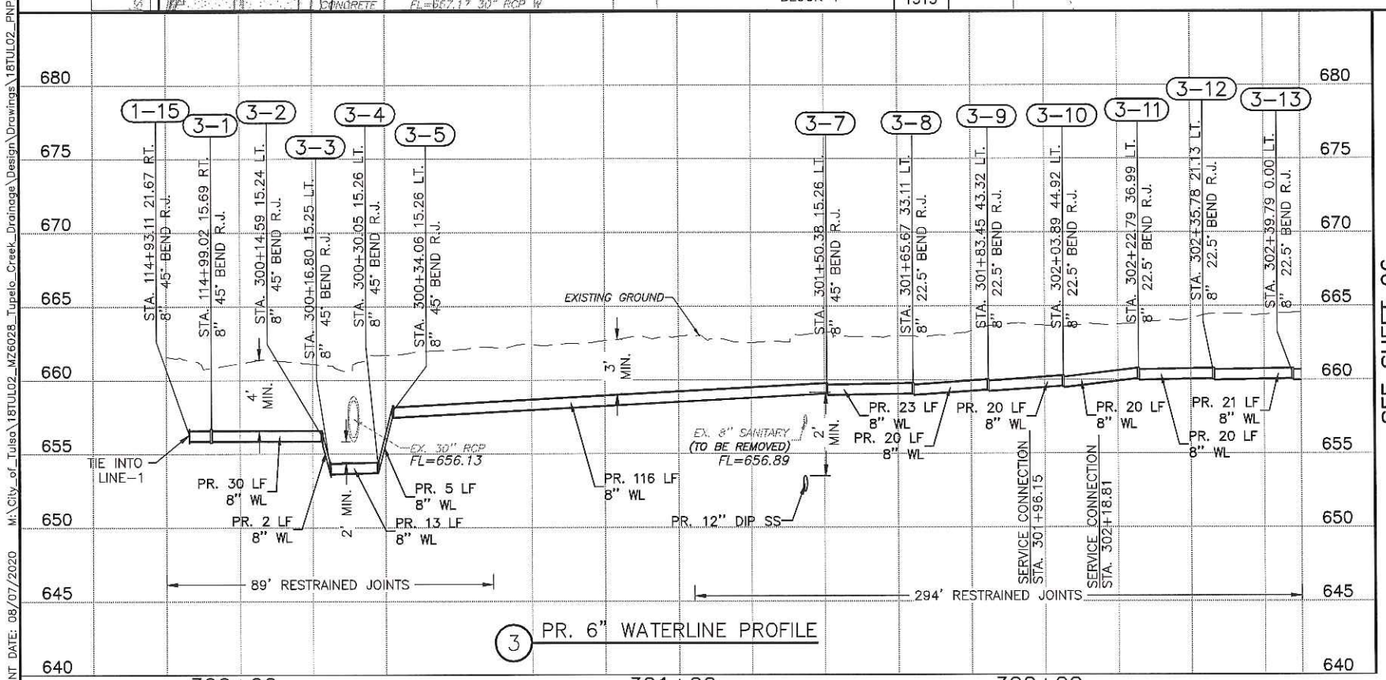

3 PR. 6" WATERLINE PROFILE

SEE SHEET 96 FOR THE REMAINING OF LINE 3

FURNISHED AND INSTALLED BY CONTRACTOR

TABLE OF FITTINGS

FITTING NO.	DESCRIPTION	NORTHING	EASTING	STATION	OFFSET
3-1	6" GATE VALVE R.J.	421781.69	2604269.24	114+99.02	11.51' RT
3-2	6" 45° BEND R.J.	421807.80	2604268.71	300+14.59	15.24' LT
3-3	6" 45° BEND R.J.	421810.01	2604268.67	300+16.80	15.25' LT
3-4	6" 45° BEND R.J.	421823.26	2604268.40	300+30.05	15.26' LT
3-5	6" 45° BEND R.J.	421827.26	2604268.32	300+34.06	15.26' LT
3-7	6" 45° BEND R.J.	421943.56	2604266.07	301+50.38	15.26' LT
3-8	6" 22.50° BEND R.J.	421958.51	2604247.93	301+65.67	33.11' LT
3-9	6" 22.50° BEND R.J.	421976.09	2604237.38	301+83.45	43.32' LT
3-10	6" 22.50° BEND R.J.	421996.49	2604235.37	302+03.89	44.92' LT
3-11	6" 22.50° BEND R.J.	422015.54	2604242.94	302+22.79	36.99' LT
3-12	6" 22.50° BEND R.J.	422028.83	2604258.55	302+35.78	21.13' LT
3-13	6" 22.50° BEND R.J.	422033.25	2604279.59	302+39.79	0.00'

BENCHMARK
BM-20023
PK NAIL SET
N=421984.48
E=2604280.30
EL=663.74

OKIE811 Know what's below. Call before you dig.

LICENSED PROFESSIONAL ENGINEER BENJAMIN W. FLETCHER 24921 OKLAHOMA

8/7/2020

WATERLINE PLAN & PROFILE LINE-3

PROJECT #144628-W, TMUA-W 18-16

MAINTENANCE ZONE 6028-W
TUPELO CREEK DRAINAGE

CITY OF TULSA, OKLAHOMA
ENGINEERING SERVICES DEPARTMENT

PLANS AND ESTIMATES PREPARED BY:
Meshek & Associates, L.L.C.
1437 S. Boulder Avenue, Suite 1550 Tulsa, OK 74119 (918)392-5820

REVISION	BY	DATE

PLAN SCALE 1" = 20'	DRAWN	SCB	08/20
	DESIGNED	BWF	08/20
	SURVEY	AB	08/18
PROFILE SCALE	PROJ. MGR.		
HORIZONTAL: 1" = 20'	LEAD ENGR.		
	FIELD MGR.		
VERTICAL: 1" = 5'	RECOMMENDED DESIGN MANAGER		
FILE:	DRAWING:		
ATLAS PAGE NO. 235			

APPROVED:
CITY ENGINEER
DATE:
SHEET 95 OF 161 SHEETS

PROJECT #144628-W, TMUA-W 18-16 MAINTENANCE ZONE 6028-W

PRINT DATE: 08/07/2020 M:\City_of_Tulsa\18TUL02_MZ6028_Tupelo_Creek_Drainage\Design\Drawings\18TUL02_PNP_WATERLINE_117TH_NORTH.dwg

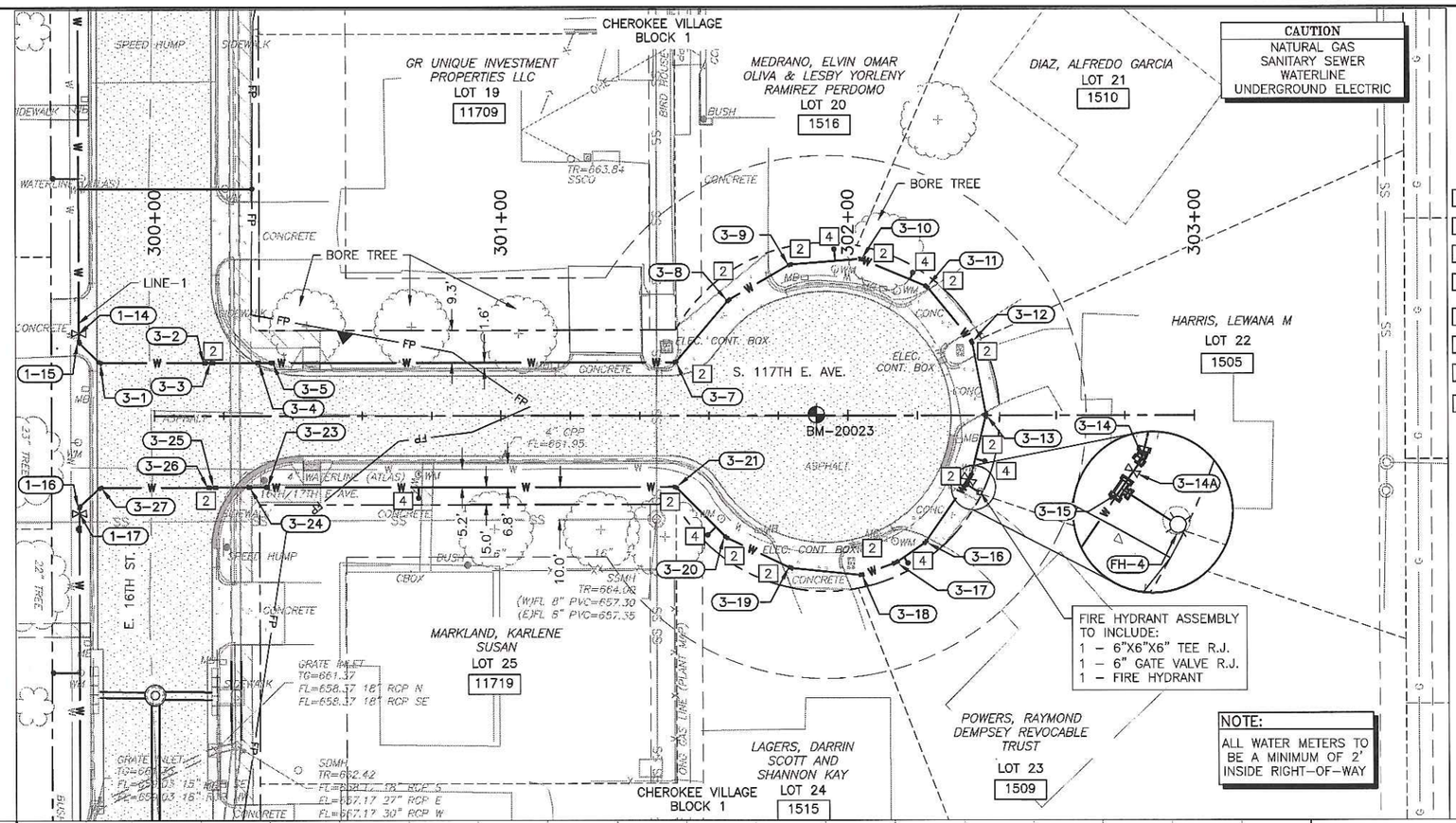

CONSTRUCTION NOTES:

1. CONNECT TO EXISTING WATERLINE
2. PIPE DEFLECTION NOT TO EXCEED 3° ON ANY FITTING OR JOINT
3. REMOVE FIRE HYDRANT
4. REMOVE AND RECONSTRUCT WATER METER, RESTORE SHORT WATER SERVICE
5. REMOVE AND RECONSTRUCT WATER METER, RESTORE LONG WATER SERVICE
6. CUT & PLUG EXISTING WATERLINE
7. REMOVE AND RESET ELECTRICAL BOX
8. REMOVE AND REPLACE EXISTING FENCE (LIKE-KIND)

LEGEND

- PROPOSED WATER LINE
- PROPOSED FENCE
- C.R.L.
- EXISTING FENCE
- SECTION LINE
- RIGHT-OF-WAY
- LOT LINE / PROPERTY LINE
- EXISTING OVERHEAD ELECTRIC
- EXISTING UNDERGROUND ELECTRIC
- EXISTING GAS LINE
- EXISTING SANITARY SEWER
- EXISTING STORM SEWER
- EXISTING WATER LINE
- EXISTING EASEMENT LINE
- FLOODPLAIN LINE
- BENCHMARK

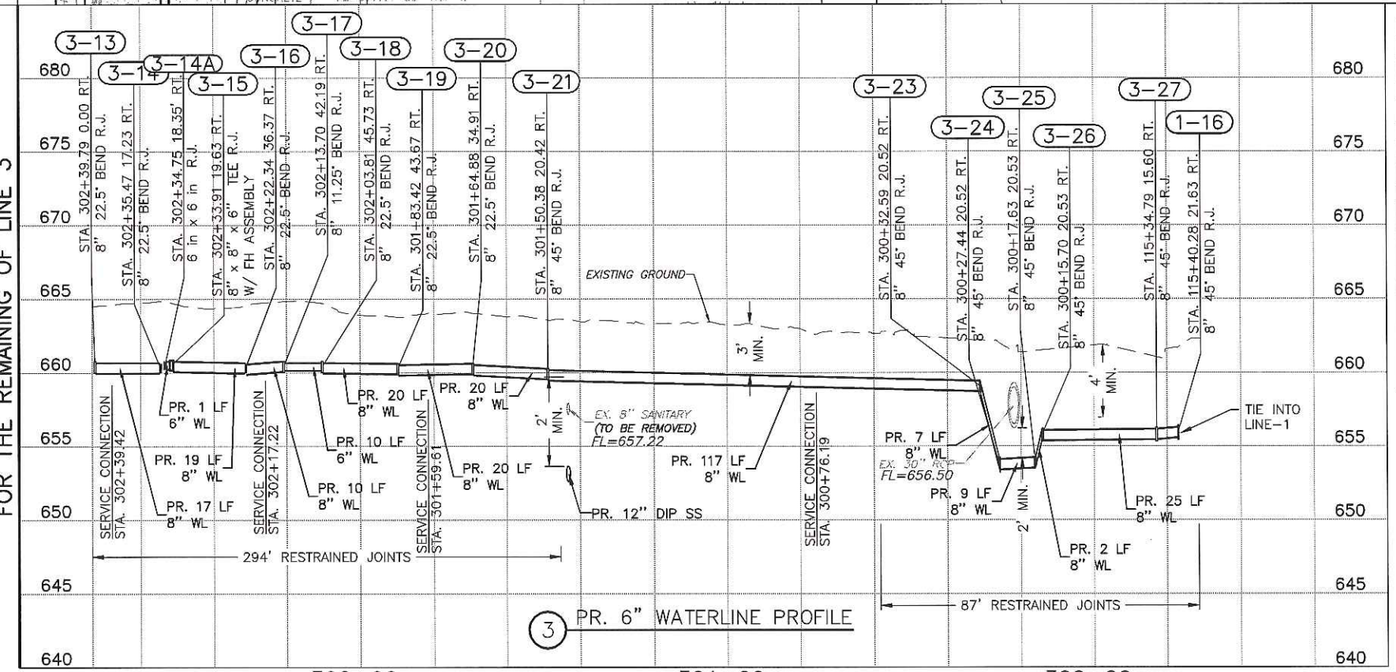

3 PR. 6" WATERLINE PROFILE

FURNISHED AND INSTALLED BY CONTRACTOR

TABLE OF FITTINGS

FITTING NO.	DESCRIPTION	NORTHING	EASTING	STATION	OFFSET
3-13	8" 22.50° BEND R.J.	422033.25	2604279.59	302+39.79	0.00
3-14	8" 22.50° BEND R.J.	422029.27	2604296.91	302+35.47	17.23' RT
3-14A	8"GATE VALVE R.J.	422028.57	2604298.04	302+34.75	18.35' RT
3-15	8" X 8" X 6" TEE R.J.	422027.76	2604299.33	302+33.91	19.63' RT
3-16	8" 22.50° BEND R.J.	422016.51	2604316.30	302+22.34	36.37' RT
3-17	8" 11.25° BEND R.J.	422007.98	2604322.28	302+13.70	42.19' RT
3-18	8" 22.50° BEND R.J.	421998.17	2604326.01	302+03.81	45.73' RT
3-19	8" 22.50° BEND R.J.	421977.74	2604324.35	301+83.42	43.67' RT
3-20	8" 22.50° BEND R.J.	421959.04	2604315.94	301+64.88	34.91' RT
3-21	8" 45° BEND R.J.	421944.25	2604301.74	301+50.38	20.42' RT
3-23	8" 45° BEND R.J.	421826.49	2604304.12	300+32.59	20.52' RT
3-24	8" 45° BEND R.J.	421821.34	2604304.23	300+27.44	20.52' RT
3-25	8" 45° BEND R.J.	421811.53	2604304.42	300+17.63	20.53' RT
3-26	8" 45° BEND R.J.	421809.60	2604304.46	300+15.70	20.53' RT
3-27	8" 45° BEND R.J.	421778.33	2604305.09	115+34.79	15.60' RT

BENCHMARK
BM-20023
PK NAIL SET
N=421984.48
E=2604280.30
EL=663.74

OKIE 811 Know what's below. Call before you dig.

WATERLINE PROFILE LINE-3

PROJECT #144628-W, TMUA-W 18-16

MAINTENANCE ZONE 6028-W
TUPELO CREEK DRAINAGE

CITY OF TULSA, OKLAHOMA
ENGINEERING SERVICES DEPARTMENT

LICENSED PROFESSIONAL ENGINEER BENJAMIN W. FLETCHER PE 24921 OKLAHOMA

8/7/2020

PLANS AND ESTIMATES PREPARED BY:
Meshek & Associates, L.L.C.
1437 S. Boulder Avenue, Suite 1550 Tulsa, OK 74119 (918)392-5620

REVISION	BY	DATE

PLAN SCALE 1" = 20'	DRAWN	SCB	08/20
	DESIGNED	BWF	08/20
	SURVEY	AB	08/18
PROFILE SCALE	PROJ. MGR.		
HORIZONTAL: 1" = 20'	LEAD ENGR.		
	FIELD MGR.		
VERTICAL: 1" = 5'	RECOMMENDED DESIGN MANAGER		
FILE:	DRAWING:		
ATLAS PAGE NO. 235			

APPROVED:

CITY ENGINEER

DATE:

SHEET 96 OF 161 SHEETS

PROJECT #144628-W, TMUA-W 18-16 MAINTENANCE ZONE 6028-W

PRINT DATE: 08/07/2020 M:\City_of_Tulsa\18TUL02_MZ6028_Tupelo_Creek_Drainage\Design\Drawings\18TUL02_PNP_WATERLINE_117TH_NORTH.dwg

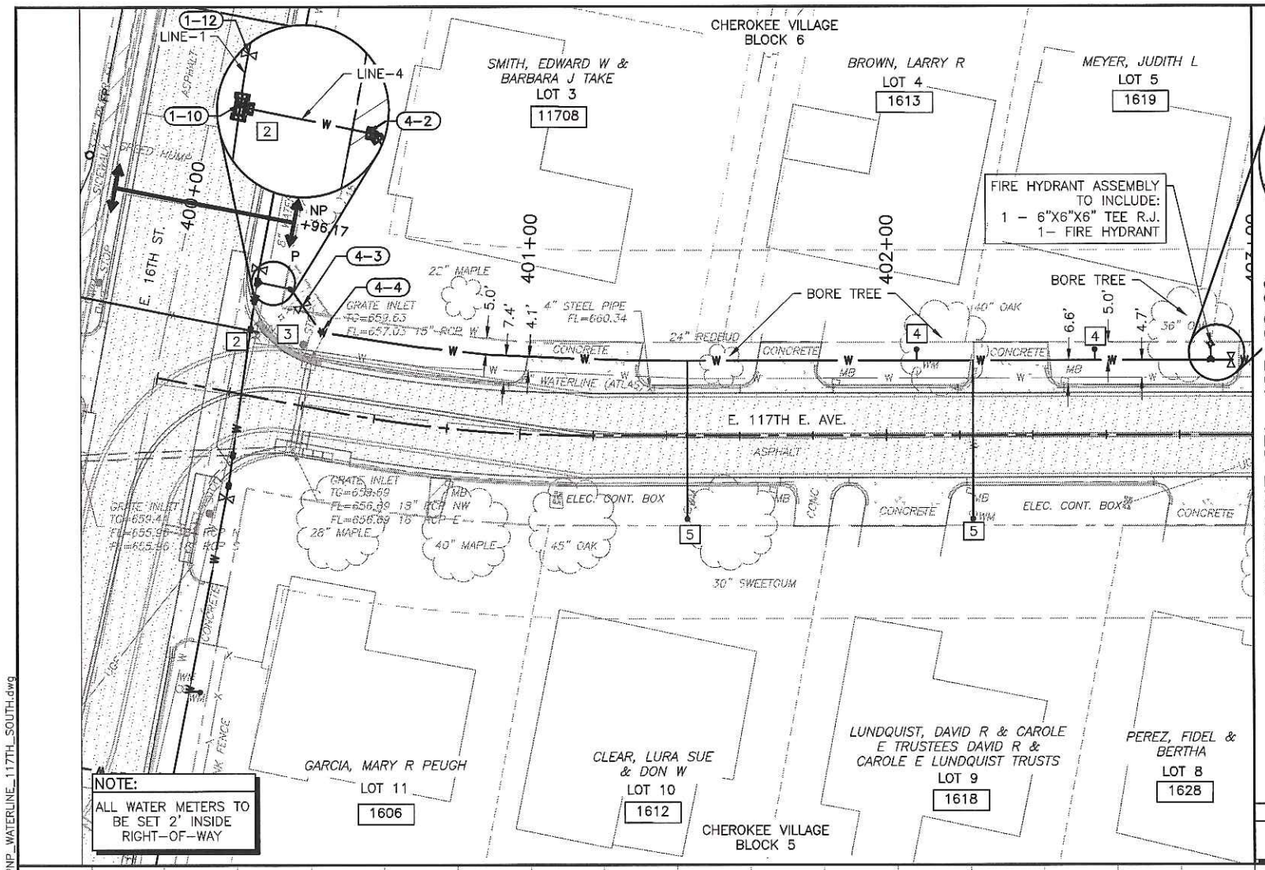

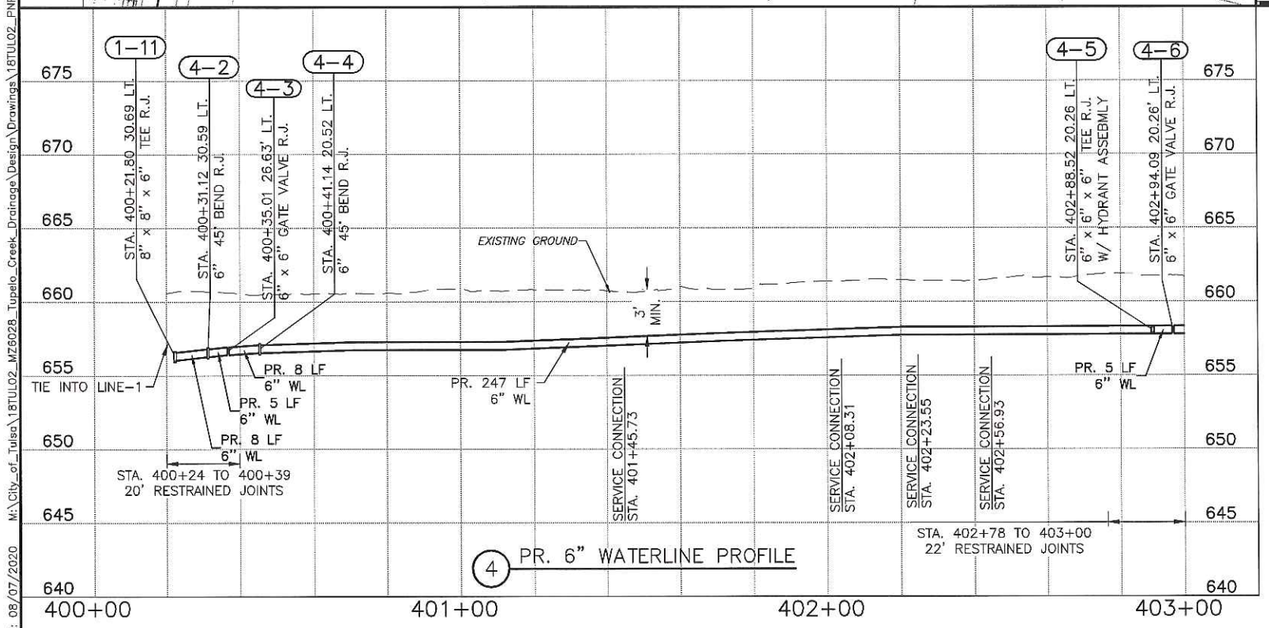

4 PR. 6" WATERLINE PROFILE

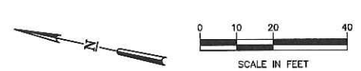

CONSTRUCTION NOTES:

1. CONNECT TO EXISTING WATERLINE
2. PIPE DEFLECTION NOT TO EXCEED 3° ON ANY FITTING OR JOINT
3. REMOVE FIRE HYDRANT
4. REMOVE AND RECONSTRUCT WATER METER, RESTORE SHORT WATER SERVICE
5. REMOVE AND RECONSTRUCT WATER METER, RESTORE LONG WATER SERVICE
6. CUT & PLUG EXISTING WATERLINE
7. REMOVE AND RESET ELECTRICAL BOX
8. REMOVE AND REPLACE EXISTING FENCE (LIKE-KIND)

LEGEND

- PROPOSED WATER LINE
- PROPOSED FENCE
- C.R.L.
- EXISTING FENCE
- SECTION LINE
- RIGHT-OF-WAY
- LOT LINE / PROPERTY LINE
- EXISTING OVERHEAD ELECTRIC
- EXISTING UNDERGROUND ELECTRIC
- EXISTING GAS LINE
- EXISTING SANITARY SEWER
- EXISTING STORM SEWER
- EXISTING WATER LINE
- EXISTING EASEMENT LINE
- FLOODPLAIN LINE
- BENCHMARK

FURNISHED AND INSTALLED BY CONTRACTOR

TABLE OF FITTINGS

FITTING NO.	DESCRIPTION	NORTHING	EASTING	STATION	OFFSET
4-2	6" 45° BEND R.J.	421759.61	2604149.66	400+31.12	30.59' LT
4-3	6" GATE VALVE R.J.	421755.64	2604145.78	400+35.01	26.63' LT
4-4	6" 45° BEND R.J.	421749.39	2604139.80	400+41.14	20.52' LT
4-5	6" X 6" X 6" TEE R.J.	421510.30	2604183.38	402+88.52	20.26' LT
4-6	6" GATE VALVE R.J.	421504.86	2604184.55	402+94.09	20.26' LT
FH-5	3-WAY FIRE HYDRANT	421511.26	2604187.57	402+88.47	24.56' LT

OKIE 811 Know what's below. Call before you dig.

LICENSED PROFESSIONAL ENGINEER BENJAMIN W. FLETCHER 24921 OKLAHOMA

8/7/2020

WATERLINE PLAN & PROFILE LINE – 4

PROJECT #144628–W, TMUA–W 18–16

MAINTENANCE ZONE 6028–W
TUPELO CREEK DRAINAGE

CITY OF TULSA, OKLAHOMA
ENGINEERING SERVICES DEPARTMENT

PLANS AND ESTIMATES PREPARED BY:
Meshek & Associates, L.L.C.
1437 S. Boulder Avenue, Suite 1550 Tulsa, OK 74119 (918)392-5620

REVISION	BY	DATE

PLAN SCALE 1" = 20'	DRAWN	SCB	08/20
	DESIGNED	BWF	08/20
	SURVEY	AB	08/18
PROFILE SCALE	PROJ. MGR.		
HORIZONTAL: 1" = 20'	LEAD ENGR.		
	FIELD MGR.		
VERTICAL: 1" = 5'	RECOMMENDED DESIGN MANAGER		
FILE:	DRAWING:		
ATLAS PAGE NO. 235			

APPROVED:

CITY ENGINEER

DATE:

SHEET 97 OF 181 SHEETS

PROJECT #144628–W, TMUA–W 18–16 MAINTENANCE ZONE 6028–W

PRINT DATE: 08/07/2020 M:\City_of_Tulsa\18TUL02_MZ6028_Tupelo_Creek_Drainage\Design\Drawings\18TUL02_PNP_WATERLINE_117TH_SOUTH.dwg

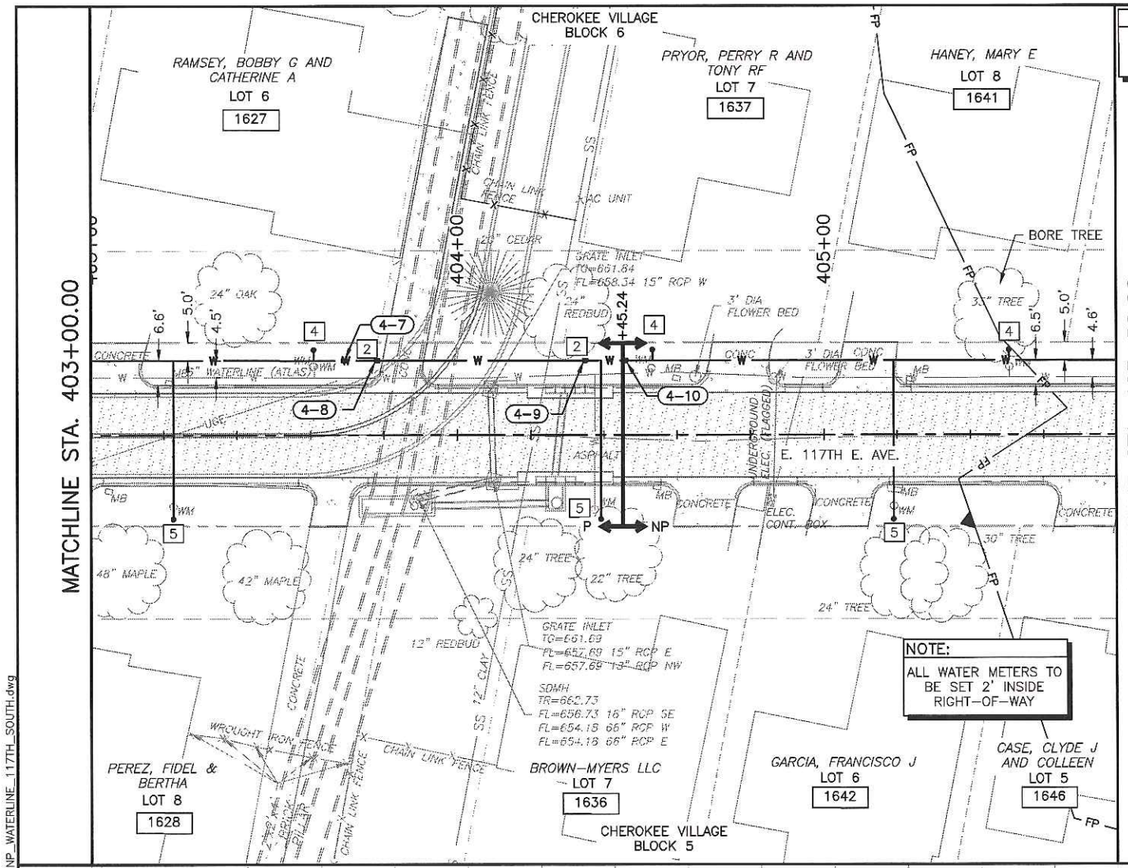

NOTE:
ALL WATER METERS TO BE SET 2' INSIDE RIGHT-OF-WAY

CAUTION
SANITARY SEWER
UNDERGROUND ELECTRIC
WATERLINE

N

0 10 20 40
SCALE IN FEET

CONSTRUCTION NOTES:

1. CONNECT TO EXISTING WATERLINE
2. PIPE DEFLECTION NOT TO EXCEED 3° ON ANY FITTING OR JOINT
3. REMOVE FIRE HYDRANT
4. REMOVE AND RECONSTRUCT WATER METER, RESTORE SHORT WATER SERVICE
5. REMOVE AND RECONSTRUCT WATER METER, RESTORE LONG WATER SERVICE
6. CUT & PLUG EXISTING WATERLINE
7. REMOVE AND RESET ELECTRICAL BOX
8. REMOVE AND REPLACE EXISTING FENCE (LIKE-KIND)

LEGEND

- PROPOSED WATER LINE
- PROPOSED FENCE
- C.R.L.
- EXISTING FENCE
- SECTION LINE
- RIGHT-OF-WAY
- LOT LINE / PROPERTY LINE
- EXISTING OVERHEAD ELECTRIC
- EXISTING UNDERGROUND ELECTRIC
- EXISTING GAS LINE
- EXISTING SANITARY SEWER
- EXISTING STORM SEWER
- EXISTING WATER LINE
- EXISTING EASEMENT LINE
- FLOODPLAIN LINE
- BENCHMARK

FURNISHED AND INSTALLED BY CONTRACTOR

TABLE OF FITTINGS

FITTING NO.	DESCRIPTION	NORTHING	EASTING	STATION	OFFSET
4-7	6" 45° BEND R.J.	421431.48	2604200.38	403+69.15	20.24' LT
4-8	6" 45° BEND R.J.	421422.65	2604202.28	403+78.19	20.23' LT
4-9	6" 45° BEND R.J.	421367.17	2604214.25	404+34.94	20.22' LT
4-10	6" 45° BEND R.J.	421356.43	2604216.57	404+45.93	20.21' LT

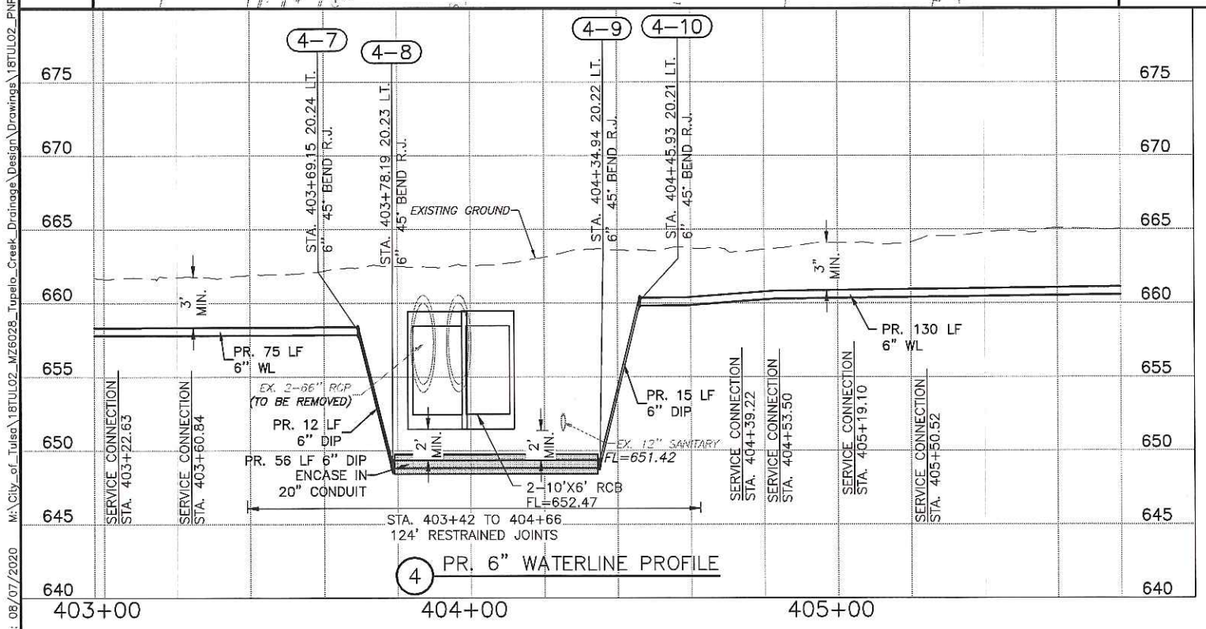

4 PR. 6" WATERLINE PROFILE

OKIE 811 Know what's below. Call before you dig.

LICENSED PROFESSIONAL ENGINEER BENJAMIN W. FLETCHER 24921 OKLAHOMA

8/7/2020

WATERLINE PLAN & PROFILE LINE - 4

PROJECT #144628-W, TMUA-W 18-16

MAINTENANCE ZONE 6028-W
TUPELO CREEK DRAINAGE

CITY OF TULSA, OKLAHOMA
ENGINEERING SERVICES DEPARTMENT

PLANS AND ESTIMATES PREPARED BY:
Meshek & Associates, L.L.C.
1437 S. Boulder Avenue, Suite 1550 Tulsa, OK 74119 (918)392-5620

REVISION	BY	DATE

PLAN SCALE	DRAWN	SCB	08/20
1" = 20'	DESIGNED	BWF	08/20
	SURVEY	AB	08/18
PROFILE SCALE	PROJ. MGR.		
HORIZONTAL: 1" = 20'	LEAD ENGR.		
	FIELD MGR.		
VERTICAL: 1" = 5'	RECOMMENDED DESIGN MANAGER		
FILE:	DRAWING:		
ATLAS PAGE NO. 235			

APPROVED:

CITY ENGINEER

DATE:

SHEET 98 OF 161 SHEETS

PROJECT #144628-W, TMUA-W 18-16 MAINTENANCE ZONE 6028-W

PRINT DATE: 08/07/2020 M:\City_of_Tulsa\18TUL02_MZ6028_Tupelo_Creek_Drainage\Design\Drawings\18TUL02_PNP_WATERLINE_117TH_SOUTH.dwg

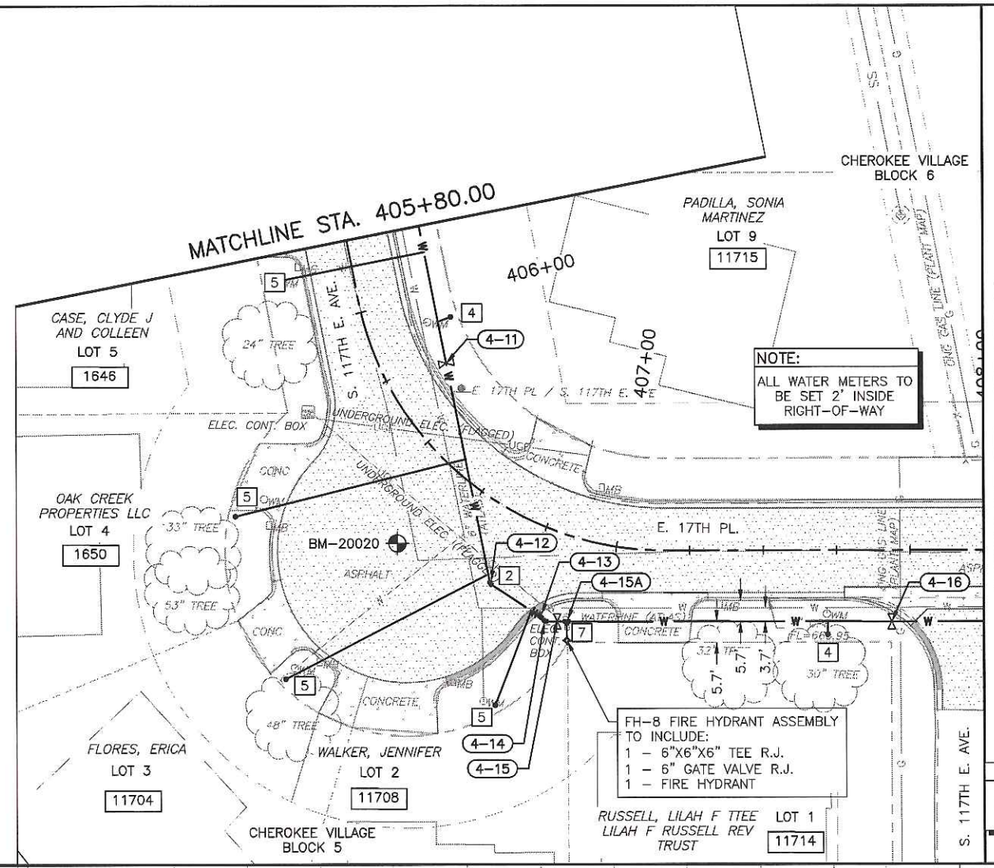

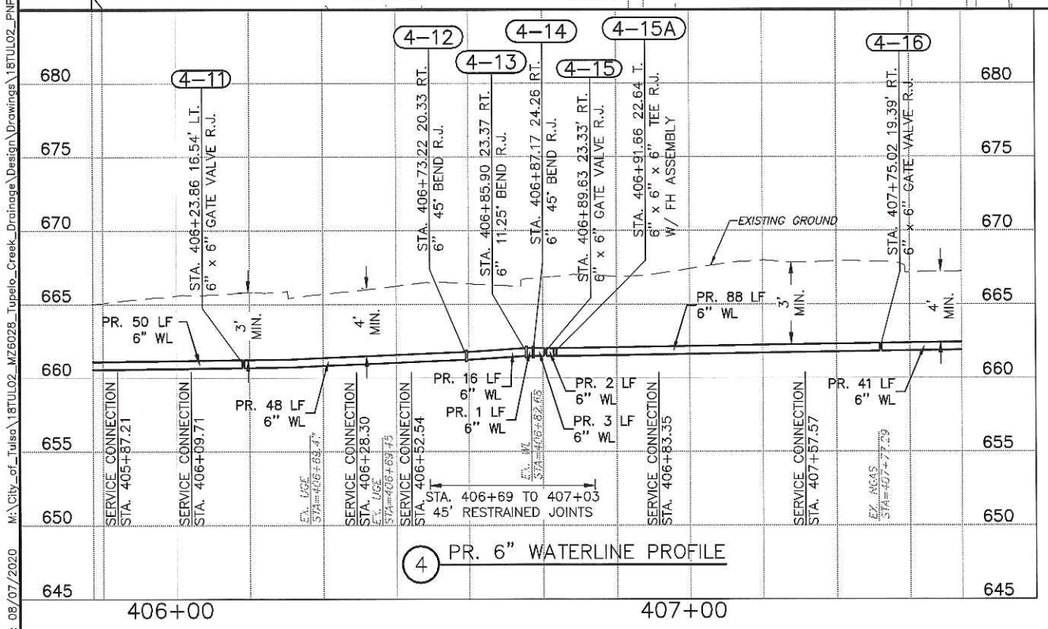

4 PR. 6" WATERLINE PROFILE

CONSTRUCTION NOTES:

1. CONNECT TO EXISTING WATERLINE
2. PIPE DEFLECTION NOT TO EXCEED 3° ON ANY FITTING OR JOINT
3. REMOVE FIRE HYDRANT
4. REMOVE AND RECONSTRUCT WATER METER, RESTORE SHORT WATER SERVICE
5. REMOVE AND RECONSTRUCT WATER METER, RESTORE LONG WATER SERVICE
6. CUT & PLUG EXISTING WATERLINE
7. REMOVE AND RESET ELECTRICAL BOX
8. REMOVE AND REPLACE EXISTING FENCE (LIKE-KIND)

LEGEND

- PROPOSED WATER LINE
- PROPOSED FENCE
- C.R.L.
- EXISTING FENCE
- SECTION LINE
- RIGHT-OF-WAY
- LOT LINE / PROPERTY LINE
- EXISTING OVERHEAD ELECTRIC
- EXISTING UNDERGROUND ELECTRIC
- EXISTING GAS LINE
- EXISTING SANITARY SEWER
- EXISTING STORM SEWER
- EXISTING WATER LINE
- EXISTING EASEMENT LINE
- FLOODPLAIN LINE
- BENCHMARK

N

0 10 20 40
SCALE IN FEET

PROJECT #144628-W, TMUA-W 18-16 MAINTENANCE ZONE 6028-W

FURNISHED AND INSTALLED BY CONTRACTOR					
TABLE OF FITTINGS					
FITTING NO.	DESCRIPTION	NORTHING	EASTING	STATION	OFFSET
4-11	6" GATE VALVE R.J.	421188.17	2604252.87	406+23.86	16.54' LT
4-12	6" 45° BEND R.J.	421128.52	2604265.73	406+73.22	20.33' RT
4-13	6" 11.25° BEND R.J.	421119.85	2604279.43	406+85.90	23.37' RT
4-14	6" 45° BEND R.J.	421118.53	2604280.73	406+87.17	24.26' RT
4-15	6" GATE VALVE R.J.	421118.58	2604284.02	406+89.63	23.33' RT
4-15A	6" X 6" X 6" TEE R.J.	421118.63	2604286.69	406+91.66	22.64' RT
4-16	6" GATE VALVE R.J.	421120.09	2604375.45	407+75.02	19.39' RT
FH-8	3-WAY FIRE HYDRANT	421113.46	2604286.80	406+92.65	27.65' RT

BENCHMARK
BM-20020
PK NAIL SET
N=421139.06
E=2604240.39
EL=666.65

OKIE 811 Know what's below. Call before you dig.

LICENSED PROFESSIONAL ENGINEER
BENJAMIN W. FLETCHER
24921
OKLAHOMA

8/7/2020

WATERLINE PLAN & PROFILE LINE - 4

PROJECT #144628-W, TMUA-W 18-16

MAINTENANCE ZONE 6028-W
TUPELO CREEK DRAINAGE

CITY OF TULSA, OKLAHOMA
ENGINEERING SERVICES DEPARTMENT

PLANS AND ESTIMATES PREPARED BY:
Meshek & Associates, L.L.C.
1437 S. Boulder Avenue, Suite 1550 Tulsa, OK 74119 (918)392-5620

REVISION	BY	DATE

PLAN SCALE 1" = 20'	DRAWN	SCB	08/20
	DESIGNED	BWF	08/20
	SURVEY	AB	08/18
PROFILE SCALE	PROJ. MGR.		
HORIZONTAL: 1" = 20'	LEAD ENGR.		
	FIELD MGR.		
VERTICAL: 1" = 5'	RECOMMENDED DESIGN MANAGER		
FILE:	DRAWING:		
ATLAS PAGE NO. 235			

APPROVED:
CITY ENGINEER
DATE:
SHEET 99 OF 161 SHEETS

PRINT DATE: 08/07/2020
M:\City_of_Tulsa\18TUL02_MZ6028_Tupelo_Creek_Drainage\Design\Drawings\18TUL02_PNP_WATERLINE_117TH_SOUTH.dwg

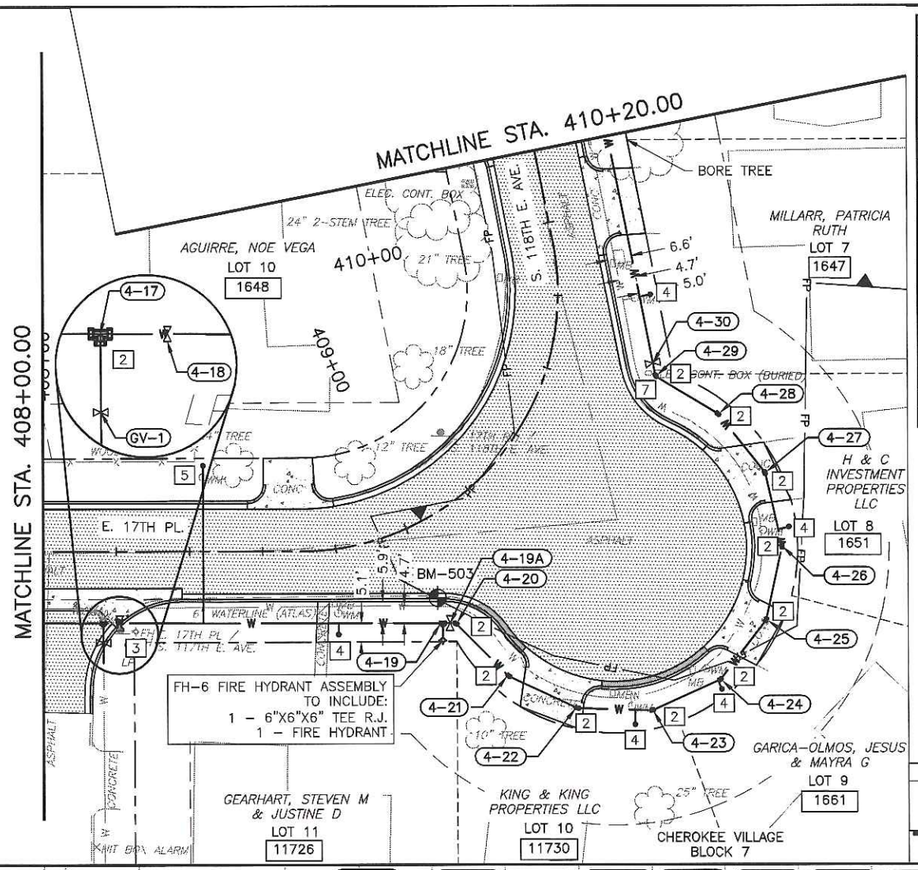

FURNISHED AND INSTALLED BY CONTRACTOR					
TABLE OF FITTINGS					
FITTING NO.	DESCRIPTION	NORTHING	EASTING	STATION	OFFSET
4-17	6" X 6" X 6" TEE R.J.	421120.78	2604416.85	408+16.42	19.45' RT
4-18	6" GATE VALVE R.J.	421120.85	2604421.40	408+20.98	19.46' RT
4-19	6" X 6" X 6" TEE R.J.	421122.30	2604509.46	408+99.02	27.45' RT
4-19A	6" GATE VALVE R.J.	421122.34	2604511.46	409+00.33	28.26' RT
4-20	6" 45° BEND R.J.	421122.36	2604512.90	409+01.26	28.87' RT
4-21	6" 22.50° BEND R.J.	421108.21	2604527.73	409+05.47	48.30' RT
4-22	6" 22.50° BEND R.J.	421099.83	2604546.44	409+11.77	65.35' RT
4-23	6" 22.50° BEND R.J.	421099.58	2604566.94	409+19.69	78.15' RT
4-24	6" 22.50° BEND R.J.	421108.19	2604585.54	409+28.59	85.14' RT
4-25	6" 22.50° BEND R.J.	421124.59	2604597.84	409+37.86	84.81' RT
4-26	6" 22.50° BEND R.J.	421144.69	2604601.88	409+46.82	78.13' RT
4-27	6" 22.50° BEND R.J.	421164.57	2604596.91	409+54.86	65.65' RT
4-28	6" 22.50° BEND R.J.	421180.38	2604583.86	409+60.99	48.41' RT
4-29	6" 45° BEND R.J.	421190.37	2604566.41	409+64.60	29.10' RT
4-30	6" GATE VALVE R.J.	421193.89	2604565.65	409+66.95	27.67' RT
FH-6	3-WAY FIRE HYDRANT	421117.62	2604509.57	408+97.77	31.79' RT
GV-1	6" GATE VALVE R.J.	421115.46	2604416.95	408+16.43	24.77' RT

NOTE:
ALL WATER METERS TO BE SET 2' INSIDE RIGHT-OF-WAY

CAUTION
NATURAL GAS
UNDERGROUND ELECTRIC
WATERLINE

CONSTRUCTION NOTES:

1. CONNECT TO EXISTING WATERLINE
2. PIPE DEFLECTION NOT TO EXCEED 3° ON ANY FITTING OR JOINT
3. REMOVE FIRE HYDRANT
4. REMOVE AND RECONSTRUCT WATER METER, RESTORE SHORT WATER SERVICE
5. REMOVE AND RECONSTRUCT WATER METER, RESTORE LONG WATER SERVICE
6. CUT & PLUG EXISTING WATERLINE
7. REMOVE AND RESET ELECTRICAL BOX
8. REMOVE AND REPLACE EXISTING FENCE (LIKE-KIND)

N

0 10 20 40
SCALE IN FEET

LEGEND

- PROPOSED WATER LINE
- PROPOSED FENCE
- C.R.L.
- EXISTING FENCE
- SECTION LINE
- RIGHT-OF-WAY
- LOT LINE / PROPERTY LINE
- OHE — EXISTING OVERHEAD ELECTRIC
- UGE — EXISTING UNDERGROUND ELECTRIC
- G — EXISTING GAS LINE
- SS — EXISTING SANITARY SEWER
- EXISTING STORM SEWER
- W — EXISTING WATER LINE
- EXISTING EASEMENT LINE
- FP — FLOODPLAIN LINE
- BENCHMARK

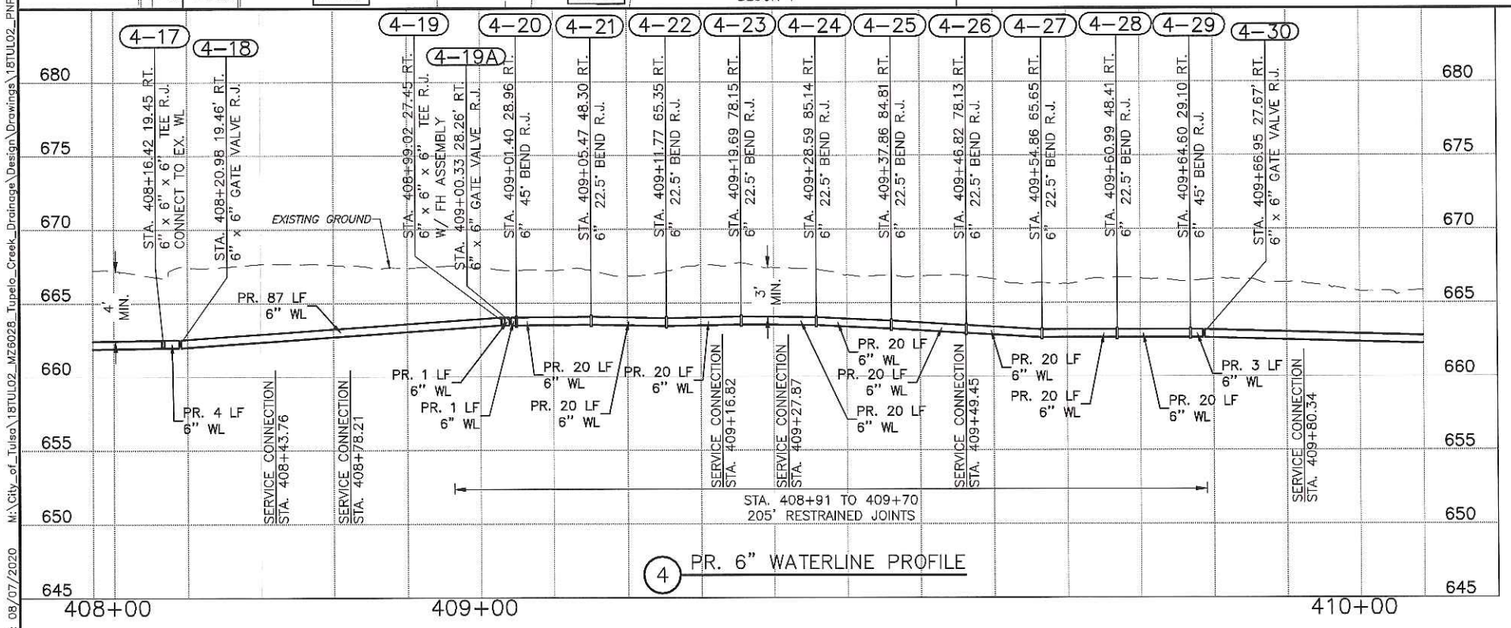

4 PR. 6" WATERLINE PROFILE

BENCHMARK
BM-503
CHISELED "X" SET
N=421129.1260'
E=2604508.1310'
EL=666.88

OKIE 811 Know what's below. Call before you dig.

B. Fletcher

LICENSED PROFESSIONAL ENGINEER
BENJAMIN W. FLETCHER
24921
OKLAHOMA

8/7/2020

WATERLINE PLAN & PROFILE
LINE - 4

PROJECT #144628-W, TMUA-W 18-16

MAINTENANCE ZONE 6028-W
TUPELO CREEK DRAINAGE

CITY OF TULSA, OKLAHOMA
ENGINEERING SERVICES DEPARTMENT

PLANS AND ESTIMATES PREPARED BY:
Meshek & Associates, L.L.C.
1437 S. Boulder Avenue, Suite 1550 Tulsa, OK 74119 (918)392-5620

REVISION	BY	DATE

PLAN SCALE: 1" = 20'
PROFILE SCALE: HORIZONTAL: 1" = 20' VERTICAL: 1" = 5'

DRAWN	SCB	08/20
DESIGNED	BWF	08/20
SURVEY	AB	08/18
PROJ. MGR.		
LEAD ENGR.		
FIELD MGR.		
RECOMMENDED DESIGN MANAGER		
FILE:	DRAWING:	

APPROVED:
CITY ENGINEER
DATE:
ATLAS PAGE NO. 235
SHEET 100 OF 161 SHEETS

PROJECT #144628-W, TMUA-W 18-16 MAINTENANCE ZONE 6028-W

PRINT DATE: 08/07/2020 M:\City_of_Tulsa\18TUL02_MZ6028_Tupelo_Creek_Drainage\Design\Drawings\18TUL02_PNP_WATERLINE_117TH_SOUTH.dwg

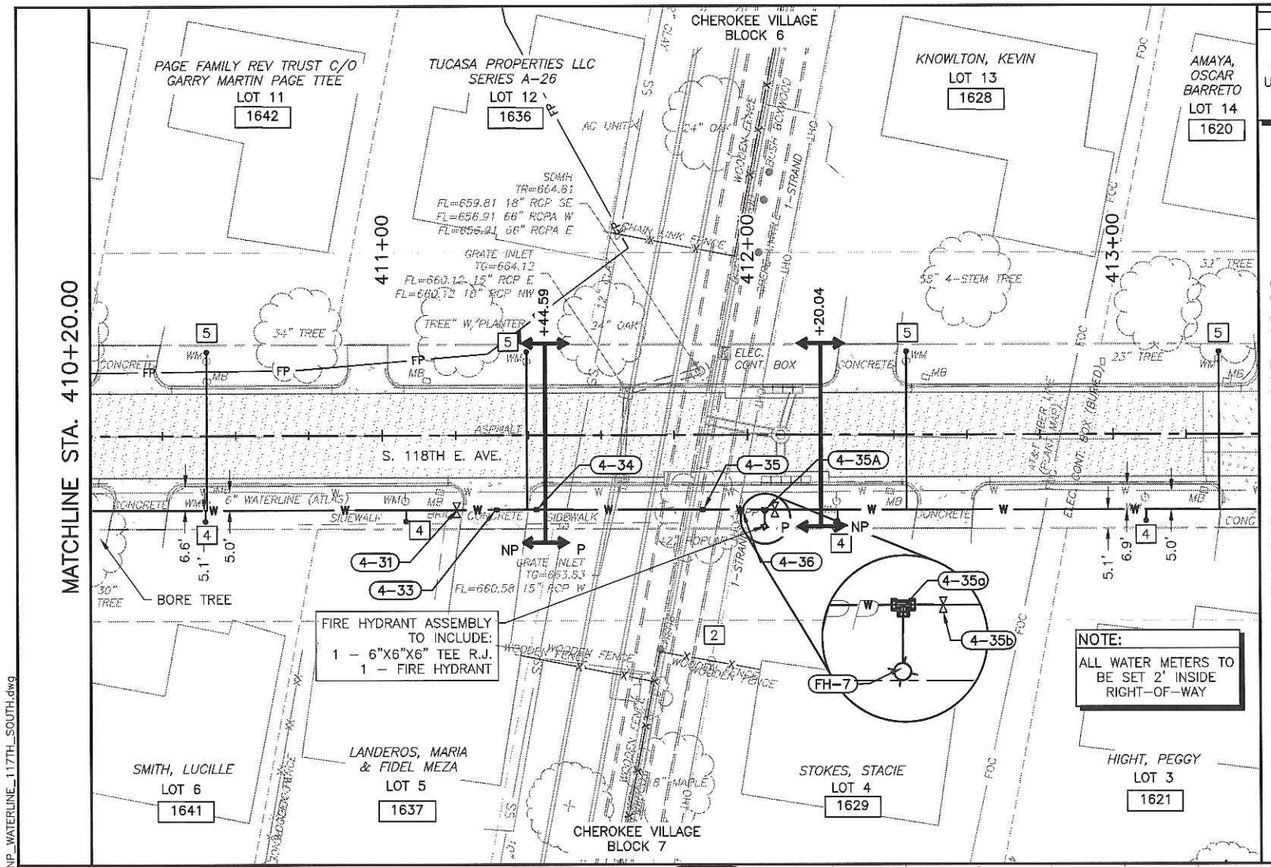

CAUTION
NATURAL GAS
SANITARY SEWER
UNDERGROUND ELECTRIC
UNDERGROUND TELEPHONE
OVERHEAD TELEPHONE
WATERLINE

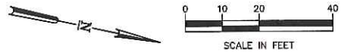

CONSTRUCTION NOTES:

1. CONNECT TO EXISTING WATERLINE
2. PIPE DEFLECTION NOT TO EXCEED 3° ON ANY FITTING OR JOINT
3. REMOVE FIRE HYDRANT
4. REMOVE AND RECONSTRUCT WATER METER, RESTORE SHORT WATER SERVICE
5. REMOVE AND RECONSTRUCT WATER METER, RESTORE LONG WATER SERVICE
6. CUT & PLUG EXISTING WATERLINE
7. REMOVE AND RESET ELECTRICAL BOX
8. REMOVE AND REPLACE EXISTING FENCE (LIKE-KIND)

LEGEND

- PROPOSED WATER LINE
- PROPOSED FENCE
- C.R.L.
- EXISTING FENCE
- SECTION LINE
- RIGHT-OF-WAY
- LOT LINE / PROPERTY LINE
- EXISTING OVERHEAD ELECTRIC
- EXISTING UNDERGROUND ELECTRIC
- EXISTING GAS LINE
- EXISTING SANITARY SEWER
- EXISTING STORM SEWER
- EXISTING WATER LINE
- EXISTING EASEMENT LINE
- FLOODPLAIN LINE
- BENCHMARK

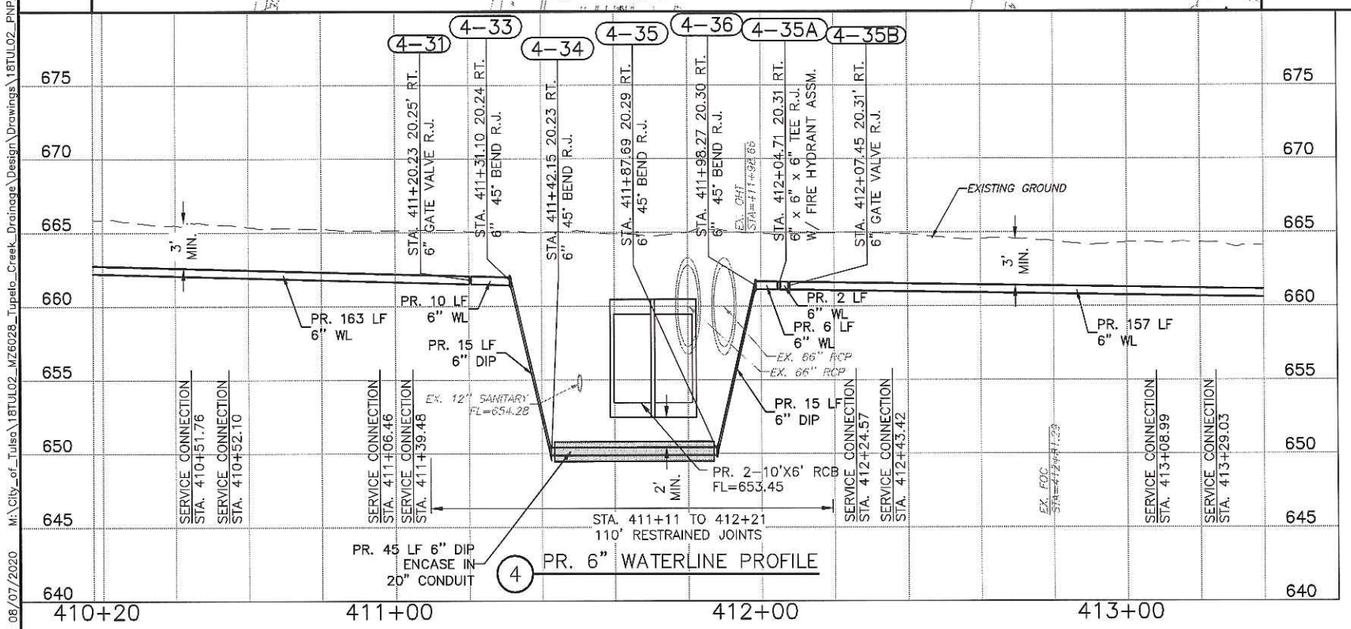

4 PR. 6" WATERLINE PROFILE

FURNISHED AND INSTALLED BY CONTRACTOR

TABLE OF FITTINGS

FITTING NO.	DESCRIPTION	NORTHING	EASTING	STATION	OFFSET
4-31	6" GATE VALVE R.J.	421353.33	2604531.18	411+20.23	20.25' RT
4-33	6" 45° BEND R.J.	421363.96	2604528.88	411+31.10	20.24' RT
4-34	6" 45° BEND R.J.	421374.76	2604526.54	411+42.15	20.23' RT
4-35	6" 45° BEND R.J.	421419.28	2604516.98	411+87.69	20.29' RT
4-35A	6" X 6" X 6" TEE R.J.	421435.93	2604513.41	412+04.71	20.31' RT
4-35B	6" GATE VALVE R.J.	421438.60	2604512.84	412+07.45	20.31' RT
4-36	6" 45° BEND R.J.	421429.63	2604514.76	411+98.27	20.30' RT
FH-7	3-WAY FIRE HYDRANT	421436.83	2604517.86	412+04.66	24.85' RT

OKIE 811 Know what's below. Call before you dig.

PROJECT #144628-W, TMUA-W 18-16 MAINTENANCE ZONE 6028-W

WATERLINE PLAN & PROFILE
LINE - 4

PROJECT #144628-W, TMUA-W 18-16

MAINTENANCE ZONE 6028-W
TUPELO CREEK DRAINAGE

CITY OF TULSA, OKLAHOMA
ENGINEERING SERVICES DEPARTMENT

PLANS AND ESTIMATES PREPARED BY:
Meshek & Associates, L.L.C.
1437 S. Boulder Avenue, Suite 1550 Tulsa, OK 74119 (918)392-5520

LICENSED PROFESSIONAL ENGINEER
BENJAMIN W. FLETCHER
24921
OKLAHOMA

8/7/2020

REVISION	BY	DATE

PLAN SCALE	DRAWN	SCB	08/20
1" = 20'	DESIGNED	BWF	08/20
	SURVEY	AB	08/18
PROFILE SCALE	PROJ. MGR.		
HORIZONTAL: 1" = 20'	LEAD ENGR.		
	FIELD MGR.		
VERTICAL: 1" = 5'	RECOMMENDED		
	DESIGN MANAGER		
FILE:	DRAWING:		
ATLAS PAGE NO. 235			

APPROVED:

CITY ENGINEER

DATE:

SHEET 101 OF 161 SHEETS

PRINT DATE: 08/07/2020 M:\City_of_Tulsa\18TUL02_MZ6028_Tupelo_Creek_Drainage\Design\Drawings\18TUL02_PNP_WATERLINE_117TH_SOUTH.dwg

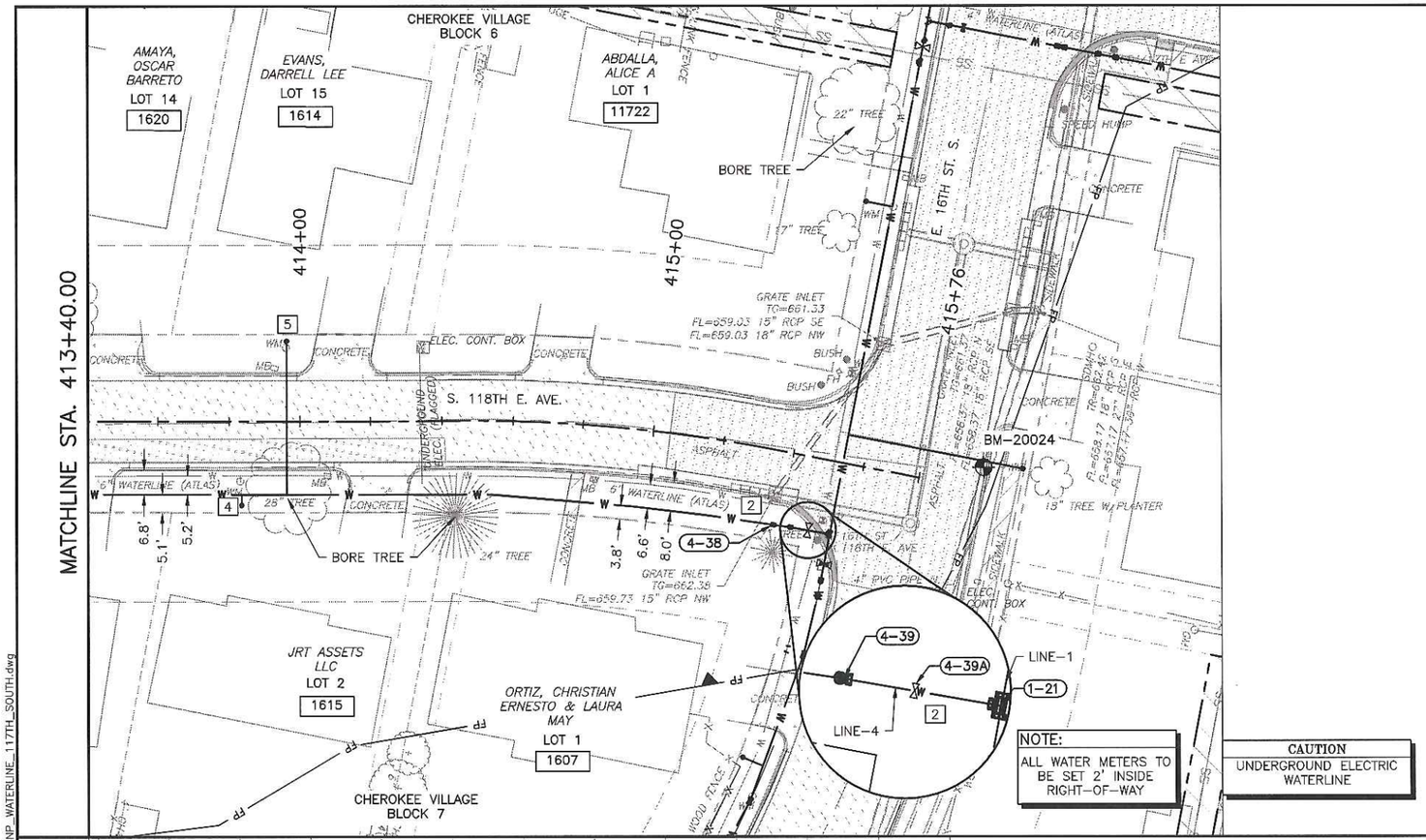

CONSTRUCTION NOTES:

1. CONNECT TO EXISTING WATERLINE
2. PIPE DEFLECTION NOT TO EXCEED 3° ON ANY FITTING OR JOINT
3. REMOVE FIRE HYDRANT
4. REMOVE AND RECONSTRUCT WATER METER, RESTORE SHORT WATER SERVICE
5. REMOVE AND RECONSTRUCT WATER METER, RESTORE LONG WATER SERVICE
6. CUT & PLUG EXISTING WATERLINE
7. REMOVE AND RESET ELECTRICAL BOX
8. REMOVE AND REPLACE EXISTING FENCE (LIKE-KIND)

LEGEND

- PROPOSED WATER LINE
- PROPOSED FENCE
- C.R.L.
- EXISTING FENCE
- SECTION LINE
- RIGHT-OF-WAY
- LOT LINE / PROPERTY LINE
- EXISTING OVERHEAD ELECTRIC
- EXISTING UNDERGROUND ELECTRIC
- EXISTING GAS LINE
- EXISTING SANITARY SEWER
- EXISTING STORM SEWER
- EXISTING WATER LINE
- EXISTING EASEMENT LINE
- FLOODPLAIN LINE
- BENCHMARK

PROJECT #144628-W, TMUA-W 18-16 MAINTENANCE ZONE 6028-W

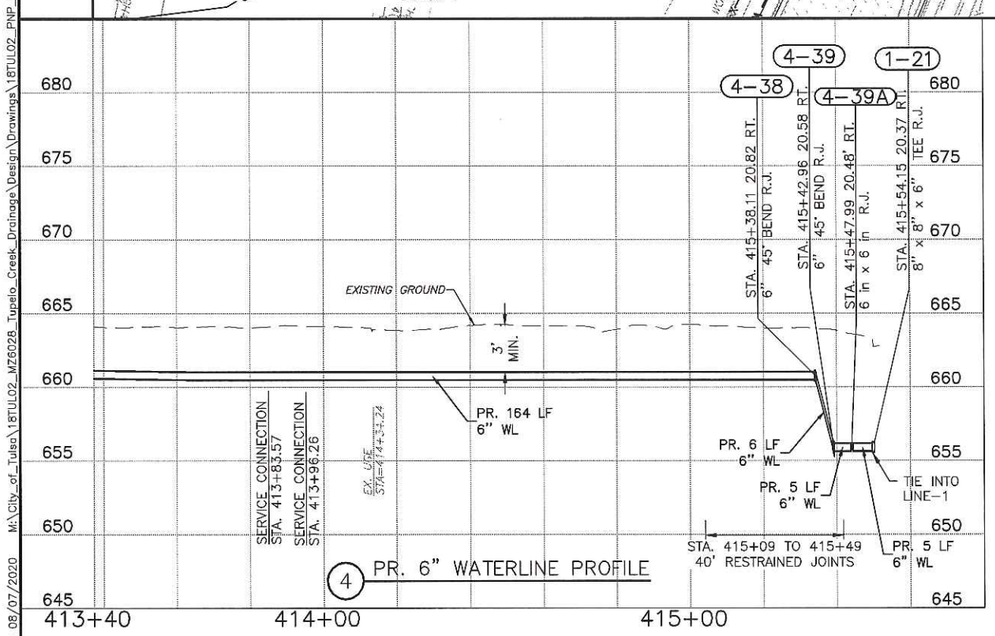

4 PR. 6" WATERLINE PROFILE

FURNISHED AND INSTALLED BY CONTRACTOR					
TABLE OF FITTINGS					
FITTING NO.	DESCRIPTION	NORTHING	EASTING	STATION	OFFSET
4-38	6" 45° BEND R.J.	421759.21	2604452.68	415+38.11	20.82' RT
4-39	6" 45° BEND R.J.	421764.05	2604452.34	415+42.96	20.58' RT
4-39A	6" GATE VALVE R.J.	421769.08	2604452.14	415+47.99	20.48' RT

BENCHMARK
BM-20024
CHISELED "X" SET
N=421813.68
E=2604424.73
EL=662.42

OKIE 811 Know what's below. Call before you dig.

LICENSED PROFESSIONAL ENGINEER BENJAMIN W. FLETCHER 24921 OKLAHOMA

8/7/2020

WATERLINE PLAN & PROFILE LINE - 4

PROJECT #144628-W, TMUA-W 18-16

MAINTENANCE ZONE 6028-W
TUPELO CREEK DRAINAGE

CITY OF TULSA, OKLAHOMA
ENGINEERING SERVICES DEPARTMENT

PLANS AND ESTIMATES PREPARED BY:
Meshek & Associates, L.L.C.
1437 S. Boulder Avenue, Suite 1550 Tulsa, OK 74119 (918)392-5620

REVISION	BY	DATE

PLAN SCALE 1" = 20'	DRAWN	SCB	08/20
	DESIGNED	BWF	08/20
	SURVEY	AB	08/18
PROFILE SCALE	PROJ. MGR.		
HORIZONTAL: 1" = 20'	LEAD ENGR.		
	FIELD MGR.		
VERTICAL: 1" = 5'	RECOMMENDED DESIGN MANAGER		
FILE:	DRAWING:		
ATLAS PAGE NO. 235			

APPROVED:

CITY ENGINEER

DATE:

SHEET 102 OF 161 SHEETS

PRINT DATE: 08/07/2020 M:\City_of_Tulsa\18TUL02_MZ6028_Tupelo_Creek_Drainage\Design\Drawings\18TUL02_PNP_WATERLINE_117TH_SOUTH.dwg

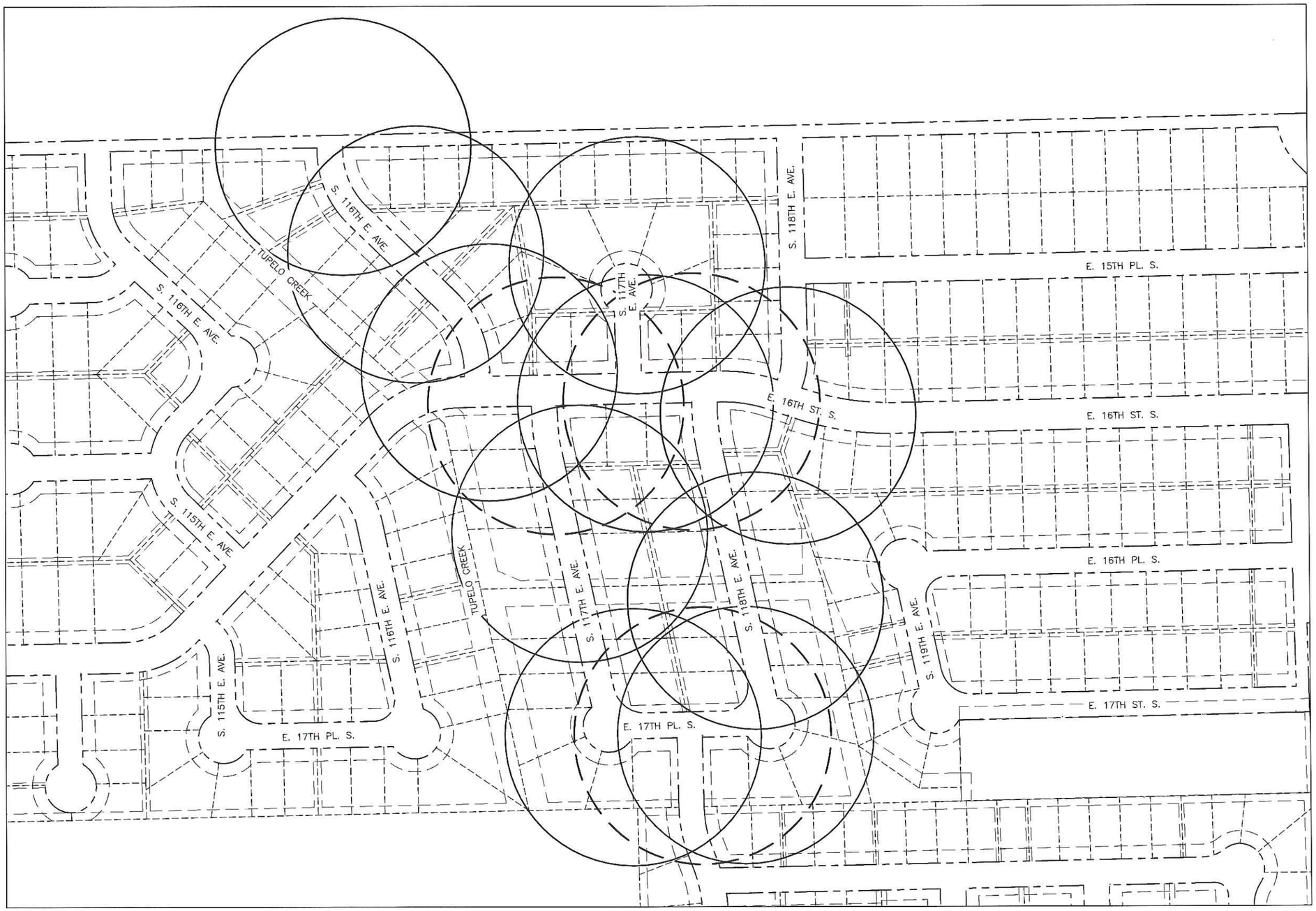

N

0 50 100 200
SCALE IN FEET

PROPOSED HYDRANT COVERAGE R=250'

EXISTING HYDRANT COVERAGE R=250'

PROJECT #144628-W, TMUA-W 18-16 MAINTENANCE ZONE 6028-W

LICENSED PROFESSIONAL ENGINEER
BENJAMIN W. FLETCHER
24921
OKLAHOMA

8/7/2020

OKIE 811
Know what's below. Call before you dig.

FIRE HYDRANT SPACING MAP

PROJECT #144628-W, TMUA-W 18-16

MAINTENANCE ZONE 6028-W
TUPELO CREEK DRAINAGE

CITY OF TULSA, OKLAHOMA
ENGINEERING SERVICES DEPARTMENT

PLANS AND ESTIMATES PREPARED BY:
Meshek & Associates, L.L.C.
1437 S. Boulder Avenue, Suite 1550 Tulsa, OK 74119 (918)392-5620

REVISION	BY	DATE

PLAN SCALE
1" = 100'

PROFILE SCALE
HORIZONTAL: N/A
VERTICAL: N/A

DRAWN	SCB	08/20	APPROVED:
DESIGNED	BWF	08/20	
SURVEY	AB	08/18	
PROJ. MGR.			
LEAD ENGR.			
FIELD MGR.			
RECOMMENDED			
DESIGN MANAGER			CITY ENGINEER
FILE:	DRAWING:		DATE:
ATLAS PAGE NO. 235			SHEET 103 OF 161 SHEETS

PRINT DATE: 08/07/2020 M:\City_of_Tulsa\18TUL02_MZ6028_Tupelo_Creek_Drainage\Design\Drawings\18TUL02_HYDRANT_SPACING_MAP.dwg

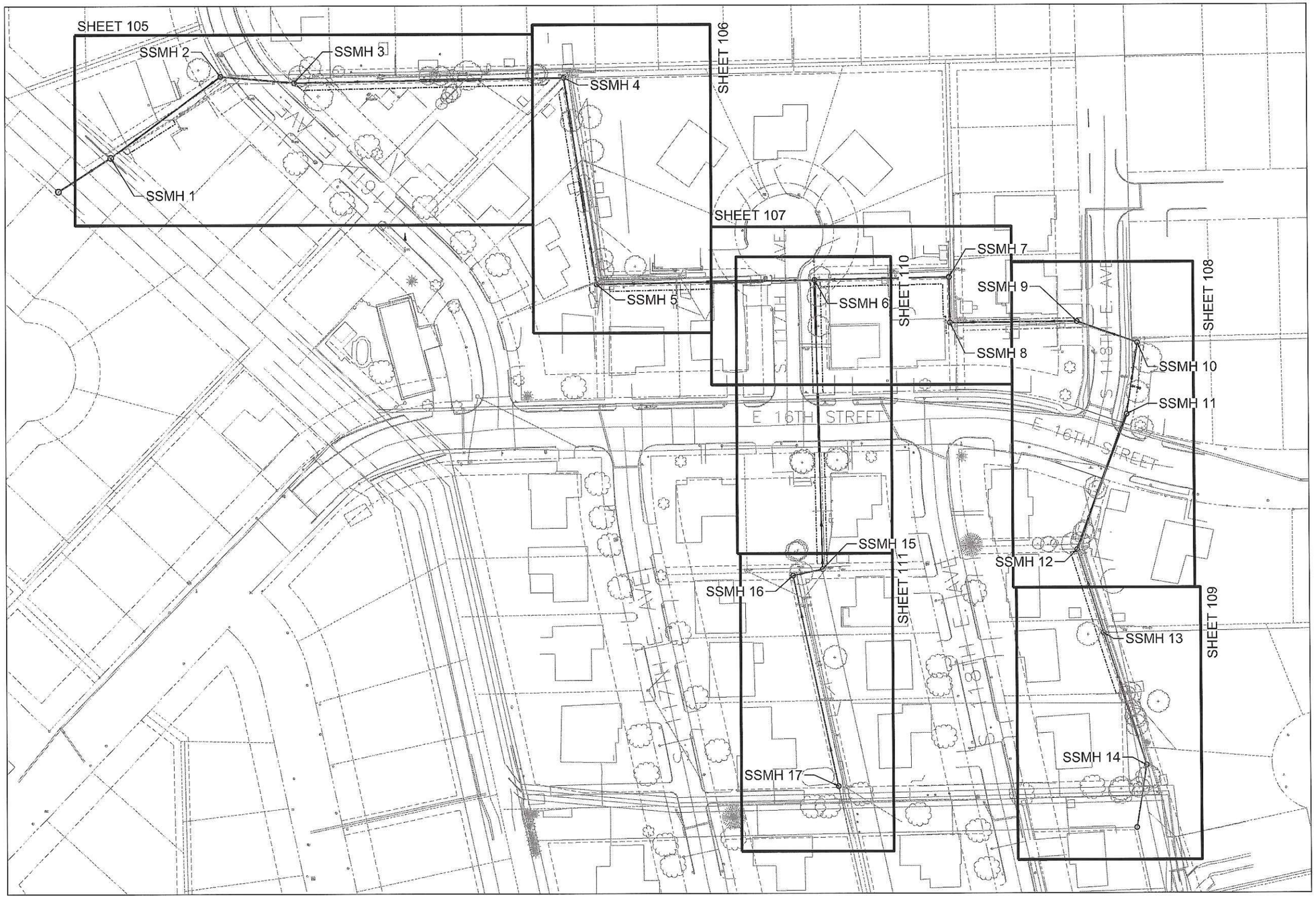

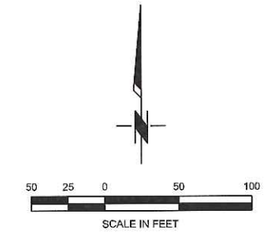

BEFORE YOU DIG CALL OKIE 1-800-522-OKIE

LICENSED PROFESSIONAL ENGINEER SARA ARZU 22331 OKLAHOMA 07/23/2020

SANITARY SEWER KEY PLAN

PROJECT NO ES. 2019-08

NON-ARTERIAL STREET MZ 6028-W

CITY OF TULSA, OKLAHOMA
ENGINEERING SERVICES DEPARTMENT

PLANS AND ESTIMATES PREPARED BY:

CIVIL/ENVIRONMENTAL ENGINEERING
8179 EAST. 41ST STREET.
TULSA, OKLAHOMA 74145

PHONE:(918)749-5800 FAX:(918)749-5858
C.A. NO.: 1371 - EXPIRES: 6/30/22

REVISION	BY	DATE

PLAN SCALE: 1"=50'	DRAWN	SL	7/20	APPROVED:
	DESIGNED	SA	7/20	
	SURVEY	AB	8/18	
PROFILE SCALE	PROJ. MNGR.			
HORIZONTAL:	LEAD ENGR.			
	FIELD MNGR.			
VERTICAL:	RECOMMENDED:			
	DEPUTY DIRECTOR			CITY ENGINEER
FILE: 2018-53-055-01\DESIGN\SHTS\KEYMAP				DATE 07/2020
ATLAS PAGE NO. 235				SHEET 104 OF 161 SHEETS

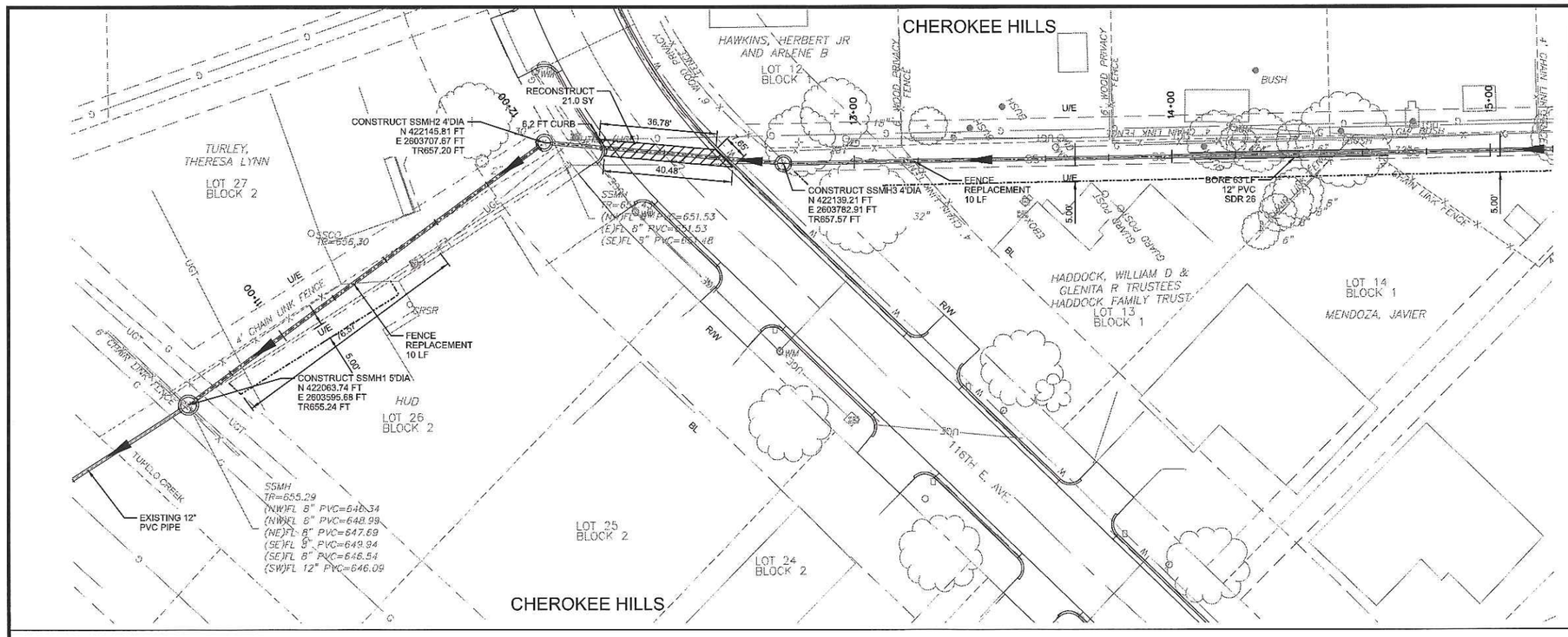

BEFORE YOU DIG CALL OKIE 1-800-522-OKIE

LICENSED PROFESSIONAL ENGINEER SARA ARZU 22231 OKLAHOMA 07/23/2020

SANITARY SEWER PLAN AND PROFILE

PROJECT NO ES. 2019-08

NON-ARTERIAL STREET MZ 6028-W

CITY OF TULSA, OKLAHOMA
ENGINEERING SERVICES DEPARTMENT

PLANS AND ESTIMATES PREPARED BY:
CIVIL/ENVIRONMENTAL ENGINEERING
8179 EAST. 41ST STREET.
TULSA, OKLAHOMA 74145
PHONE:(918)749-5800 FAX:(918)749-5858
C.A. NO.: 1371 - EXPIRES: 6/30/22

REVISION	BY	DATE

PLAN SCALE: 1"=20'	DRAWN	SL	07/20	APPROVED:
	DESIGNED	SA	07/20	
	SURVEY	AB	08/18	
PROFILE SCALE	PROJ. MNGR.			
HORIZONTAL: 1"=50'	LEAD ENGR.			
	FIELD MNGR.			
VERTICAL: 1"=5'	RECOMMENDED: DEPUTY DIRECTOR			CITY ENGINEER

FILE: 2018-53-055-01\DESIGN\SHTS\SSWR_PNP DATE 07/2020

ATLAS PAGE NO. 235 SHEET 105 OF 161 SHEETS

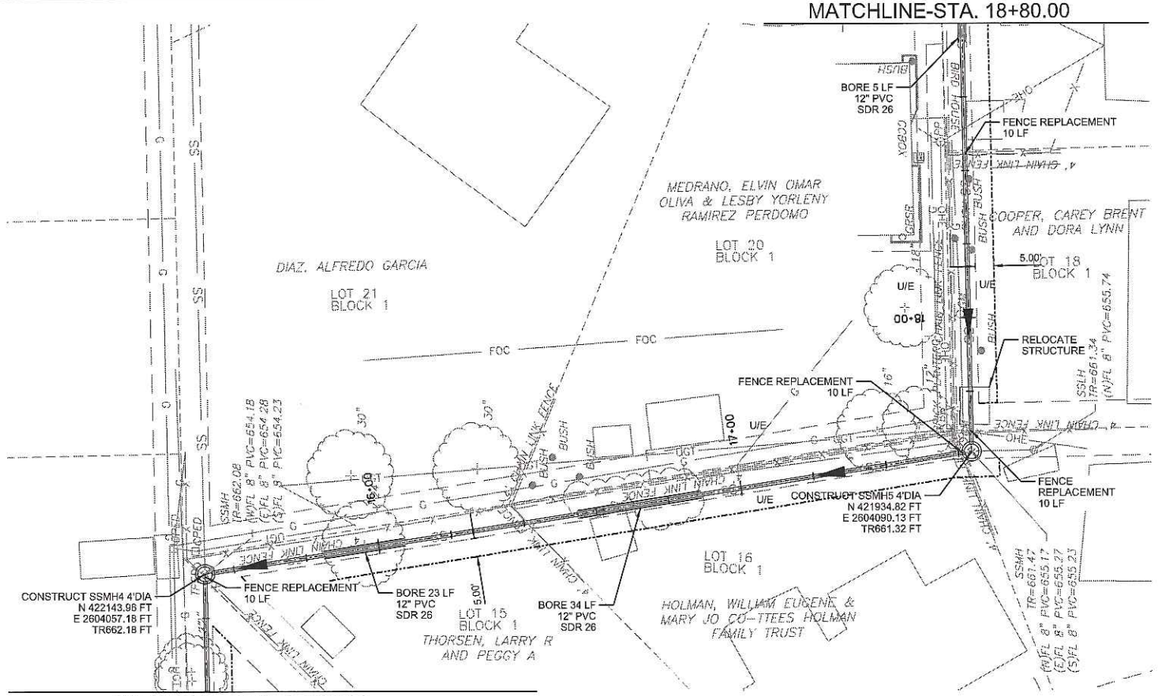

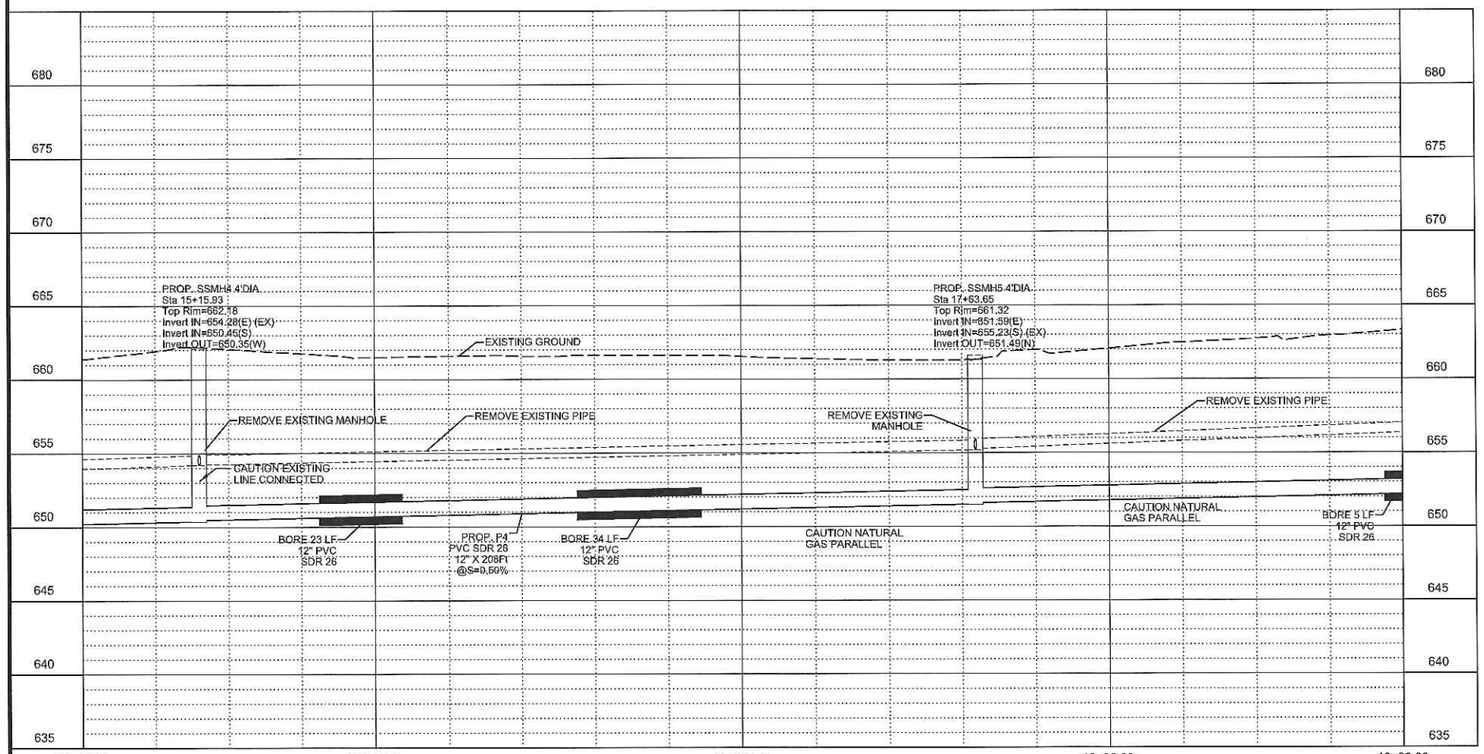

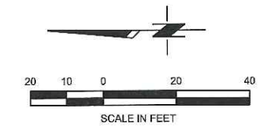

LEGEND

- FULL DEPTH AC PATCH TYPE 1
- REMOVE AND REPLACE SIDEWALK
- PROPOSED SSWR UTILITY EASEMENT
- TEMP. CONSTRUCTION UTILITY EASEMENT

NOTE: REMOVE EXISTING SANITARY SEWER PIPE AND MANHOLES. SEE PROFILE FOR LOCATIONS.

BEFORE YOU DIG CALL OKIE 1-800-522-OKIE

LICENSED PROFESSIONAL ENGINEER SARA ARZU 22331 OKLAHOMA 07/23/2020

SANITARY SEWER PLAN AND PROFILE

PROJECT NO ES. 2019-08

NON-ARTERIAL STREET MZ 6028-W

CITY OF TULSA, OKLAHOMA
ENGINEERING SERVICES DEPARTMENT

PLANS AND ESTIMATES PREPARED BY:
CIVIL/ENVIRONMENTAL ENGINEERING
8179 EAST. 41ST STREET.
TULSA, OKLAHOMA 74145
PHONE:(918)749-5800 FAX:(918)749-5858
C.A. NO.: 1371 - EXPIRES: 6/30/22

REVISION	BY	DATE

PLAN SCALE: 1"=20'	DRAWN	SL	07/20
	DESIGNED	SA	07/20
	SURVEY	AB	06/18
PROFILE SCALE	PROJ. MNGR.		
HORIZONTAL: 1"=50'	LEAD ENGR.		
	FIELD MNGR.		
VERTICAL: 1"=5'	RECOMMENDED: DEPUTY DIRECTOR		

APPROVED:

CITY ENGINEER

FILE: 2018-53-055-01\DESIGN\SHTS\SSWR_PNP

DATE 07/2020

ATLAS PAGE NO. 235

SHEET 106 OF 161 SHEETS

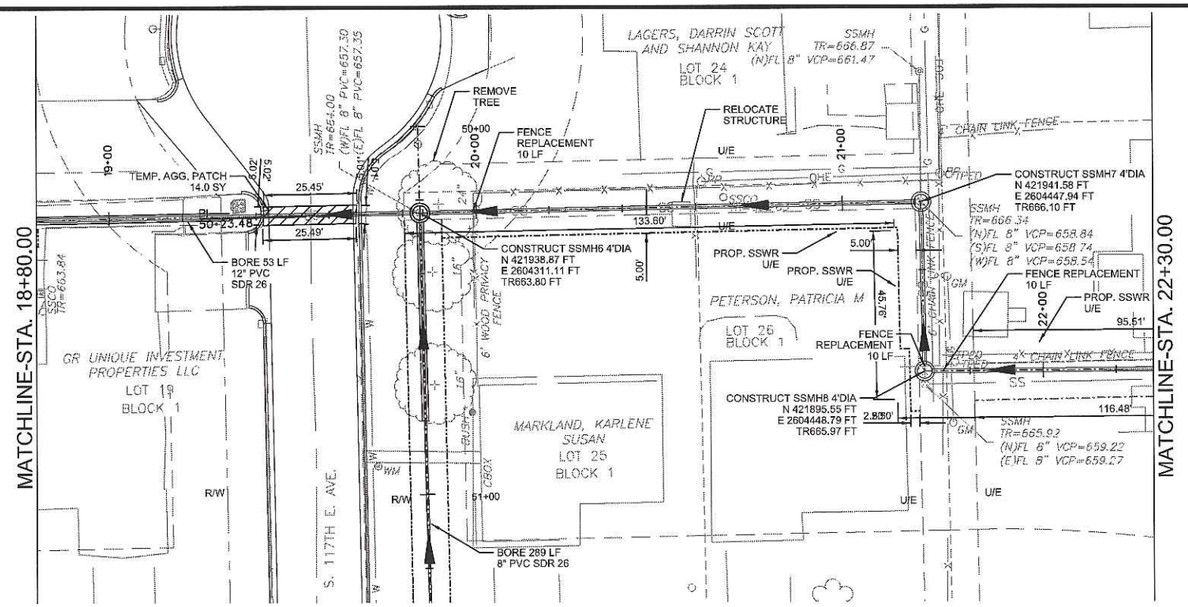

LEGEND

- FULL DEPTH AC PATCH TYPE 1
- REMOVE AND REPLACE SIDEWALK
- PROPOSED SSWR UTILITY EASEMENT
- TEMP. CONSTRUCTION UTILITY EASEMENT

NOTE: REMOVE EXISTING SANITARY SEWER PIPE AND MANHOLES. SEE PROFILE FOR LOCATIONS.

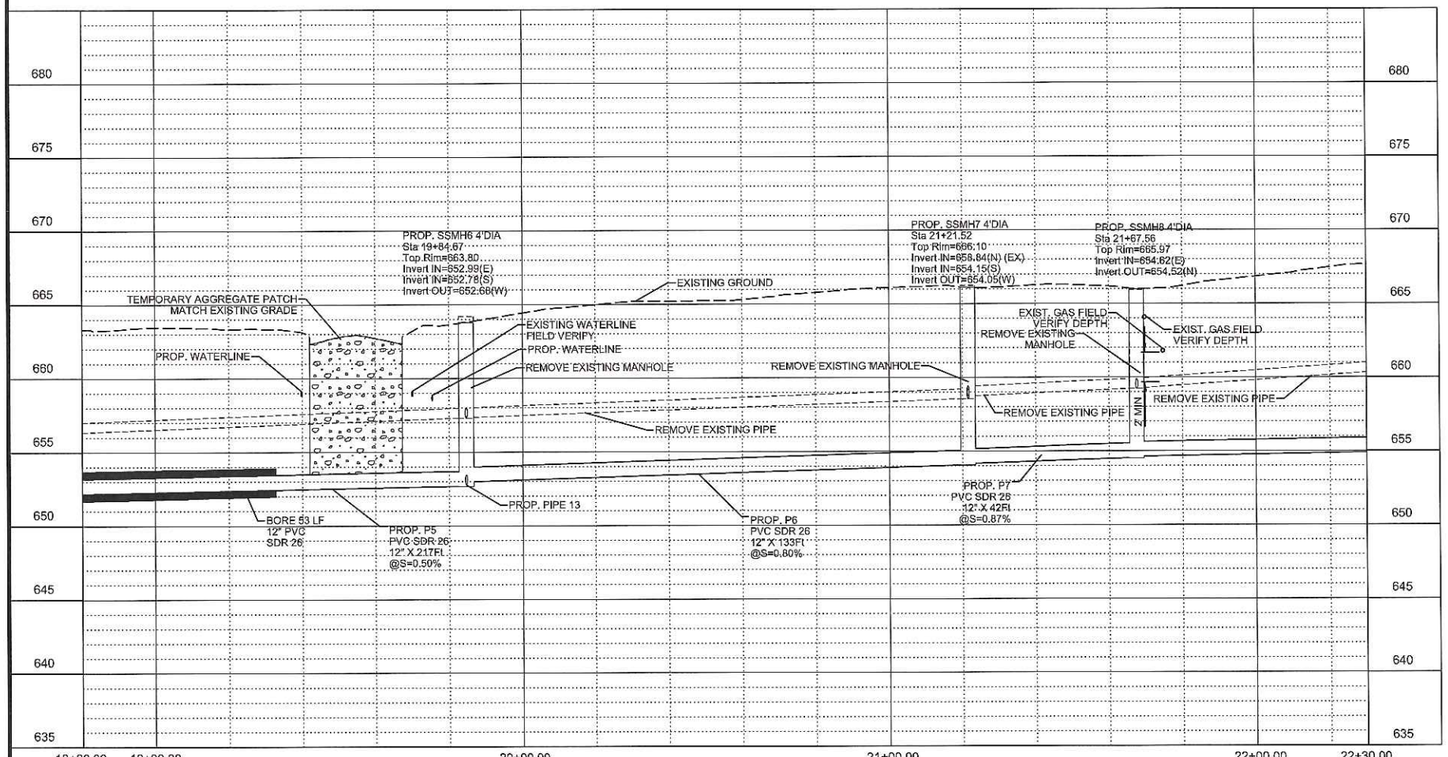

BEFORE YOU DIG CALL OKIE

LICENSED PROFESSIONAL ENGINEER SARA ARZUX 22231 OKLAHOMA 07/23/2020

SANITARY SEWER PLAN AND PROFILE

PROJECT NO ES. 2019-08

NON-ARTERIAL STREET MZ 6028-W

CITY OF TULSA, OKLAHOMA
ENGINEERING SERVICES DEPARTMENT

PLANS AND ESTIMATES PREPARED BY:
CIVIL/ENVIRONMENTAL ENGINEERING
8179 EAST. 41ST STREET.
TULSA, OKLAHOMA 74145
PHONE:(918)749-5800 FAX:(918)749-5858
C.A. NO.: 1371 - EXPIRES: 6/30/22

REVISION	BY	DATE

PLAN SCALE: 1"=20'	DRAWN	SL	07/20	APPROVED:
	DESIGNED	SA	07/20	
	SURVEY	AB	08/18	
PROFILE SCALE	PROJ. MNGR.			
HORIZONTAL: 1"=50'	LEAD ENGR.			
	FIELD MNGR.			
VERTICAL: 1"=5'	RECOMMENDED: DEPUTY DIRECTOR			CITY ENGINEER
FILE: 2018-53-055-01\DESIGN\SHTS\SSWR_PNP				DATE 07/2020
ATLAS PAGE NO. 235				SHEET 107 OF 161 SHEETS

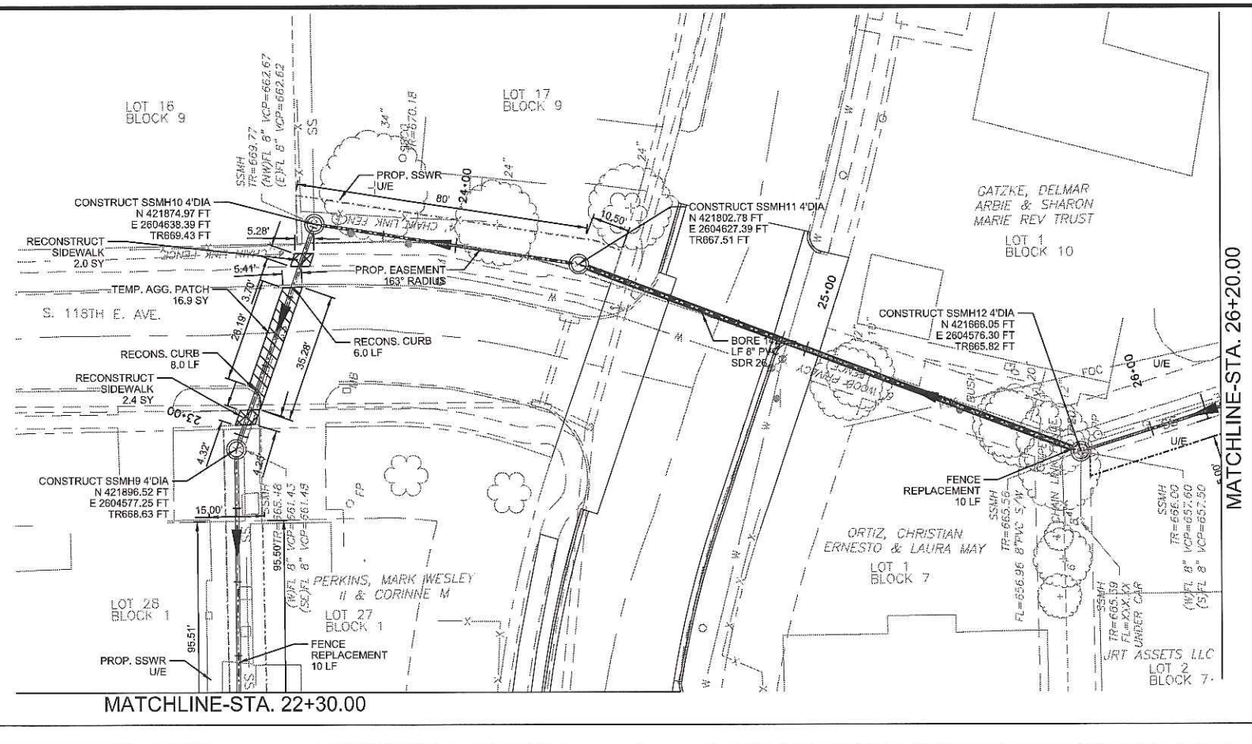

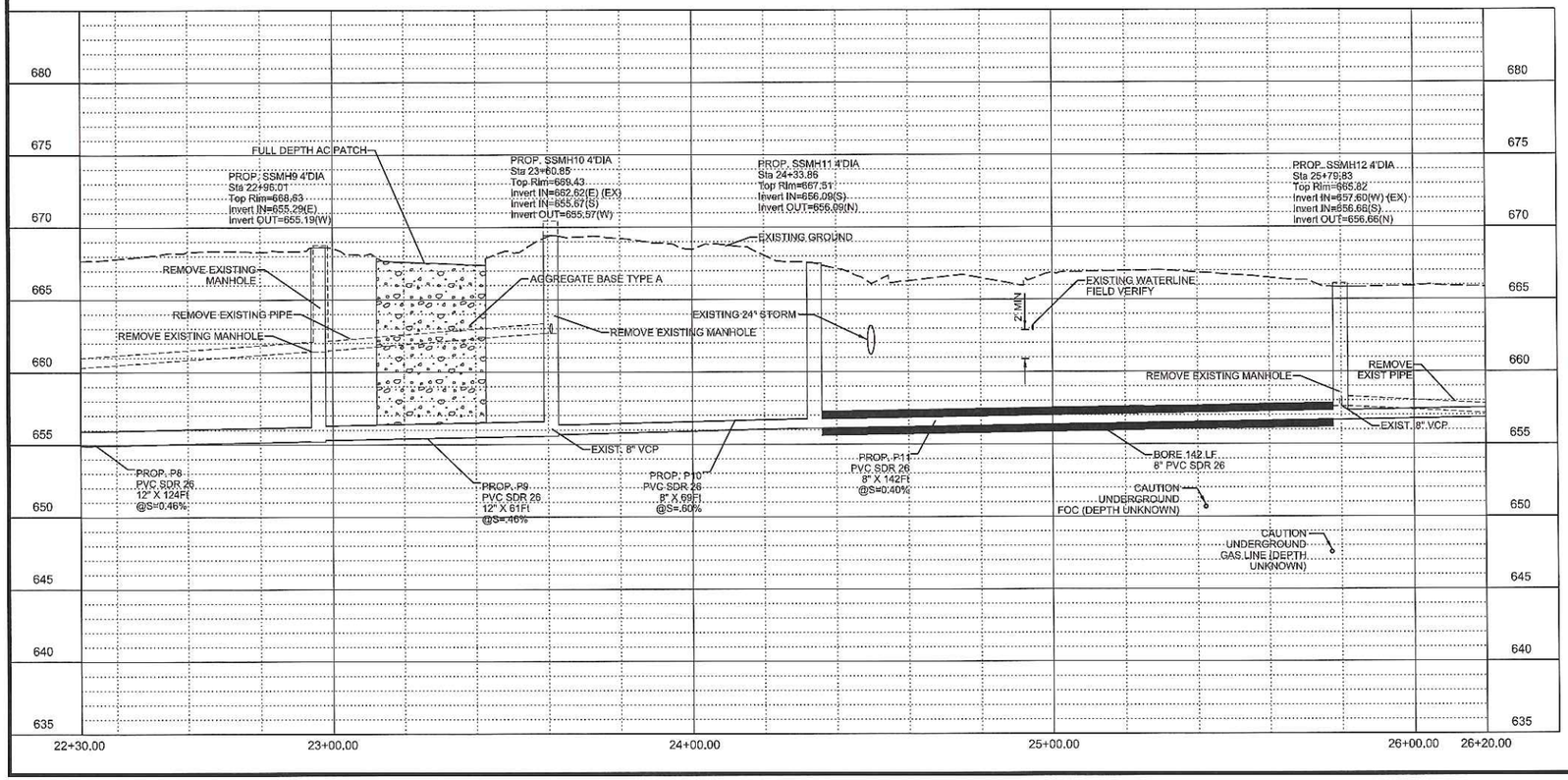

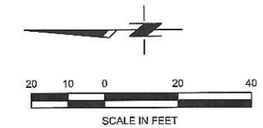

LEGEND

- FULL DEPTH AC PATCH TYPE 1
- REMOVE AND REPLACE SIDEWALK
- PROPOSED SSWR UTILITY EASEMENT
- TEMP. CONSTRUCTION UTILITY EASEMENT

NOTE: REMOVE EXISTING SANITARY SEWER PIPE AND MANHOLES. SEE PROFILE FOR LOCATIONS.

BEFORE YOU DIG CALL OKIE 1-800-522-OKIE

LICENSED PROFESSIONAL ENGINEER SARA ARZU 22331 OKLAHOMA 07/23/2020

SANITARY SEWER PLAN AND PROFILE

PROJECT NO ES. 2019-08

NON-ARTERIAL STREET MZ 6028-W

CITY OF TULSA, OKLAHOMA
ENGINEERING SERVICES DEPARTMENT

PLANS AND ESTIMATES PREPARED BY:
CIVIL/ENVIRONMENTAL ENGINEERING
8179 EAST. 41ST STREET.
TULSA, OKLAHOMA 74145
PHONE:(918)749-5800 FAX:(918)749-5858
C.A. NO.: 1371 - EXPIRES: 6/30/22

REVISION	BY	DATE

PLAN SCALE: 1"=20'	DRAWN	SL	07/20
	DESIGNED	SA	07/20
	SURVEY	AB	08/18
PROFILE SCALE	PROJ. MNGR.		
HORIZONTAL: 1"=50'	LEAD ENGR.		
	FIELD MNGR.		
VERTICAL: 1"=5'	RECOMMENDED: DEPUTY DIRECTOR		

APPROVED:
CITY ENGINEER

FILE: 2018-53-055-01\DESIGN\SHTS\SSWR_PNP
DATE 07/2020
ATLAS PAGE NO. 235
SHEET 108 OF 161 SHEETS

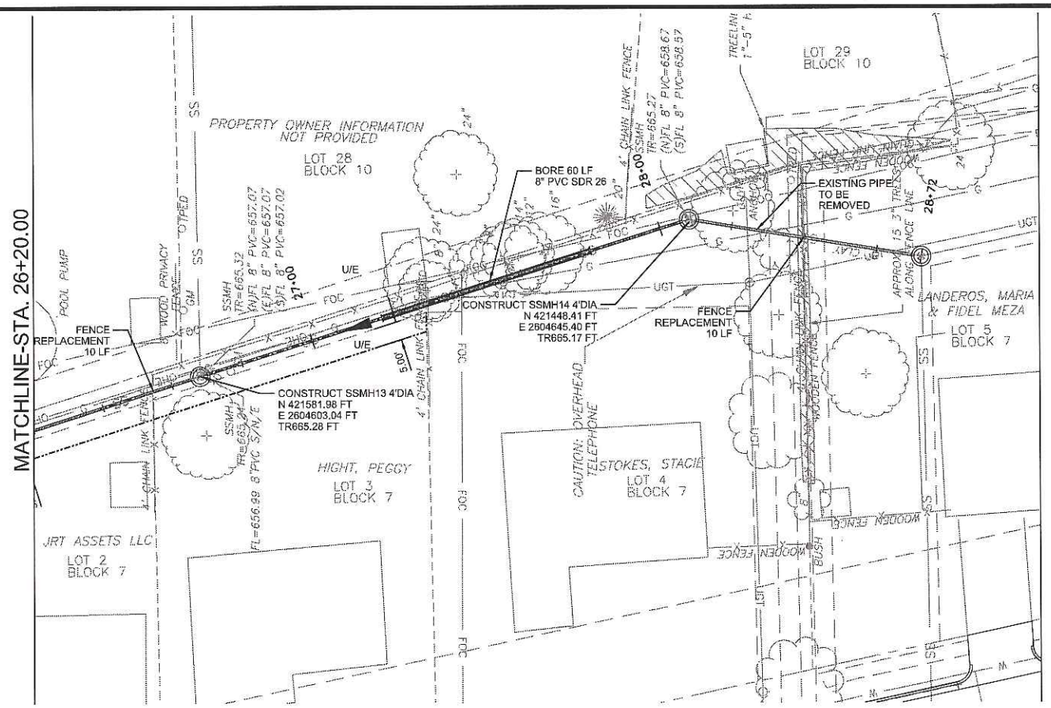

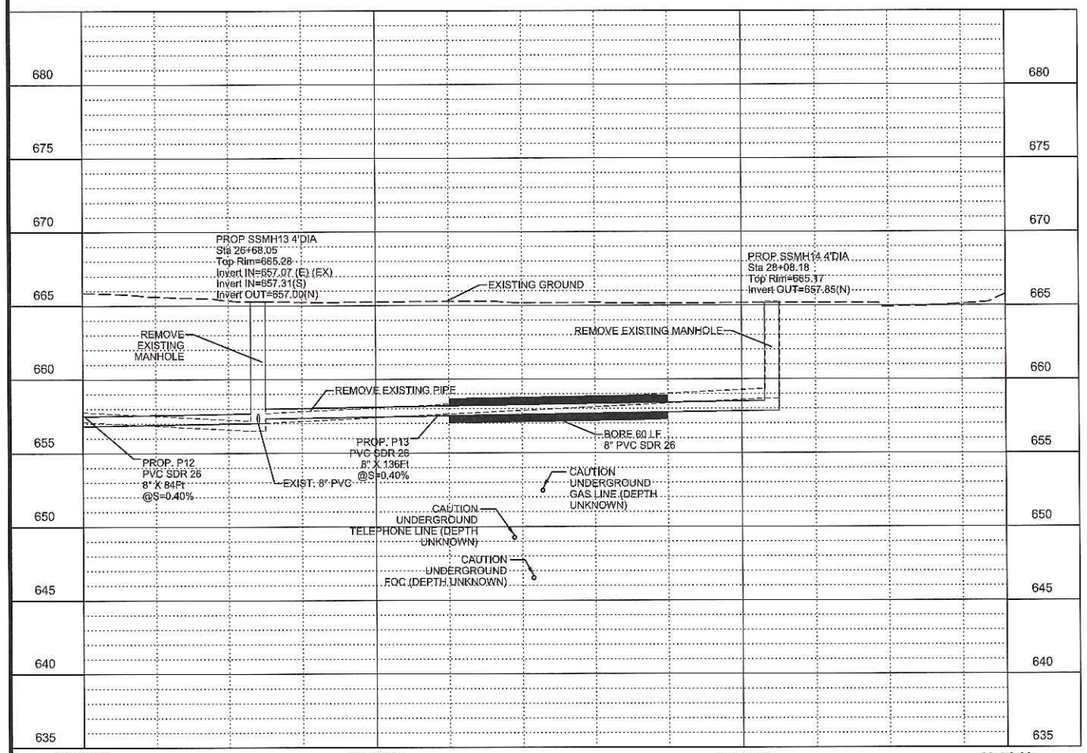

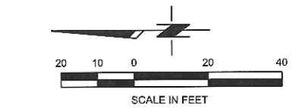

LEGEND

- FULL DEPTH AC PATCH TYPE 1
- REMOVE AND REPLACE SIDEWALK
- PROPOSED SSWR UTILITY EASEMENT
- TEMP. CONSTRUCTION UTILITY EASEMENT

NOTE: REMOVE EXISTING SANITARY SEWER PIPE AND MANHOLES. SEE PROFILE FOR LOCATIONS.

BEFORE YOU DIG CALL OKIE 800-522-6543

LICENSED PROFESSIONAL ENGINEER SARA ARZU 23201 OKLAHOMA 07/23/2020

SANITARY SEWER PLAN AND PROFILE

PROJECT NO ES. 2019-08

NON-ARTERIAL STREET MZ 6028-W

CITY OF TULSA, OKLAHOMA
ENGINEERING SERVICES DEPARTMENT

PLANS AND ESTIMATES PREPARED BY:
CIVIL/ENVIRONMENTAL ENGINEERING
8179 EAST. 41ST STREET.
TULSA, OKLAHOMA 74145
PHONE:(918)749-5800 FAX:(918)749-5858
C.A. NO.: 1371 - EXPIRES: 6/30/22

REVISION	BY	DATE

PLAN SCALE: 1"=20'	DRAWN	SL	07/20	APPROVED:
	DESIGNED	SA	07/20	
	SURVEY	AB	08/18	
PROFILE SCALE	PROJ. MNGR.			
HORIZONTAL: 1"=50'	LEAD ENGR.			
	FIELD MNGR.			
VERTICAL: 1"=5'	RECOMMENDED: DEPUTY DIRECTOR			CITY ENGINEER
FILE: 2018-53-055-01\DESIGN\SHTS\SSWR_PNP				DATE 07/2020
ATLAS PAGE NO. 235				SHEET 109 OF 161 SHEETS

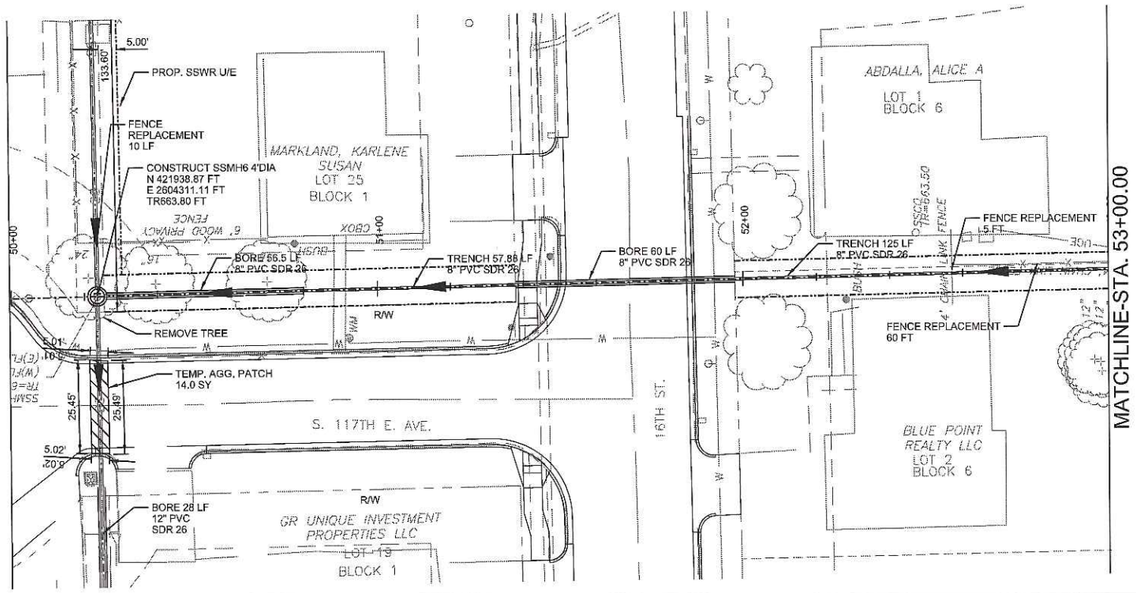

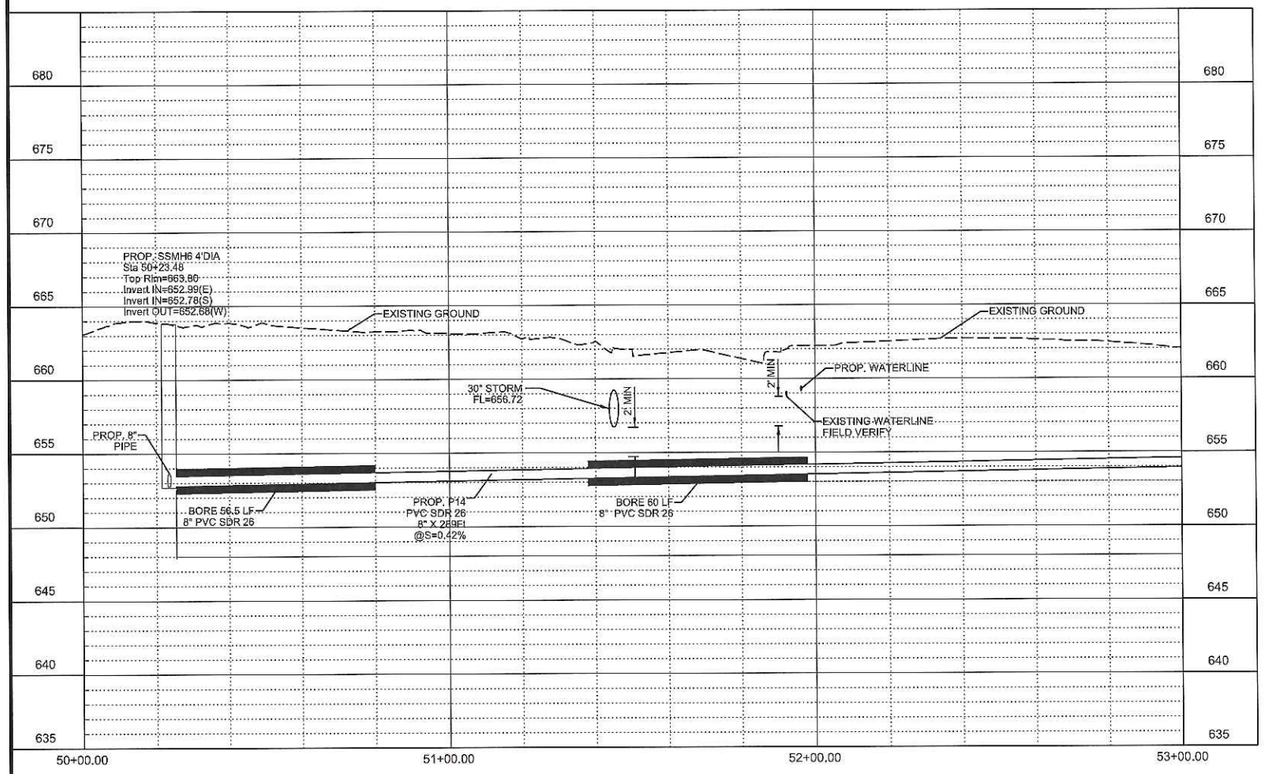

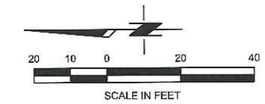

LEGEND

- FULL DEPTH AC PATCH TYPE 1
- REMOVE AND REPLACE SIDEWALK
- PROPOSED SSWR UTILITY EASEMENT
- TEMP. CONSTRUCTION UTILITY EASEMENT

NOTE: REMOVE EXISTING SANITARY SEWER PIPE AND MANHOLES. SEE PROFILE FOR LOCATIONS.

BEFORE YOU DIG CALL OKIE 1-800-522-6543

LICENSED PROFESSIONAL ENGINEER SARA ARZUA 22231 OKLAHOMA 07/23/2020

SANITARY SEWER PLAN AND PROFILE

PROJECT NO ES. 2019-08

NON-ARTERIAL STREET MZ 6028-W

CITY OF TULSA, OKLAHOMA
ENGINEERING SERVICES DEPARTMENT

PLANS AND ESTIMATES PREPARED BY:
CIVIL/ENVIRONMENTAL ENGINEERING
8179 EAST. 41ST STREET.
TULSA, OKLAHOMA 74145
PHONE:(918)749-5800 FAX:(918)749-5858
C.A. NO.: 1371 - EXPIRES: 6/30/22

REVISION	BY	DATE

PLAN SCALE: 1"=20'	DRAWN	SL	07/20
	DESIGNED	SA	07/20
	SURVEY	AB	08/18
PROFILE SCALE	PROJ. MNGR.		
HORIZONTAL: 1"=50'	LEAD ENGR.		
	FIELD MNGR.		
VERTICAL: 1"=5'	RECOMMENDED: DEPUTY DIRECTOR		

APPROVED: CITY ENGINEER

FILE: 2018-53-055-01\DESIGN\SHTS\SSWR_PNP

DATE 07/2020

ATLAS PAGE NO. 235

SHEET 110 OF 161 SHEETS

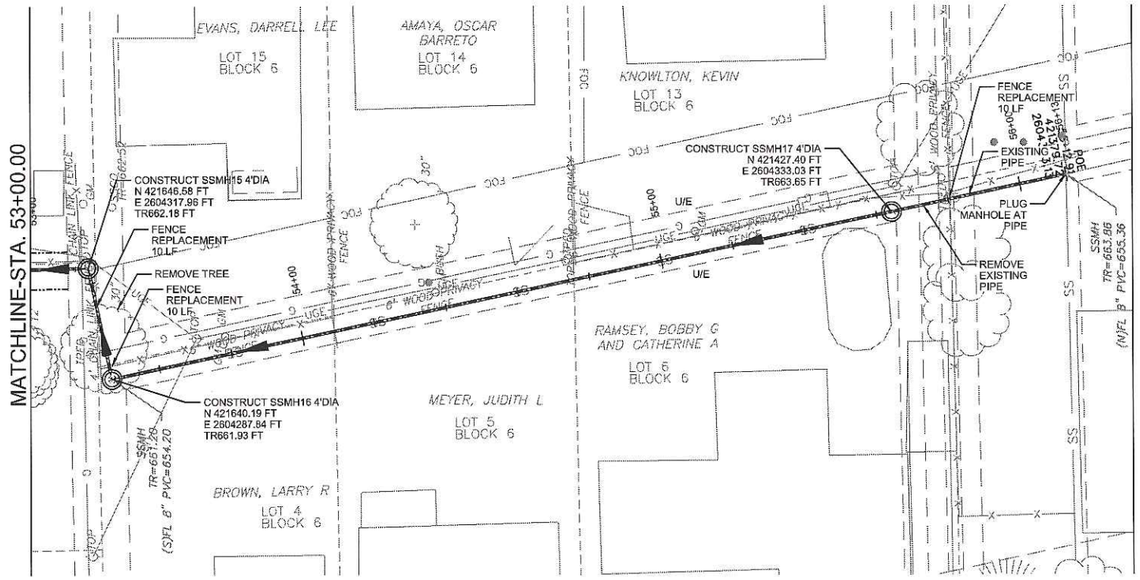

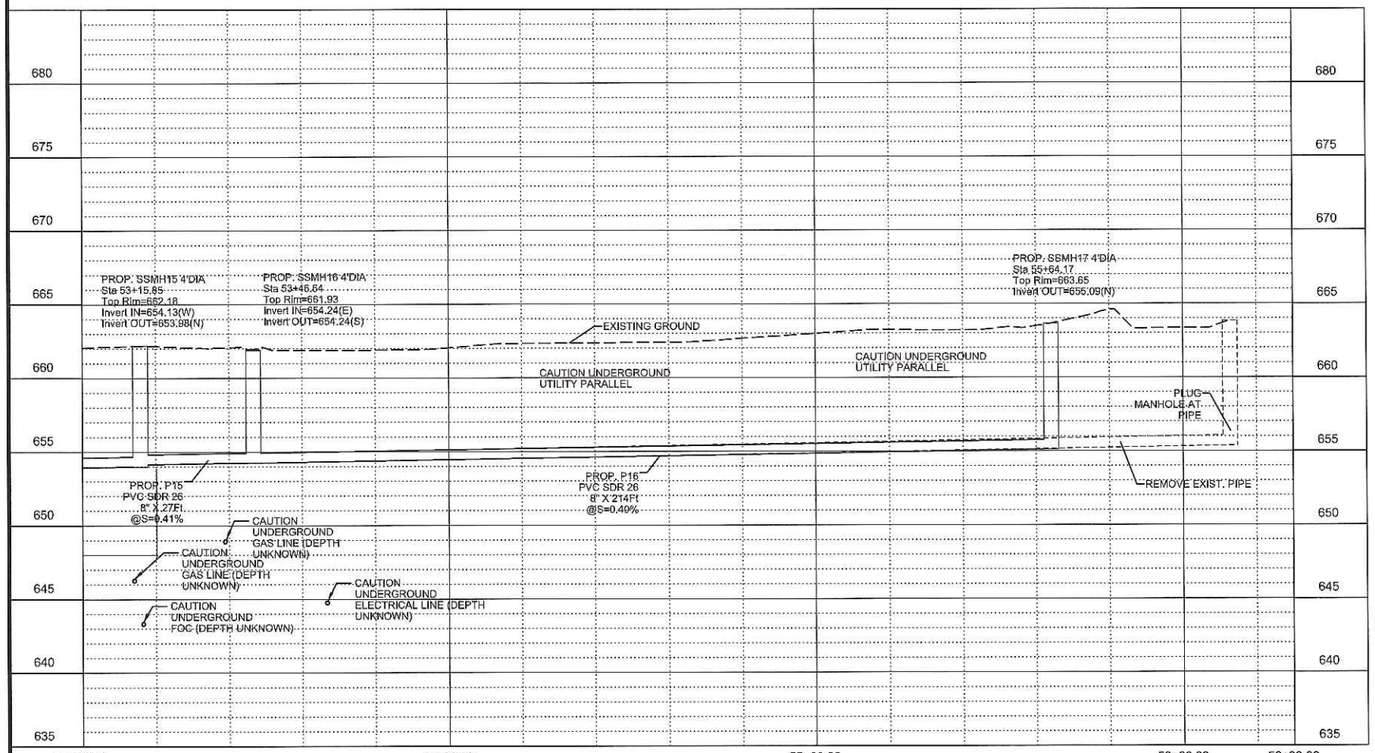

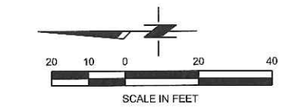

LEGEND

- FULL DEPTH AC PATCH TYPE 1
- REMOVE AND REPLACE SIDEWALK
- PROPOSED SSWR UTILITY EASEMENT
- TEMP. CONSTRUCTION UTILITY EASEMENT

NOTE: REMOVE EXISTING SANITARY SEWER PIPE AND MANHOLES. SEE PROFILE FOR LOCATIONS.

BEFORE YOU DIG CALL OKIE 1-800-522-OKIE

SAIRA ARZUAGA 23731 LICENSED PROFESSIONAL ENGINEER OKLAHOMA 07/23/2020

SANITARY SEWER PLAN AND PROFILE

PROJECT NO ES. 2019-08

NON-ARTERIAL STREET MZ 6028-W

CITY OF TULSA, OKLAHOMA
ENGINEERING SERVICES DEPARTMENT

PLANS AND ESTIMATES PREPARED BY:

CIVIL/ENVIRONMENTAL ENGINEERING
8179 EAST. 41ST STREET.
TULSA, OKLAHOMA 74145
PHONE:(918)749-5800 FAX:(918)749-5858
C.A. NO.: 1371 - EXPIRES: 6/30/22

REVISION	BY	DATE

PLAN SCALE: 1"=20'	DRAWN	SL	07/20
	DESIGNED	SA	07/20
	SURVEY	AB	08/18
PROFILE SCALE	PROJ. MNGR.		
HORIZONTAL: 1"=50'	LEAD ENGR.		
VERTICAL: 1"=5'	FIELD MNGR.		

APPROVED:

RECOMMENDED:

DEPUTY DIRECTOR

CITY ENGINEER

FILE: 2016-53-055-01\DESIGN\SHTS\SSWR_PNP

DATE 07/2020

ATLAS PAGE NO. 235

SHEET 111 OF 161 SHEETS

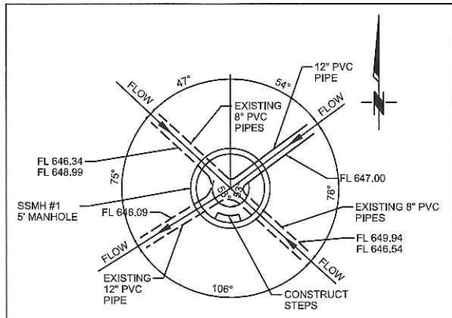

SANITARY SEWER MANHOLE #1 DETAIL

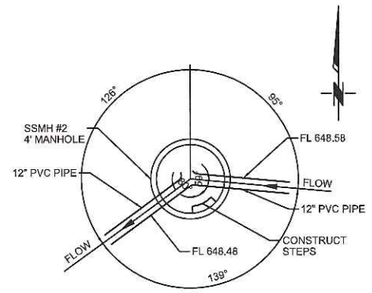

SANITARY SEWER MANHOLE #2 DETAIL

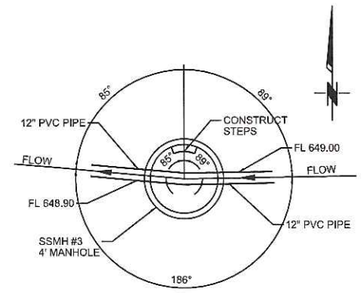

SANITARY SEWER MANHOLE #3 DETAIL

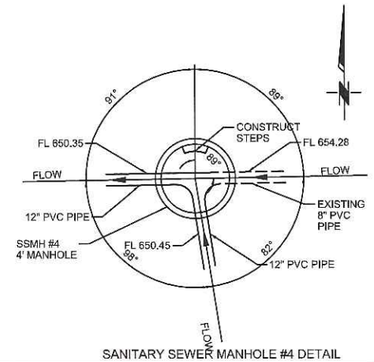

SANITARY SEWER MANHOLE #4 DETAIL

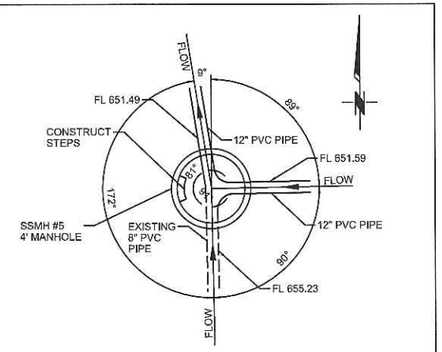

SANITARY SEWER MANHOLE #5 DETAIL

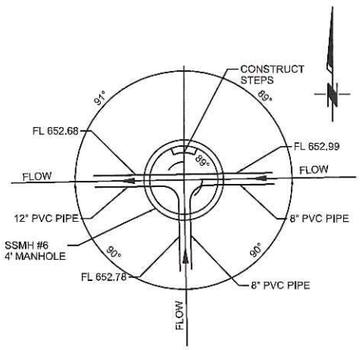

SANITARY SEWER MANHOLE #6 DETAIL

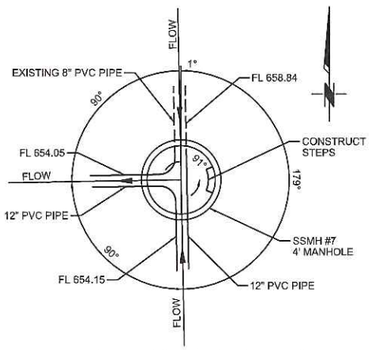

SANITARY SEWER MANHOLE #7 DETAIL

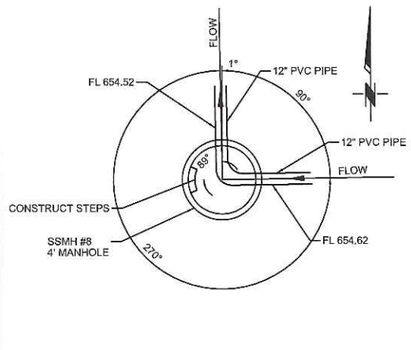

SANITARY SEWER MANHOLE #8 DETAIL

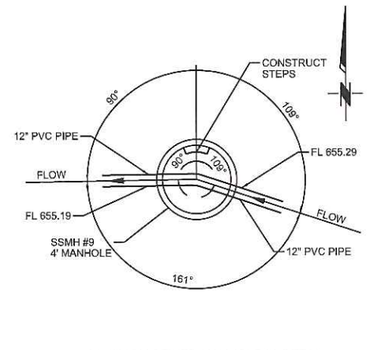

SANITARY SEWER MANHOLE #9 DETAIL

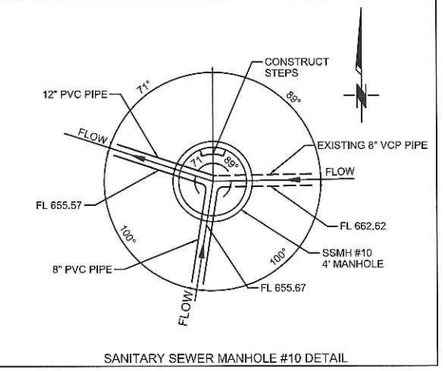

SANITARY SEWER MANHOLE #10 DETAIL

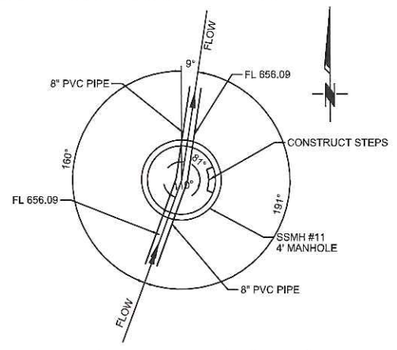

SANITARY SEWER MANHOLE #11 DETAIL

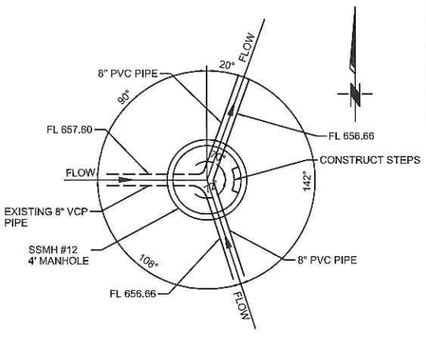

SANITARY SEWER MANHOLE #12 DETAIL

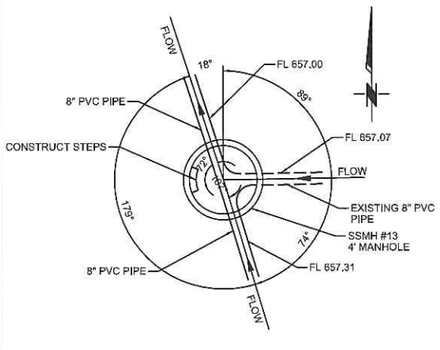

SANITARY SEWER MANHOLE #13 DETAIL

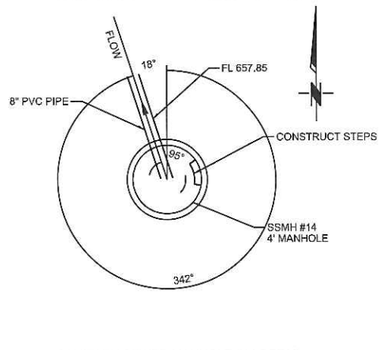

SANITARY SEWER MANHOLE #14 DETAIL

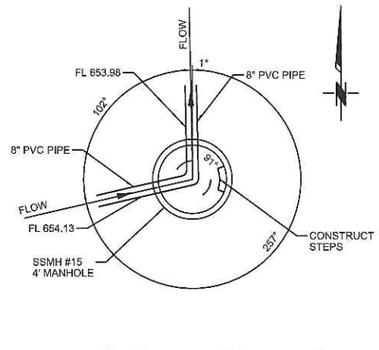

SANITARY SEWER MANHOLE #15 DETAIL

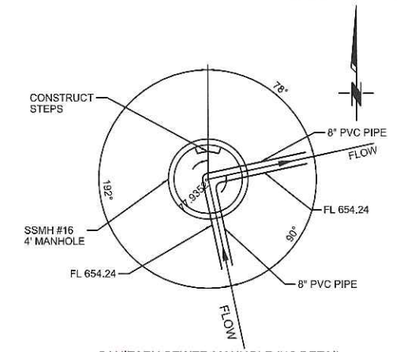

SANITARY SEWER MANHOLE #16 DETAIL

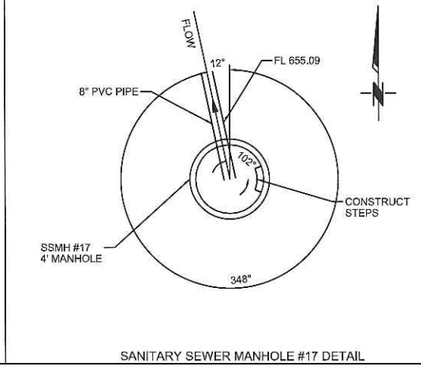

SANITARY SEWER MANHOLE #17 DETAIL

NOTE:
ALL PROPOSED PIPE UP TO 15" LESS THAN 16 FT DEEP SHALL BE PVC SDR 26.

BEFORE YOU DIG CALL OKIE 1-800-522-OKIE

LICENSED PROFESSIONAL ENGINEER SARA ARZUAGA 23701 OKLAHOMA 07/23/2020

REVISION	BY	DATE

MANHOLE DETAILS

PROJECT NO ES. 2019-08

NON-ARTERIAL STREET MZ 6028-W

CITY OF TULSA, OKLAHOMA
ENGINEERING SERVICES DEPARTMENT

PLANS AND ESTIMATES PREPARED BY:

CIVIL/ENVIRONMENTAL ENGINEERING
8179 EAST. 41ST STREET.
TULSA, OKLAHOMA 74145
PHONE:(918)749-5800 FAX:(918)749-5858
C.A. NO.: 1371 - EXPIRES: 6/30/22

PLAN SCALE:	DRAWN	SL	7/20	APPROVED:
	DESIGNED	SA	7/20	
	SURVEY	AB	8/16	
PROFILE SCALE	PROJ. MNGR.			
HORIZONTAL:	LEAD ENGR.			
	FIELD MNGR.			
VERTICAL:	RECOMMENDED:			
	DEPUTY DIRECTOR			CITY ENGINEER

FILE: 2018-53-055-01\DESIGN\SHTS\MANHOLE_DETAIL	DATE	07/2020
ATLAS PAGE NO. 235	SHEET	112 OF 161 SHEETS

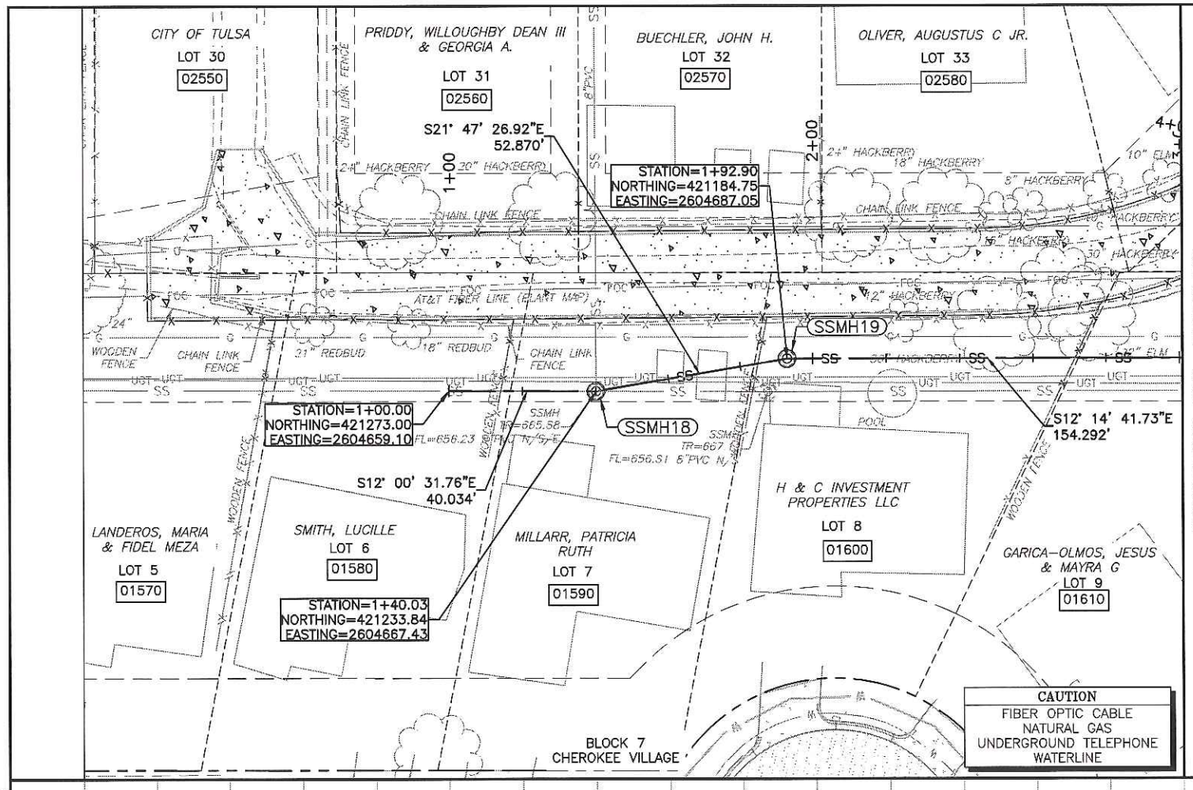

MATCHLINE STA. 3+00.00
SEE SHEET 114

0 10 20 40
SCALE IN FEET

LEGEND:

- FULL DEPTH RECONSTRUCTION
- 2" MILL AND OVERLAY
- TYPE 1 AC PATCH
- CONSTRUCT CONCRETE DRIVEWAY
- CONSTRUCT 2'-2" CURB & GUTTER
- CONCRETE CHANNEL (SEE SHEETS 31-32)

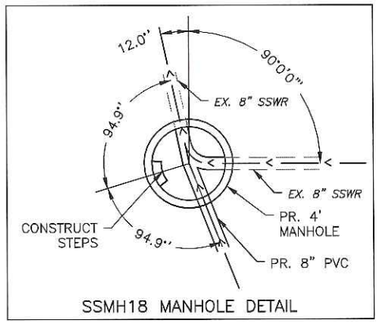

SSMH18 MANHOLE DETAIL

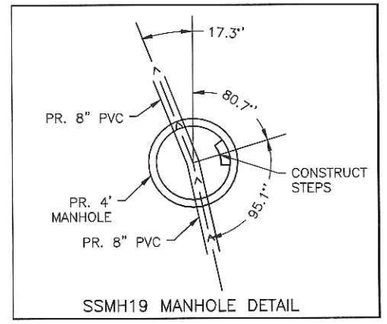

SSMH19 MANHOLE DETAIL

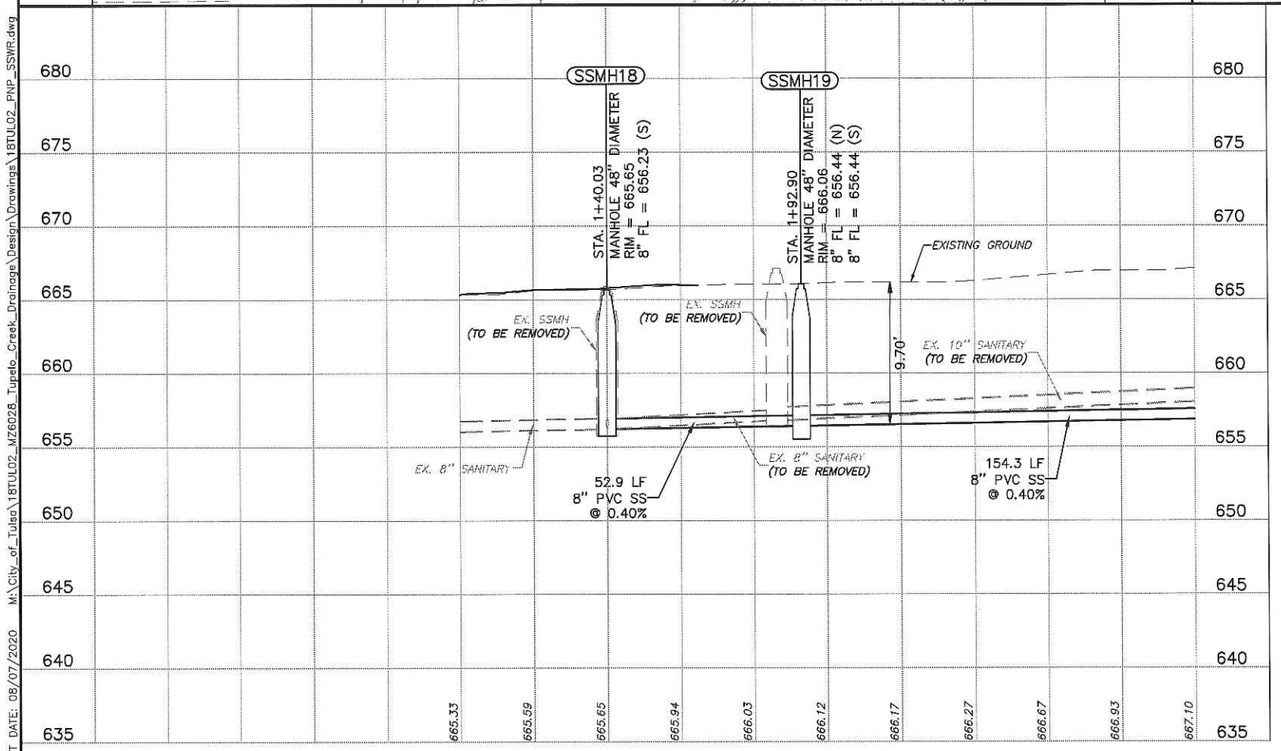

OKIE 811
Know what's below. Call before you dig.

LICENSED PROFESSIONAL ENGINEER
BENJAMIN W. FLETCHER
24921
OKLAHOMA

8/7/2020

SANITARY SEWER PLAN & PROFILE

PROJECT #144628-W, TMUA-W 18-16

MAINTENANCE ZONE 6028-W
TUPELO CREEK DRAINAGE

CITY OF TULSA, OKLAHOMA
ENGINEERING SERVICES DEPARTMENT

PLANS AND ESTIMATES PREPARED BY:
Meshek & Associates, L.L.C.
1437 S. Boulder Avenue, Suite 1550 Tulsa, OK 74119 (918)392-5620

REVISION	BY	DATE

PLAN SCALE 1" = 20'
PROFILE SCALE HORIZONTAL: 1" = 20' VERTICAL: 1" = 5'

DRAWN	SCB	08/20
DESIGNED	BWF	08/20
SURVEY	AB	08/18
PROJ. MGR.		
LEAD ENGR.		
FIELD MGR.		
RECOMMENDED DESIGN MANAGER		
FILE:		
DRAWING:		

APPROVED:
CITY ENGINEER
DATE:
ATLAS PAGE NO. 235
SHEET 113 OF 161 SHEETS

PRINT DATE: 08/07/2020 M:\City_of_Tulsa\18TUL02_MZ6028_Tupelo_Creek_Drainage\Design\Drawings\18TUL02_PNP_SSWR.dwg

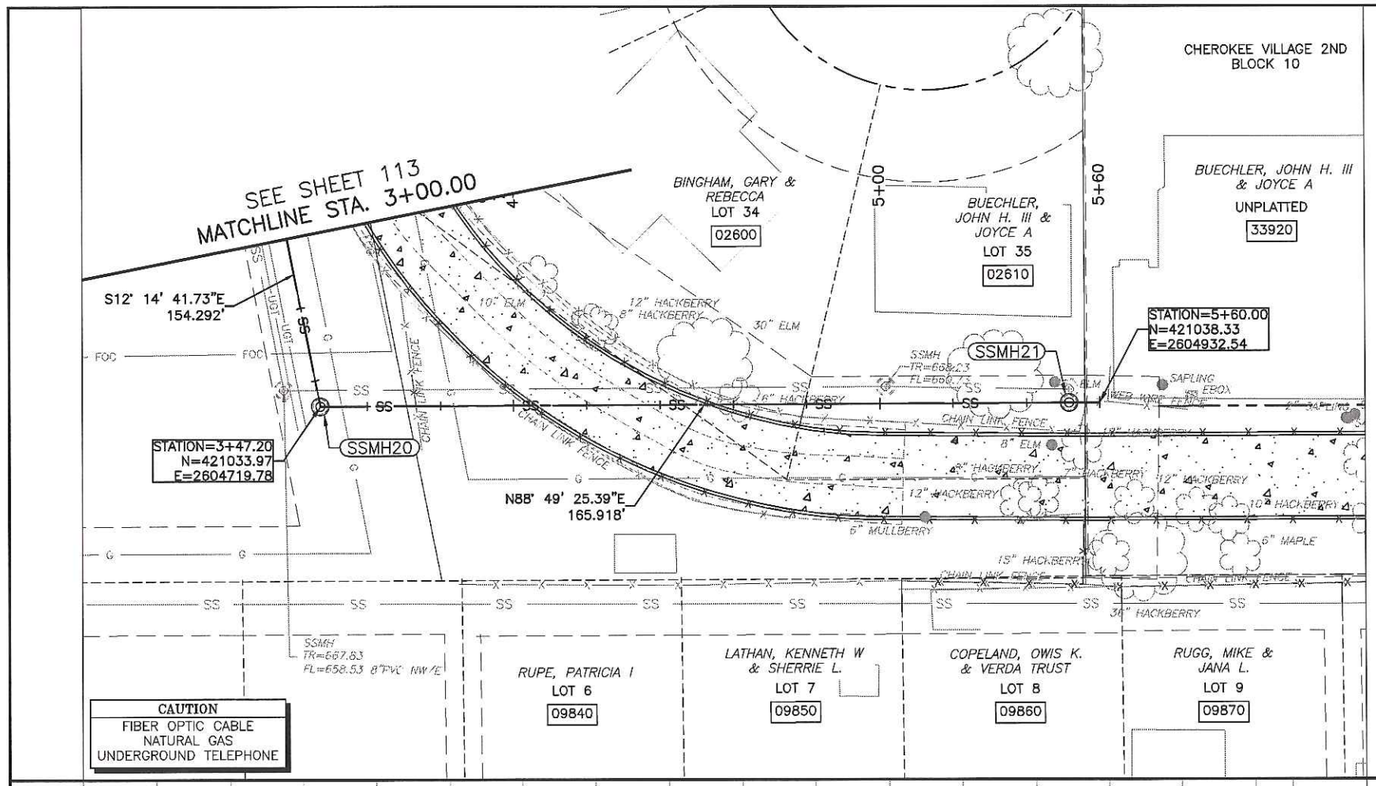

LEGEND:

- FULL DEPTH RECONSTRUCTION
- 2" MILL AND OVERLAY
- TYPE 1 AC PATCH
- CONSTRUCT CONCRETE DRIVEWAY
- CONSTRUCT 2'-2" CURB & GUTTER
- CONCRETE CHANNEL (SEE SHEETS 31-32)

N

0 10 20 40
SCALE IN FEET

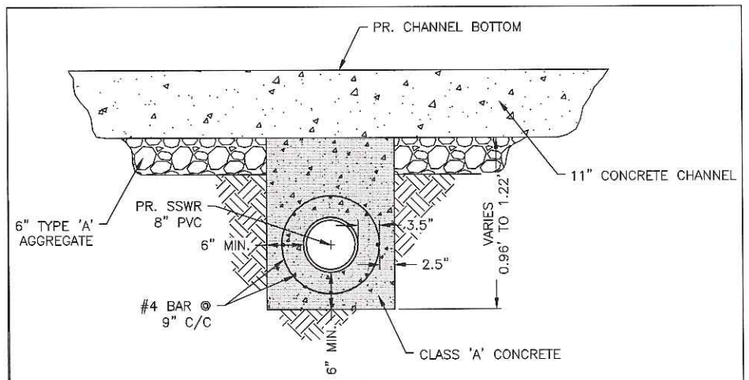

SANITARY SEWER ENCASEMENT DETAIL

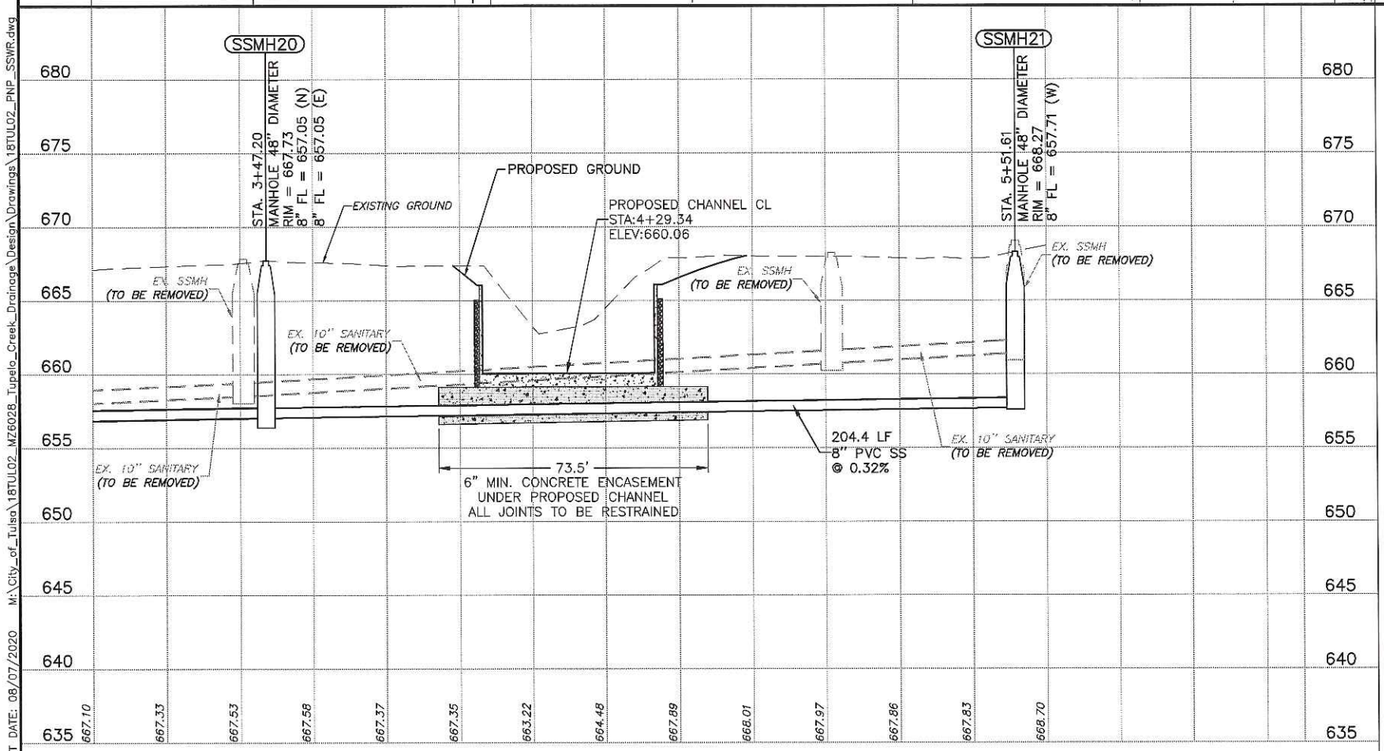

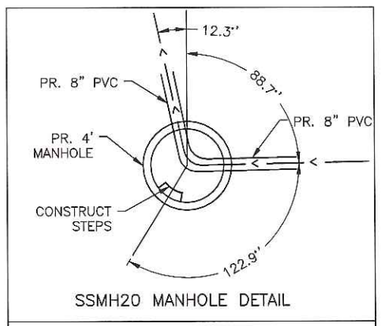

SSMH20 MANHOLE DETAIL

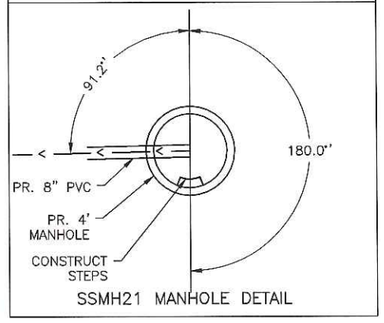

SSMH21 MANHOLE DETAIL

PROFESSIONAL ENGINEER
BENJAMIN W. FLETCHER
24921
OKLAHOMA
8/7/2020

OKIE 811
Know what's below. Call before you dig.

SANITARY SEWER PLAN & PROFILE

PROJECT #144628-W, TMUA-W 18-16

MAINTENANCE ZONE 6028-W
TUPELO CREEK DRAINAGE

CITY OF TULSA, OKLAHOMA
ENGINEERING SERVICES DEPARTMENT

PLANS AND ESTIMATES PREPARED BY:
Meshek & Associates, L.L.C.
1437 S. Boulder Avenue, Suite 1550 Tulsa, OK 74119 (918)392-5620

REVISION	BY	DATE

PLAN SCALE	DRAWN	SCB	08/20
1" = 20'	DESIGNED	BWF	08/20
	SURVEY	AB	08/18
PROFILE SCALE	PROJ. MGR.		
HORIZONTAL: 1" = 20'	LEAD ENGR.		
	FIELD MGR.		
VERTICAL: 1" = 5'	RECOMMENDED DESIGN MANAGER		
FILE:	DRAWING:		
ATLAS PAGE NO. 235			

APPROVED:

CITY ENGINEER

DATE:

SHEET 114 OF 161 SHEETS

PRINT DATE: 08/07/2020 M:\City_of_Tulsa\18TUL02_MZ6028_Tupelo_Creek_Drainage\Design\Drawings\18TUL02_PNP_SSWR.dwg

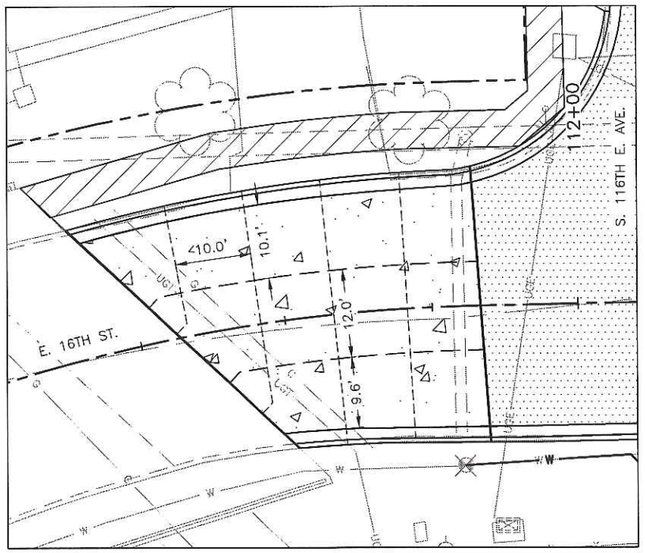



0 5 10 20
SCALE IN FEET

N

LEGEND

- CONTRACTION JOINT
- LONGITUDINAL JOINT
- ISOLATION JOINT
- PCC PAVEMENT
- AC PAVEMENT
- SIDEWALK
- CURB & GUTTER

OKIE 811
Know what's below. Call before you dig.

JOINT LAYOUT

PROJECT #144628-W, TMUA-W 18-16

MAINTENANCE ZONE 6028-W
TUPELO CREEK DRAINAGE

CITY OF TULSA, OKLAHOMA
ENGINEERING SERVICES DEPARTMENT

PLANS AND ESTIMATES PREPARED BY:
Meshek & Associates, L.L.C.
1437 S. Boulder Avenue, Suite 1550 Tulsa, OK 74119 (918)392-5620

LICENSED PROFESSIONAL ENGINEER
BENJAMIN W. FLETCHER
24921
OKLAHOMA

8/7/2020

REVISION	BY	DATE

PLAN SCALE	DRAWN	SCB	08/20
1" = 10'	DESIGNED	BWF	08/20
	SURVEY	AB	08/18
PROFILE SCALE	PROJ. MGR.		
HORIZONTAL: N/A	LEAD ENGR.		
	FIELD MGR.		
VERTICAL: N/A	RECOMMENDED		
	DESIGN MANAGER		
FILE:	DRAWING:		
ATLAS PAGE NO. 235			

APPROVED:

CITY ENGINEER

DATE:

SHEET 115 OF 161 SHEETS

PRINT DATE: 08/07/2020 M:\City_of_Tulsa\18TUL02_MZ6028_Tupelo_Creek_Drainage\Design\Drawings\18TUL02_JOINT_LAYOUT.dwg

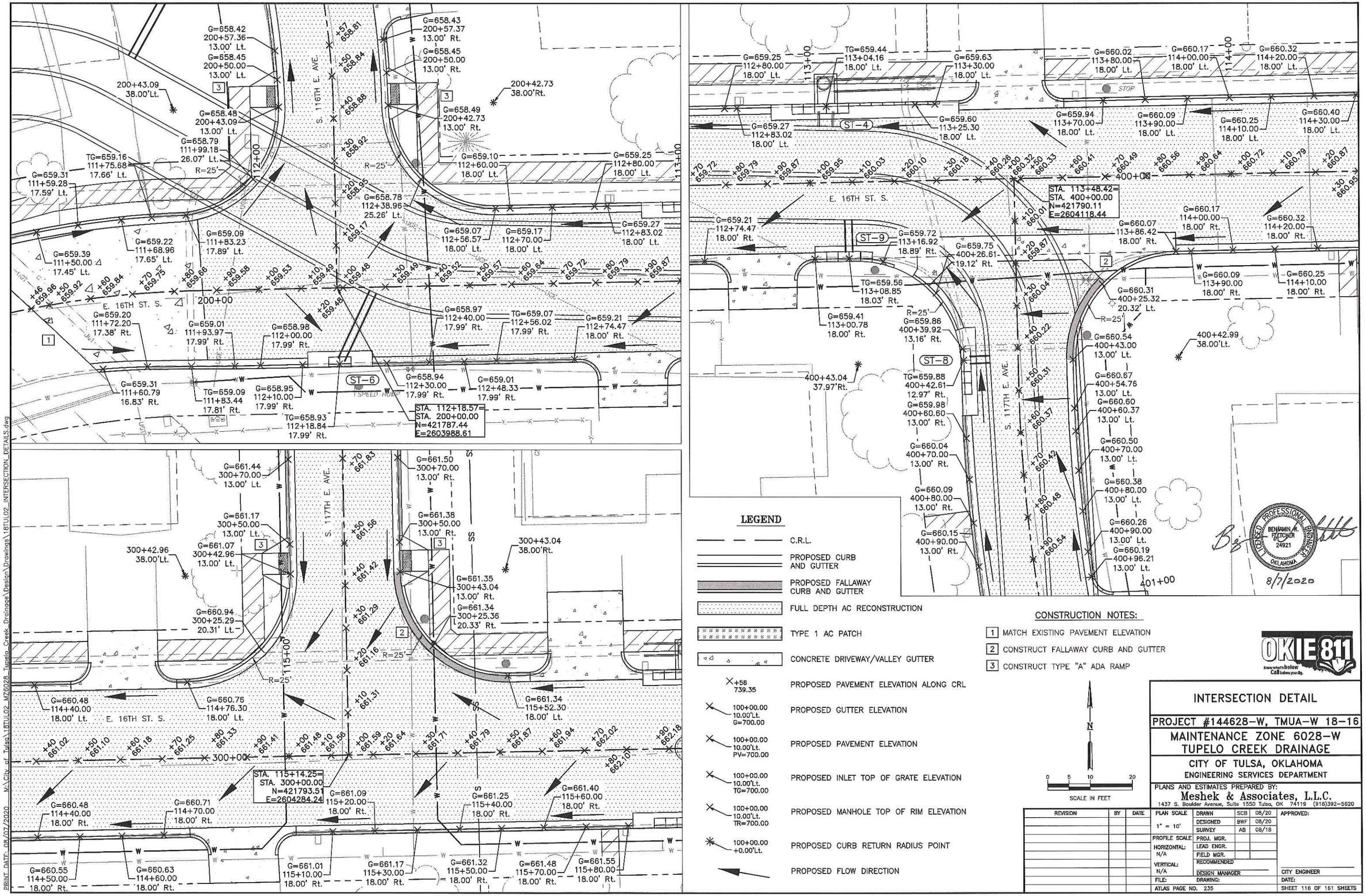

INTERSECTION DETAIL

PROJECT #144628-W, TMUA-W 18-16

MAINTENANCE ZONE 6028-W
TUPELO CREEK DRAINAGE

CITY OF TULSA, OKLAHOMA
ENGINEERING SERVICES DEPARTMENT

PLANS AND ESTIMATES PREPARED BY:
Meshek & Associates, L.L.C.
1437 S. Boulder Avenue, Suite 1550 Tulsa, OK 74119 (918)392-5520

REVISION	BY	DATE

PLAN SCALE 1" = 10'	DRAWN	SCB	08/20
	DESIGNED	BWF	08/20
	SURVEY	AB	08/18
PROFILE SCALE	PROJ. MGR.		
HORIZONTAL: N/A	LEAD ENGR.		
	FIELD MGR.		
VERTICAL: N/A	RECOMMENDED DESIGN MANAGER		
FILE:	DRAWING:		
ATLAS PAGE NO. 235			

APPROVED:

CITY ENGINEER

DATE:

SHEET 116 OF 161 SHEETS

PRINT DATE: 08/07/2020 M:\City of Tulsa\18TUL02_MZ6028 Tupelo Creek Drainage\Design Drawings\18TUL02_INTERSECTION_DETAILS.dwg

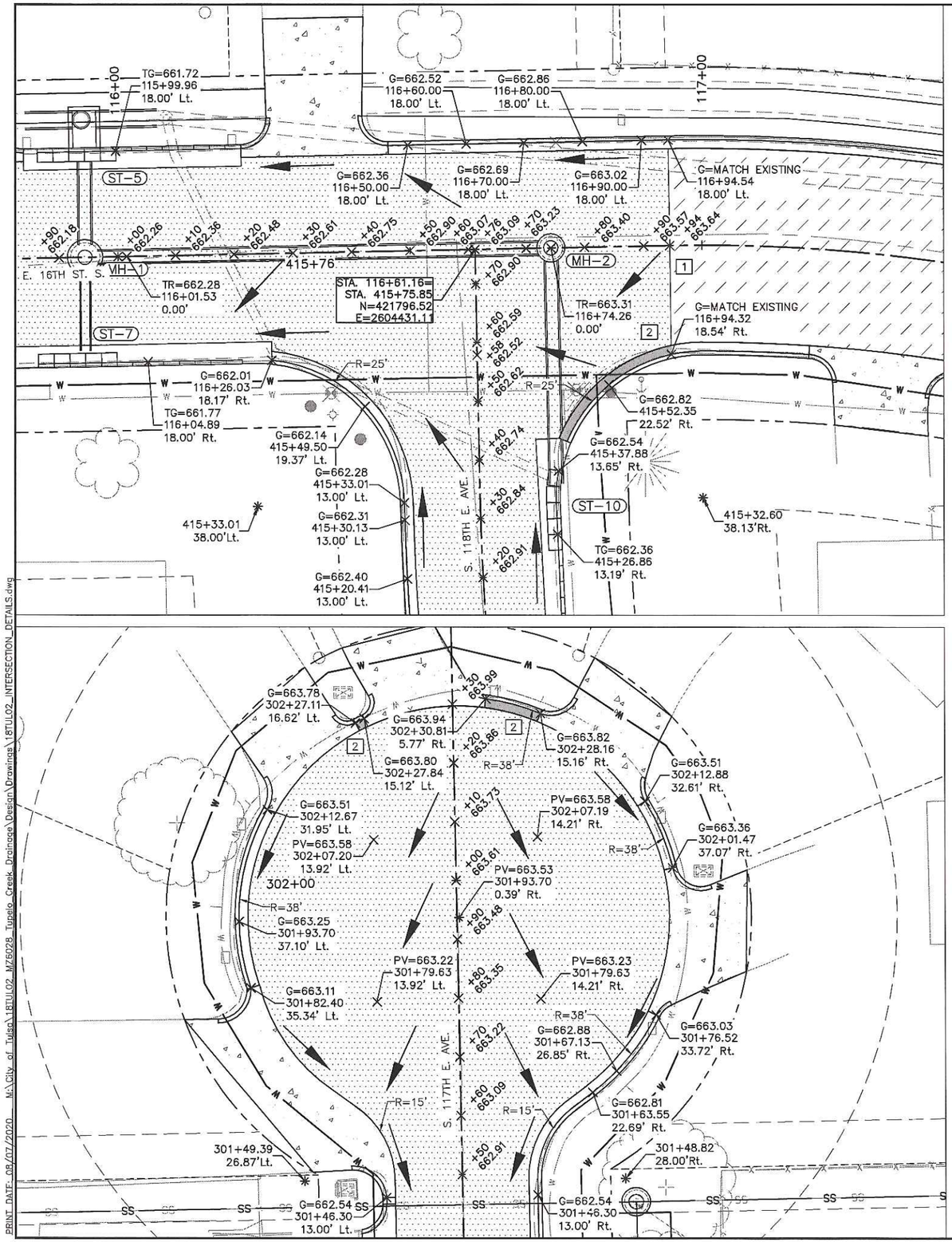

LEGEND

- C.R.L.
- PROPOSED CURB AND GUTTER
- PROPOSED FALLAWAY CURB AND GUTTER
- FULL DEPTH AC RECONSTRUCTION
- TYPE 1 AC PATCH
- CONCRETE DRIVEWAY/VALLEY GUTTER
- +56 739.35 — PROPOSED PAVEMENT ELEVATION ALONG CRL
- 100+00.00 10.00'Lt. G=700.00 — PROPOSED GUTTER ELEVATION
- 100+00.00 10.00'Lt. PV=700.00 — PROPOSED PAVEMENT ELEVATION
- 100+00.00 10.00'Lt. TG=700.00 — PROPOSED INLET TOP OF GRATE ELEVATION
- 100+00.00 10.00'Lt. TR=700.00 — PROPOSED MANHOLE TOP OF RIM ELEVATION
- 100+00.00 +0.00'Lt. — PROPOSED CURB RETURN RADIUS POINT
- PROPOSED FLOW DIRECTION

N

0 5 10 20

SCALE IN FEET

CONSTRUCTION NOTES:

1. MATCH EXISTING PAVEMENT ELEVATION
2. CONSTRUCT FALLAWAY CURB AND GUTTER
3. CONSTRUCT TYPE "A" ADA RAMP

OKIE 811 Know what's below. Call before you dig.

LICENSED PROFESSIONAL ENGINEER BENJAMIN W. FLETCHER 24921 OKLAHOMA

8/7/2020

INTERSECTION DETAIL

PROJECT #144628-W, TMUA-W 18-16

MAINTENANCE ZONE 6028-W
TUPELO CREEK DRAINAGE

CITY OF TULSA, OKLAHOMA
ENGINEERING SERVICES DEPARTMENT

PLANS AND ESTIMATES PREPARED BY:
Meshek & Associates, L.L.C.
1437 S. Boulder Avenue, Suite 1550 Tulsa, OK 74119 (918)392-5620

REVISION	BY	DATE

PLAN SCALE 1" = 10'	DRAWN	SCB	08/20
	DESIGNED	BWF	08/20
	SURVEY	AB	08/18
PROFILE SCALE	PROJ. MGR.		
HORIZONTAL: N/A	LEAD ENGR.		
	FIELD MGR.		
VERTICAL: N/A	RECOMMENDED DESIGN MANAGER		
FILE:	DRAWING:		
ATLAS PAGE NO. 235			

APPROVED:

CITY ENGINEER

DATE:

SHEET 117 OF 161 SHEETS

PRINT DATE: 08/07/2020 M:\City of Tulsa\18TUL02_MZ6028_Tupelo_Creek_Drainage\Design Drawings\18TUL02_INTERSECTION_DETAILS.dwg

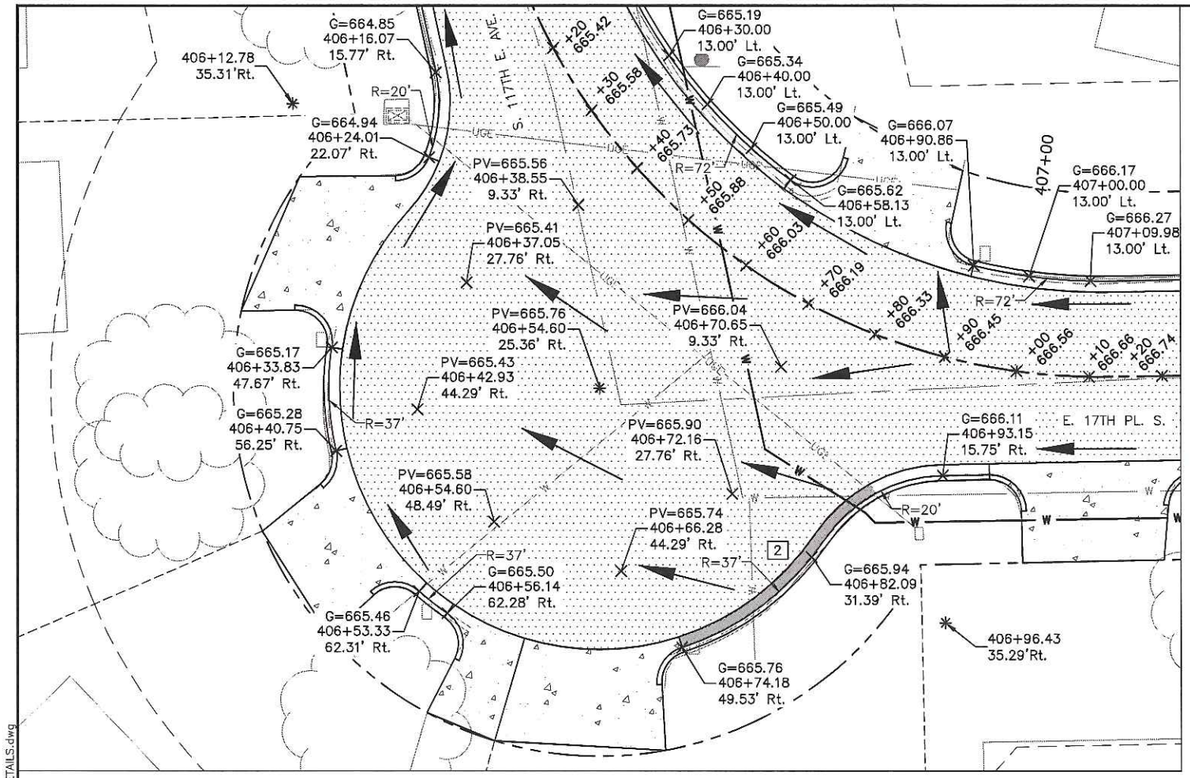

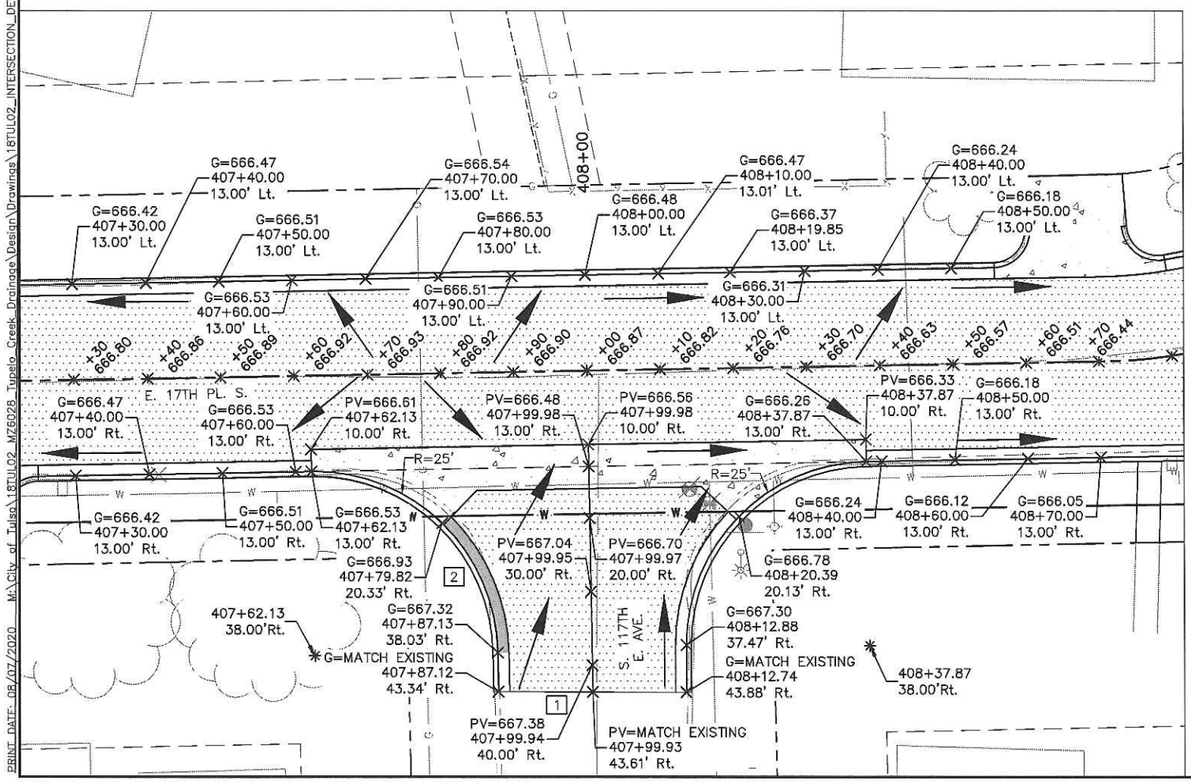

N

0 5 10 20

SCALE IN FEET

LEGEND

- C.R.L.
- PROPOSED CURB AND GUTTER
- PROPOSED FALLAWAY CURB AND GUTTER
- FULL DEPTH AC RECONSTRUCTION
- TYPE 1 AC PATCH
- CONCRETE DRIVEWAY OR VALLEY GUTTER
- +55 739.35 — PROPOSED PAVEMENT ELEVATION ALONG CRL
- 100+00.00 10.00'Lt. G=700.00 — PROPOSED GUTTER ELEVATION
- 100+00.00 10.00'Lt. PV=700.00 — PROPOSED PAVEMENT ELEVATION
- 100+00.00 10.00'Lt. TG=700.00 — PROPOSED INLET TOP OF GRATE ELEVATION
- 100+00.00 10.00'Lt. TR=700.00 — PROPOSED MANHOLE TOP OF RIM ELEVATION
- 100+00.00 +0.00'Lt. — PROPOSED CURB RETURN RADIUS POINT
- PROPOSED FLOW DIRECTION

CONSTRUCTION NOTES:

1. MATCH EXISTING PAVEMENT ELEVATION
2. CONSTRUCT FALLAWAY CURB AND GUTTER
3. CONSTRUCT TYPE "A" ADA RAMP

LICENSED PROFESSIONAL ENGINEER
BENJAMIN W. FLETCHER
24921
OKLAHOMA

8/7/2020

OKIE 811
Know what's below. Call before you dig.

INTERSECTION DETAIL

PROJECT #144628-W, TMUA-W 18-16

MAINTENANCE ZONE 6028-W
TUPELO CREEK DRAINAGE

CITY OF TULSA, OKLAHOMA
ENGINEERING SERVICES DEPARTMENT

PLANS AND ESTIMATES PREPARED BY:
Meshek & Associates, L.L.C.
1437 S. Boulder Avenue, Suite 1550 Tulsa, OK 74119 (918)392-5620

REVISION	BY	DATE

PLAN SCALE 1" = 10'	DRAWN	SCB	08/20
	DESIGNED	BWF	08/20
	SURVEY	AB	08/18
PROFILE SCALE	PROJ. MGR.		
HORIZONTAL: N/A	LEAD ENGR.		
	FIELD MGR.		
VERTICAL: N/A	RECOMMENDED DESIGN MANAGER		
FILE:	DRAWING:		
ATLAS PAGE NO. 235			

APPROVED:

CITY ENGINEER

DATE:

SHEET 118 OF 161 SHEETS

PRINT DATE: 08/07/2020 M:\City of Tulsa\18TUL02_MZ6028_Tupelo_Creek_Drainage\Design\Drawings\18TUL02_INTERSECTION_DETAILS.dwg

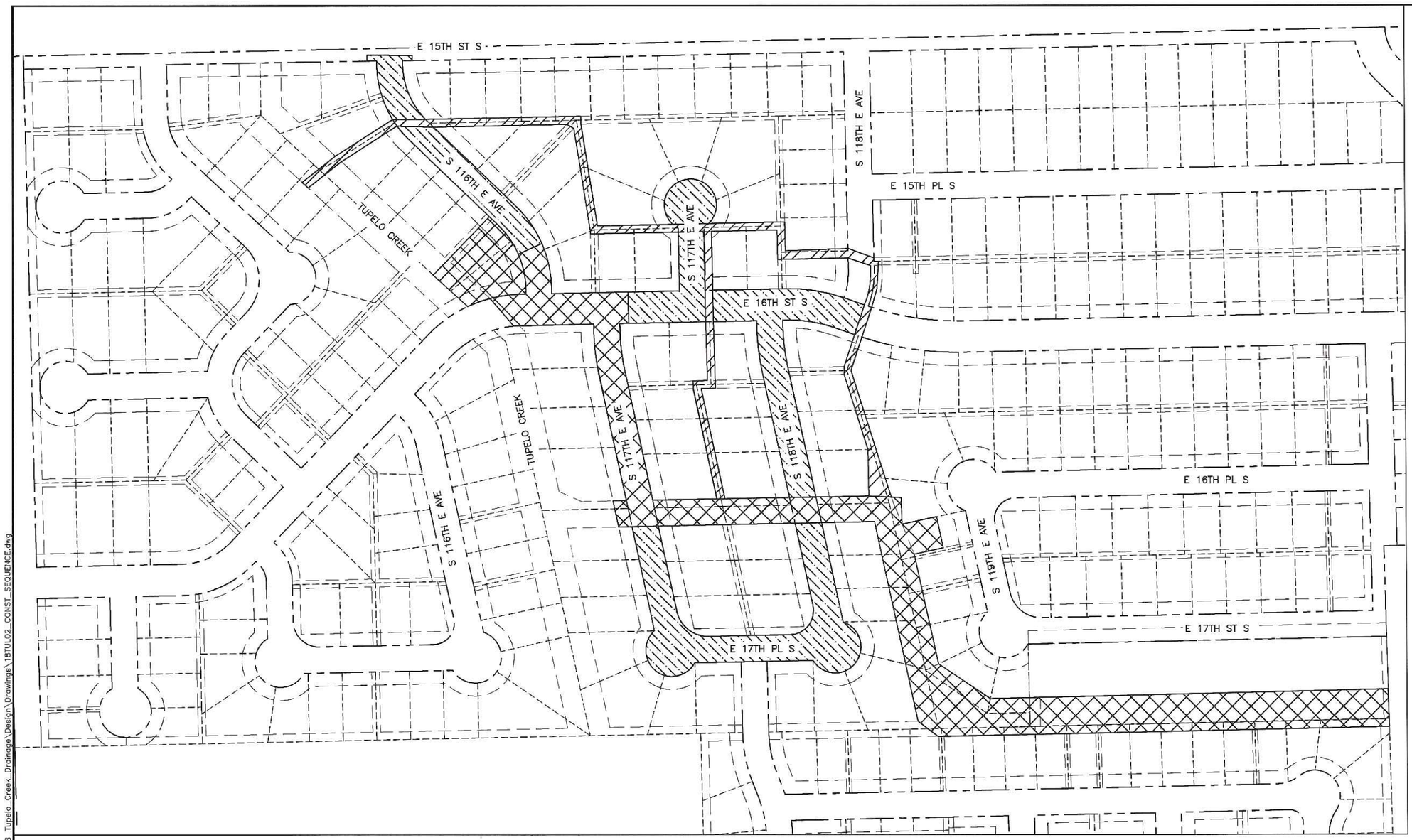

N

0 50 100 200

SCALE IN FEET

LEGEND

- CONSTRUCTION PHASE 1
- CONSTRUCTION PHASE 2
- CONSTRUCTION PHASE 3

TRAFFIC CONTROL NOTES:

1. ALL TEMPORARY TRAFFIC CONTROL SHALL CONFORM TO MUTCD 2009 SPECIFICATIONS.
2. ALL TEMPORARY TRAFFIC CONTROL SIGNS SHALL BE RETROREFLECTIVE ALUMINUM SHEETING WITH APPROPRIATE FLASHING WARNING LIGHTS.

SEQUENCE OF CONSTRUCTION

CONSTRUCTION PHASE 1:

1. SET UP TEMPORARY TRAFFIC CONTROL MEASURES
2. INSTALL TEMPORARY EROSION CONTROL ITEMS
3. GRADING AND CHANNEL REHABILITATION
4. INSTALLATION OF SANITARY SEWER ITEMS
5. INSTALLATION OF STORMWATER ITEMS
6. INSTALLATION OF WATERLINE ITEMS
7. RECONSTRUCT DISTURBED ROADWAY SECTIONS
8. COMPLETE OTHER ROADWAY REHABILITATION ITEMS
9. PERFORM RIGHT-OF-WAY RESTORATION MEASURES
10. REMOVE TEMPORARY EROSION CONTROL ITEMS
11. REMOVE TEMPORARY TRAFFIC CONTROL ITEMS
12. COMPLETE ALL WORK ITEMS BEFORE BEGINNING PHASE 2

CONSTRUCTION PHASE 2:

1. SET UP TEMPORARY TRAFFIC CONTROL MEASURES
2. INSTALL TEMPORARY EROSION CONTROL ITEMS
3. INSTALLATION OF STORMWATER ITEMS
4. INSTALLATION OF WATERLINE ITEMS
5. RECONSTRUCT DISTURBED ROADWAY SECTIONS
6. COMPLETE OTHER ROADWAY REHABILITATION ITEMS
7. PERFORM RIGHT-OF-WAY RESTORATION MEASURES
8. REMOVE TEMPORARY EROSION CONTROL ITEMS
9. REMOVE TEMPORARY TRAFFIC CONTROL ITEMS
10. COMPLETE ALL WORK ITEMS BEFORE BEGINNING PHASE 3

CONSTRUCTION PHASE 3:

1. SET UP TEMPORARY TRAFFIC CONTROL MEASURES
2. INSTALL TEMPORARY EROSION CONTROL ITEMS
3. INSTALLATION OF STORMWATER ITEMS
4. INSTALLATION OF WATERLINE ITEMS
5. RECONSTRUCT DISTURBED ROADWAY SECTIONS
6. COMPLETE OTHER ROADWAY REHABILITATION ITEMS
7. PERFORM RIGHT-OF-WAY RESTORATION MEASURES
8. REMOVE TEMPORARY EROSION CONTROL ITEMS
9. REMOVE TEMPORARY TRAFFIC CONTROL ITEMS

LICENSED PROFESSIONAL ENGINEER
BENJAMIN W. FLETCHER
24921
OKLAHOMA

8/7/2020

OKIE 811 Know what's below Call before you dig.

SEQUENCE OF CONSTRUCTION

PROJECT #144628-W, TMUA-W 18-16

MAINTENANCE ZONE 6028-W
TUPELO CREEK DRAINAGE

CITY OF TULSA, OKLAHOMA
ENGINEERING SERVICES DEPARTMENT

PLANS AND ESTIMATES PREPARED BY:
Meshek & Associates, L.L.C.
1437 S. Boulder Avenue, Suite 1550 Tulsa, OK 74119 (918)392-5620

REVISION	BY	DATE

PLAN SCALE	DRAWN	SCB	08/20	APPROVED:
1" = 100'	DESIGNED	BWF	08/20	
	SURVEY	AB	08/18	
PROFILE SCALE	PROJ. MGR.			
HORIZONTAL: N/A	LEAD ENGR.			
	FIELD MGR.			
VERTICAL: N/A	RECOMMENDED			
	DESIGN MANAGER			CITY ENGINEER
FILE:	DRAWING:			DATE:
ATLAS PAGE NO. 235				SHEET 119 OF 161 SHEETS

PRINT DATE: 08/07/2020 M:\City_of_Tulsa\18TUL02_MZ6028_Tupelo_Creek_Drainage\Design\Drawings\18TUL02_CONST_SEQUENCE.dwg

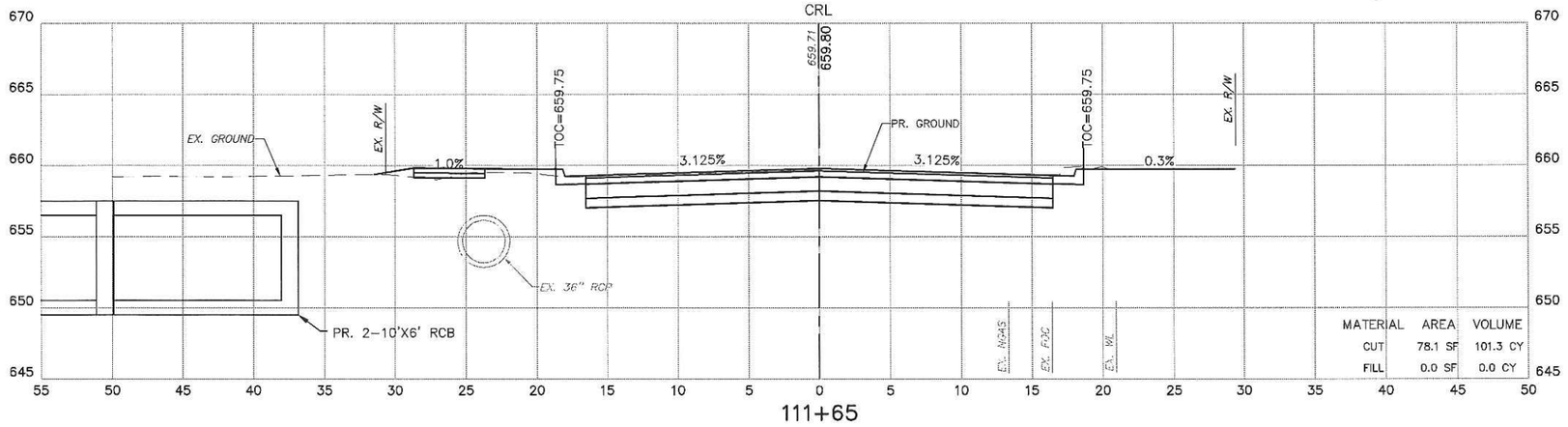

PRINT DATE: 08/07/2020 M:\City_of_Tulsa\18TUL02_WZ6028_Tupelo_Creek_Drainage\Design\Drawings\18TUL02_X_SECTIONS_E_16TH_ST.dwg

CROSS SECTIONS

PROJECT #144628-W, TMUA-W 18-16

MAINTENANCE ZONE 6028-W
TUPELO CREEK DRAINAGE

CITY OF TULSA, OKLAHOMA
ENGINEERING SERVICES DEPARTMENT

PLANS AND ESTIMATES PREPARED BY:
Meshek & Associates, L.L.C.
1437 S. Boulder Avenue, Suite 1550 Tulsa, OK 74119 (918)392-5620

REVISION	BY	DATE

PLAN SCALE	DRAWN	SCB	08/20
N/A	DESIGNED	BWF	08/20
	SURVEY	AB	08/18
PROFILE SCALE	PROJ. MGR.		
HORIZONTAL: 1" = 5'	LEAD ENGR.		
	FIELD MGR.		
VERTICAL: 1" = 5'	RECOMMENDED DESIGN MANAGER		
FILE:	DRAWING:		
ATLAS PAGE NO. 235			

APPROVED:

CITY ENGINEER

DATE:

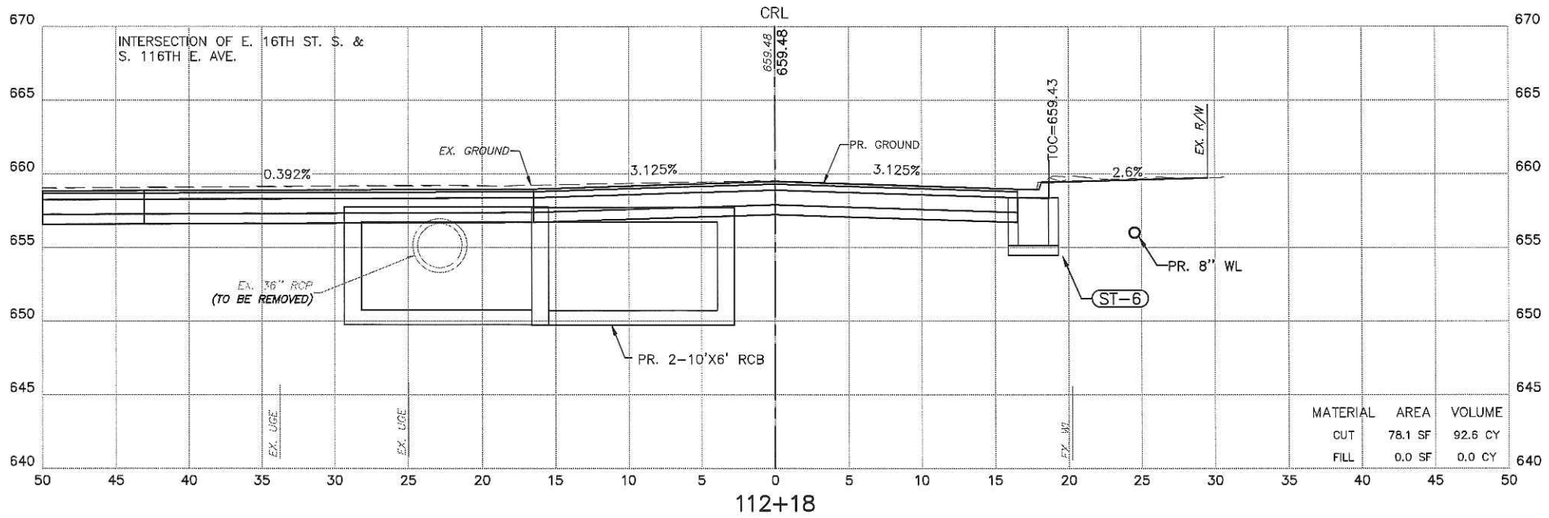

112+18

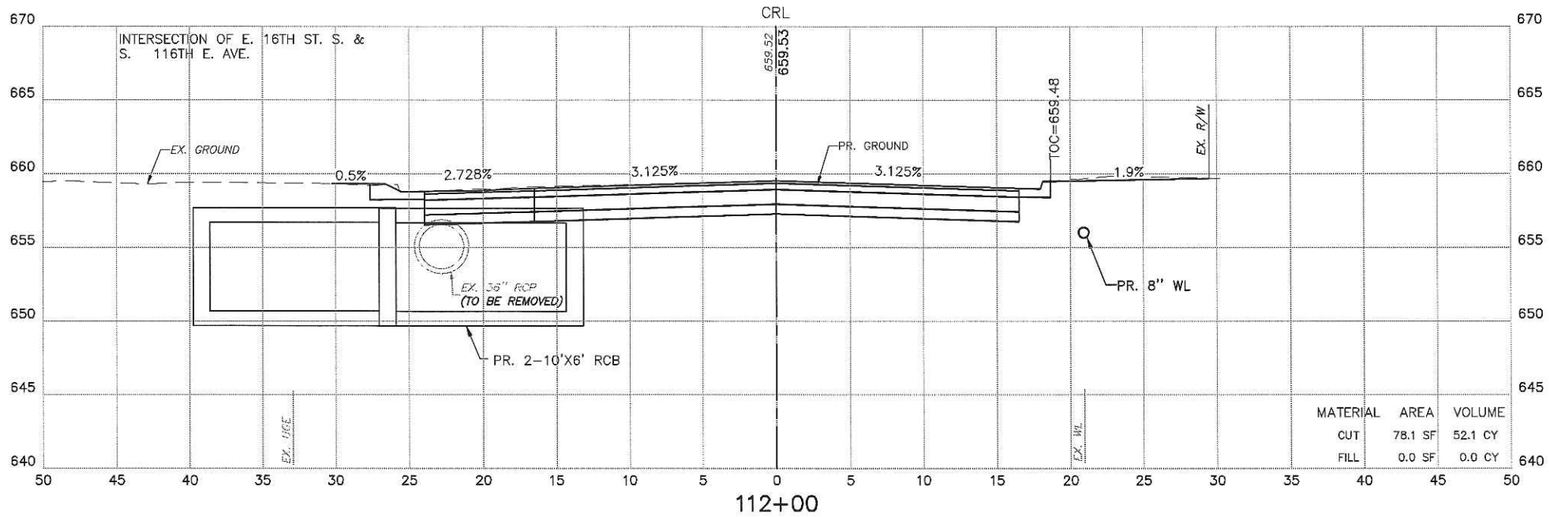

112+00

CROSS SECTIONS

PROJECT #144628-W, TMUA-W 18-16

MAINTENANCE ZONE 6028-W
TUPELO CREEK DRAINAGE

CITY OF TULSA, OKLAHOMA
ENGINEERING SERVICES DEPARTMENT

PLANS AND ESTIMATES PREPARED BY:
Meshek & Associates, L.L.C.
1437 S. Boulder Avenue, Suite 1550 Tulsa, OK 74119 (918)392-5620

REVISION	BY	DATE

PLAN SCALE	DRAWN	SCB	08/20	APPROVED:
N/A	DESIGNED	BWF	08/20	
	SURVEY	AB	08/18	
PROFILE SCALE	PROJ. MGR.			
HORIZONTAL: 1" = 5'	LEAD ENGR.			
	FIELD MGR.			
VERTICAL: 1" = 5'	RECOMMENDED DESIGN MANAGER			CITY ENGINEER
FILE:	DRAWING:			DATE:
ATLAS PAGE NO. 235				SHEET 121 OF 161 SHEETS

PRINT DATE: 08/07/2020 M:\City_of_Tulsa\18TUL02_MZ6028_Tupelo_Creek_Drainage\Design\Drawings\18TUL02_X_SECTIONS_E_16TH_ST.dwg

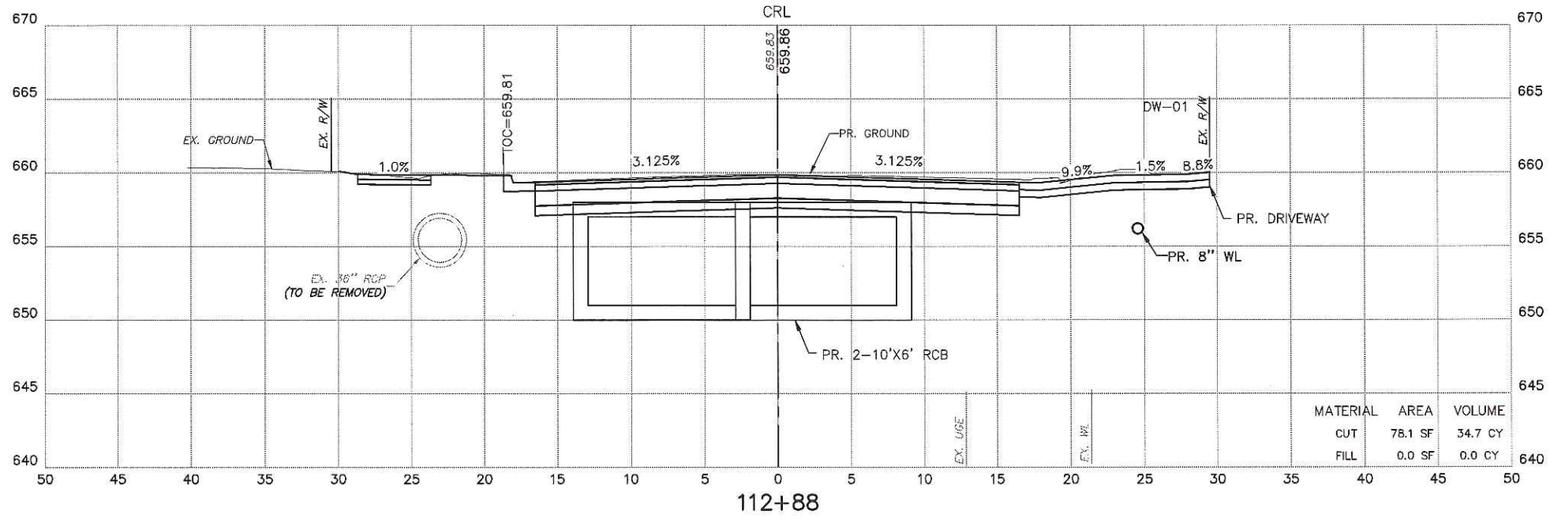

112+88

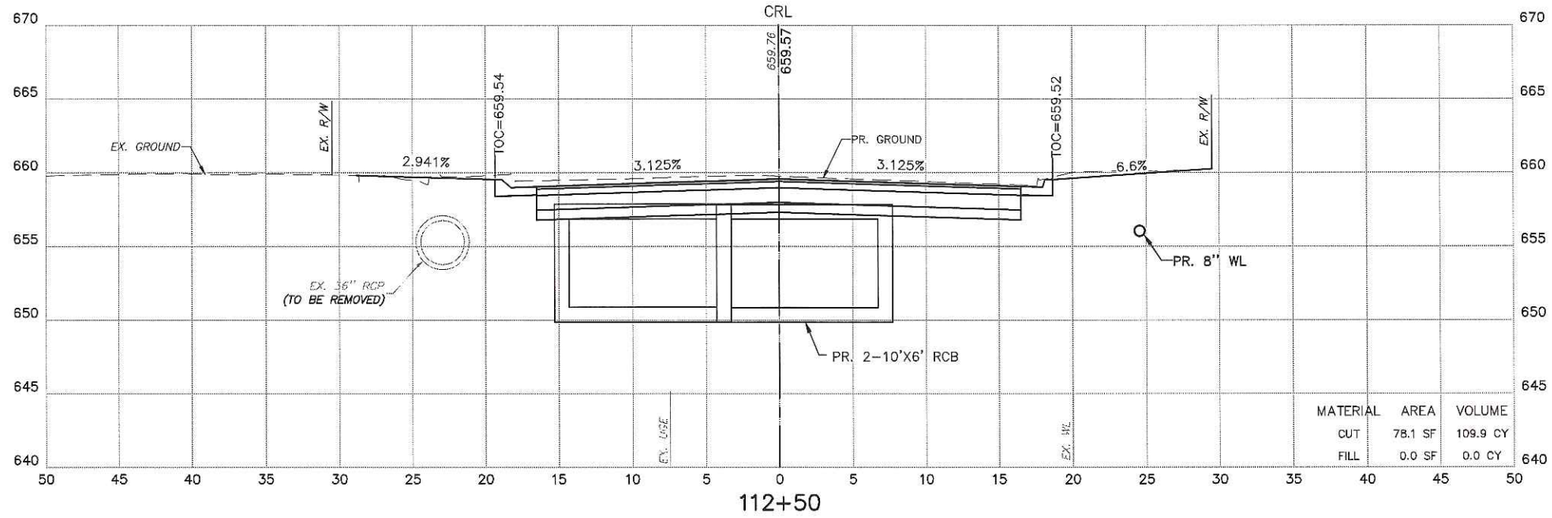

112+50

CROSS SECTIONS

PROJECT #144628-W, TMUA-W 18-16

MAINTENANCE ZONE 6028-W
TUPELO CREEK DRAINAGE

CITY OF TULSA, OKLAHOMA
ENGINEERING SERVICES DEPARTMENT

PLANS AND ESTIMATES PREPARED BY:
Meshek & Associates, L.L.C.
1437 S. Boulder Avenue, Suite 1550 Tulsa, OK 74119 (918)392-5620

REVISION	BY	DATE

PLAN SCALE	DRAWN	SCB	08/20
N/A	DESIGNED	BWF	08/20
	SURVEY	AB	08/18
PROFILE SCALE	PROJ. MGR.		
HORIZONTAL: 1" = 5'	LEAD ENGR.		
	FIELD MGR.		
VERTICAL: 1" = 5'	RECOMMENDED		
	DESIGN MANAGER		
FILE:	DRAWING:		
ATLAS PAGE NO. 235			

APPROVED:

CITY ENGINEER

DATE:

SHEET 122 OF 161 SHEETS

PRINT DATE: 08/07/2020 M:\City_of_Tulsa\18TUL02_MZ6028_Tupelo_Creek_Drainage\Design\Drawings\18TUL02_X_SECTIONS_E_16TH_ST.dwg

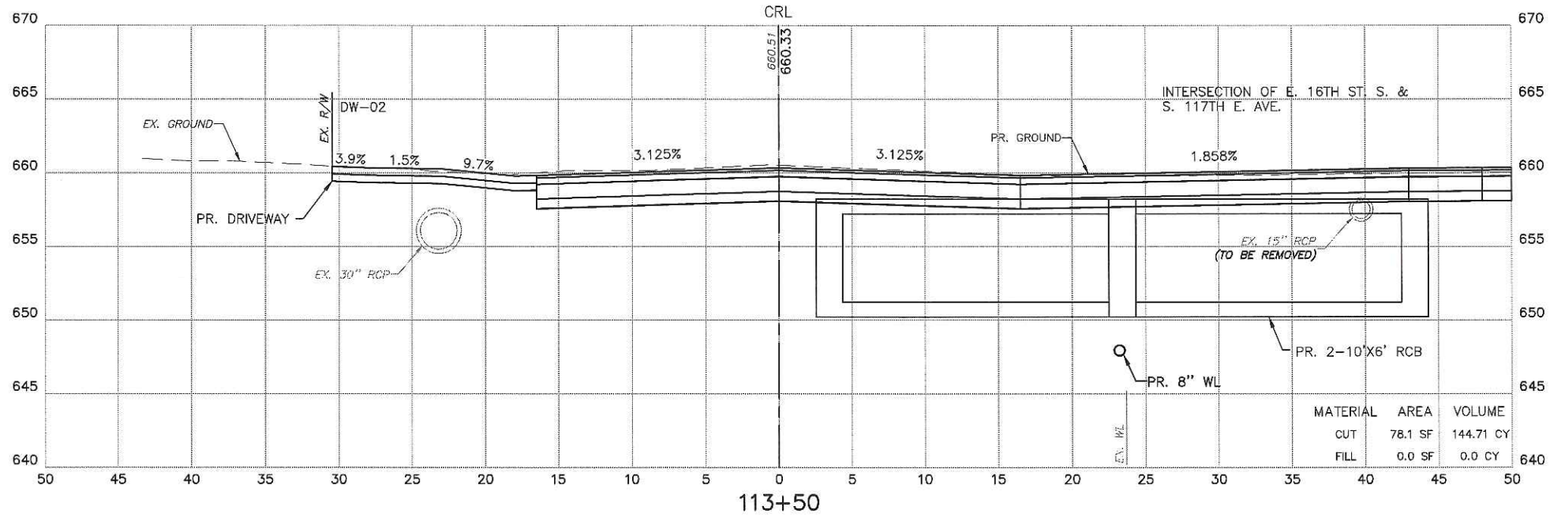

113+50

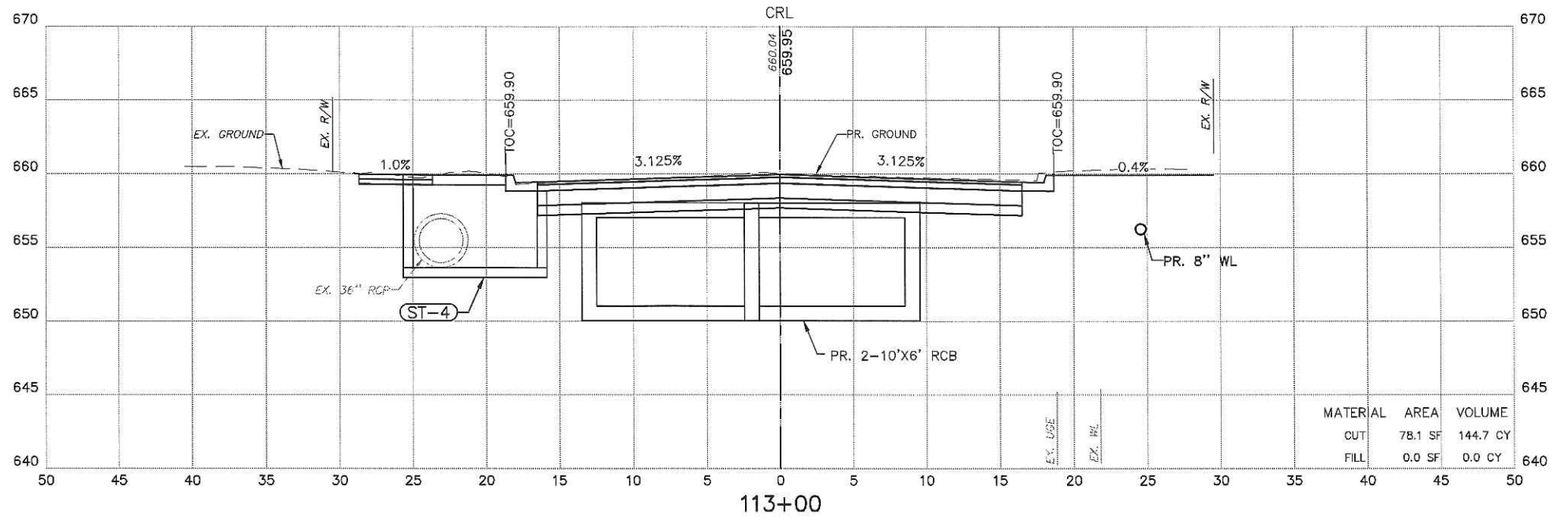

113+00

CROSS SECTIONS

PROJECT #144628-W, TMUA-W 18-16

MAINTENANCE ZONE 6028-W
TUPELO CREEK DRAINAGE

CITY OF TULSA, OKLAHOMA
ENGINEERING SERVICES DEPARTMENT

PLANS AND ESTIMATES PREPARED BY:
Meshek & Associates, L.L.C.
1437 S. Boulder Avenue, Suite 1550 Tulsa, OK 74119 (918)392-5620

REVISION	BY	DATE

PLAN SCALE	DRAWN	SCB	08/20
N/A	DESIGNED	BWF	08/20
	SURVEY	AB	08/18
PROFILE SCALE	PROJ. MGR.		
HORIZONTAL: 1" = 5'	LEAD ENGR.		
	FIELD MGR.		
VERTICAL: 1" = 5'	RECOMMENDED DESIGN MANAGER		

APPROVED:

CITY ENGINEER

FILE: DRAWING: DATE:

ATLAS PAGE NO. 235

SHEET 123 OF 161 SHEETS

PRINT DATE: 08/07/2020 M:\City_of_Tulsa\18TUL02_MZ6028_Tupelo_Creek_Drainage\Design\Drawings\18TUL02_X_SECTIONS_E_16TH_ST.dwg

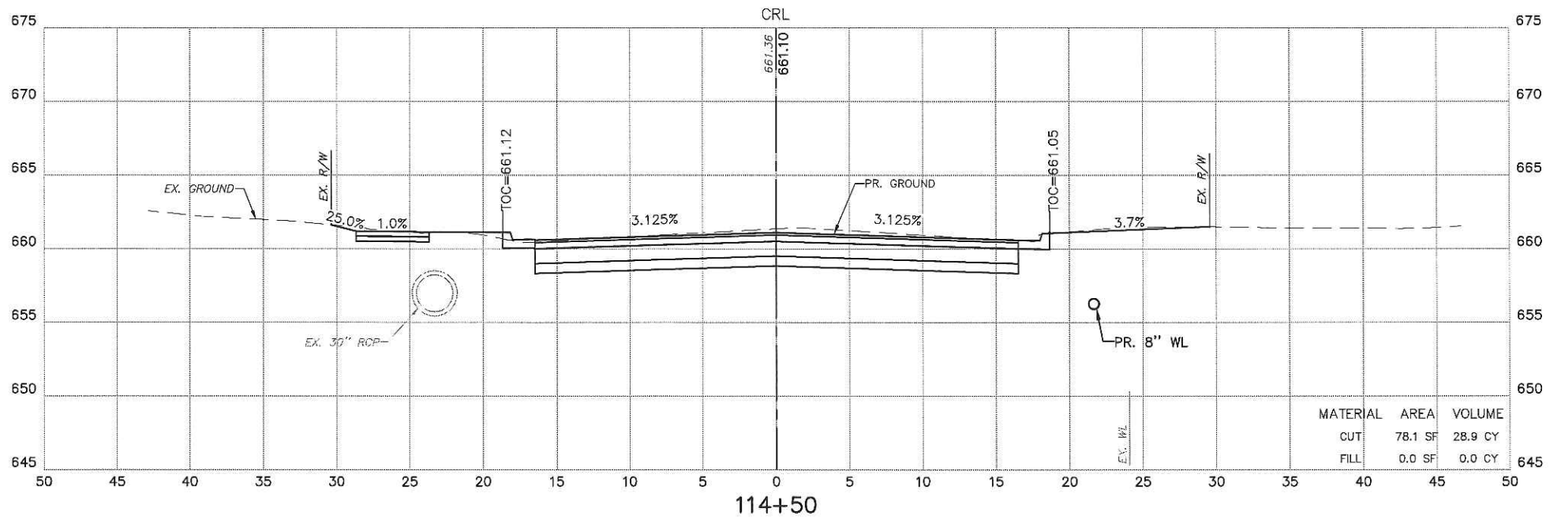

114+50

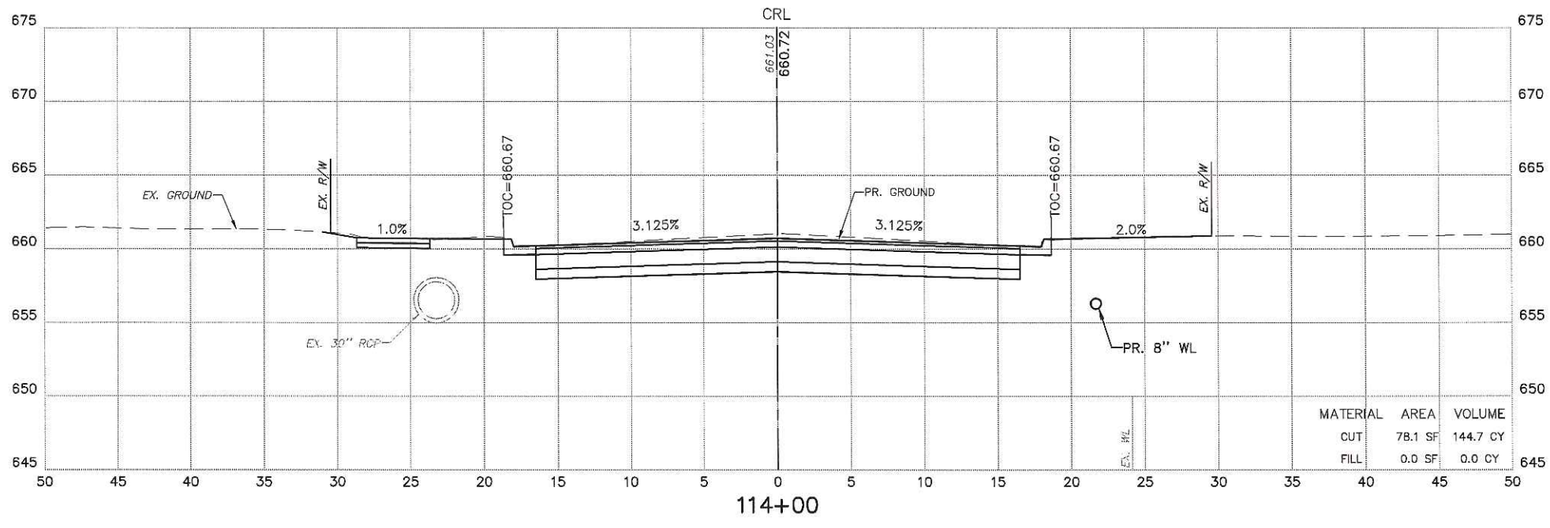

114+00

CROSS SECTIONS

PROJECT #144628-W, TMUA-W 18-16

MAINTENANCE ZONE 6028-W
TUPELO CREEK DRAINAGE

CITY OF TULSA, OKLAHOMA
ENGINEERING SERVICES DEPARTMENT

PLANS AND ESTIMATES PREPARED BY:
Meshek & Associates, L.L.C.
1437 S. Boulder Avenue, Suite 1550 Tulsa, OK 74119 (918)392-5620

REVISION	BY	DATE

PLAN SCALE	DRAWN	SCB	08/20	APPROVED:
N/A	DESIGNED	BWF	08/20	
	SURVEY	AB	08/18	
PROFILE SCALE	PROJ. MGR.			
HORIZONTAL: 1" = 5'	LEAD ENGR.			
	FIELD MGR.			
VERTICAL: 1" = 5'	RECOMMENDED			
	DESIGN MANAGER			CITY ENGINEER
FILE:	DRAWING:			DATE:
ATLAS PAGE NO. 235				SHEET 124 OF 161 SHEETS

PRINT DATE: 08/07/2020 M:\City_of_Tulsa\18TUL02_MZ6028_Tupelo_Creek_Drainage\Design\Drawings\18TUL02_X_SECTIONS_E_16TH_ST.dwg

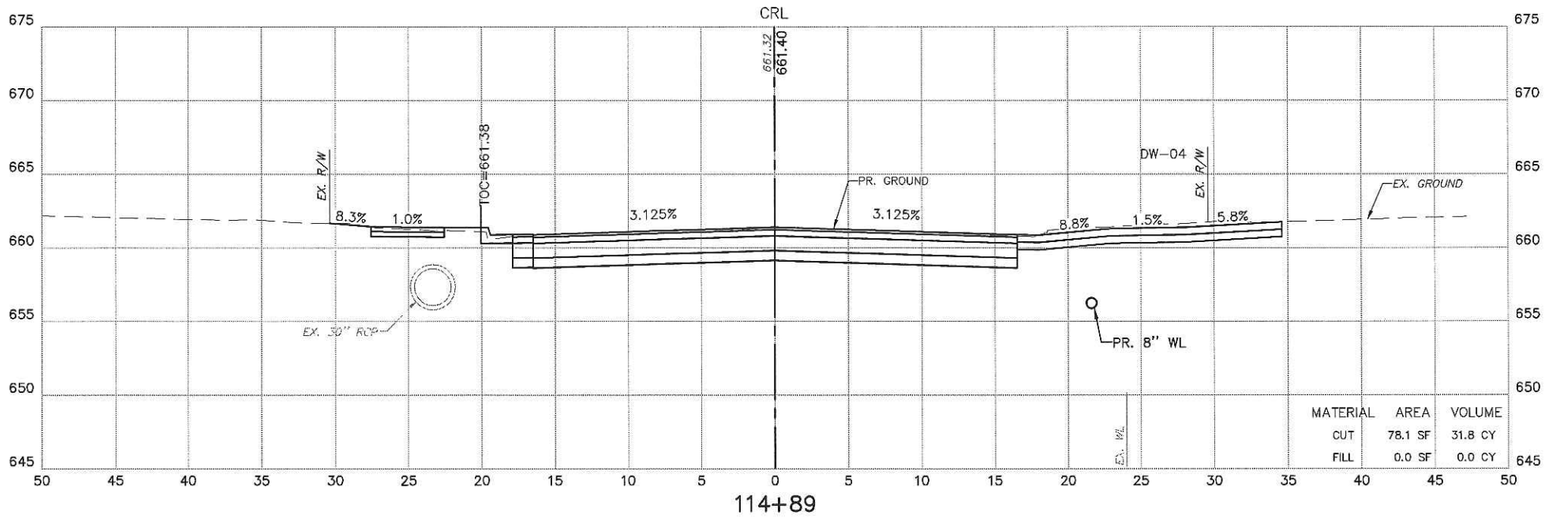

114+89

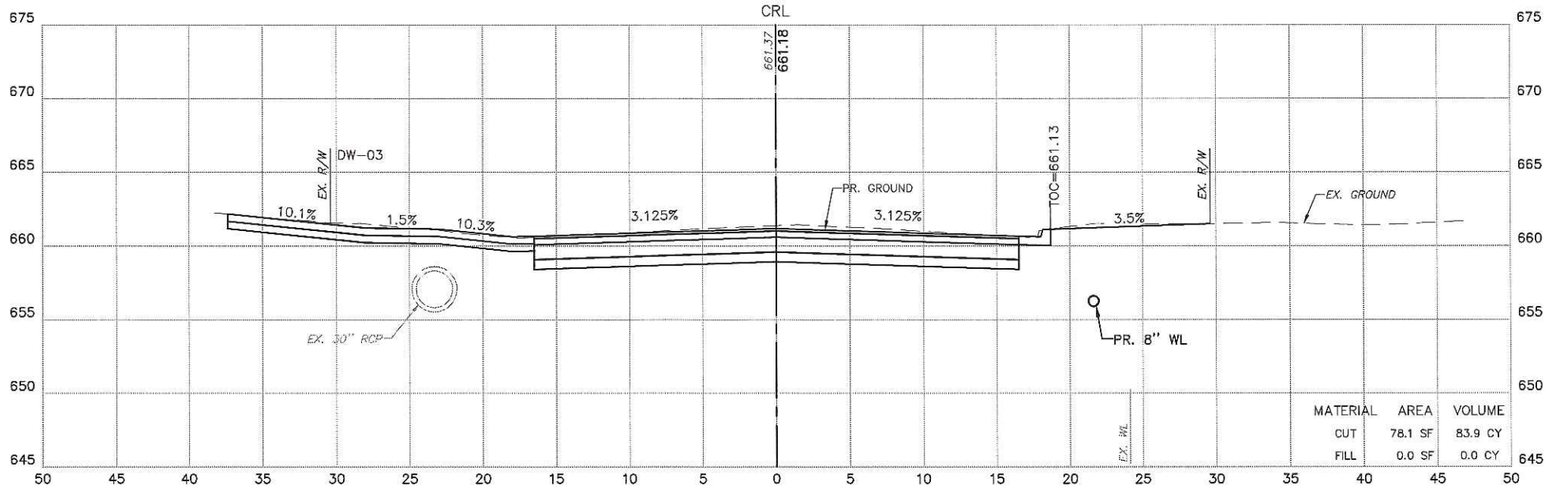

114+60

CROSS SECTIONS

PROJECT #144628-W, TMUA-W 18-16

MAINTENANCE ZONE 6028-W
TUPELO CREEK DRAINAGE

CITY OF TULSA, OKLAHOMA
ENGINEERING SERVICES DEPARTMENT

PLANS AND ESTIMATES PREPARED BY:
Meshek & Associates, L.L.C.
1437 S. Boulder Avenue, Suite 1550 Tulsa, OK 74119 (918)392-5620

REVISION	BY	DATE

PLAN SCALE	DRAWN	SCB	05/20	APPROVED:
N/A	DESIGNED	BWF	05/20	
	SURVEY	AB	05/18	
PROFILE SCALE	PROJ. MGR.			
HORIZONTAL: 1" = 5'	LEAD ENGR.			
	FIELD MGR.			
VERTICAL: 1" = 5'	RECOMMENDED			
	DESIGN MANAGER			CITY ENGINEER
FILE:	DRAWING:			DATE:
ATLAS PAGE NO. 235				SHEET 125 OF 161 SHEETS

PRINT DATE: 08/07/2020 M:\City_of_Tulsa\18TUL02_WZ6028_Tupelo_Creek_Drainage\Design\Drawings\18TUL02_X_SECTIONS_E_16TH_ST.dwg

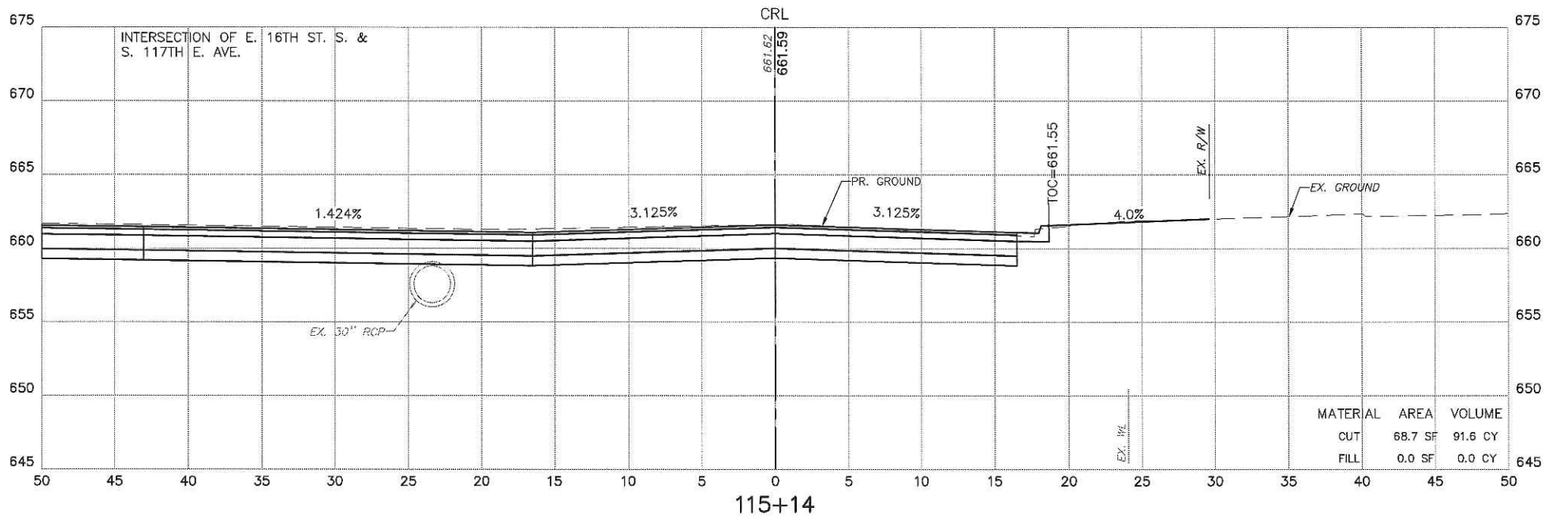

115+14

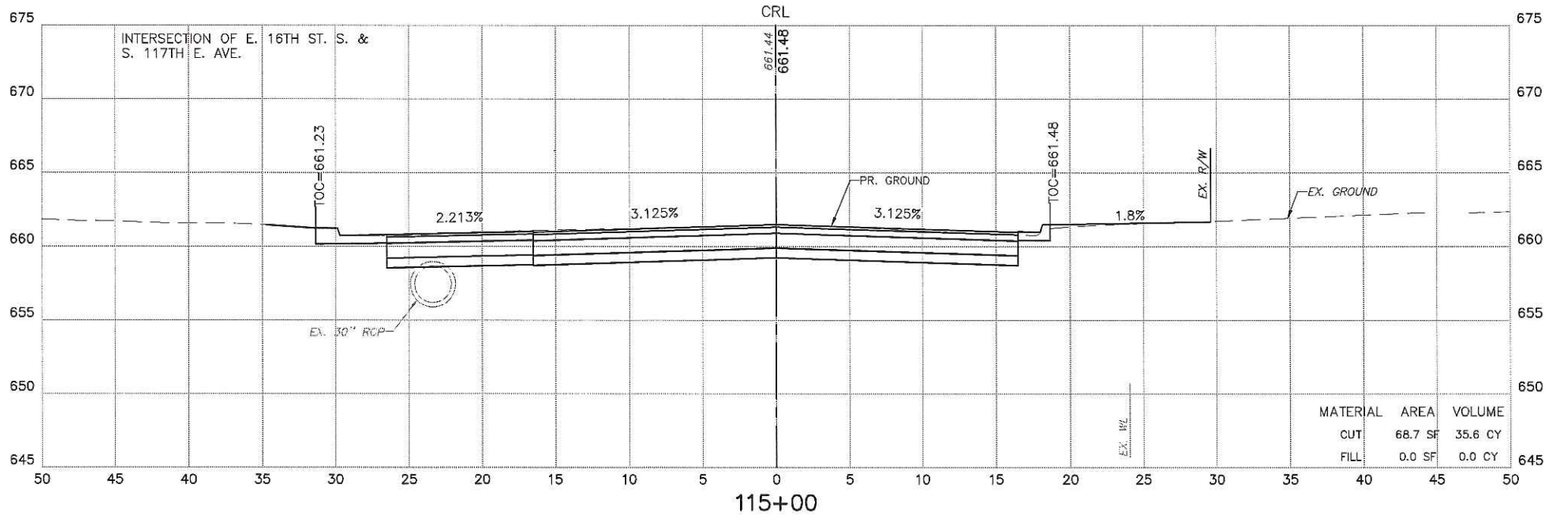

115+00

CROSS SECTIONS

PROJECT #144628-W, TMUA-W 18-16

MAINTENANCE ZONE 6028-W
TUPELO CREEK DRAINAGE

CITY OF TULSA, OKLAHOMA
ENGINEERING SERVICES DEPARTMENT

PLANS AND ESTIMATES PREPARED BY:
Meshek & Associates, L.L.C.
1437 S. Boulder Avenue, Suite 1550 Tulsa, OK 74119 (918)392-5620

REVISION	BY	DATE

PLAN SCALE	DRAWN	SCB	08/20	APPROVED:
N/A	DESIGNED	BWF	08/20	
	SURVEY	AB	08/18	
PROFILE SCALE	PROJ. MGR.			
HORIZONTAL: 1" = 5'	LEAD ENGR.			
	FIELD MGR.			
VERTICAL: 1" = 5'	RECOMMENDED			
	DESIGN MANAGER			CITY ENGINEER
FILE:	DRAWING:			DATE:
ATLAS PAGE NO. 235				SHEET 126 OF 161 SHEETS

PRINT DATE: 08/07/2020 M:\City_of_Tulsa\18TUL02_MZ6028_Tupelo_Creek_Drainage\Design\Drawings\18TUL02_X_SECTIONS_E_16TH_ST.dwg

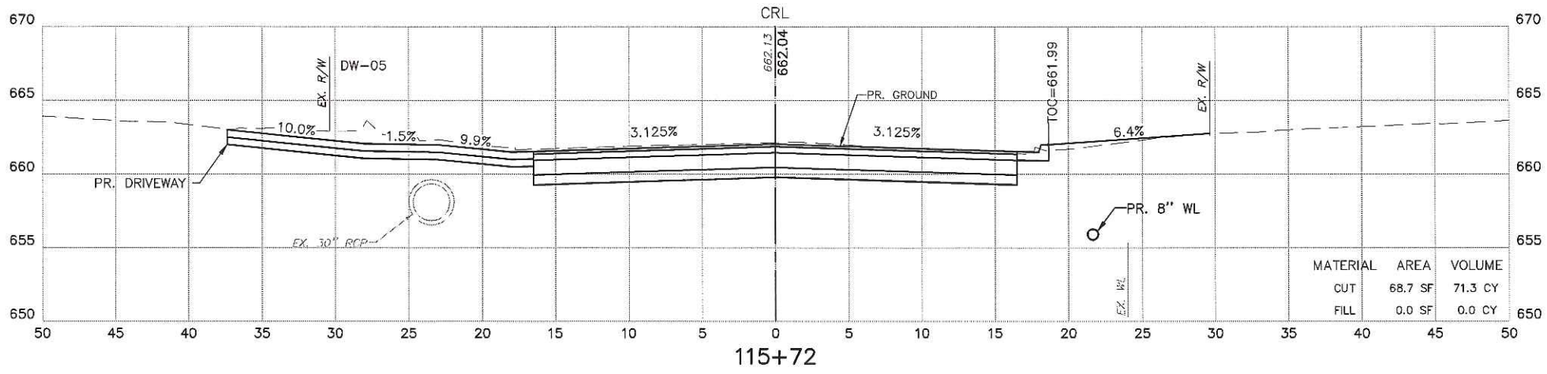

115+72

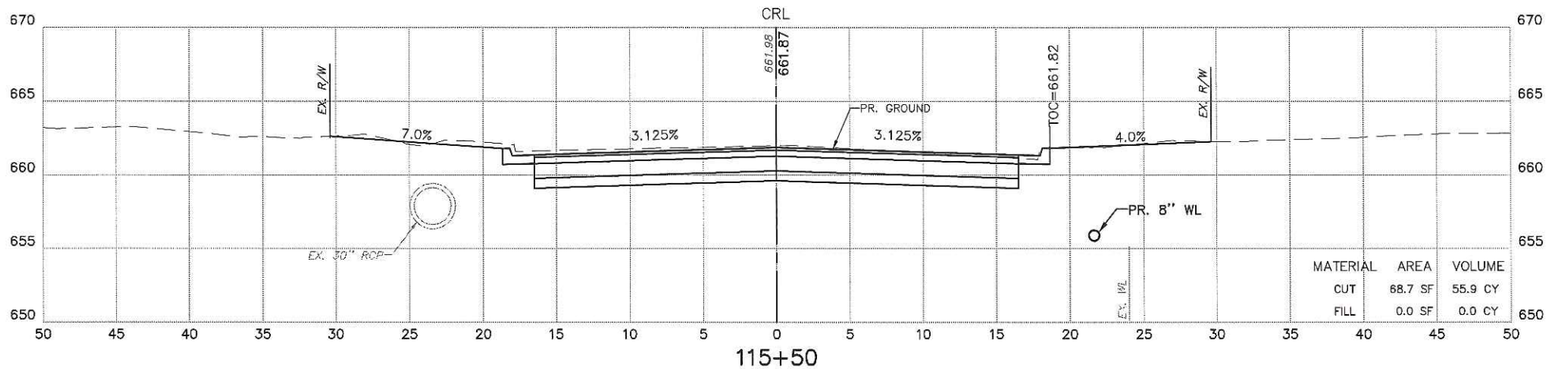

115+50

CROSS SECTIONS

PROJECT #144628-W, TMUA-W 18-16

MAINTENANCE ZONE 6028-W
TUPELO CREEK DRAINAGE

CITY OF TULSA, OKLAHOMA
ENGINEERING SERVICES DEPARTMENT

PLANS AND ESTIMATES PREPARED BY:
Meshek & Associates, L.L.C.
1437 S. Boulder Avenue, Suite 1550 Tulsa, OK 74119 (918)392-5620

REVISION	BY	DATE

PLAN SCALE: N/A
PROFILE SCALE: HORIZONTAL: 1" = 5' VERTICAL: 1" = 5'

DRAWN	SCB	08/20	APPROVED:
DESIGNED	BWF	08/20	
SURVEY	AB	08/18	
PROJ. MGR.			
LEAD ENGR.			
FIELD MGR.			
RECOMMENDED DESIGN MANAGER			CITY ENGINEER
FILE:	DRAWING:		DATE:
ATLAS PAGE NO. 235			SHEET 127 OF 161 SHEETS

PRINT DATE: 08/07/2020 M:\City_of_Tulsa\18TUL02_MZ6028_Tupelo_Creek_Drainage\Design\Drawings\18TUL02_X_SECTIONS_E_16TH_ST.dwg

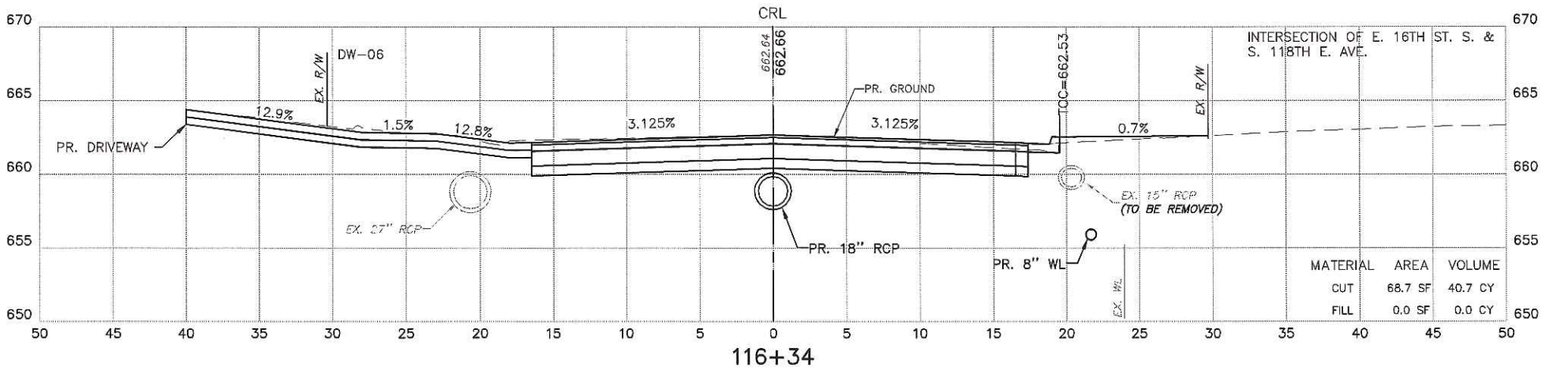

116+34

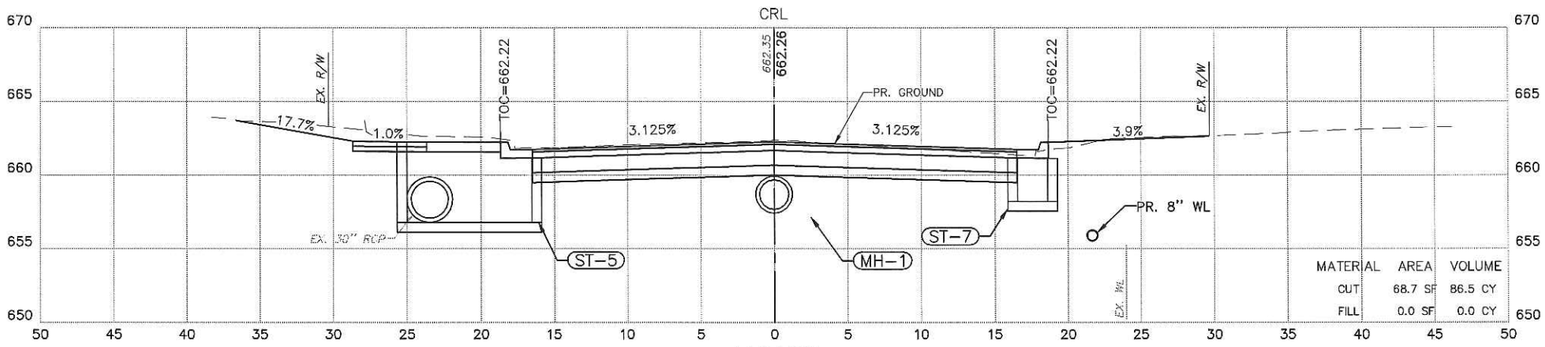

116+00

CROSS SECTIONS

PROJECT #144628-W, TMUA-W 18-16

MAINTENANCE ZONE 6028-W
TUPELO CREEK DRAINAGE

CITY OF TULSA, OKLAHOMA
ENGINEERING SERVICES DEPARTMENT

PLANS AND ESTIMATES PREPARED BY:
Meshek & Associates, L.L.C.
1437 S. Boulder Avenue, Suite 1550 Tulsa, OK 74119 (918)392-5620

REVISION	BY	DATE

PLAN SCALE	DRAWN	SCB	08/20
N/A	DESIGNED	BWF	08/20
	SURVEY	AB	08/18
PROFILE SCALE	PROJ. MGR.		
HORIZONTAL: 1" = 5'	LEAD ENGR.		
	FIELD MGR.		
VERTICAL: 1" = 5'	RECOMMENDED		
	DESIGN MANAGER		
FILE:	DRAWING:		
ATLAS PAGE NO. 235			

APPROVED:

CITY ENGINEER

DATE:

SHEET 128 OF 161 SHEETS

PRINT DATE: 08/07/2020 M:\City_of_Tulsa\18TUL02_MZ6028_Tupelo_Creek_Drainage\Design\Drawings\18TUL02_X_SECTIONS_E_16TH_ST.dwg

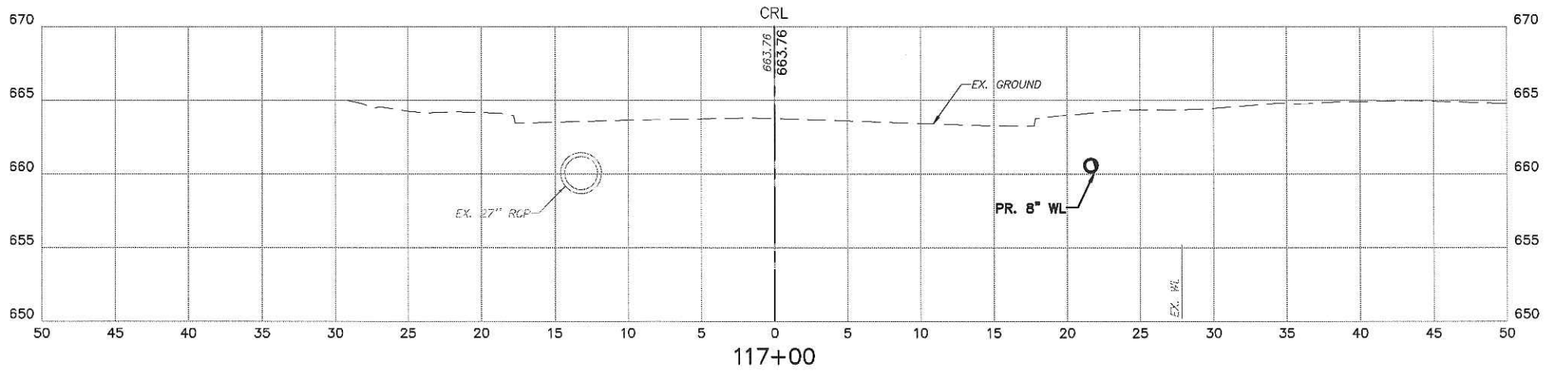

117+00

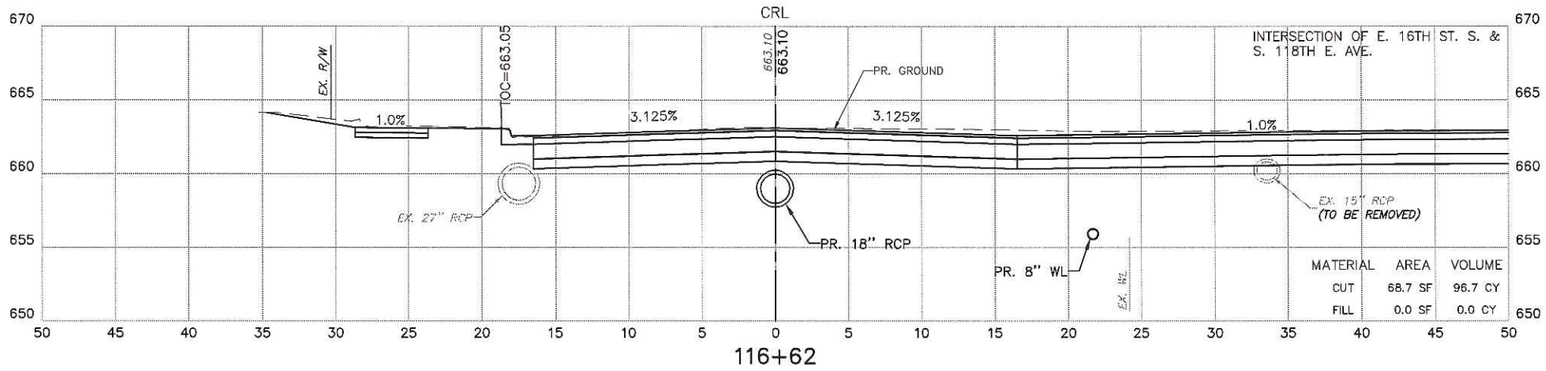

116+62

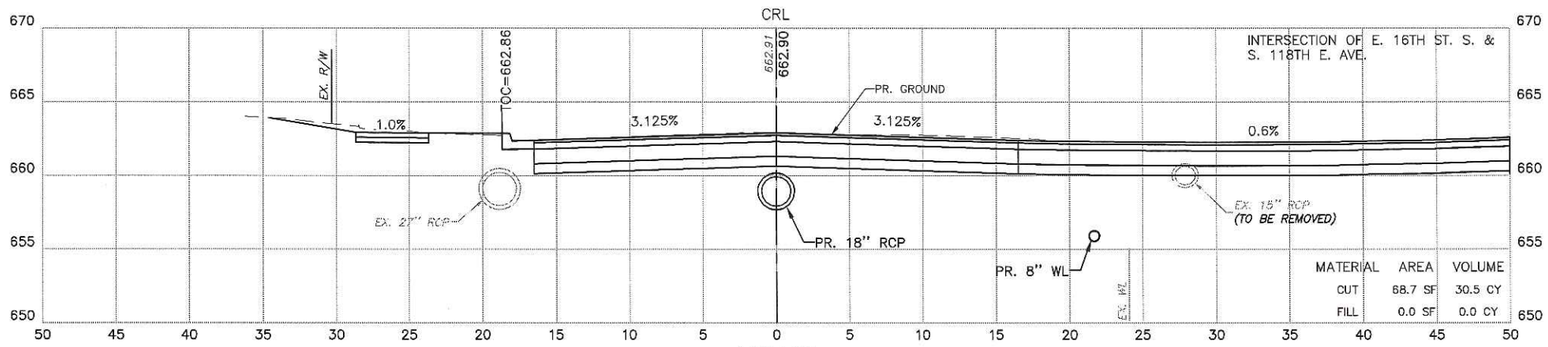

116+50

CROSS SECTIONS

PROJECT #144628-W, TMUA-W 18-16

MAINTENANCE ZONE 6028-W
TUPELO CREEK DRAINAGE

CITY OF TULSA, OKLAHOMA
ENGINEERING SERVICES DEPARTMENT

PLANS AND ESTIMATES PREPARED BY:
Meshek & Associates, L.L.C.
1437 S. Boulder Avenue, Suite 1550 Tulsa, OK 74119 (918)392-5620

REVISION	BY	DATE

PLAN SCALE	DRAWN	SCB	08/20
N/A	DESIGNED	BWF	08/20
	SURVEY	AB	08/18
PROFILE SCALE	PROJ. MGR.		
HORIZONTAL: 1" = 5'	LEAD ENGR.		
	FIELD MGR.		
VERTICAL: 1" = 5'	RECOMMENDED		
	DESIGN MANAGER		
FILE:	DRAWING:		
ATLAS PAGE NO. 235			

APPROVED:

CITY ENGINEER

DATE:

SHEET 129 OF 161 SHEETS

PRINT DATE: 08/07/2020 M:\City_of_Tulsa\18TUL02_MZ6028_Tupelo_Creek_Drainage\Design\Drawings\18TUL02_X_SECTIONS_E_16TH_ST.dwg

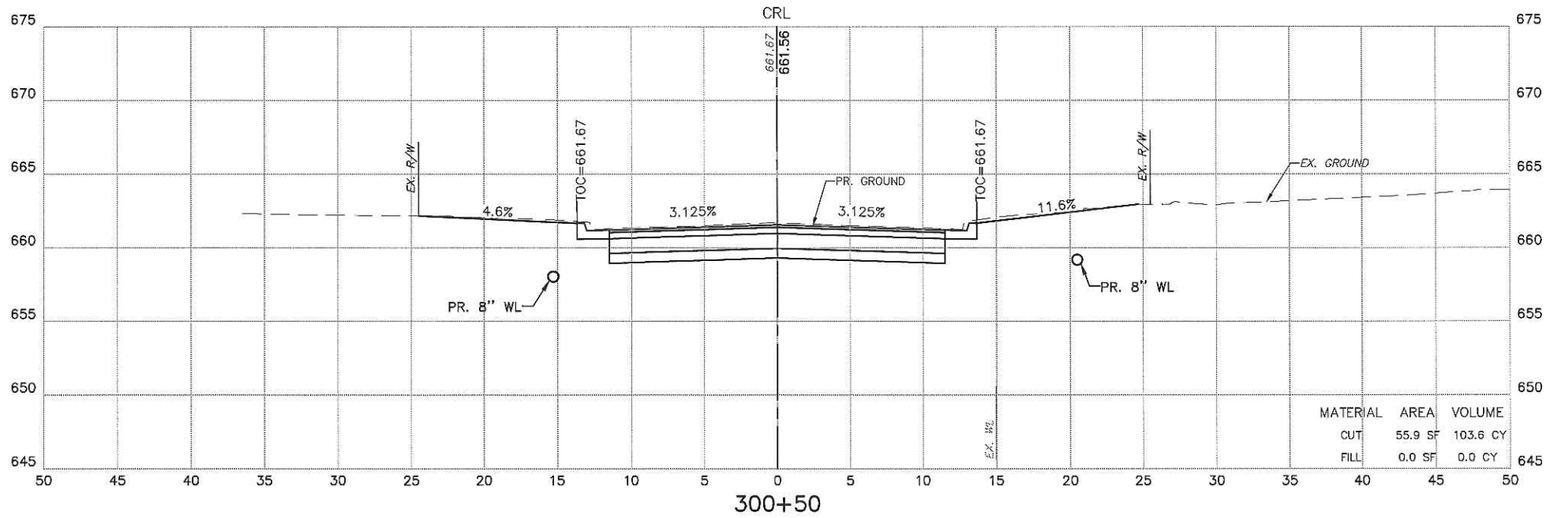

300+50

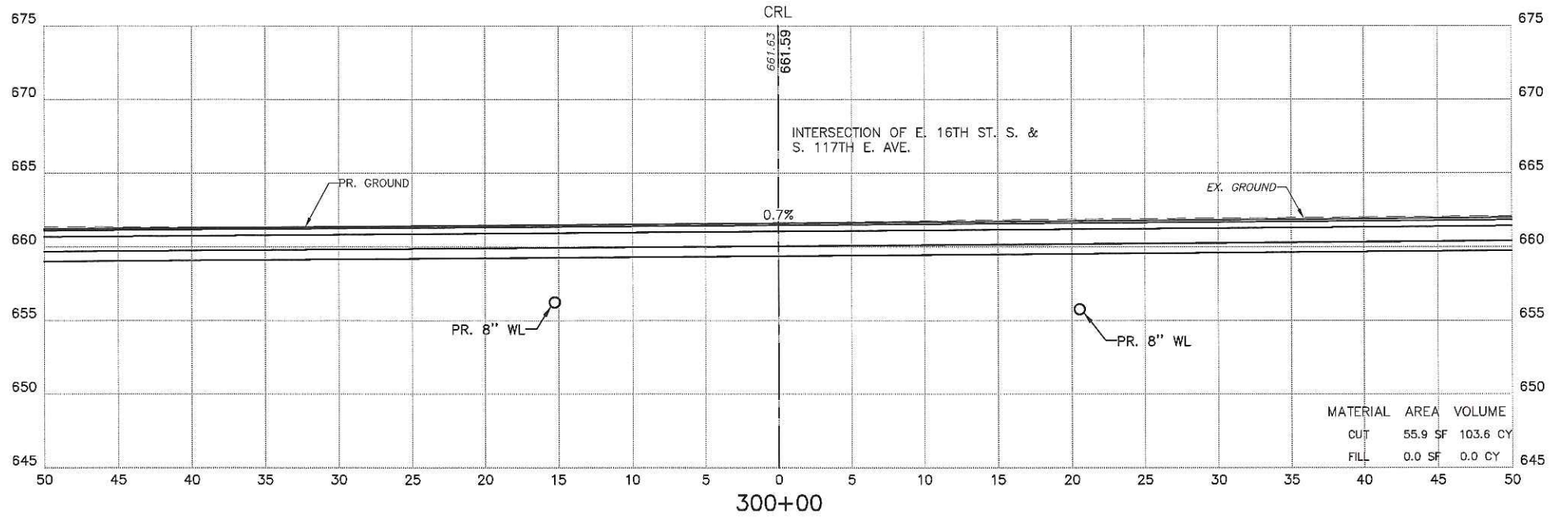

300+00

CROSS SECTIONS

PROJECT #144628-W, TMUA-W 18-16

MAINTENANCE ZONE 6028-W
TUPELO CREEK DRAINAGE

CITY OF TULSA, OKLAHOMA
ENGINEERING SERVICES DEPARTMENT

PLANS AND ESTIMATES PREPARED BY:
Meshek & Associates, L.L.C.
1437 S. Boulder Avenue, Suite 1550 Tulsa, OK 74119 (918)392-5620

REVISION	BY	DATE

PLAN SCALE	DRAWN	SCB	08/20
N/A	DESIGNED	BWF	08/20
	SURVEY	AB	08/18
PROFILE SCALE	PROJ. MGR.		
HORIZONTAL: 1" = 5'	LEAD ENGR.		
	FIELD MGR.		
VERTICAL: 1" = 5'	RECOMMENDED		
	DESIGN MANAGER		
FILE:	DRAWING:		
ATLAS PAGE NO. 235			

APPROVED:

CITY ENGINEER

DATE:

SHEET 130 OF 161 SHEETS

PRINT DATE: 08/07/2020 M:\City_of_Tulsa\18TUL02_MZ6028_Tupelo_Creek_Drainage\Design\Drawings\18TUL02_X_SECTIONS_S_117TH_E_AVE_NORTH.dwg

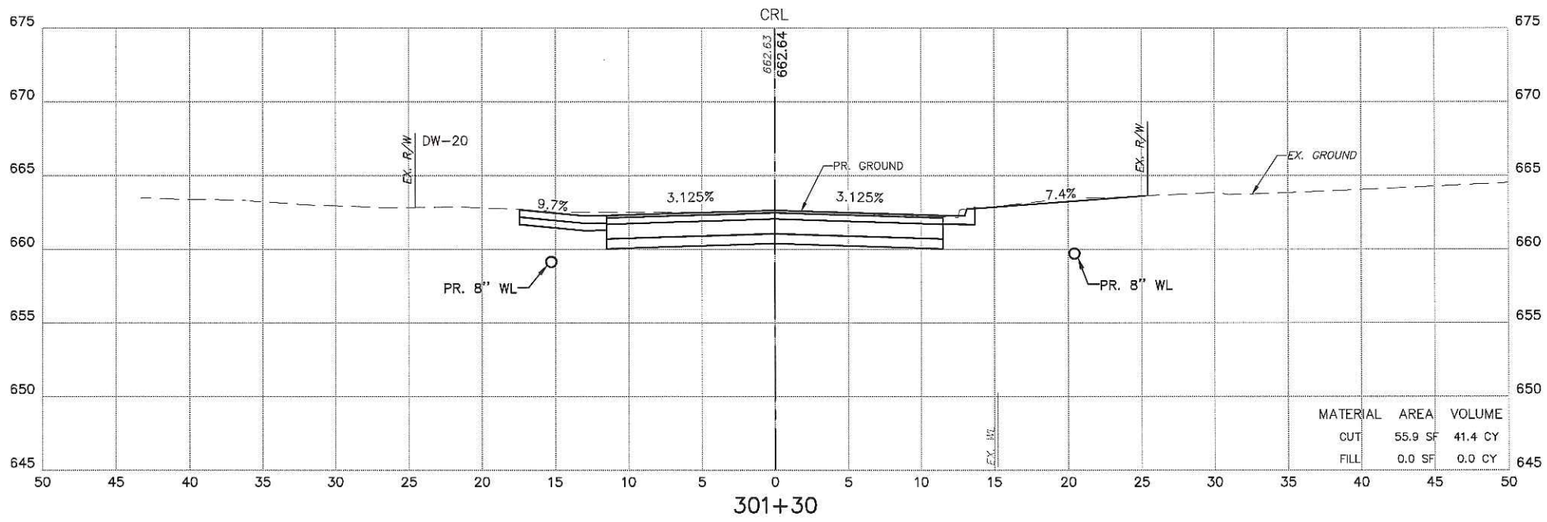

301+30

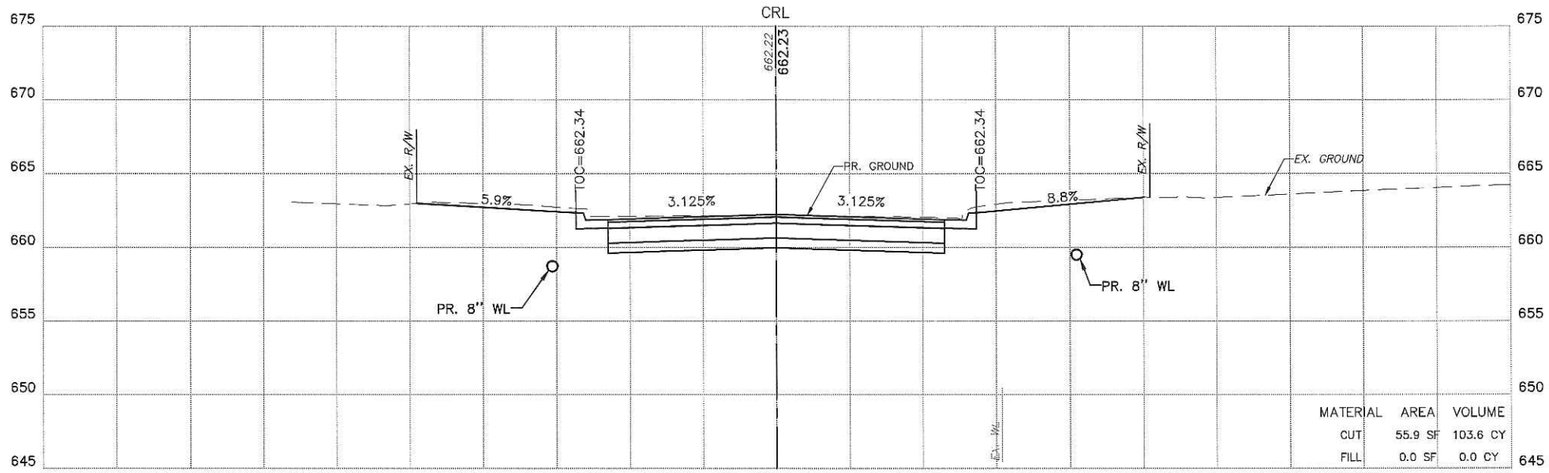

301+00

CROSS SECTIONS

PROJECT #144628-W, TMUA-W 18-16

MAINTENANCE ZONE 6028-W
TUPELO CREEK DRAINAGE

CITY OF TULSA, OKLAHOMA
ENGINEERING SERVICES DEPARTMENT

PLANS AND ESTIMATES PREPARED BY:
Meshek & Associates, L.L.C.
1437 S. Boulder Avenue, Suite 1550 Tulsa, OK 74119 (918)392-5620

REVISION	BY	DATE

PLAN SCALE	DRAWN	SCB	08/20	APPROVED:
N/A	DESIGNED	BWF	08/20	
	SURVEY	AB	08/18	
PROFILE SCALE	PROJ. MGR.			
HORIZONTAL: 1" = 5'	LEAD ENGR.			
	FIELD MGR.			
VERTICAL: 1" = 5'	RECOMMENDED DESIGN MANAGER			CITY ENGINEER
FILE:	DRAWING:			DATE:
ATLAS PAGE NO. 235				SHEET 131 OF 161 SHEETS

PRINT DATE: 08/07/2020 M:\City_of_Tulsa\18TUL02_MZ6028_Tupelo_Creek_Drainage\Design\Drawings\18TUL02_X_SECTIONS_S_117TH_E_AVE_NORTH.dwg

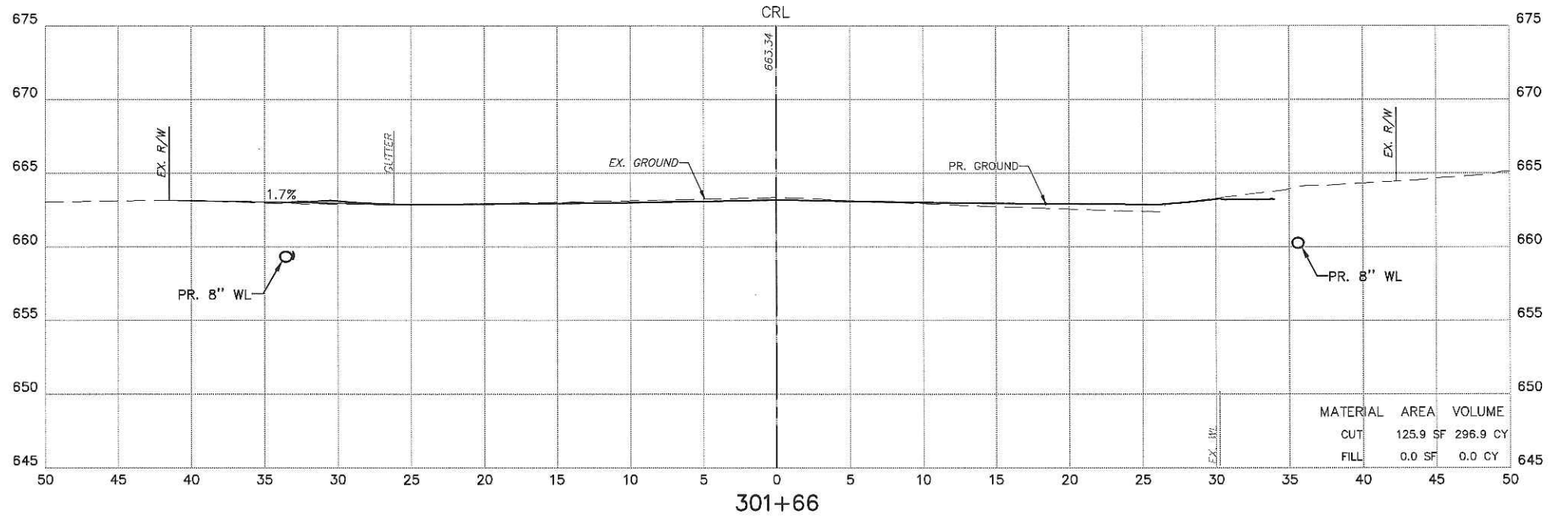

301+66

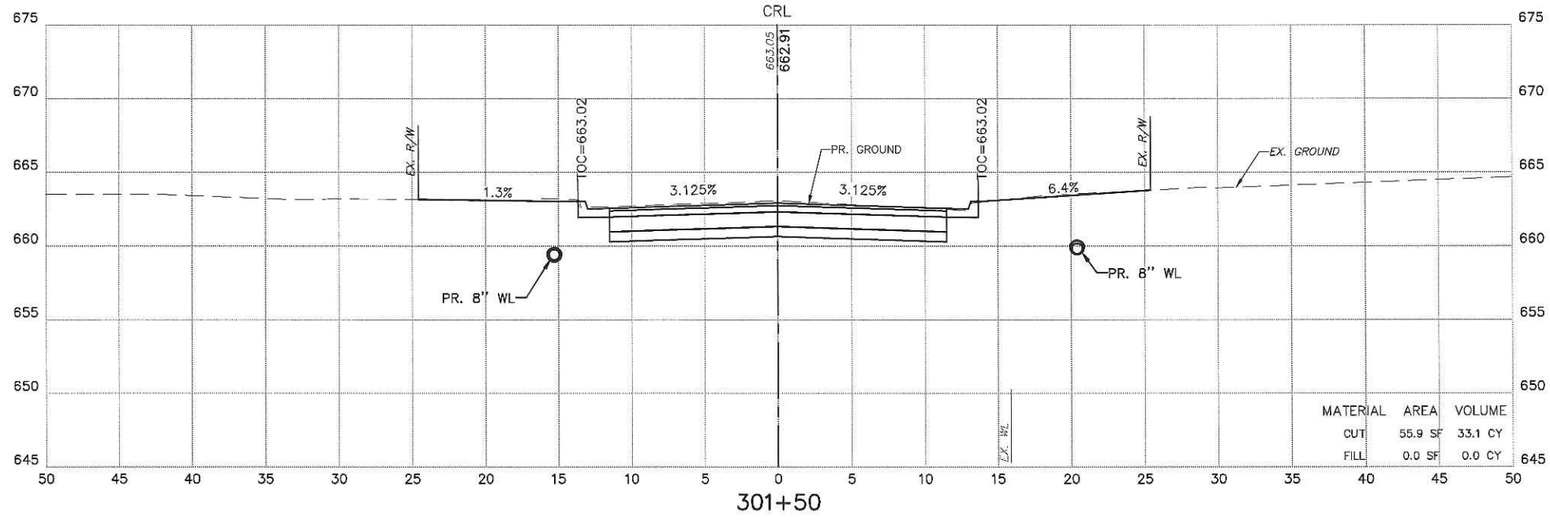

301+50

CROSS SECTIONS

PROJECT #144628-W, TMUA-W 18-16

MAINTENANCE ZONE 6028-W
TUPELO CREEK DRAINAGE

CITY OF TULSA, OKLAHOMA
ENGINEERING SERVICES DEPARTMENT

PLANS AND ESTIMATES PREPARED BY:
Meshek & Associates, L.L.C.
1437 S. Boulder Avenue, Suite 1550 Tulsa, OK 74119 (918)392-5620

REVISION	BY	DATE

PLAN SCALE	DRAWN	SCB	08/20
N/A	DESIGNED	BWF	08/20
	SURVEY	AB	08/18
PROFILE SCALE	PROJ. MGR.		
HORIZONTAL: 1" = 5'	LEAD ENGR.		
	FIELD MGR.		
VERTICAL: 1" = 5'	RECOMMENDED		
	DESIGN MANAGER		
FILE:	DRAWING:		
ATLAS PAGE NO. 235			

APPROVED:

CITY ENGINEER

DATE:

SHEET 132 OF 161 SHEETS

PRINT DATE: 08/07/2020 M:\City_of_Tulsa\18TUL02_MZ6028_Tupelo_Creek_Drainage\Design\Drawings\18TUL02_X_SECTIONS_S_117TH_E_AVE_NORTH.dwg

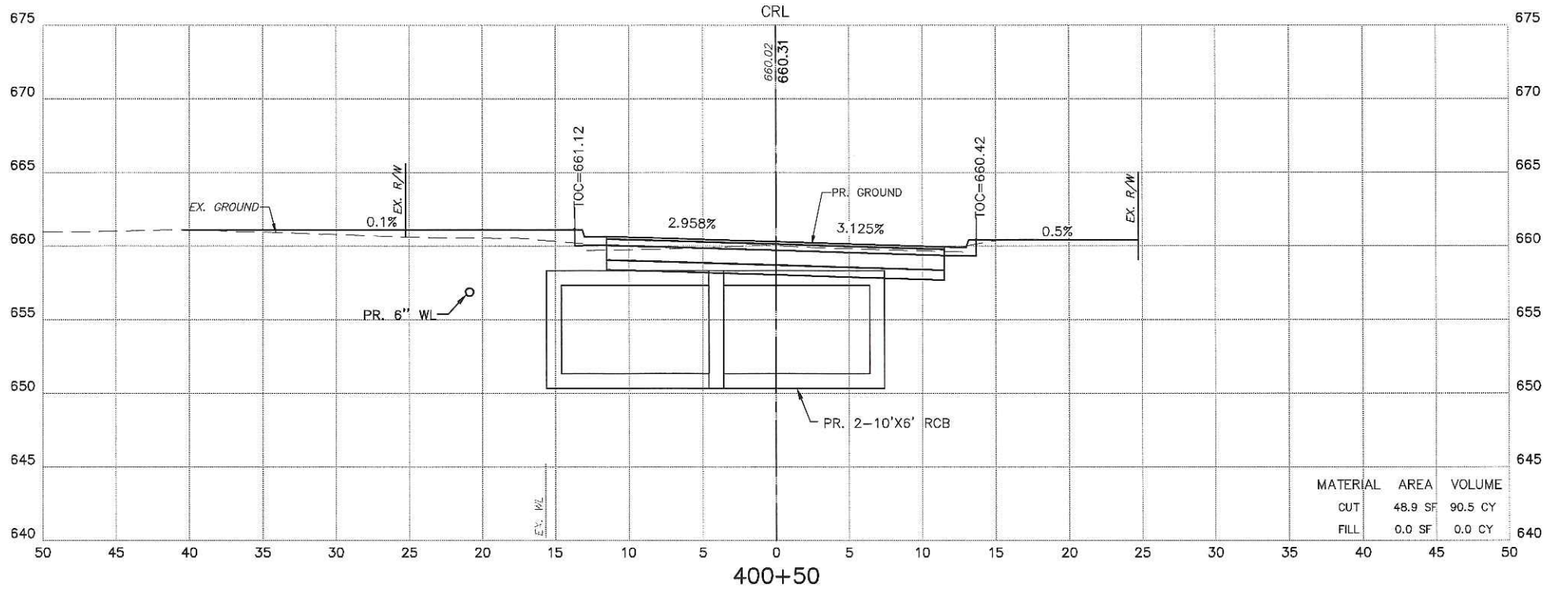

400+50

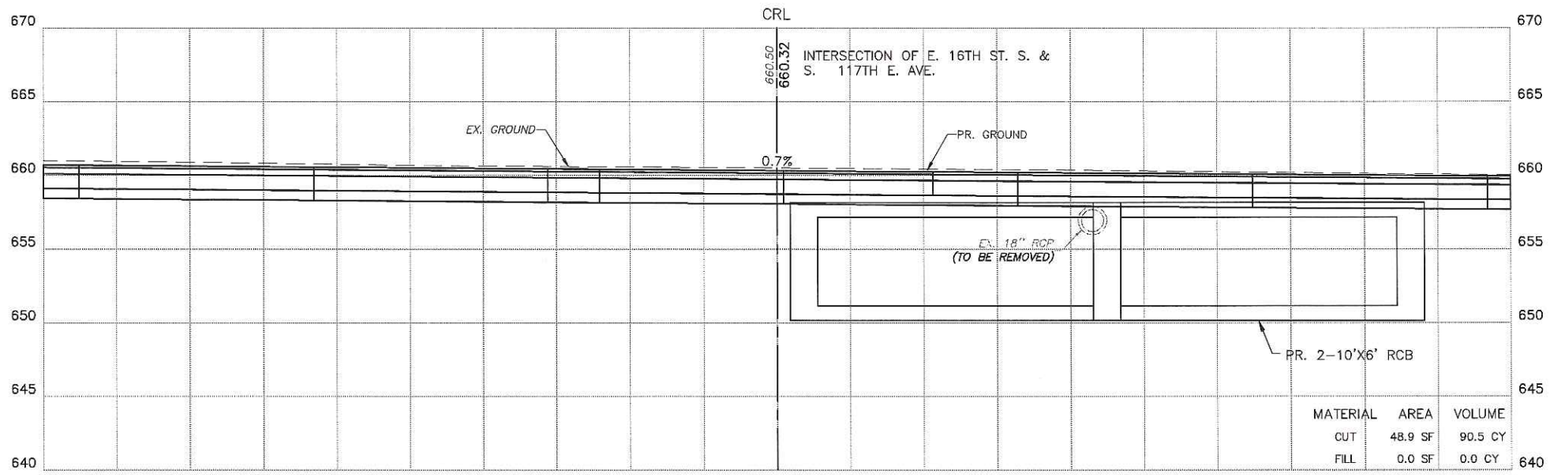

400+00

CROSS SECTIONS

PROJECT #144628-W, TMUA-W 18-16

MAINTENANCE ZONE 6028-W
TUPELO CREEK DRAINAGE

CITY OF TULSA, OKLAHOMA
ENGINEERING SERVICES DEPARTMENT

PLANS AND ESTIMATES PREPARED BY:
Meshek & Associates, L.L.C.
1437 S. Boulder Avenue, Suite 1550 Tulsa, OK 74119 (918)392-5620

REVISION	BY	DATE

PLAN SCALE	DRAWN	SCB	08/20
N/A	DESIGNED	BWF	08/20
	SURVEY	AB	08/18
PROFILE SCALE	PROJ. MGR.		
HORIZONTAL: 1" = 5'	LEAD ENGR.		
	FIELD MGR.		
VERTICAL: 1" = 5'	RECOMMENDED DESIGN MANAGER		
FILE:	DRAWING:		
ATLAS PAGE NO. 235			

APPROVED:

CITY ENGINEER

DATE:

SHEET 133 OF 161 SHEETS

PRINT DATE: 08/07/2020 M:\City_of_Tulsa\16TUL02_MZ6028_Tupelo_Creek_Drainage\Design\Drawings\16TUL02_X_SECTIONS_E_17TH_PL.dwg

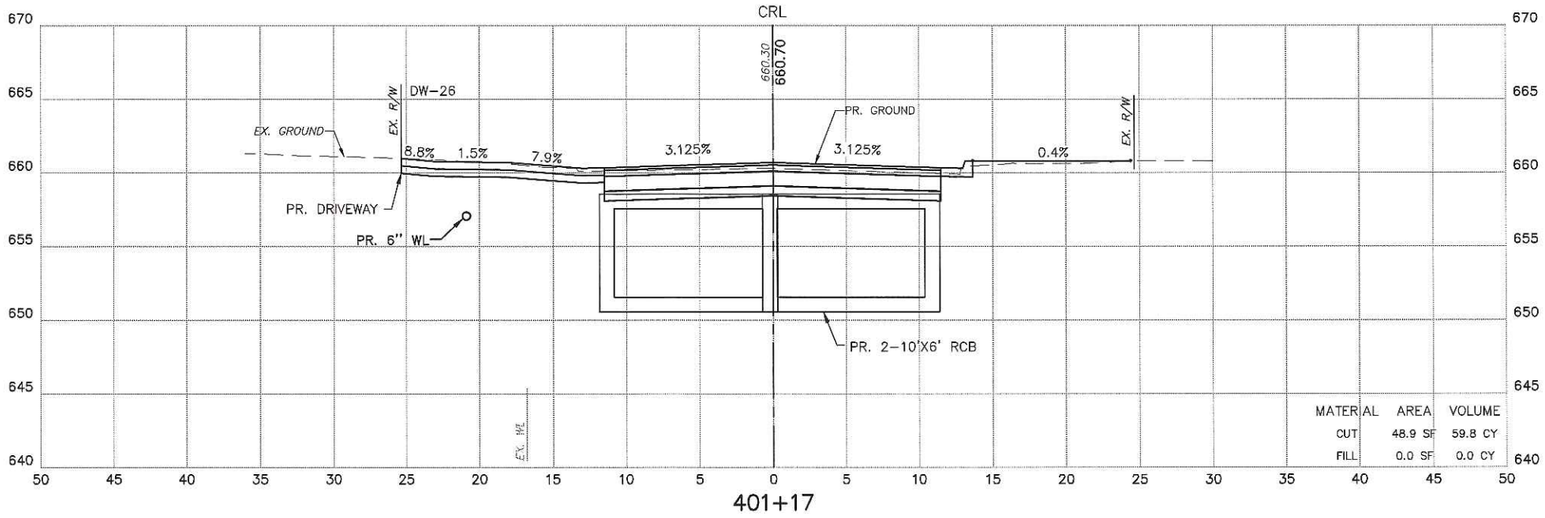

401+17

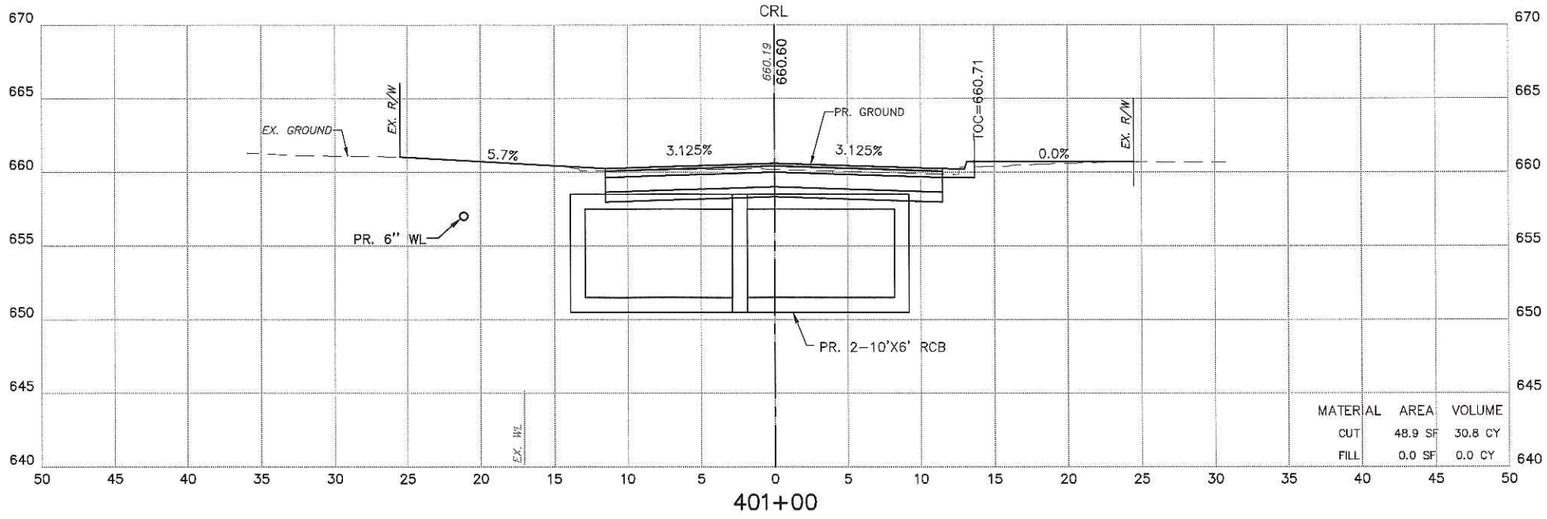

401+00

CROSS SECTIONS

PROJECT #144628-W, TMUA-W 18-16

MAINTENANCE ZONE 6028-W
TUPELO CREEK DRAINAGE

CITY OF TULSA, OKLAHOMA
ENGINEERING SERVICES DEPARTMENT

PLANS AND ESTIMATES PREPARED BY:
Meshek & Associates, L.L.C.
1437 S. Boulder Avenue, Suite 1550 Tulsa, OK 74119 (918)392-5620

REVISION	BY	DATE

PLAN SCALE	DRAWN	SCB	08/20	APPROVED:
N/A	DESIGNED	BWF	08/20	
	SURVEY	AB	08/18	
PROFILE SCALE	PROJ. MGR.			
HORIZONTAL: 1" = 5'	LEAD ENGR.			
	FIELD MGR.			
VERTICAL: 1" = 5'	RECOMMENDED DESIGN MANAGER			CITY ENGINEER
FILE:	DRAWING:			DATE:
ATLAS PAGE NO. 235				SHEET 134 OF 161 SHEETS

PRINT DATE: 08/07/2020 M:\City_of_Tulsa\18TUL02_WZ6028_Tupelo_Creek_Drainage\Design\Drawings\18TUL02_X_SECTIONS_E_17TH_PL.dwg

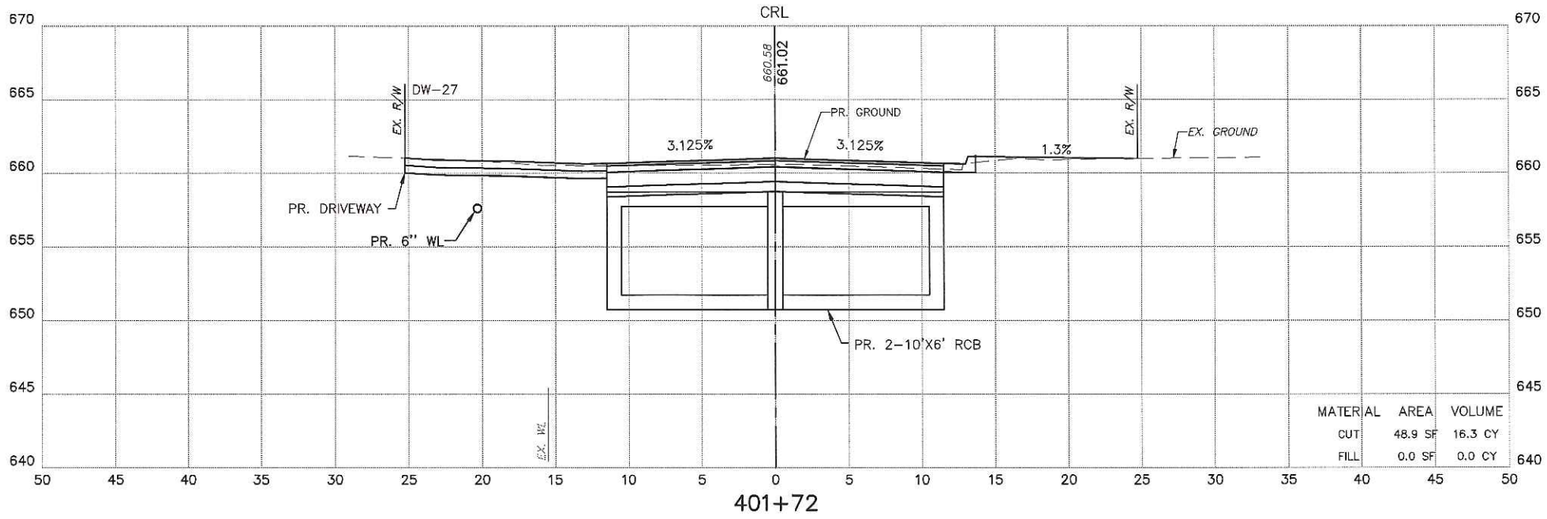

401+72

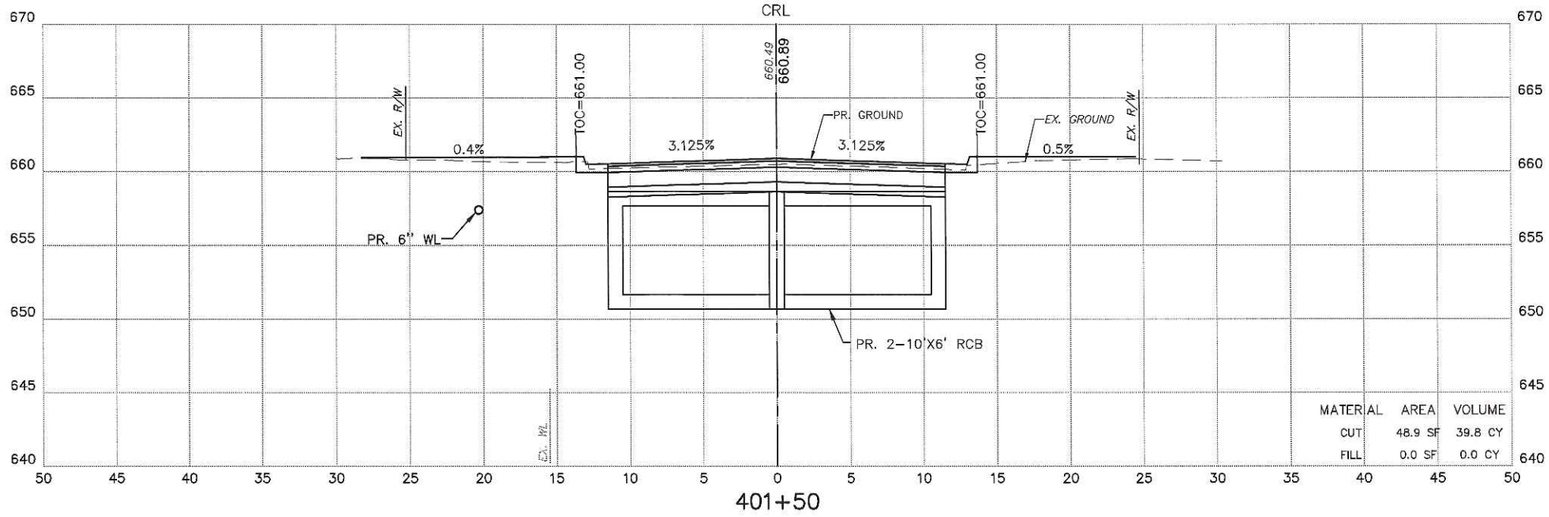

401+50

CROSS SECTIONS

PROJECT #144628-W, TMUA-W 18-16

MAINTENANCE ZONE 6028-W
TUPELO CREEK DRAINAGE

CITY OF TULSA, OKLAHOMA
ENGINEERING SERVICES DEPARTMENT

PLANS AND ESTIMATES PREPARED BY:
Meshek & Associates, L.L.C.
1437 S. Boulder Avenue, Suite 1550 Tulsa, OK 74119 (918)392-5620

REVISION	BY	DATE

PLAN SCALE	DRAWN	SCB	08/20	APPROVED:
N/A	DESIGNED	BWF	08/20	
	SURVEY	AB	08/18	
PROFILE SCALE	PROJ. MGR.			
HORIZONTAL: 1" = 5'	LEAD ENGR.			
	FIELD MGR.			
VERTICAL: 1" = 5'	RECOMMENDED			
	DESIGN MANAGER			CITY ENGINEER
FILE:	DRAWING:			DATE:
ATLAS PAGE NO. 235				SHEET 135 OF 161 SHEETS

PRINT DATE: 08/07/2020 M:\City_of_Tulsa\18TUL02_WZ6028_Tupelo_Creek_Drainage\Design\Drawings\18TUL02_X_SECTIONS_E_17TH_PL.dwg

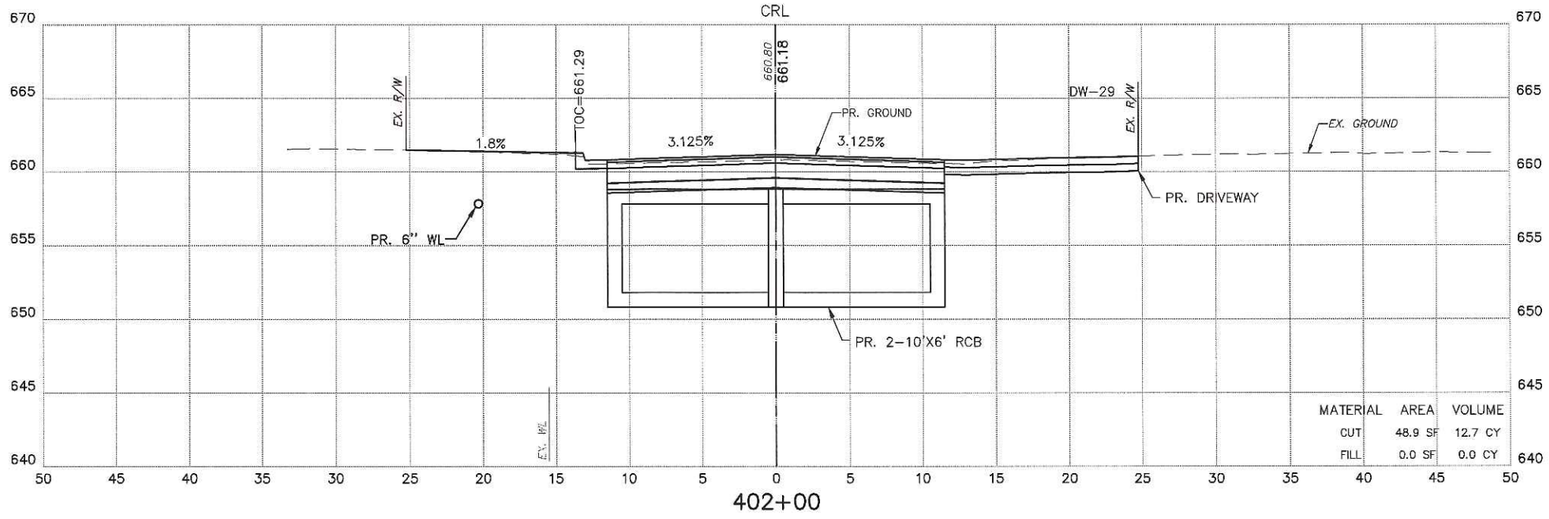

MATERIAL	AREA	VOLUME
CUT	48.9 SF	12.7 CY
FILL	0.0 SF	0.0 CY

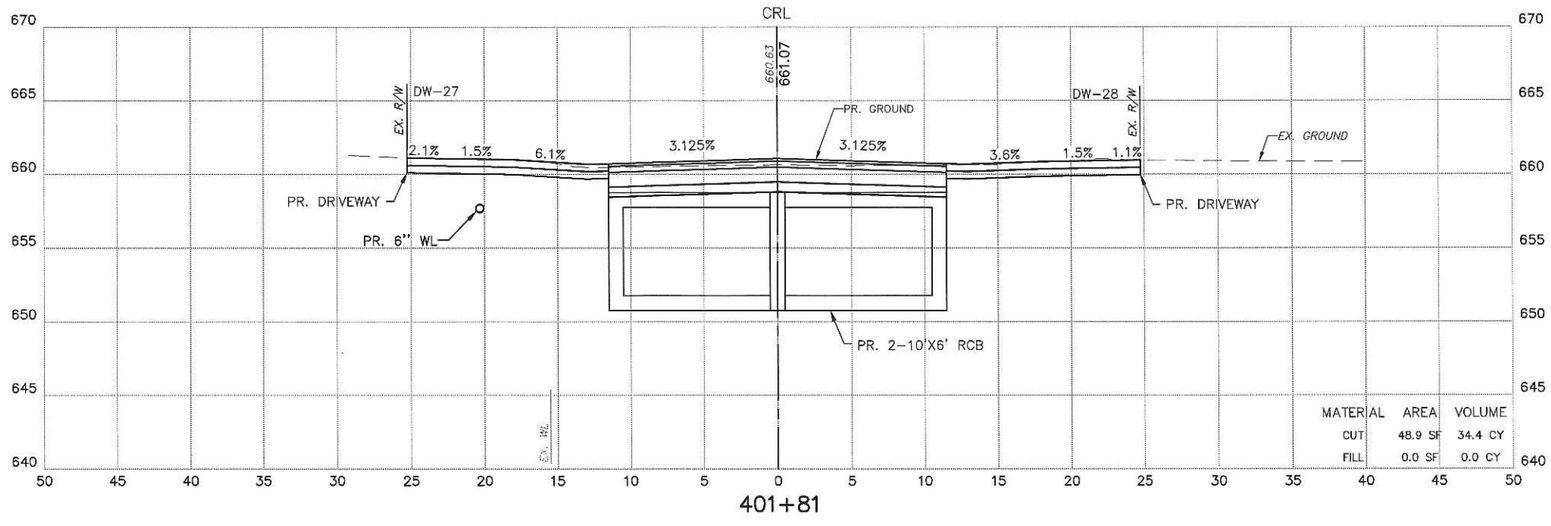

MATERIAL	AREA	VOLUME
CUT	48.9 SF	34.4 CY
FILL	0.0 SF	0.0 CY

CROSS SECTIONS

PROJECT #144628-W, TMUA-W 18-16

MAINTENANCE ZONE 6028-W
TUPELO CREEK DRAINAGE

CITY OF TULSA, OKLAHOMA
ENGINEERING SERVICES DEPARTMENT

PLANS AND ESTIMATES PREPARED BY:
Meshek & Associates, L.L.C.
1437 S. Boulder Avenue, Suite 1550 Tulsa, OK 74119 (918)392-5620

REVISION	BY	DATE

PLAN SCALE	DRAWN	SCB	08/20	APPROVED:
N/A	DESIGNED	BWF	08/20	
	SURVEY	AB	08/18	
PROFILE SCALE	PROJ. MGR.			
HORIZONTAL: 1" = 5'	LEAD ENGR.			
	FIELD MGR.			
VERTICAL: 1" = 5'	RECOMMENDED			
	DESIGN MANAGER			CITY ENGINEER
FILE:	DRAWING:			DATE:
ATLAS PAGE NO. 235				SHEET 136 OF 161 SHEETS

PRINT DATE: 08/07/2020 M:\City_of_Tulsa\18TUL02_MZ6028_Tupelo_Creek_Drainage\Design\Drawings\18TUL02_X_SECTIONS_E_17TH_PL.dwg

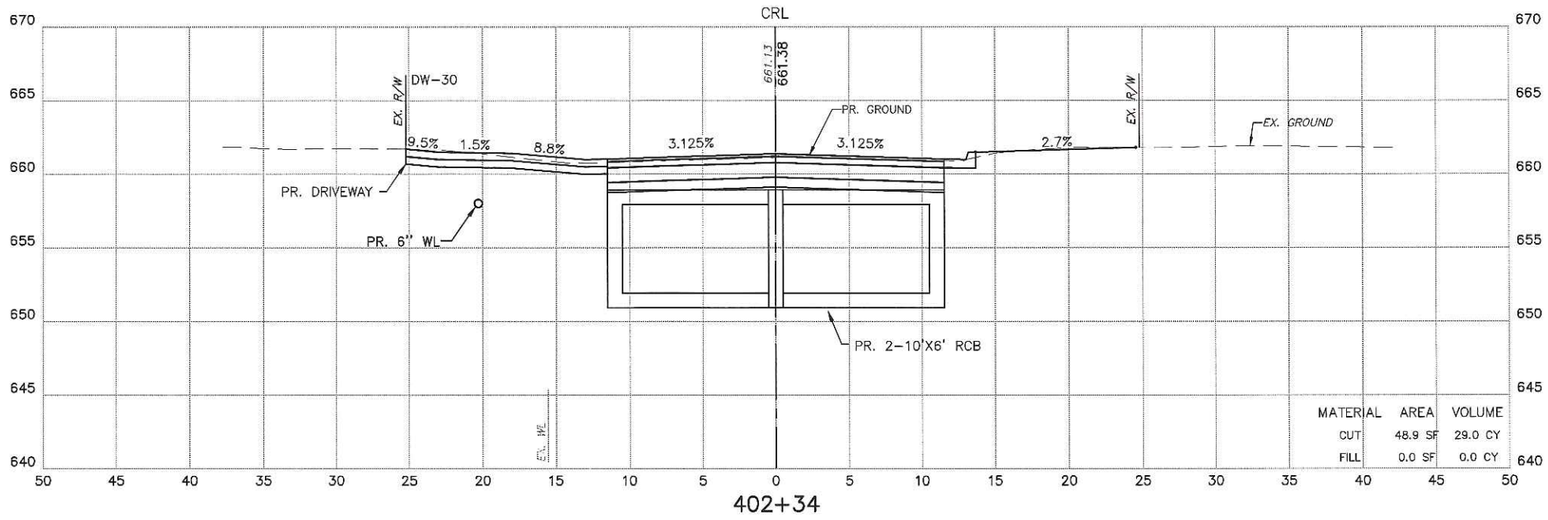

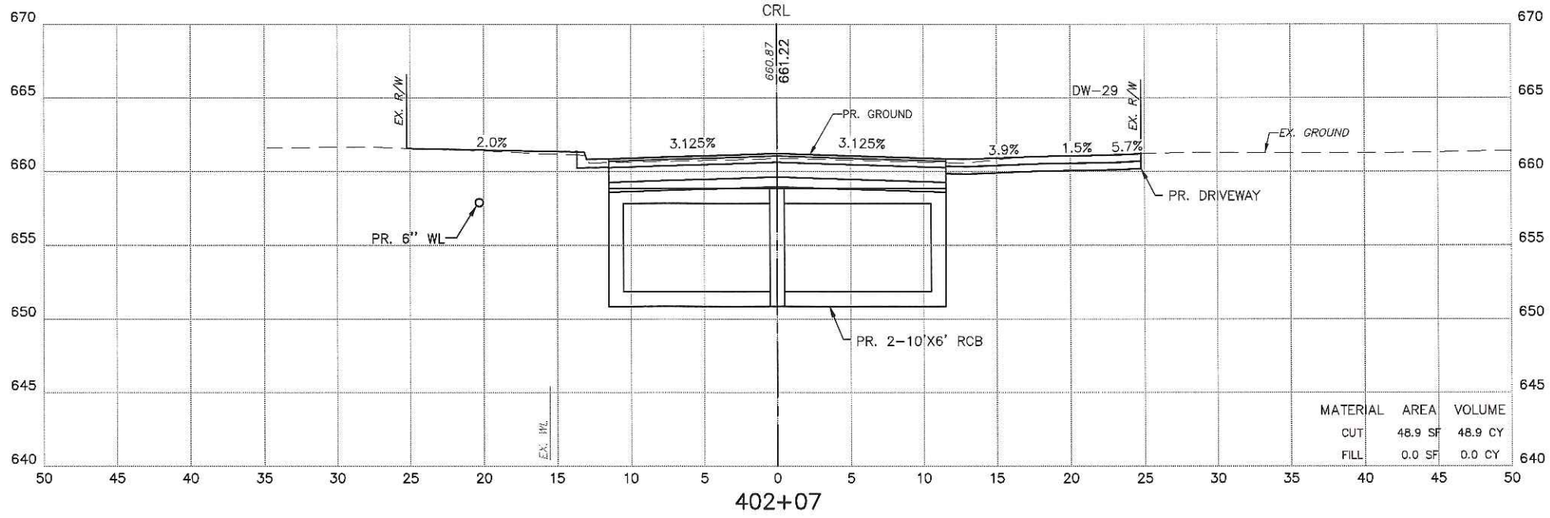

PRINT DATE: 08/07/2020 M:\City_of_Tulsa\18TUL02_MZ6028_Tupelo_Creek_Drainage\Design\Drawings\18TUL02_X_SECTIONS_E_17TH_PL.dwg

CROSS SECTIONS

PROJECT #144628-W, TMUA-W 18-16

MAINTENANCE ZONE 6028-W
TUPELO CREEK DRAINAGE

CITY OF TULSA, OKLAHOMA
ENGINEERING SERVICES DEPARTMENT

PLANS AND ESTIMATES PREPARED BY:
Meshek & Associates, L.L.C.
1437 S. Boulder Avenue, Suite 1550 Tulsa, OK 74119 (918)392-5820

REVISION	BY	DATE

PLAN SCALE	DRAWN	SCB	08/20	APPROVED:
N/A	DESIGNED	BWF	08/20	
	SURVEY	AB	08/18	
PROFILE SCALE	PROJ. MGR.			
HORIZONTAL: 1" = 5'	LEAD ENGR.			
	FIELD MGR.			
VERTICAL: 1" = 5'	RECOMMENDED			
	DESIGN MANAGER			CITY ENGINEER
FILE:	DRAWING:			DATE:
ATLAS PAGE NO. 235				SHEET 137 OF 161 SHEETS

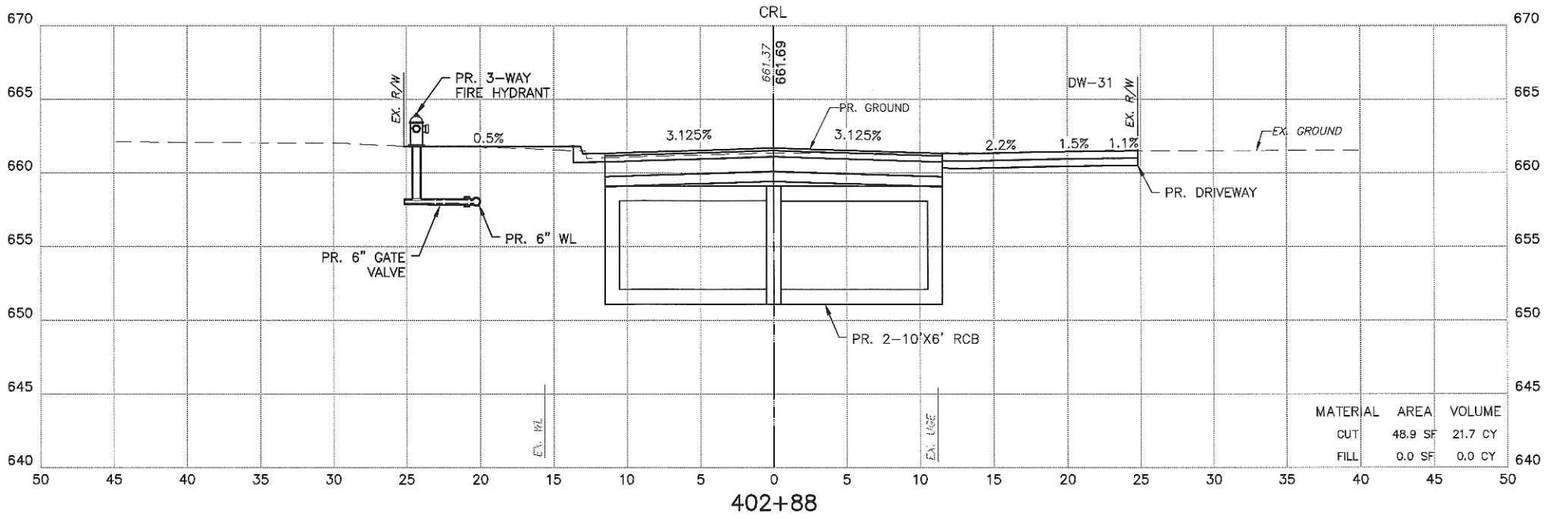

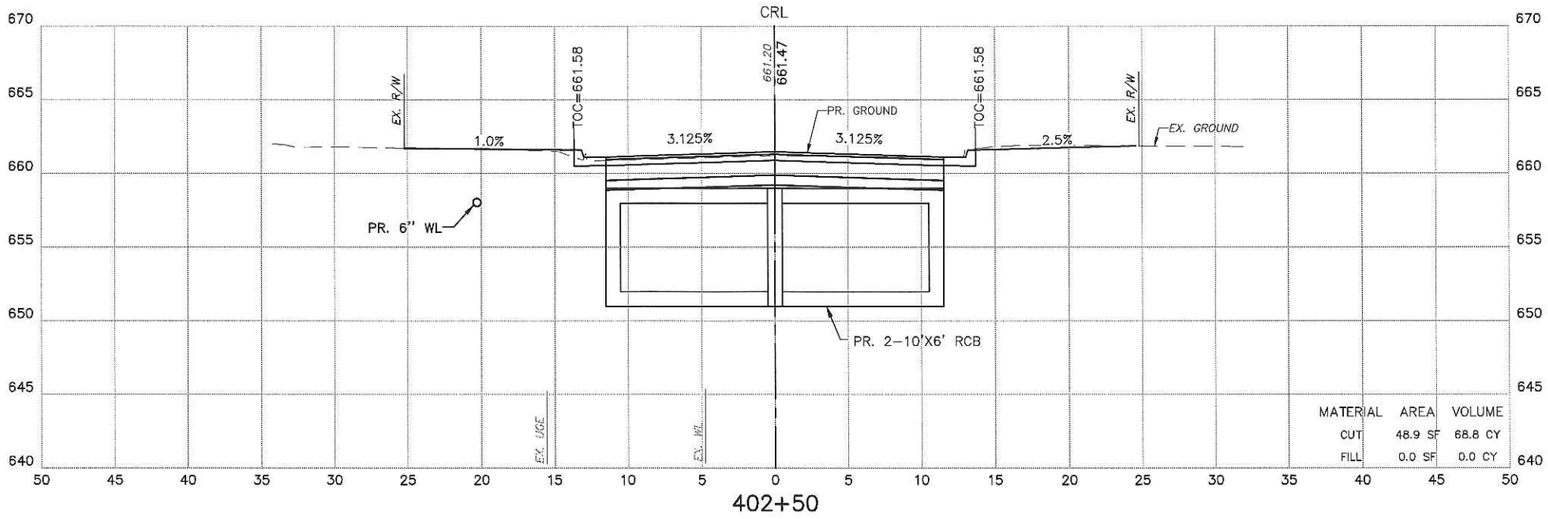

CROSS SECTIONS

PROJECT #144628-W, TMUA-W 18-16

MAINTENANCE ZONE 6028-W
TUPELO CREEK DRAINAGE

CITY OF TULSA, OKLAHOMA
ENGINEERING SERVICES DEPARTMENT

PLANS AND ESTIMATES PREPARED BY:
Meshek & Associates, L.L.C.
1437 S. Boulder Avenue, Suite 1550 Tulsa, OK 74119 (918)392-5620

REVISION	BY	DATE

PLAN SCALE N/A	DRAWN	SCB	08/20	APPROVED:
	DESIGNED	BWF	08/20	
	SURVEY	AB	08/18	
PROFILE SCALE	PROJ. MGR.			
HORIZONTAL: 1" = 5'	LEAD ENGR.			
	FIELD MGR.			
VERTICAL: 1" = 5'	RECOMMENDED DESIGN MANAGER			CITY ENGINEER
FILE:	DRAWING:			DATE:
ATLAS PAGE NO. 235				SHEET 138 OF 161 SHEETS

PRINT DATE: 08/07/2020 M:\City_of_Tulsa\18TUL02_MZ6028_Tupelo_Creek_Drainage\Design\Drawings\18TUL02_X_SECTIONS_E_17TH_PL.dwg

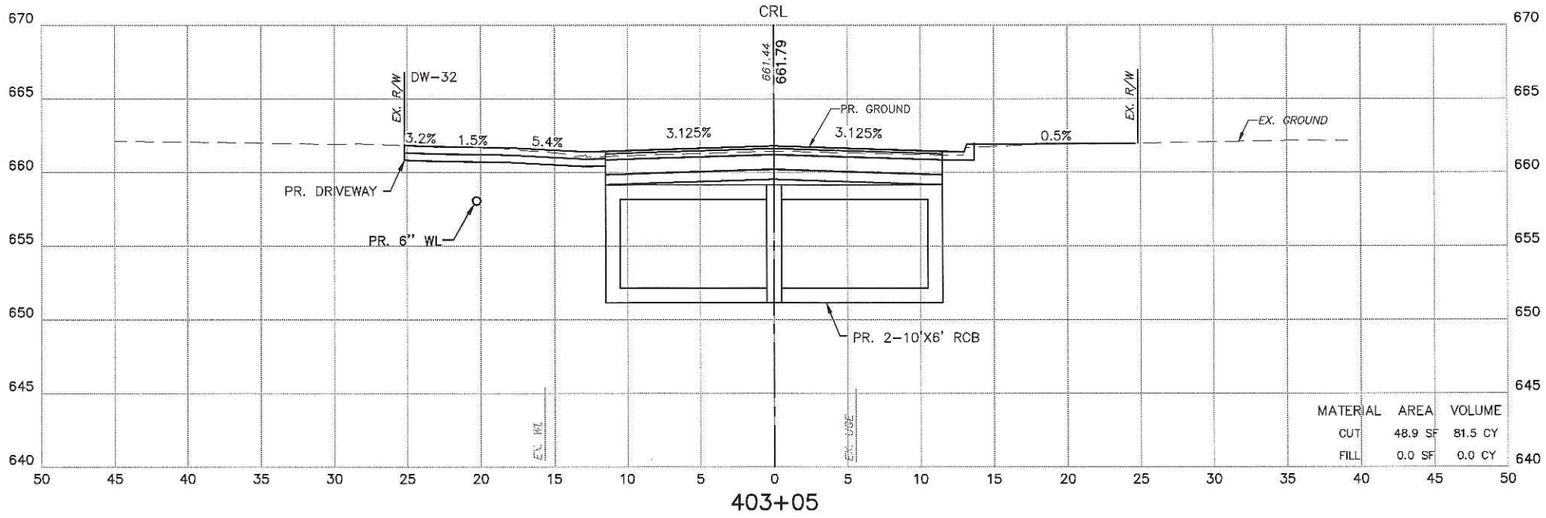

403+05

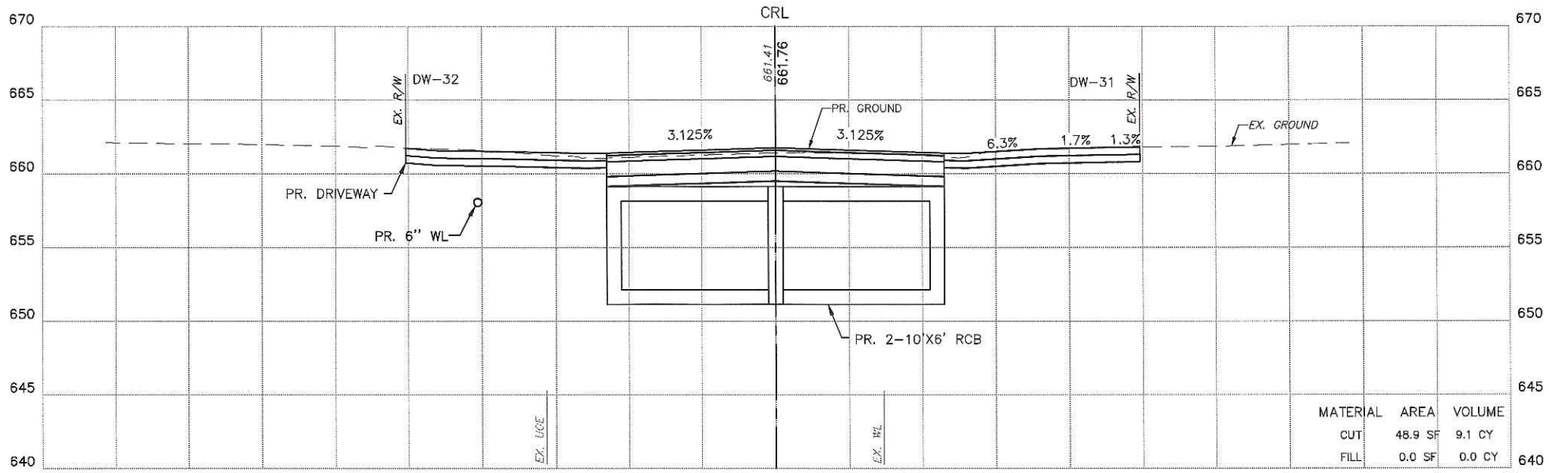

403+00

CROSS SECTIONS

PROJECT #144628-W, TMUA-W 18-16

MAINTENANCE ZONE 6028-W
TUPELO CREEK DRAINAGE

CITY OF TULSA, OKLAHOMA
ENGINEERING SERVICES DEPARTMENT

PLANS AND ESTIMATES PREPARED BY:
Meshek & Associates, L.L.C.
1437 S. Boulder Avenue, Suite 1550 Tulsa, OK 74119 (918)392-5620

REVISION	BY	DATE

PLAN SCALE	DRAWN	SCB	08/20
N/A	DESIGNED	BWF	08/20
	SURVEY	AB	08/18
PROFILE SCALE	PROJ. MGR.		
HORIZONTAL: 1" = 5'	LEAD ENGR.		
	FIELD MGR.		
VERTICAL: 1" = 5'	RECOMMENDED		
	DESIGN MANAGER		
FILE:	DRAWING:		
ATLAS PAGE NO. 235			

APPROVED:

CITY ENGINEER

DATE:

SHEET 139 OF 161 SHEETS

PRINT DATE: 08/07/2020 M:\City_of_Tulsa\18TUL02_MZ6028_Tupelo_Creek_Drainage\Design\Drawings\18TUL02_X_SECTIONS_E_17TH_PL.dwg

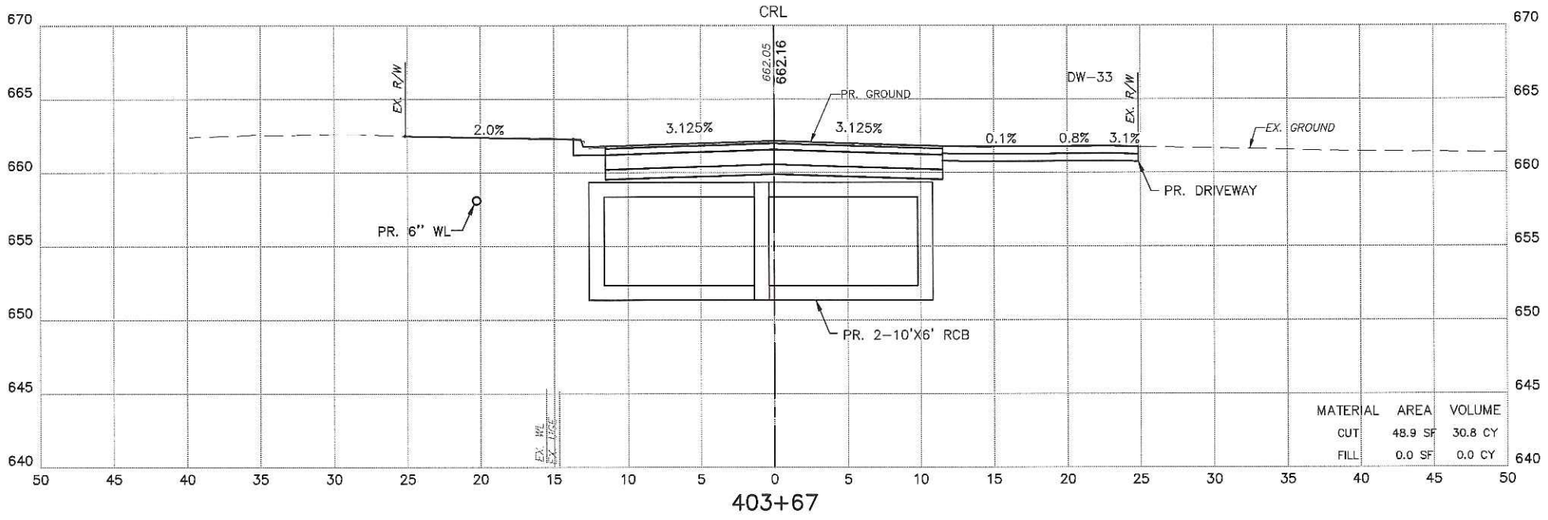

403+67

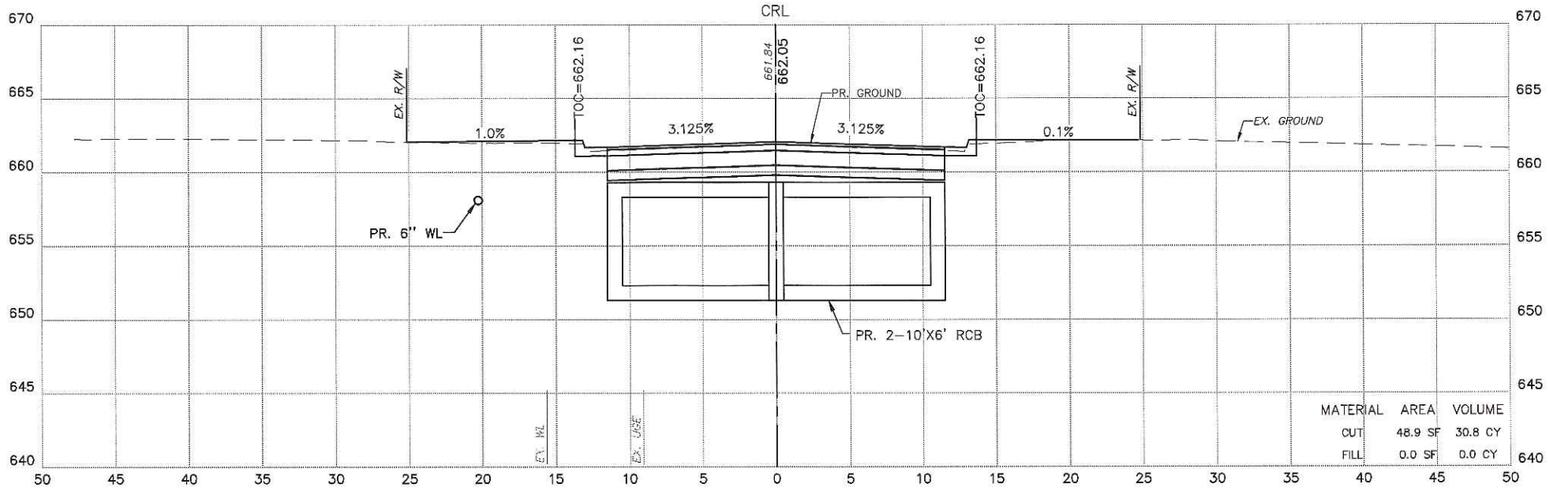

403+50

CROSS SECTIONS

PROJECT #144628-W, TMUA-W 18-16

MAINTENANCE ZONE 6028-W
TUPELO CREEK DRAINAGE

CITY OF TULSA, OKLAHOMA
ENGINEERING SERVICES DEPARTMENT

PLANS AND ESTIMATES PREPARED BY:
Meshek & Associates, L.L.C.
1437 S. Boulder Avenue, Suite 1550 Tulsa, OK 74119 (918)392-5620

REVISION	BY	DATE

PLAN SCALE N/A	DRAWN	SCB	08/20
	DESIGNED	BWF	08/20
	SURVEY	AB	08/18
PROFILE SCALE	PROJ. MGR.		
HORIZONTAL: 1" = 5'	LEAD ENGR.		
	FIELD MGR.		
VERTICAL: 1" = 5'	RECOMMENDED DESIGN MANAGER		
FILE:	DRAWING:		
ATLAS PAGE NO. 235			

APPROVED:

CITY ENGINEER

DATE:

SHEET 140 OF 161 SHEETS

PRINT DATE: 08/07/2020 M:\City_of_Tulsa\18TUL02_MZ6028_Tupelo_Creek_Drainage\Design\Drawings\18TUL02_X_SECTIONS_E_17TH_PL.dwg

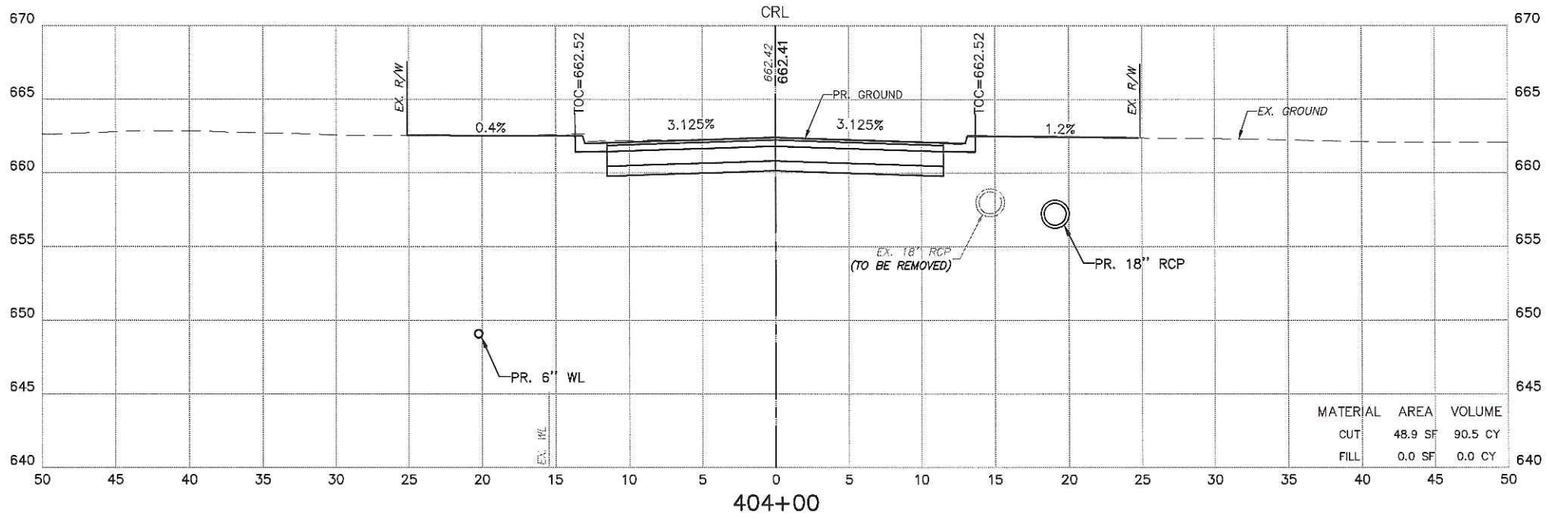

404+00

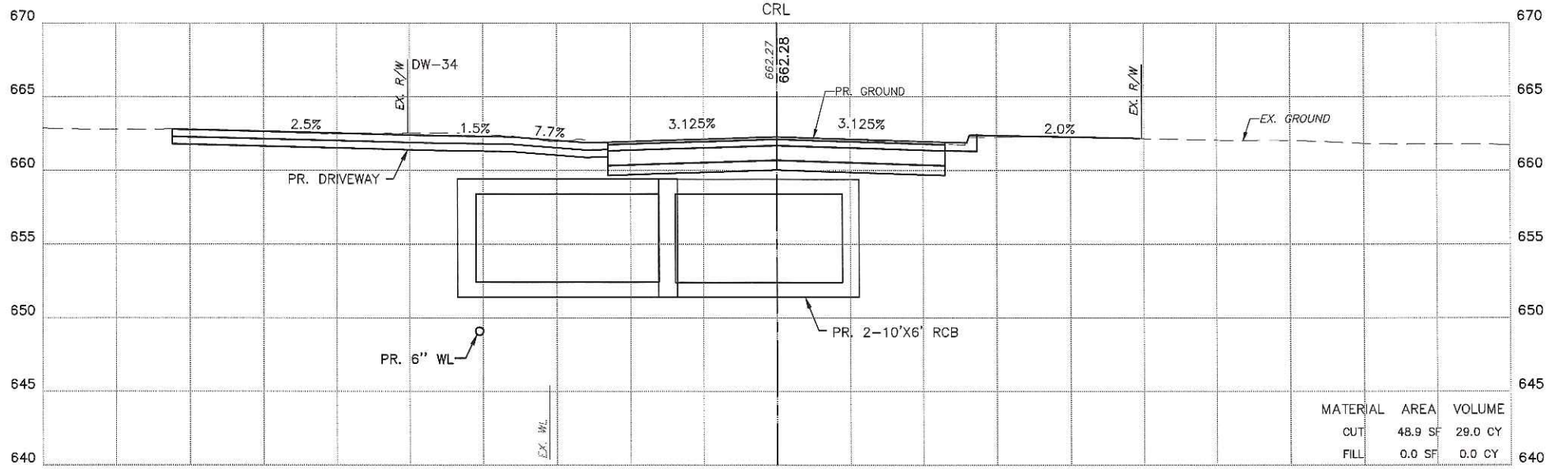

403+84

CROSS SECTIONS

PROJECT #144628-W, TMUA-W 18-16

MAINTENANCE ZONE 6028-W
TUPELO CREEK DRAINAGE

CITY OF TULSA, OKLAHOMA
ENGINEERING SERVICES DEPARTMENT

PLANS AND ESTIMATES PREPARED BY:
Meshek & Associates, L.L.C.
1437 S. Boulder Avenue, Suite 1550 Tulsa, OK 74119 (918)392-5620

REVISION	BY	DATE

PLAN SCALE	DRAWN	SCB	08/20
N/A	DESIGNED	BWF	08/20
	SURVEY	AB	08/18
PROFILE SCALE	PROJ. MGR.		
HORIZONTAL: 1" = 5'	LEAD ENGR.		
	FIELD MGR.		
VERTICAL: 1" = 5'	RECOMMENDED DESIGN MANAGER		
FILE:	DRAWING:		
ATLAS PAGE NO. 235			

APPROVED:

CITY ENGINEER

DATE:

SHEET 141 OF 161 SHEETS

PRINT DATE: 08/07/2020 M:\City_of_Tulsa\18TUL02_MZ6028_Tupelo_Creek_Drainage\Design\Drawings\18TUL02_X_SECTIONS_E_17TH_PL.dwg

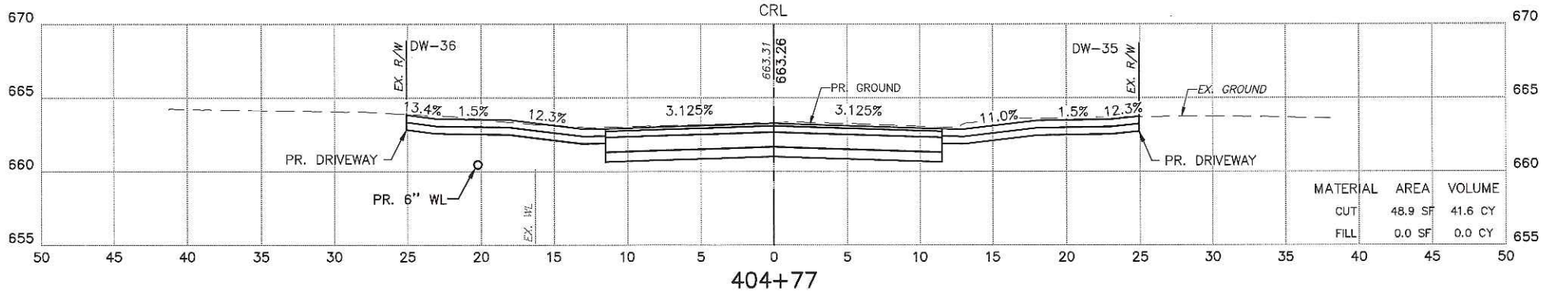

404+77

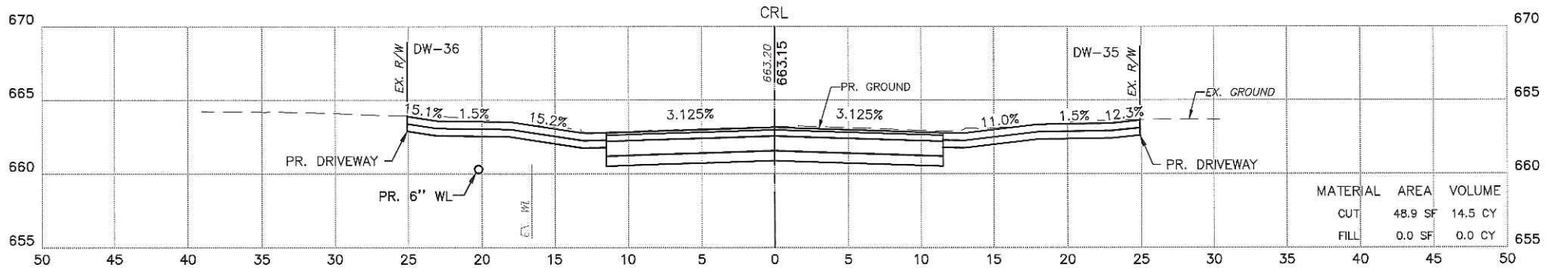

404+69

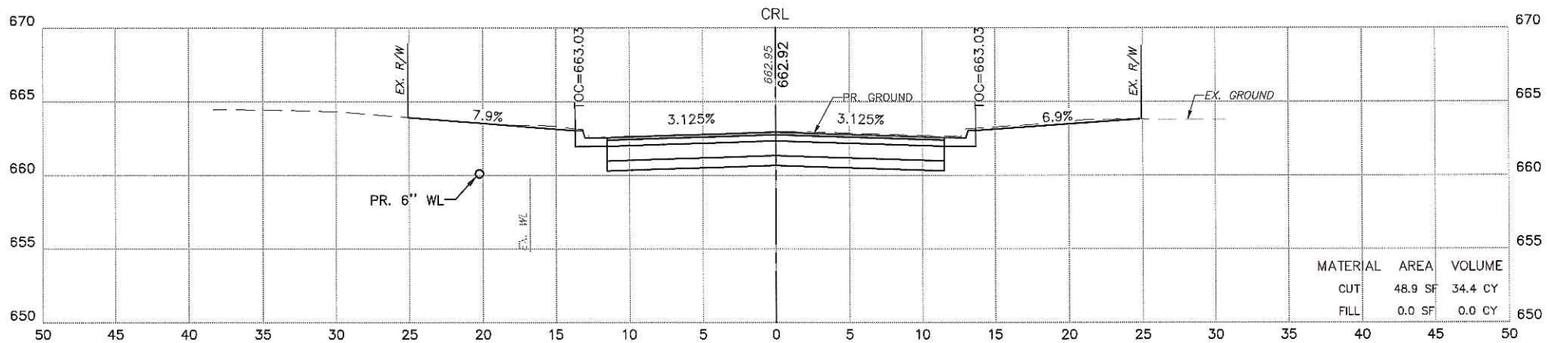

404+50

CROSS SECTIONS

PROJECT #144628-W, TMUA-W 18-16

MAINTENANCE ZONE 6028-W
TUPELO CREEK DRAINAGE

CITY OF TULSA, OKLAHOMA
ENGINEERING SERVICES DEPARTMENT

PLANS AND ESTIMATES PREPARED BY:
Meshek & Associates, L.L.C.
1437 S. Boulder Avenue, Suite 1550 Tulsa, OK 74119 (918)392-5620

REVISION	BY	DATE

PLAN SCALE: N/A
PROFILE SCALE
HORIZONTAL: 1" = 5'
VERTICAL: 1" = 5'

DRAWN	SCB	08/20	APPROVED:
DESIGNED	BWF	08/20	
SURVEY	AB	08/18	
PROJ. MGR.			
LEAD ENGR.			
FIELD MGR.			
RECOMMENDED DESIGN MANAGER			CITY ENGINEER
FILE: DRAWING:			DATE:
ATLAS PAGE NO. 235			SHEET 142 OF 161 SHEETS

PRINT DATE: 08/07/2020 M:\City_of_Tulsa\18TUL02_MZ6028_Tupelo_Creek_Drainage\Design\Drawings\18TUL02_X_SECTIONS_E_17TH_PL.dwg

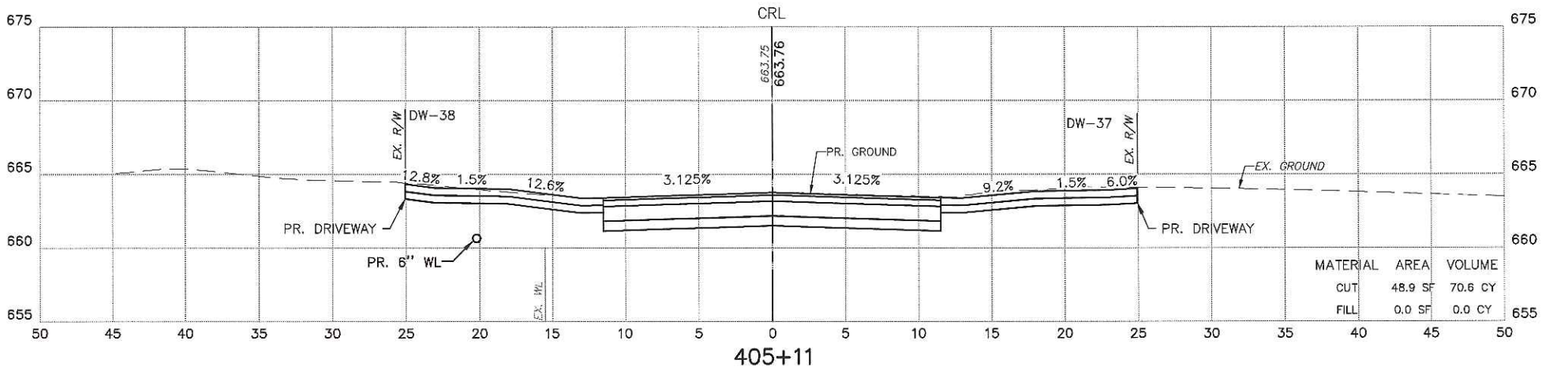

405+11

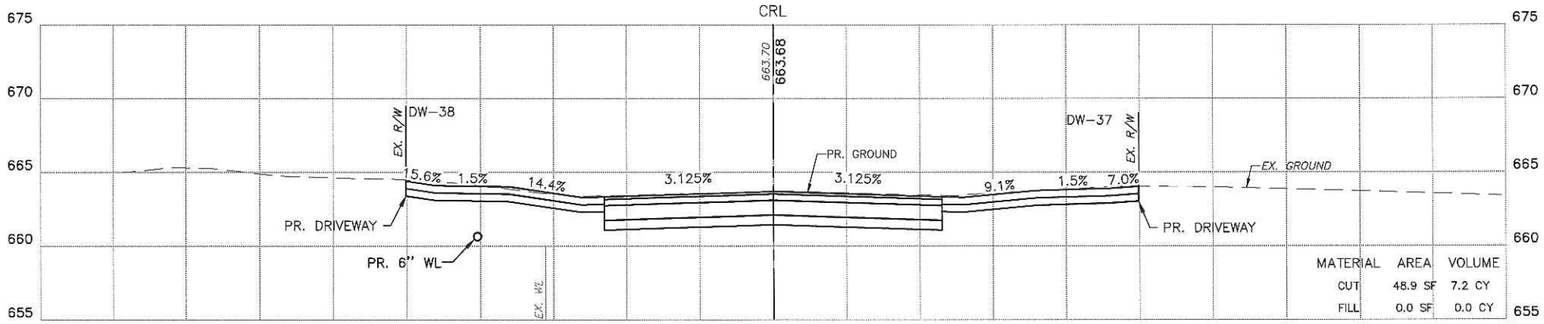

405+07

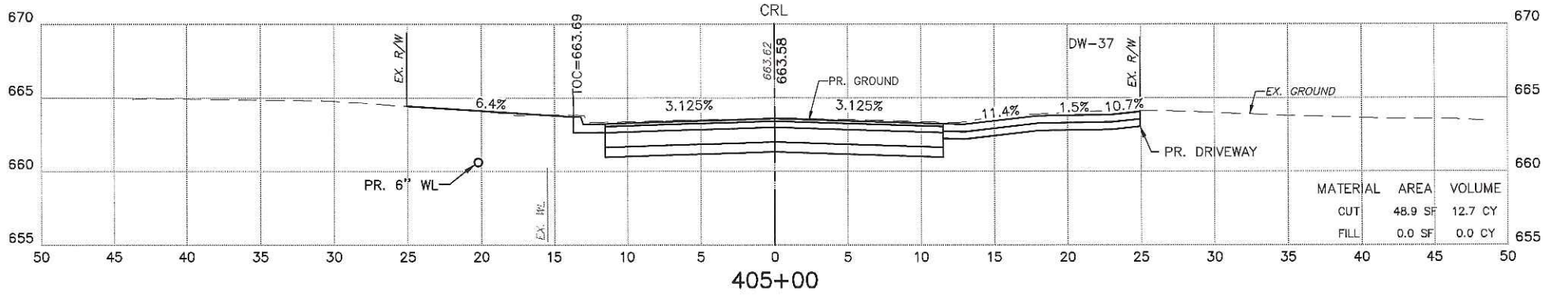

405+00

CROSS SECTIONS

PROJECT #144628-W, TMUA-W 18-16

MAINTENANCE ZONE 6028-W
TUPELO CREEK DRAINAGE

CITY OF TULSA, OKLAHOMA
ENGINEERING SERVICES DEPARTMENT

PLANS AND ESTIMATES PREPARED BY:
Meshek & Associates, L.L.C.
1437 S. Boulder Avenue, Suite 1550 Tulsa, OK 74119 (918)392-5620

REVISION	BY	DATE

PLAN SCALE	DRAWN	SCB	08/20	APPROVED:
N/A	DESIGNED	BWF	08/20	
	SURVEY	AB	08/18	
PROFILE SCALE	PROJ. MGR.			
HORIZONTAL: 1" = 5'	LEAD ENGR.			
	FIELD MGR.			
VERTICAL: 1" = 5'	RECOMMENDED			
	DESIGN MANAGER			CITY ENGINEER
FILE:	DRAWING:			DATE:
ATLAS PAGE NO. 235				SHEET 143 OF 161 SHEETS

PRINT DATE: 08/07/2020 M:\City_of_Tulsa\18TUL02_MZ6028_Tupelo_Creek_Drainage\Design\Drawings\18TUL02_X_SECTIONS_E_17TH_PL.dwg

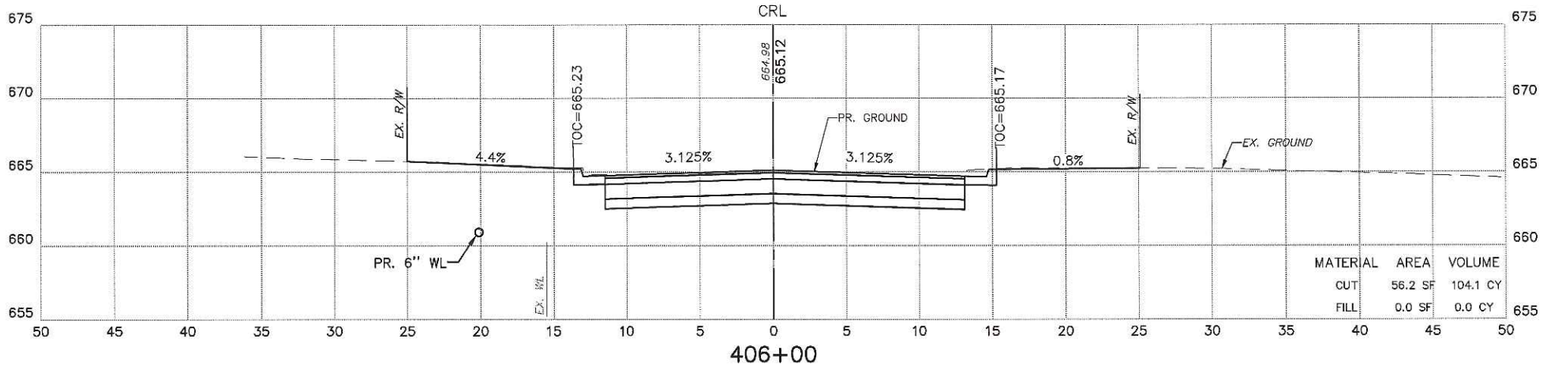

406+00

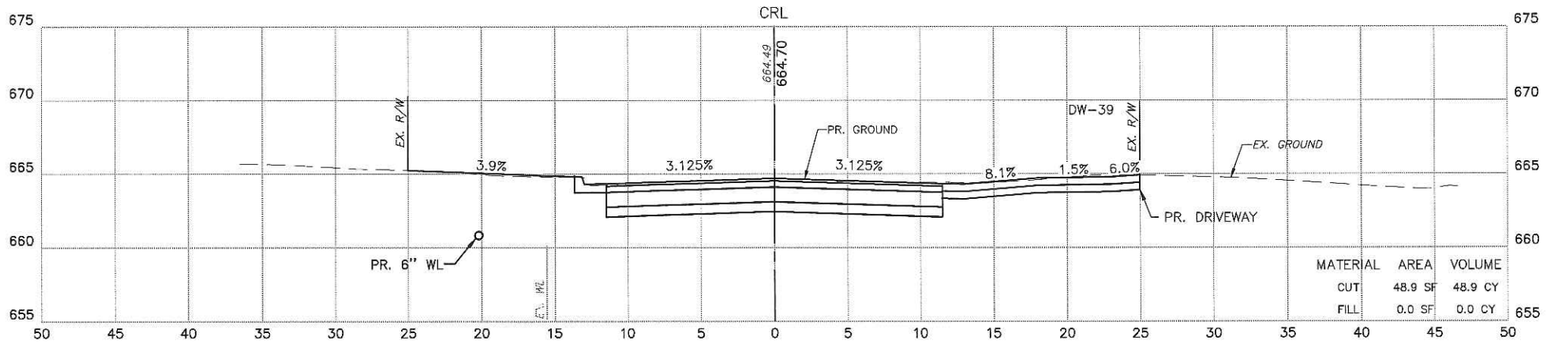

405+73

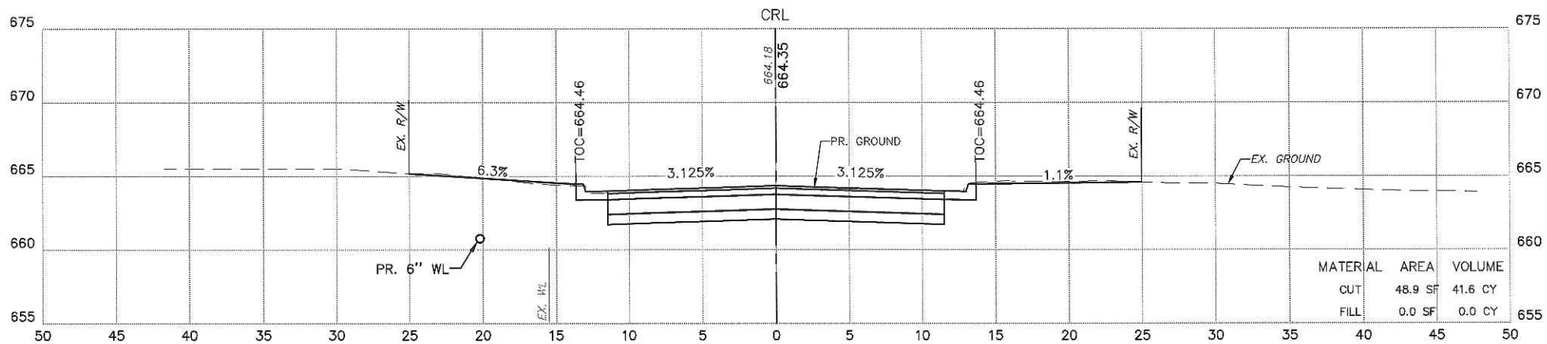

405+50

CROSS SECTIONS

PROJECT #144628-W, TMUA-W 18-16

MAINTENANCE ZONE 6028-W
TUPELO CREEK DRAINAGE

CITY OF TULSA, OKLAHOMA
ENGINEERING SERVICES DEPARTMENT

PLANS AND ESTIMATES PREPARED BY:
Meshek & Associates, L.L.C.
1437 S. Boulder Avenue, Suite 1550 Tulsa, OK 74119 (918)392-5620

REVISION	BY	DATE

PLAN SCALE: N/A
PROFILE SCALE
HORIZONTAL: 1" = 5'
VERTICAL: 1" = 5'

DRAWN	SCB	08/20	APPROVED:
DESIGNED	BWF	08/20	
SURVEY	AB	08/18	
PROJ. MGR.			
LEAD ENGR.			
FIELD MGR.			
RECOMMENDED DESIGN MANAGER			CITY ENGINEER

FILE: DRAWING: DATE:

ATLAS PAGE NO. 235 SHEET 144 OF 161 SHEETS

PRINT DATE: 08/07/2020 M:\City_of_Tulsa\18TUL02_WZ6028_Tupelo_Creek_Drainage\Design\Drawings\18TUL02_X_SECTIONS_E_17TH_PL.dwg

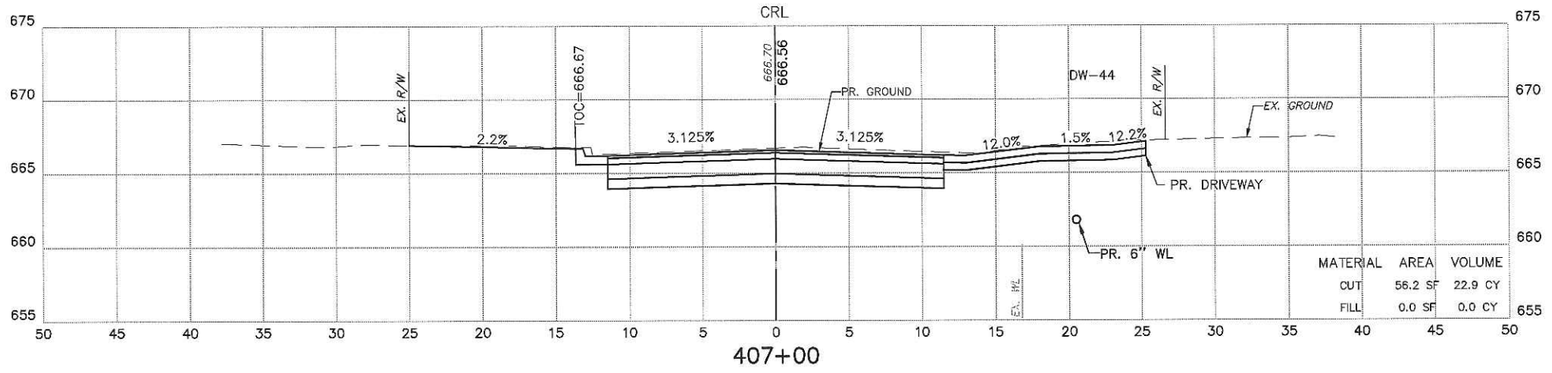

407+00

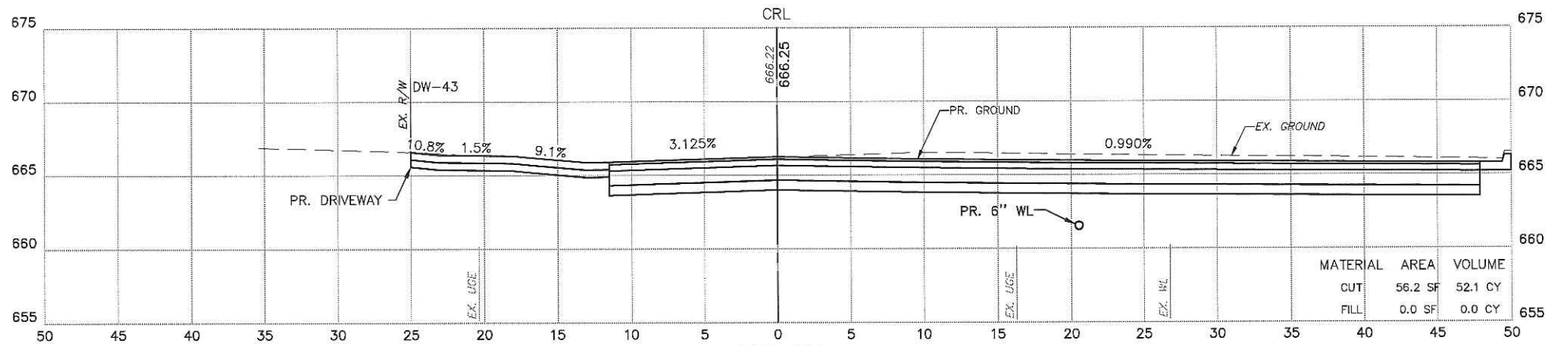

406+75

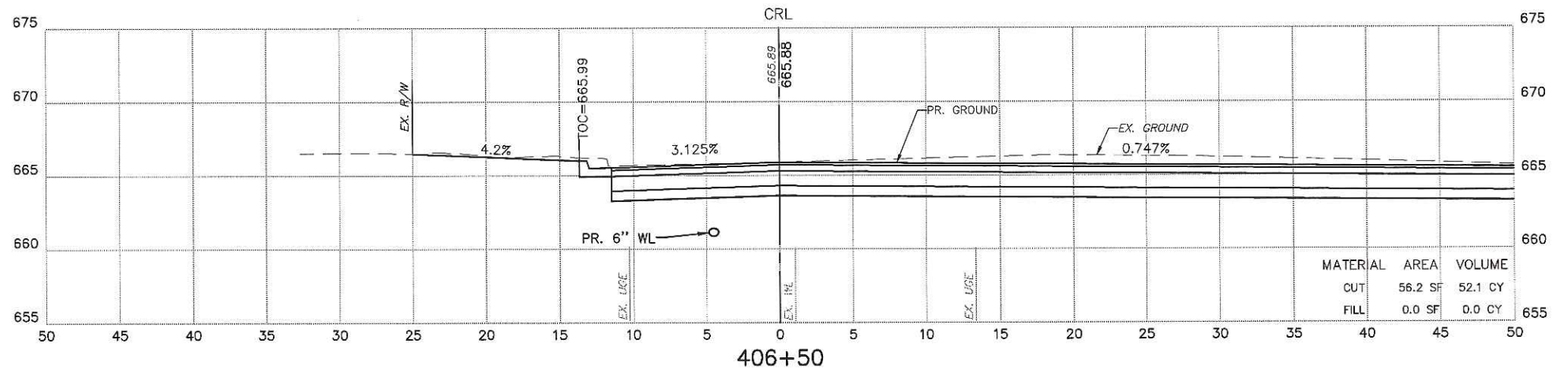

406+50

CROSS SECTIONS

PROJECT #144628-W, TMUA-W 18-16

MAINTENANCE ZONE 6028-W
TUPELO CREEK DRAINAGE

CITY OF TULSA, OKLAHOMA
ENGINEERING SERVICES DEPARTMENT

PLANS AND ESTIMATES PREPARED BY:
Meshek & Associates, L.L.C.
1437 S. Boulder Avenue, Suite 1550 Tulsa, OK 74119 (918)392-5620

REVISION	BY	DATE

PLAN SCALE	DRAWN	SCB	08/20	APPROVED:
N/A	DESIGNED	BWF	08/20	
	SURVEY	AB	08/18	
PROFILE SCALE	PROJ. MGR.			
HORIZONTAL: 1" = 5'	LEAD ENGR.			
	FIELD MGR.			
VERTICAL: 1" = 5'	RECOMMENDED DESIGN MANAGER			CITY ENGINEER
FILE:	DRAWING:			DATE:
ATLAS PAGE NO. 235				SHEET 145 OF 161 SHEETS

PRINT DATE: 08/07/2020 M:\City_of_Tulsa\18TUL02_MZ6028_Tupelo_Creek_Drainage\Design\Drawings\18TUL02_X_SECTIONS_E_17TH_PL.dwg

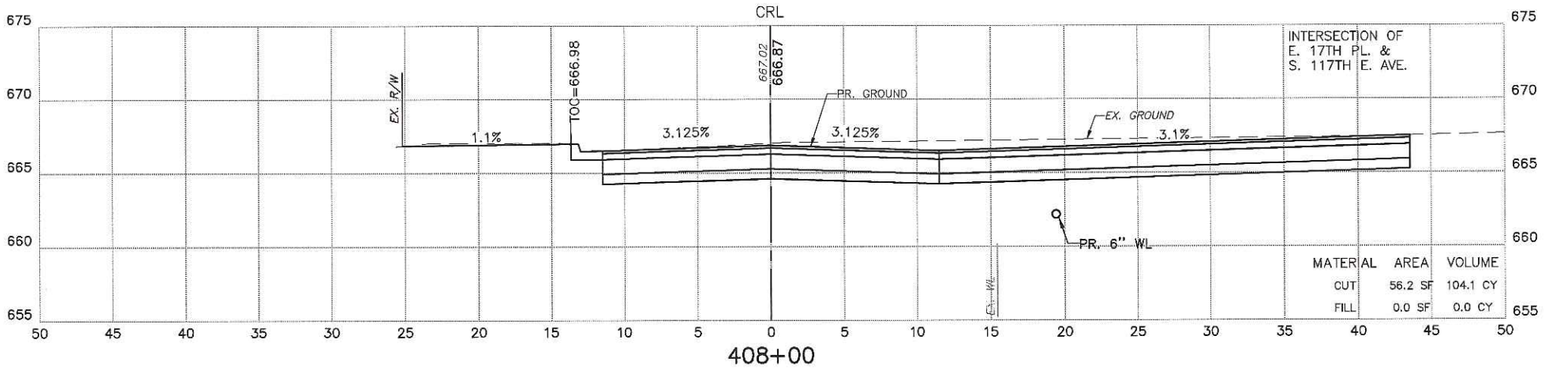

408+00

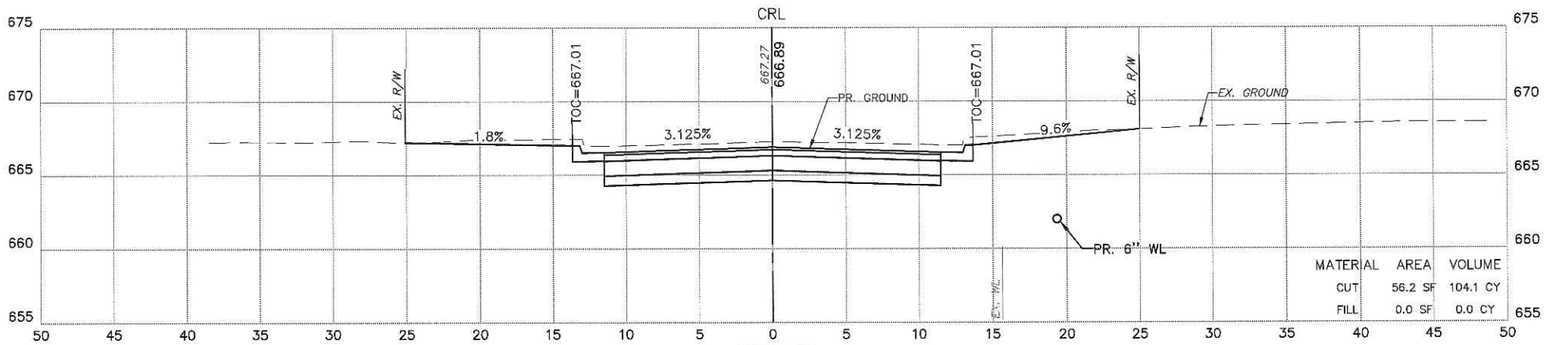

407+50

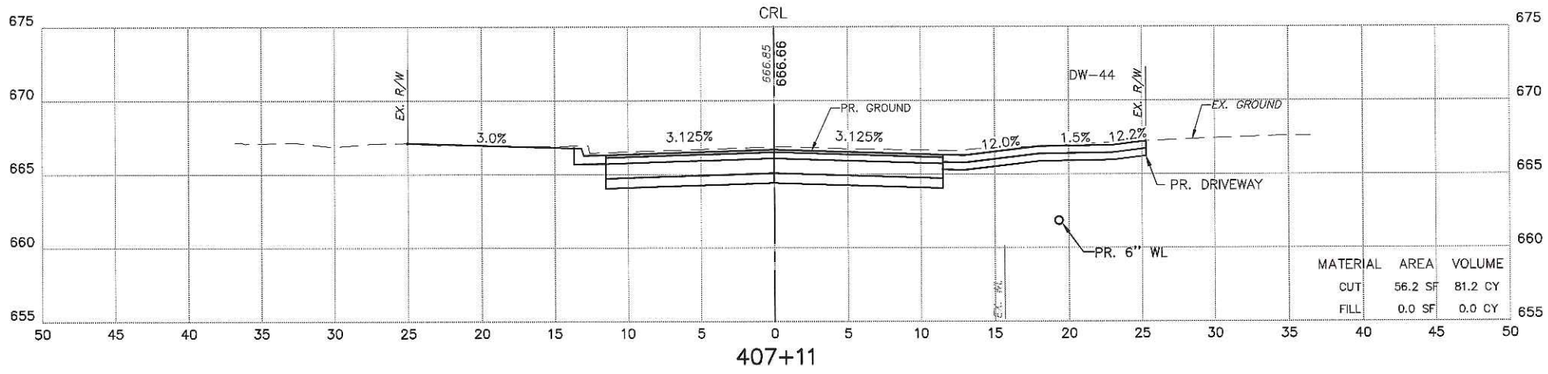

407+11

CROSS SECTIONS

PROJECT #144628-W, TMUA-W 18-16

MAINTENANCE ZONE 6028-W
TUPELO CREEK DRAINAGE

CITY OF TULSA, OKLAHOMA
ENGINEERING SERVICES DEPARTMENT

PLANS AND ESTIMATES PREPARED BY:
Meshek & Associates, L.L.C.
1437 S. Boulder Avenue, Suite 1550 Tulsa, OK 74119 (918)392-5620

REVISION	BY	DATE

PLAN SCALE	DRAWN	SCB	08/20	APPROVED:
N/A	DESIGNED	BWF	08/20	
	SURVEY	AB	08/18	
PROFILE SCALE	PROJ. MGR.			
HORIZONTAL: 1" = 5'	LEAD ENGR.			
	FIELD MGR.			
VERTICAL: 1" = 5'	RECOMMENDED			
	DESIGN MANAGER			CITY ENGINEER
FILE:	DRAWING:			DATE:
ATLAS PAGE NO. 235				SHEET 146 OF 161 SHEETS

PRINT DATE: 08/07/2020 M:\City_of_Tulsa\18TUL02_MZ6028_Tupelo_Creek_Drainage\Design\Drawings\18TUL02_X_SECTIONS_E_17TH_PL.dwg

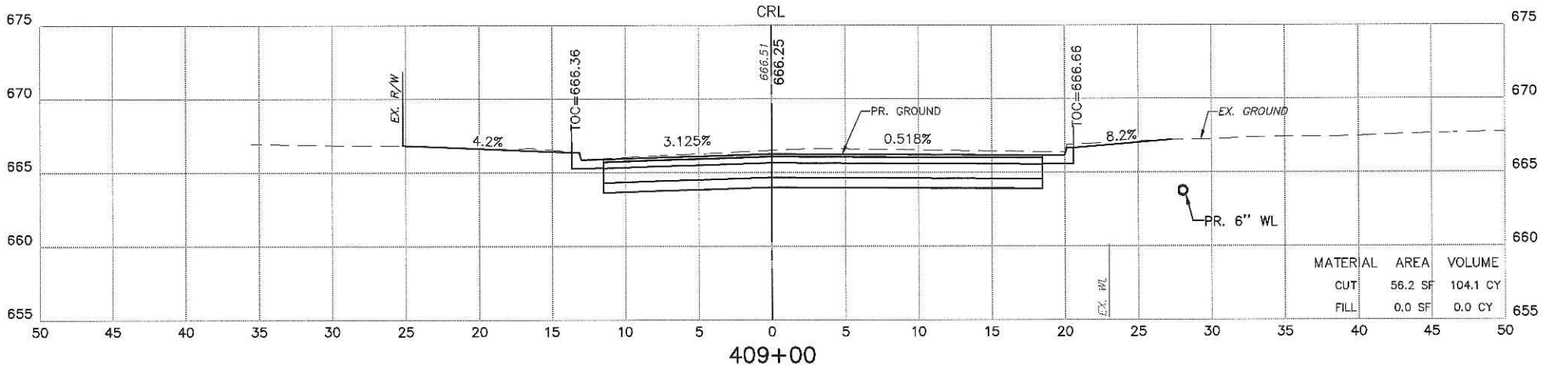

409+00

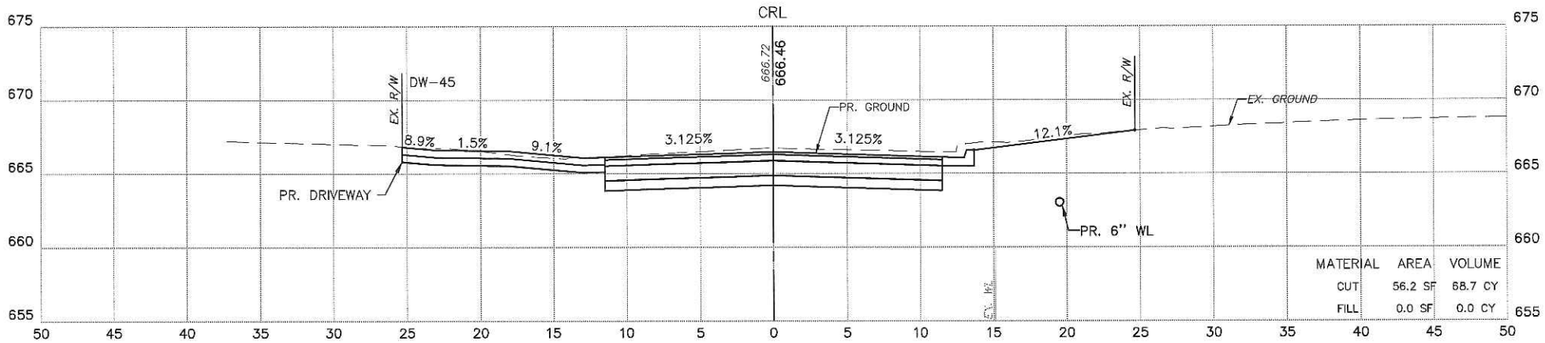

408+67

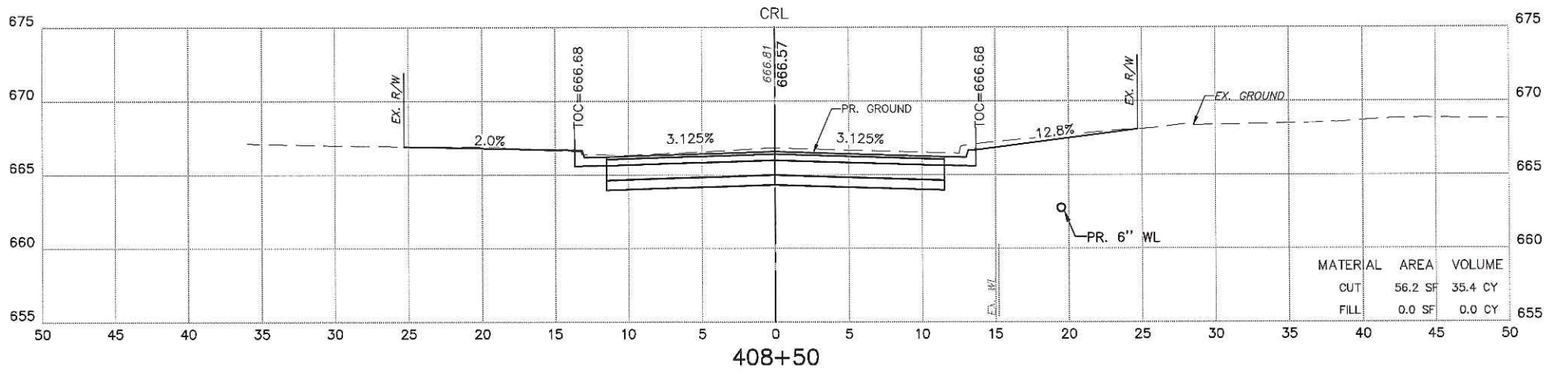

408+50

CROSS SECTIONS

PROJECT #144628-W, TMUA-W 18-16

MAINTENANCE ZONE 6028-W
TUPELO CREEK DRAINAGE

CITY OF TULSA, OKLAHOMA
ENGINEERING SERVICES DEPARTMENT

PLANS AND ESTIMATES PREPARED BY:
Meshek & Associates, L.L.C.
1437 S. Boulder Avenue, Suite 1550 Tulsa, OK 74119 (918)392-5620

REVISION	BY	DATE

PLAN SCALE	DRAWN	SCB	08/20	APPROVED:
N/A	DESIGNED	BWF	08/20	
	SURVEY	AB	08/18	
PROFILE SCALE	PROJ. MGR.			
HORIZONTAL: 1" = 5'	LEAD ENGR.			
	FIELD MGR.			
VERTICAL: 1" = 5'	RECOMMENDED			
	DESIGN MANAGER			CITY ENGINEER
FILE:	DRAWING:			DATE:
ATLAS PAGE NO. 235				SHEET 147 OF 161 SHEETS

PRINT DATE: 08/07/2020 M:\City_of_Tulsa\18TUL02_MZ6028_Tupelo_Creek_Drainage\Design\Drawings\18TUL02_X_SECTIONS_E_17TH_PL.dwg

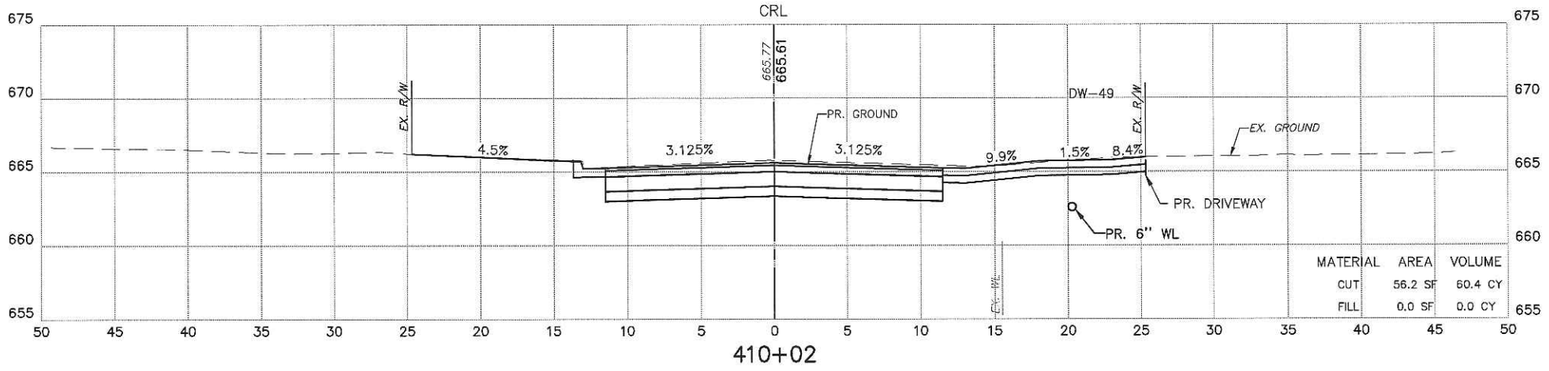

410+02

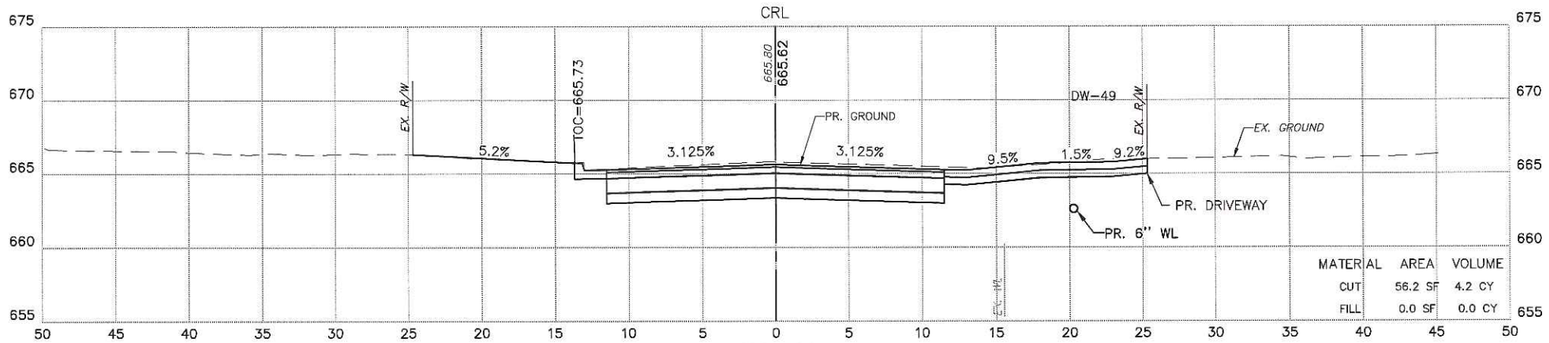

410+00

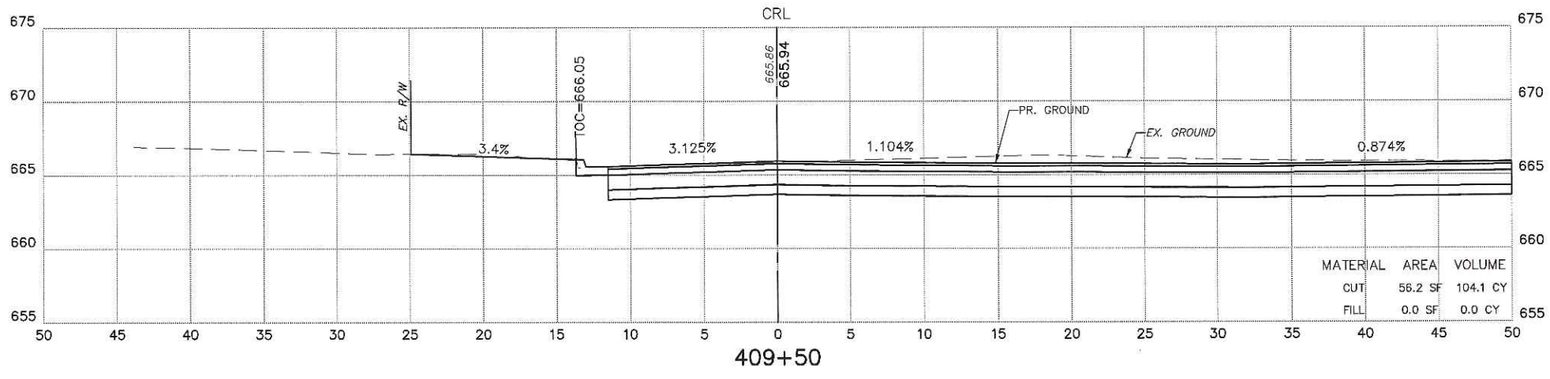

409+50

CROSS SECTIONS

PROJECT #144628-W, TMUA-W 18-16

MAINTENANCE ZONE 6028-W
TUPELO CREEK DRAINAGE

CITY OF TULSA, OKLAHOMA
ENGINEERING SERVICES DEPARTMENT

PLANS AND ESTIMATES PREPARED BY:
Meshek & Associates, L.L.C.
1437 S. Boulder Avenue, Suite 1550 Tulsa, OK 74119 (918)392-5620

REVISION	BY	DATE

PLAN SCALE: N/A
PROFILE SCALE
HORIZONTAL: 1" = 5'
VERTICAL: 1" = 5'

DRAWN	SCB	08/20	APPROVED:
DESIGNED	BWF	08/20	
SURVEY	AB	08/18	
PROJ. MGR.			
LEAD ENGR.			
FIELD MGR.			
RECOMMENDED DESIGN MANAGER			CITY ENGINEER

FILE: DRAWING: DATE:

ATLAS PAGE NO. 235

SHEET 148 OF 161 SHEETS

PRINT DATE: 08/07/2020 M:\City_of_Tulsa\18TUL02_MZ6028_Tupelo_Creek_Drainage\Design\Drawings\18TUL02_X_SECTIONS_E_17TH_PL.dwg

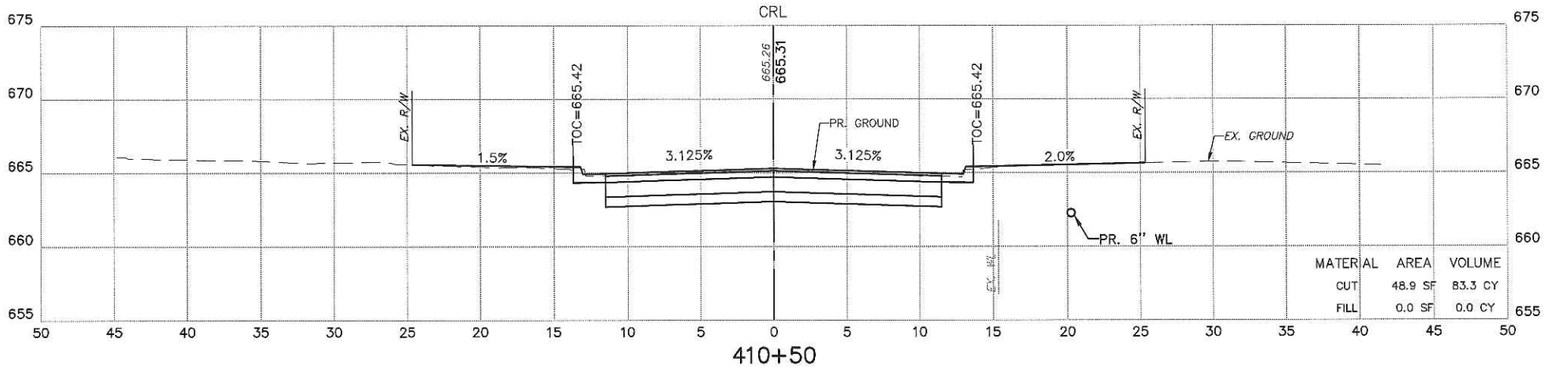

410+50

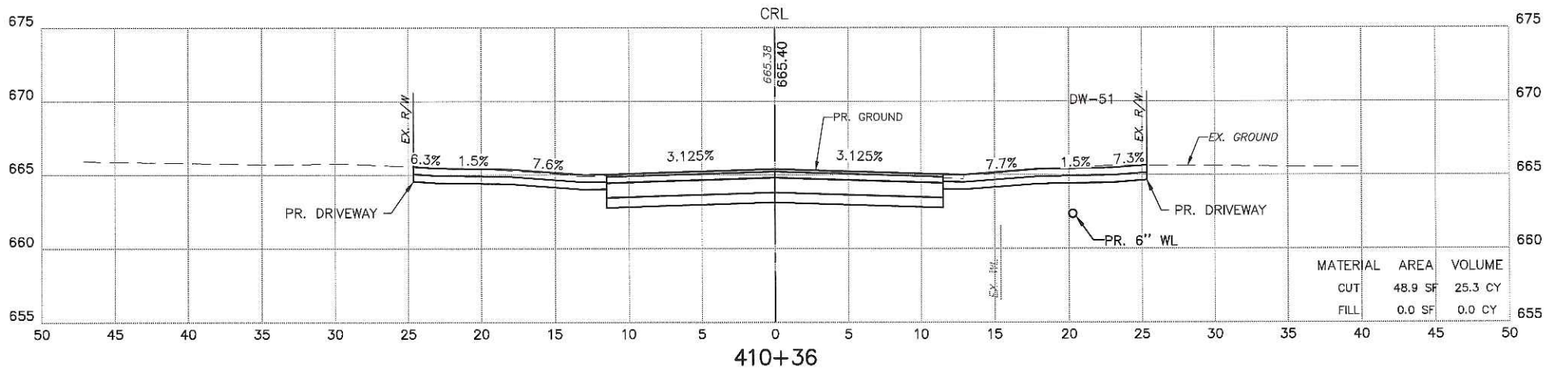

410+36

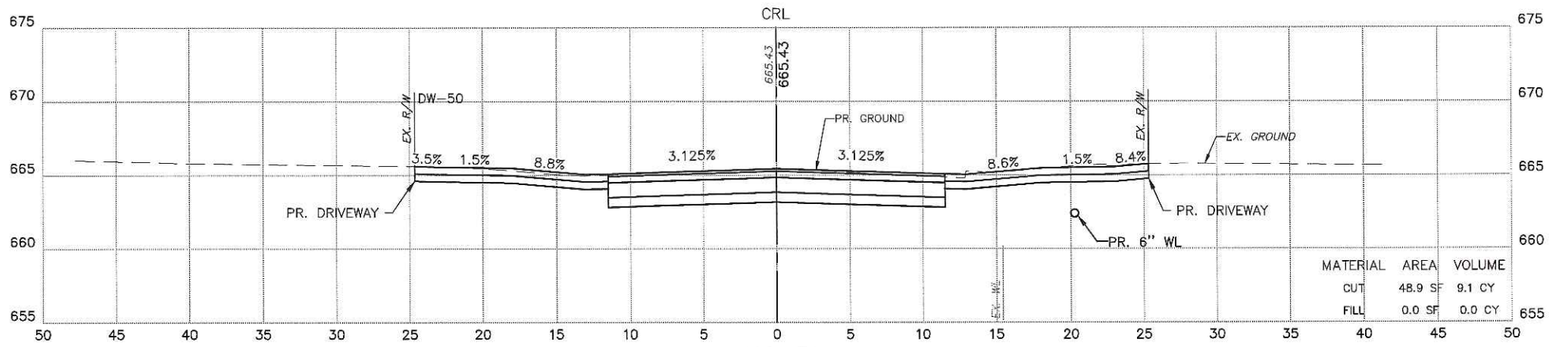

410+31

CROSS SECTIONS

PROJECT #144628-W, TMUA-W 18-16

MAINTENANCE ZONE 6028-W
TUPELO CREEK DRAINAGE

CITY OF TULSA, OKLAHOMA
ENGINEERING SERVICES DEPARTMENT

PLANS AND ESTIMATES PREPARED BY:
Meshek & Associates, L.L.C.
1437 S. Boulder Avenue, Suite 1550 Tulsa, OK 74119 (918)392-5620

REVISION	BY	DATE

PLAN SCALE	DRAWN	SCB	08/20
N/A	DESIGNED	BWF	08/20
	SURVEY	AB	08/18
PROFILE SCALE	PROJ. MGR.		
HORIZONTAL: 1" = 5'	LEAD ENGR.		
	FIELD MGR.		
VERTICAL: 1" = 5'	RECOMMENDED DESIGN MANAGER		
FILE:	DRAWING:		
ATLAS PAGE NO. 235			

APPROVED:

CITY ENGINEER

DATE:

SHEET 149 OF 161 SHEETS

PRINT DATE: 08/07/2020 M:\City_of_Tulsa\18TUL02_MZ6028_Tupelo_Creek_Drainage\Design\Drawings\18TUL02_X_SECTIONS_E_17TH_PL.dwg

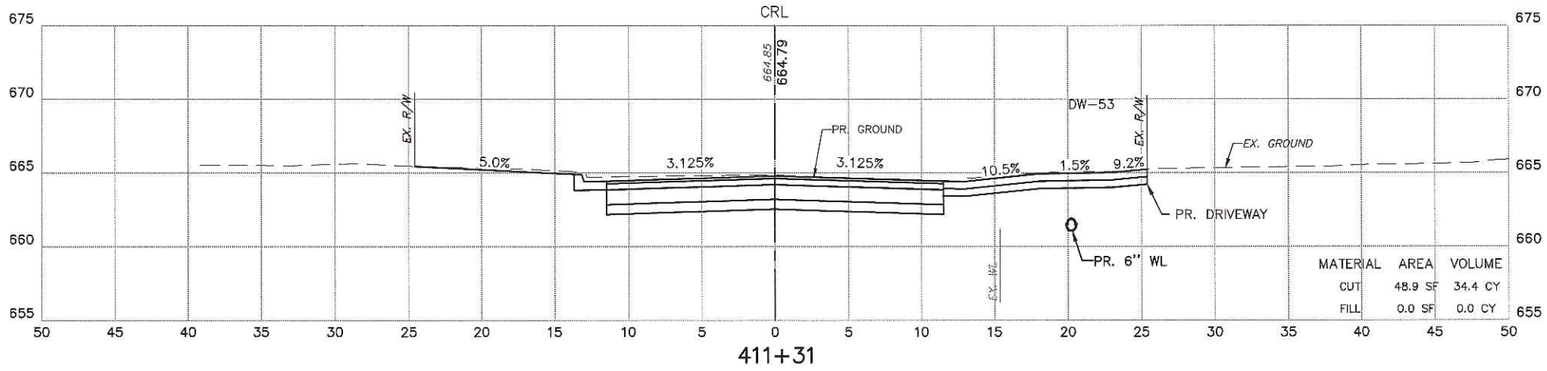

411+31

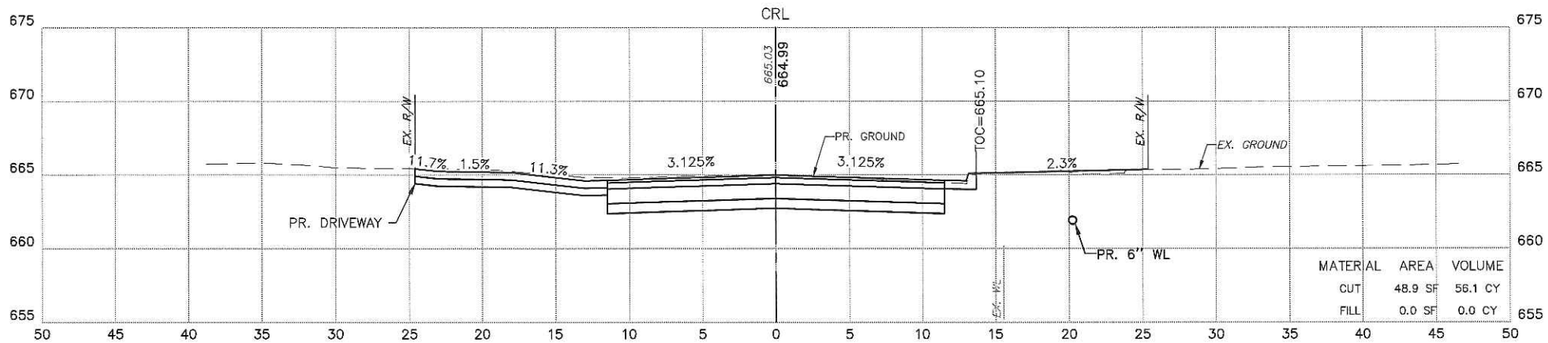

411+00

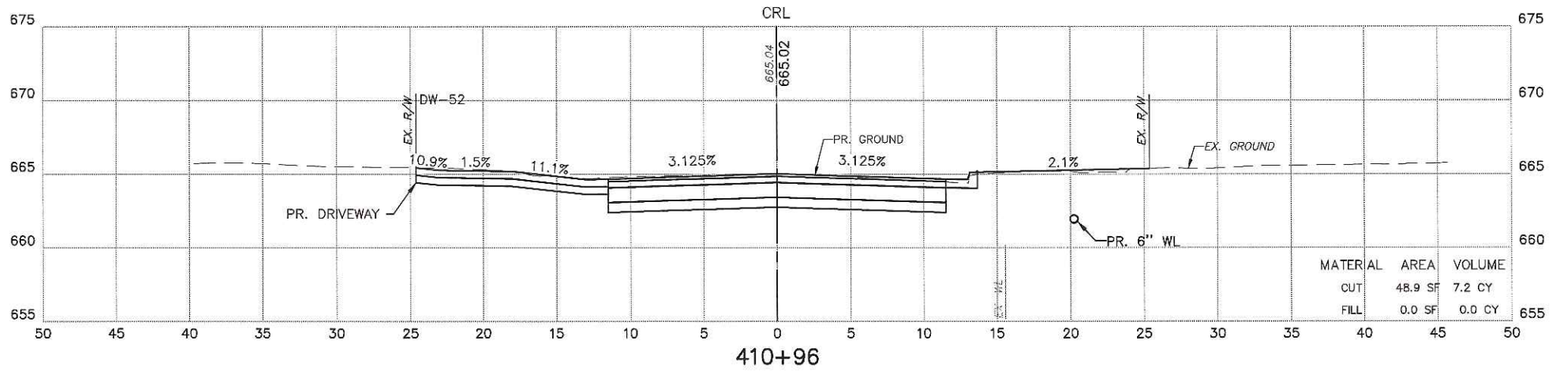

410+96

CROSS SECTIONS

PROJECT #144628-W, TMUA-W 18-16

MAINTENANCE ZONE 6028-W
TUPELO CREEK DRAINAGE

CITY OF TULSA, OKLAHOMA
ENGINEERING SERVICES DEPARTMENT

PLANS AND ESTIMATES PREPARED BY:
Meshek & Associates, L.L.C.
1437 S. Boulder Avenue, Suite 1550 Tulsa, OK 74119 (918)392-5620

REVISION	BY	DATE

PLAN SCALE	DRAWN	SCB	08/20	APPROVED:
N/A	DESIGNED	BWF	08/20	
	SURVEY	AB	08/18	
PROFILE SCALE	PROJ. MGR.			
HORIZONTAL: 1" = 5'	LEAD ENGR.			
	FIELD MGR.			
VERTICAL: 1" = 5'	RECOMMENDED			
	DESIGN MANAGER			CITY ENGINEER
FILE:	DRAWING:			DATE:
ATLAS PAGE NO. 235				SHEET 150 OF 161 SHEETS

PRINT DATE: 08/07/2020 M:\City_of_Tulsa\18TUL02_MZ6028_Tupelo_Creek_Drainage\Design\Drawings\18TUL02_X_SECTIONS_E_17TH_PL.dwg

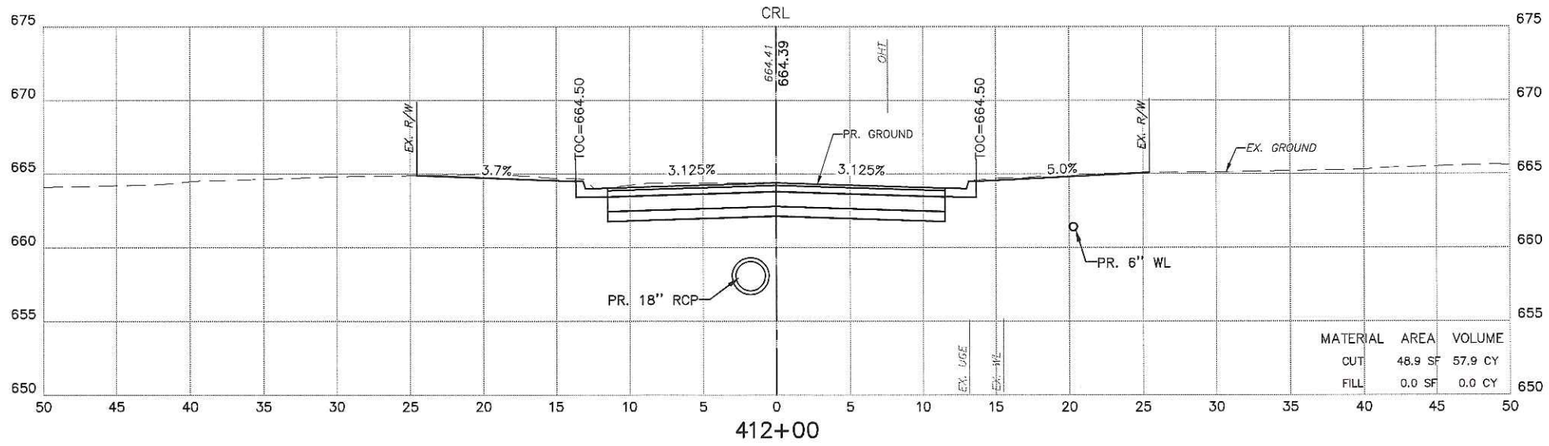

412+00

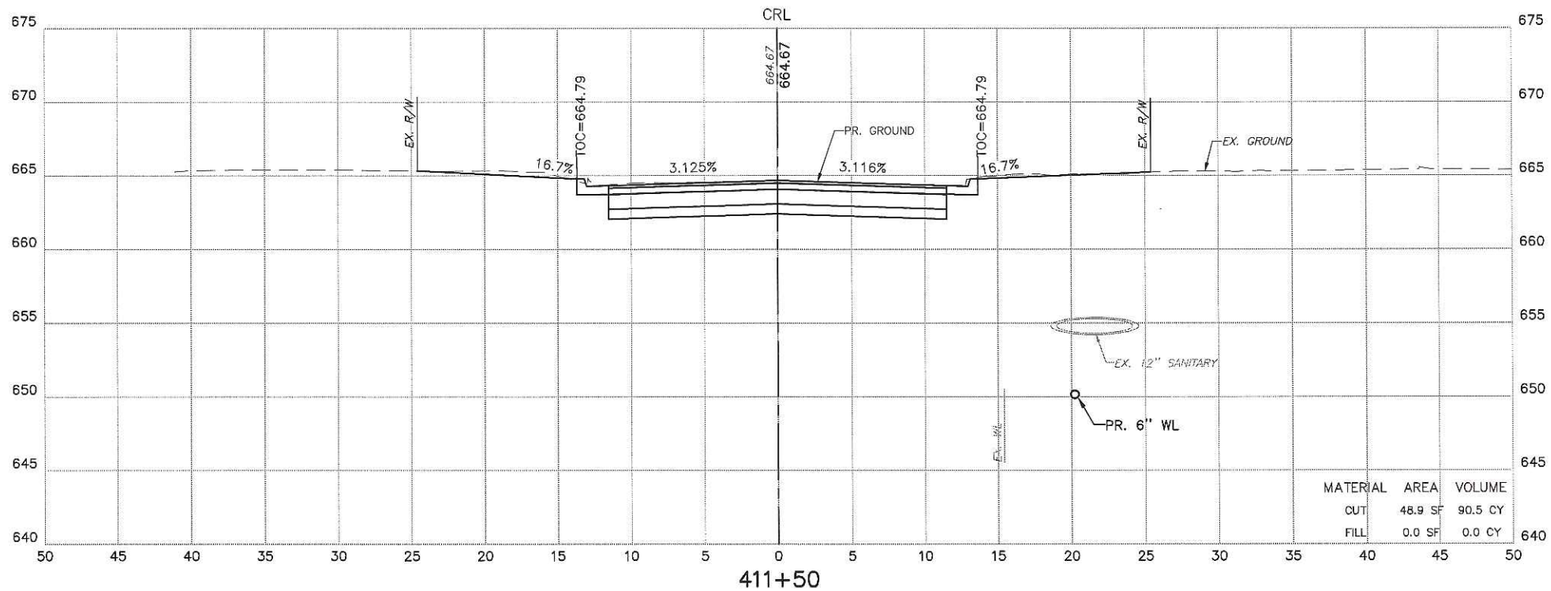

411+50

CROSS SECTIONS

PROJECT #144628-W, TMUA-W 18-16

MAINTENANCE ZONE 6028-W
TUPELO CREEK DRAINAGE

CITY OF TULSA, OKLAHOMA
ENGINEERING SERVICES DEPARTMENT

PLANS AND ESTIMATES PREPARED BY:
Meshek & Associates, L.L.C.
1437 S. Boulder Avenue, Suite 1550 Tulsa, OK 74119 (918)392-5620

REVISION	BY	DATE

PLAN SCALE	DRAWN	SCB	08/20	APPROVED:
N/A	DESIGNED	BWF	08/20	
	SURVEY	AB	08/18	
PROFILE SCALE	PROJ. MGR.			
HORIZONTAL: 1" = 5'	LEAD ENGR.			
	FIELD MGR.			
VERTICAL: 1" = 5'	RECOMMENDED			
	DESIGN MANAGER			CITY ENGINEER
FILE:	DRAWING:			DATE:
ATLAS PAGE NO. 235				SHEET 151 OF 161 SHEETS

PRINT DATE: 08/07/2020 M:\City_of_Tulsa\18TUL02_MZ6028_Tupelo_Creek_Drainage\Design\Drawings\18TUL02_X_SECTIONS_E_17TH_PL.dwg

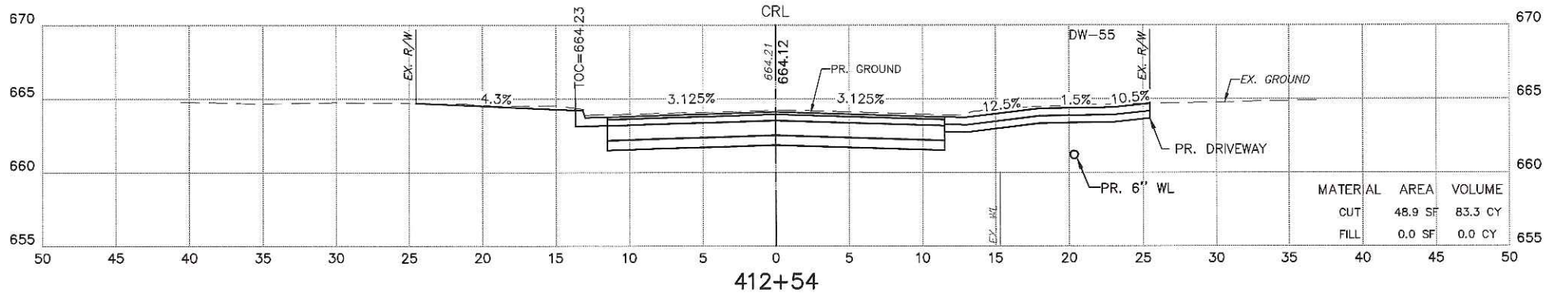

412+54

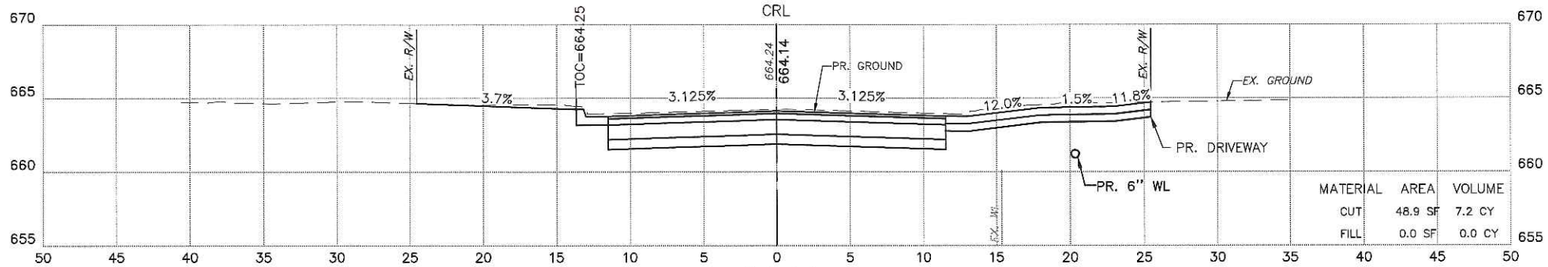

412+50

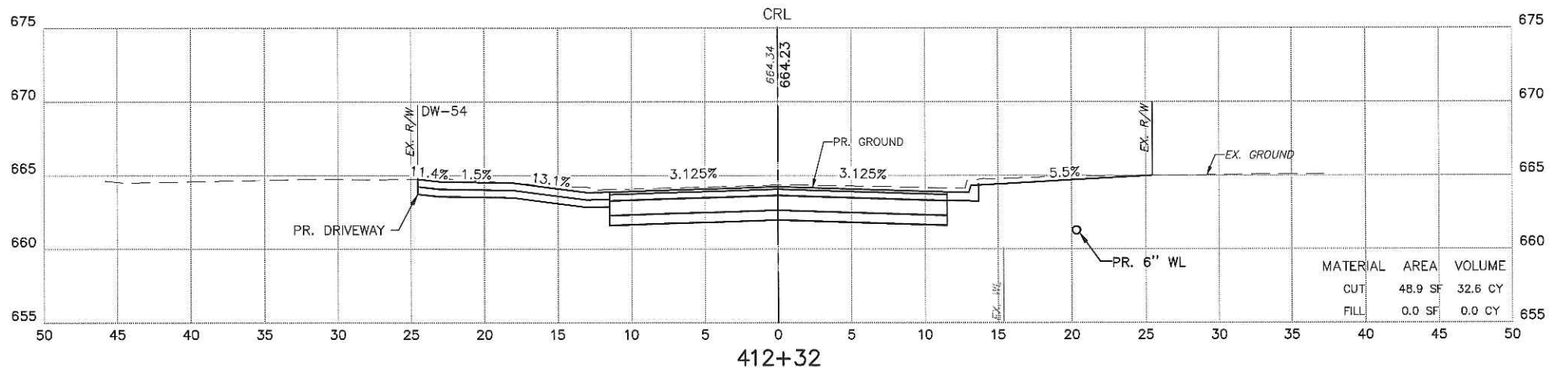

412+32

CROSS SECTIONS

PROJECT #144628-W, TMUA-W 18-16

MAINTENANCE ZONE 6028-W
TUPELO CREEK DRAINAGE

CITY OF TULSA, OKLAHOMA
ENGINEERING SERVICES DEPARTMENT

PLANS AND ESTIMATES PREPARED BY:
Meshek & Associates, L.L.C.
1437 S. Boulder Avenue, Suite 1550 Tulsa, OK 74119 (918)392-5620

REVISION	BY	DATE

PLAN SCALE: N/A
PROFILE SCALE
HORIZONTAL: 1" = 5'
VERTICAL: 1" = 5'

DRAWN	SCB	08/20	APPROVED:
DESIGNED	BWF	08/20	
SURVEY	AB	08/18	
PROJ. MGR.			
LEAD ENGR.			
FIELD MGR.			
RECOMMENDED			
DESIGN MANAGER			CITY ENGINEER
FILE: DRAWING:			DATE:
ATLAS PAGE NO. 235			SHEET 152 OF 161 SHEETS

PRINT DATE: 08/07/2020 M:\City_of_Tulsa\18TUL02_MZ6028_Tupelo_Creek_Drainage\Design\Drawings\18TUL02_X_SECTIONS_E_17TH_PL.dwg

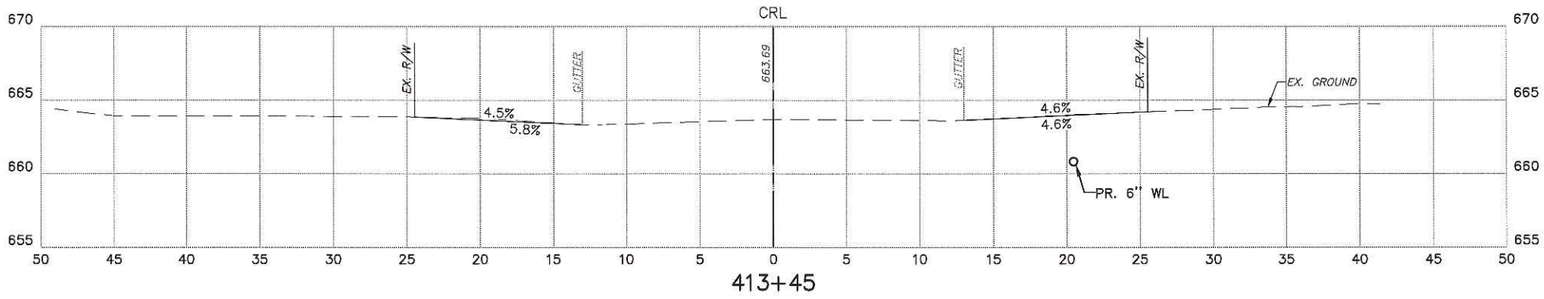

413+45

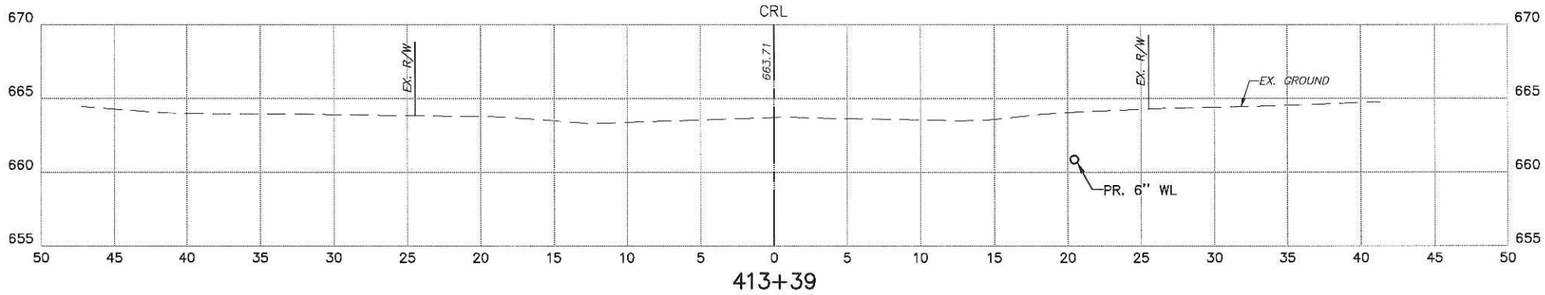

413+39

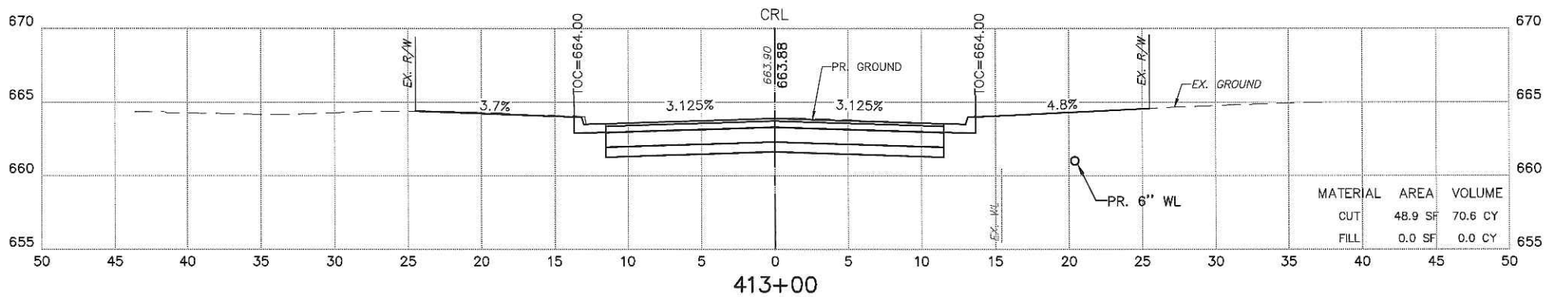

413+00

CROSS SECTIONS

PROJECT #144628-W, TMUA-W 18-16

MAINTENANCE ZONE 6028-W
TUPELO CREEK DRAINAGE

CITY OF TULSA, OKLAHOMA
ENGINEERING SERVICES DEPARTMENT

PLANS AND ESTIMATES PREPARED BY:
Meshek & Associates, L.L.C.
1437 S. Boulder Avenue, Suite 1550 Tulsa, OK 74119 (918)392-5620

REVISION	BY	DATE

PLAN SCALE	DRAWN	SCB	08/20	APPROVED:
N/A	DESIGNED	BWF	08/20	
	SURVEY	AB	08/18	
PROFILE SCALE	PROJ. MGR.			
HORIZONTAL: 1" = 5'	LEAD ENGR.			
	FIELD MGR.			
VERTICAL: 1" = 5'	RECOMMENDED DESIGN MANAGER			CITY ENGINEER
FILE:	DRAWING:			DATE:
ATLAS PAGE NO. 235				SHEET 153 OF 161 SHEETS

PRINT DATE: 08/07/2020 M:\City_of_Tulsa\18TUL02_MZ6028_Tupelo_Creek_Drainage\Design\Drawings\18TUL02_X_SECTIONS_E_17TH_PL.dwg

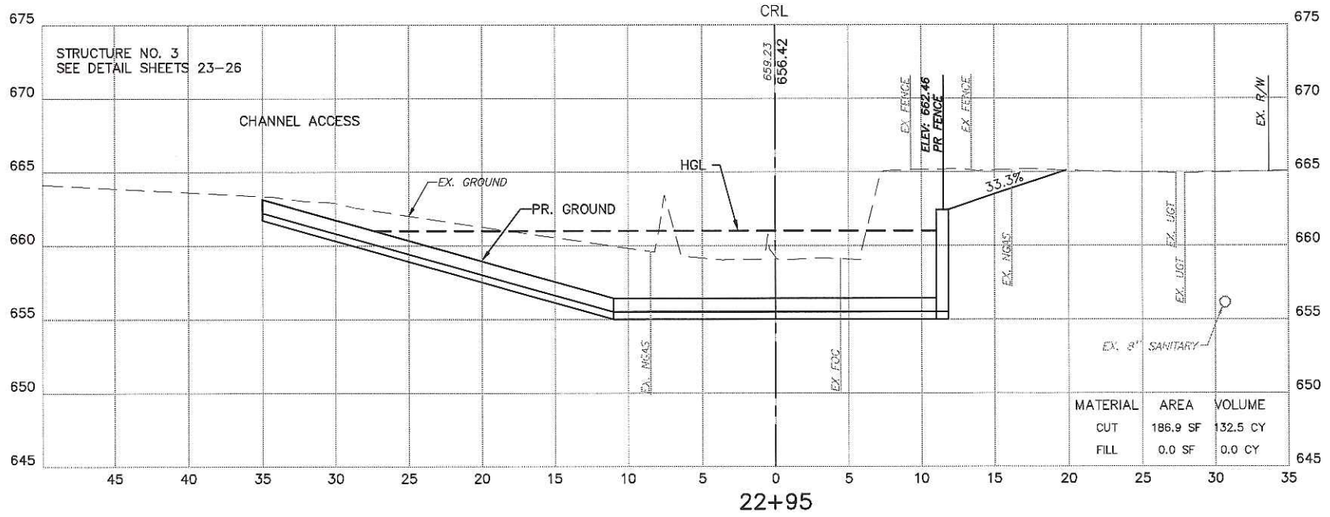

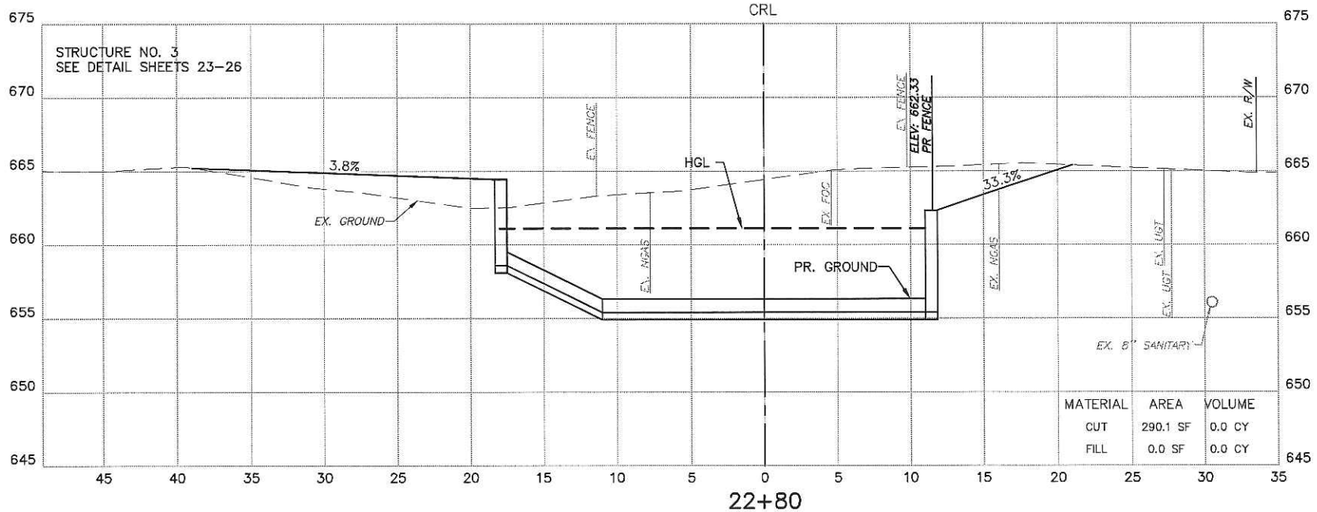

CROSS SECTIONS

PROJECT #144628–W, TMUA–W 18–16

MAINTENANCE ZONE 6028–W
TUPELO CREEK DRAINAGE

CITY OF TULSA, OKLAHOMA
ENGINEERING SERVICES DEPARTMENT

PLANS AND ESTIMATES PREPARED BY:
Meshek & Associates, L.L.C.
1437 S. Boulder Avenue, Suite 1550 Tulsa, OK 74119 (918)392–5620

REVISION	BY	DATE

PLAN SCALE	DRAWN	SCB	08/20
N/A	DESIGNED	BWF	08/20
	SURVEY	AB	08/18
PROFILE SCALE	PROJ. MGR.		
HORIZONTAL: 1" = 5'	LEAD ENGR.		
	FIELD MGR.		
VERTICAL: 1" = 5'	RECOMMENDED DESIGN MANAGER		
FILE:	DRAWING:		
ATLAS PAGE NO. 235			

APPROVED:

CITY ENGINEER

DATE:

SHEET 154 OF 161 SHEETS

PRINT DATE: 08/07/2020 M:\City_of_Tulsa\18TUL02_MZ6028_Tupelo_Creek_Drainage\Design\Drawings\18TUL02_X_SECTIONS_CHANNEL.dwg

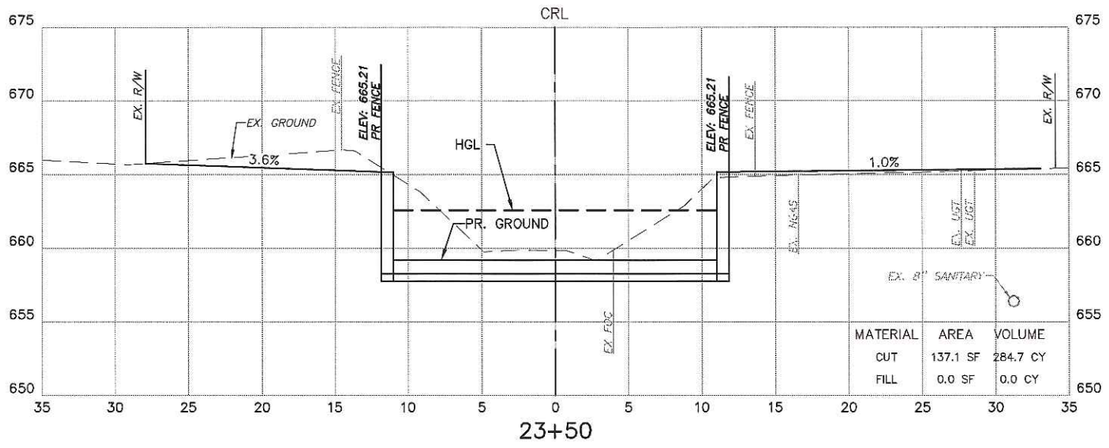

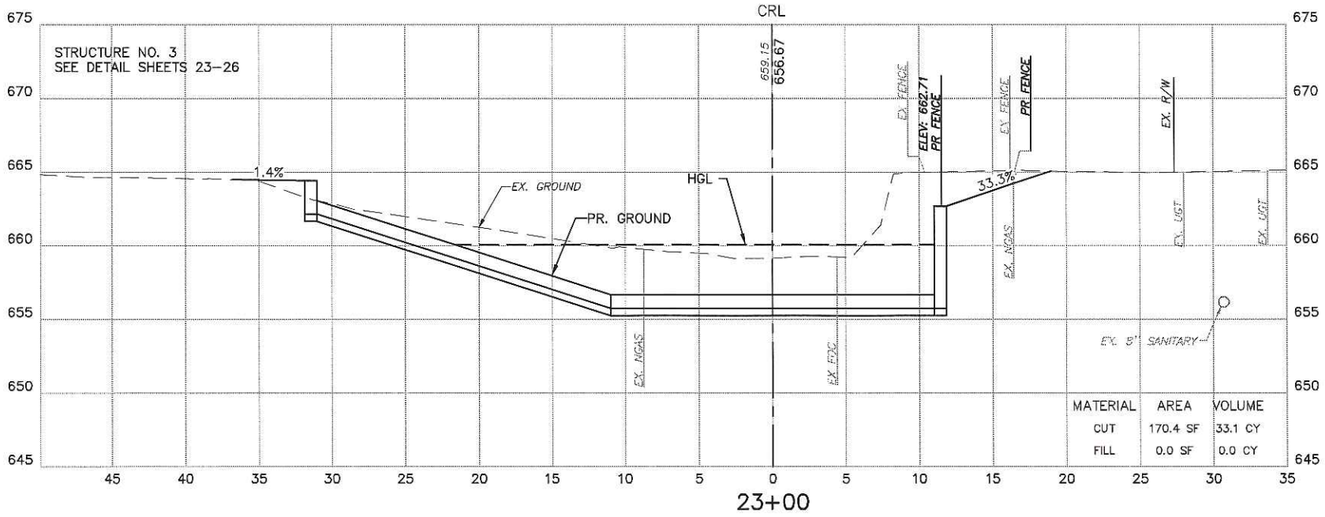

CROSS SECTIONS

PROJECT #144628-W, TMUA-W 18-16

MAINTENANCE ZONE 6028-W
TUPELO CREEK DRAINAGE

CITY OF TULSA, OKLAHOMA
ENGINEERING SERVICES DEPARTMENT

PLANS AND ESTIMATES PREPARED BY:
Meshek & Associates, L.L.C.
1437 S. Boulder Avenue, Suite 1550 Tulsa, OK 74119 (818)392-5620

REVISION	BY	DATE

PLAN SCALE	DRAWN	SCB	08/20	APPROVED:
N/A	DESIGNED	BWF	08/20	
	SURVEY	AB	08/18	
PROFILE SCALE	PROJ. MGR.			
HORIZONTAL: 1" = 5'	LEAD ENGR.			
	FIELD MGR.			
VERTICAL: 1" = 5'	RECOMMENDED DESIGN MANAGER			CITY ENGINEER
FILE:	DRAWING:			DATE:
ATLAS PAGE NO. 235				SHEET 155 OF 161 SHEETS

PRINT DATE: 08/07/2020 M:\City_of_Tulsa\18TUL02_MZ6028_Tupelo_Creek_Drainage\Design\Drawings\18TUL02_X_SECTIONS_CHANNEL.dwg

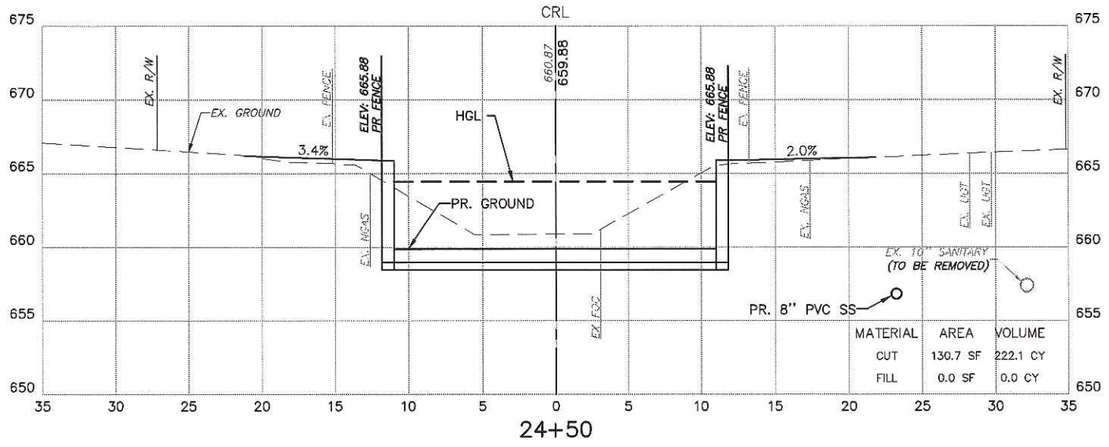

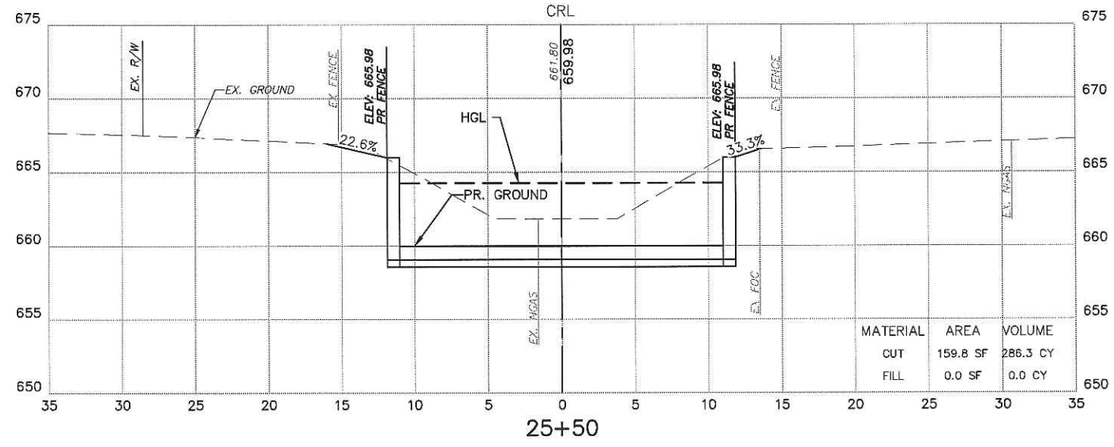

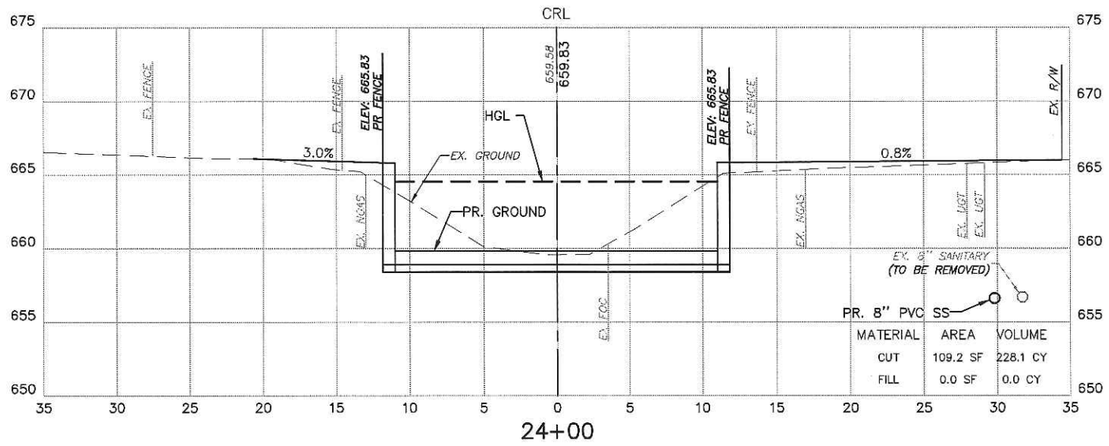

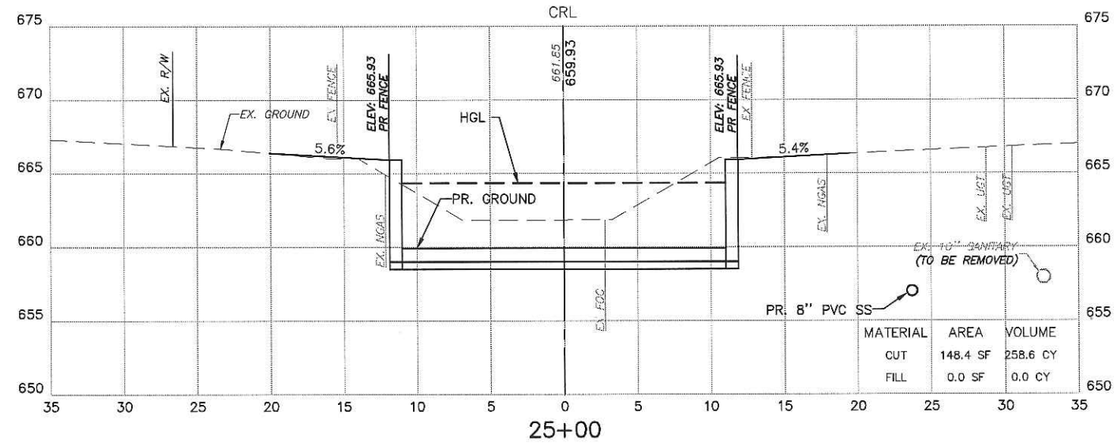

CROSS SECTIONS

PROJECT #144628-W, TMUA-W 18-16

MAINTENANCE ZONE 6028-W
TUPELO CREEK DRAINAGE

CITY OF TULSA, OKLAHOMA
ENGINEERING SERVICES DEPARTMENT

PLANS AND ESTIMATES PREPARED BY:
Meshek & Associates, L.L.C.
1437 S. Boulder Avenue, Suite 1550 Tulsa, OK 74119 (918)392-5620

REVISION	BY	DATE

PLAN SCALE	DRAWN	SCB	08/20	APPROVED:
N/A	DESIGNED	BWF	08/20	
	SURVEY	AB	08/18	
PROFILE SCALE	PROJ. MGR.			
HORIZONTAL: 1" = 5'	LEAD ENGR.			
	FIELD MGR.			
VERTICAL: 1" = 5'	RECOMMENDED			
	DESIGN MANAGER			CITY ENGINEER
FILE:	DRAWING:			DATE:
ATLAS PAGE NO. 235				SHEET 156 OF 161 SHEETS

PRINT DATE: 08/07/2020 M:\City_of_Tulsa\18TUL02_MZ6028_Tupelo_Creek_Drainage\Design\Drawings\18TUL02_X_SECTIONS_CHANNEL.dwg

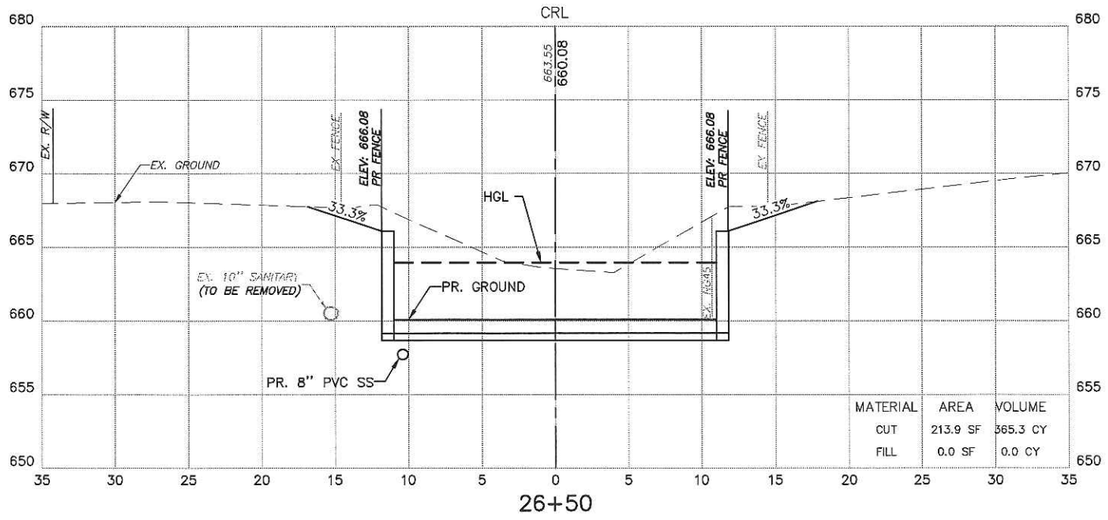

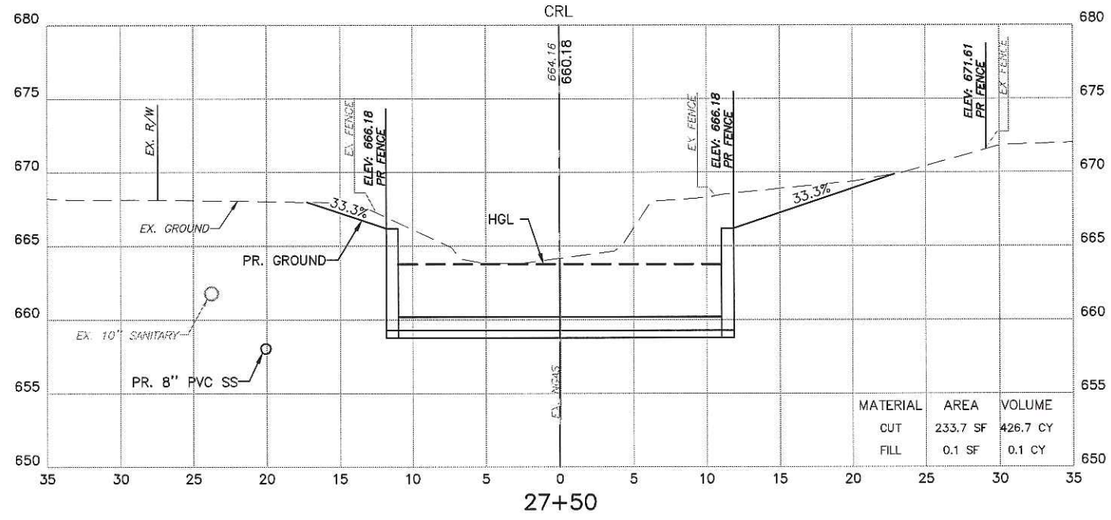

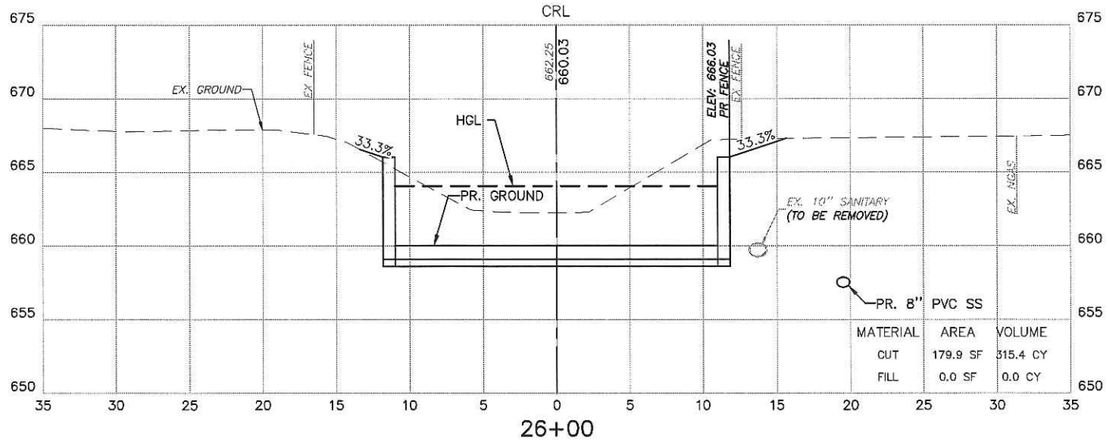

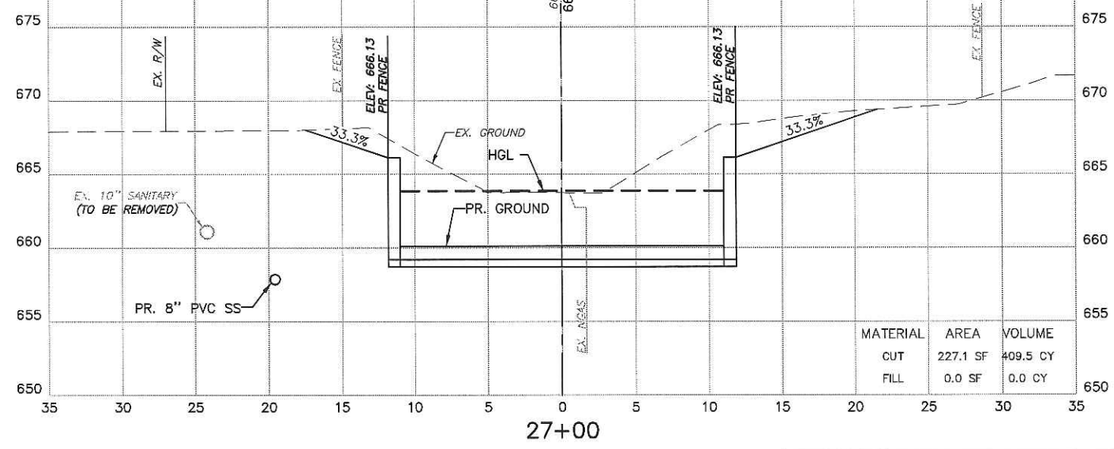

CROSS SECTIONS

PROJECT #144628-W, TMUA-W 18-16

MAINTENANCE ZONE 6028-W
TUPELO CREEK DRAINAGE

CITY OF TULSA, OKLAHOMA
ENGINEERING SERVICES DEPARTMENT

PLANS AND ESTIMATES PREPARED BY:
Meshek & Associates, L.L.C.
1437 S. Boulder Avenue, Suite 1550 Tulsa, OK 74119 (918)392-5820

REVISION	BY	DATE

PLAN SCALE	DRAWN	SCB	08/20
N/A	DESIGNED	BWF	08/20
	SURVEY	AB	08/18
PROFILE SCALE	PROJ. MGR.		
HORIZONTAL: 1" = 5'	LEAD ENGR.		
	FIELD MGR.		
VERTICAL: 1" = 5'	RECOMMENDED		
	DESIGN MANAGER		
FILE:	DRAWING:		
ATLAS PAGE NO. 235			

APPROVED:

CITY ENGINEER

DATE:

SHEET 157 OF 161 SHEETS

PRINT DATE: 08/07/2020 M:\City_of_Tulsa\18TUL02_MZ6028_Tupelo_Creek_Drainage\Design\Drawings\18TUL02_X_SECTIONS_CHANNEL.dwg

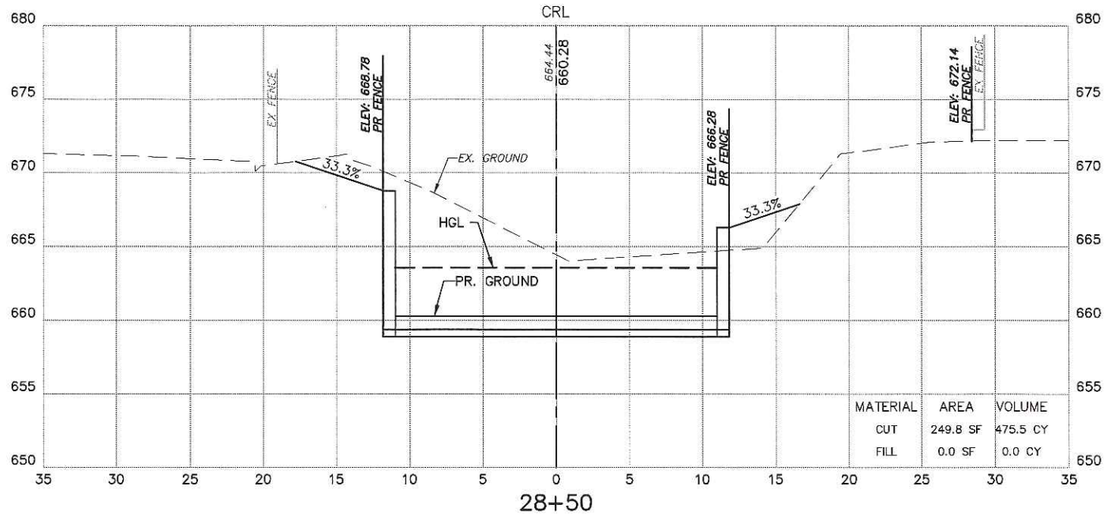

28+50

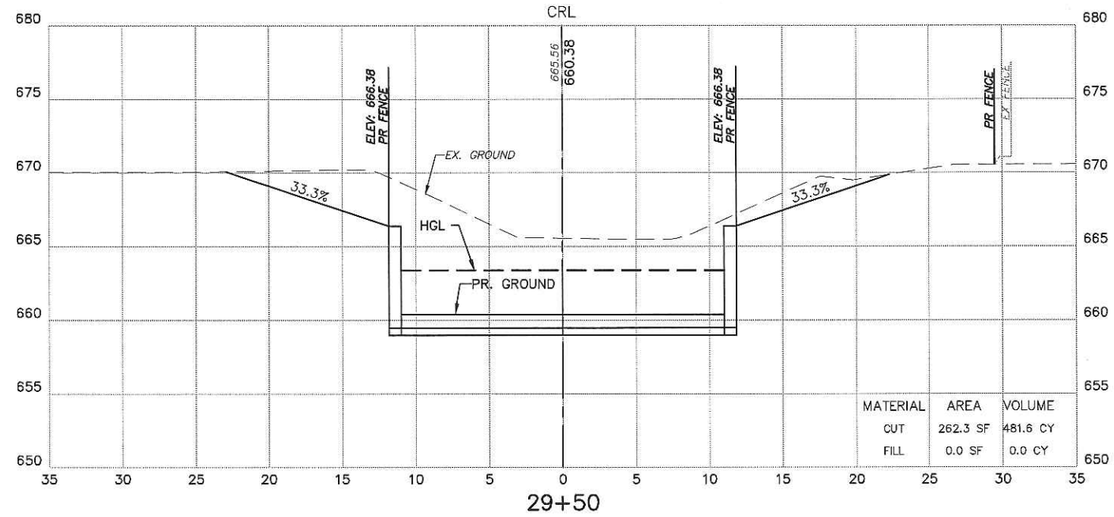

29+50

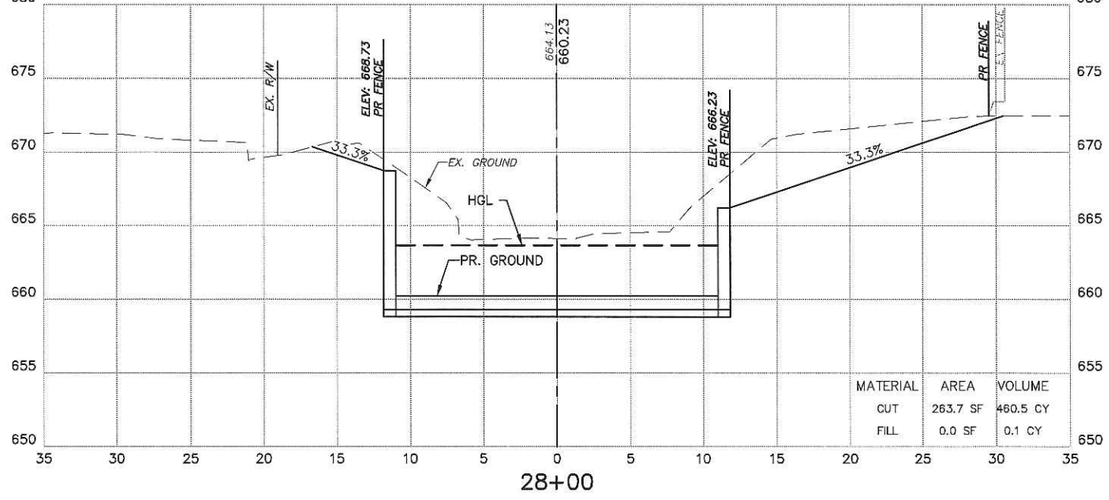

28+00

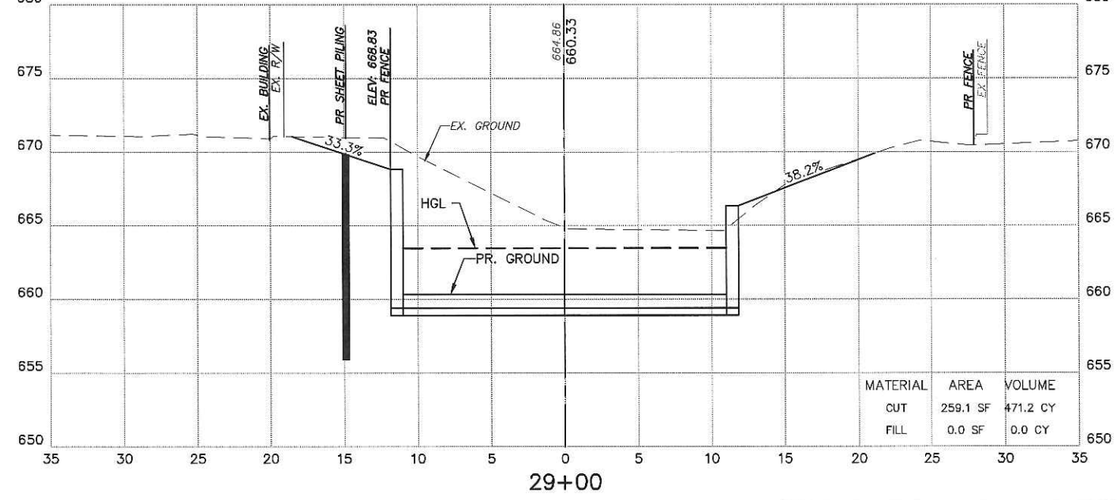

29+00

CROSS SECTIONS

PROJECT #144628-W, TMUA-W 18-16

MAINTENANCE ZONE 6028-W
TUPELO CREEK DRAINAGE

CITY OF TULSA, OKLAHOMA
ENGINEERING SERVICES DEPARTMENT

PLANS AND ESTIMATES PREPARED BY:
Meshek & Associates, L.L.C.
1437 S. Boulder Avenue, Suite 1550 Tulsa, OK 74119 (918)392-5620

REVISION	BY	DATE

PLAN SCALE	DRAWN	SCB	08/20
N/A	DESIGNED	BWF	08/20
	SURVEY	AB	08/18
PROFILE SCALE	PROJ. MGR.		
HORIZONTAL: 1" = 5'	LEAD ENGR.		
	FIELD MGR.		
VERTICAL: 1" = 5'	RECOMMENDED		
	DESIGN MANAGER		
FILE:	DRAWING:		
ATLAS PAGE NO. 235			

APPROVED:

CITY ENGINEER

DATE:

SHEET 15B OF 161 SHEETS

PRINT DATE: 08/07/2020 M:\City_of_Tulsa\18TUL02_MZ6028_Tupelo_Creek_Drainage\Design\Drawings\18TUL02_X_SECTIONS_CHANNEL.dwg

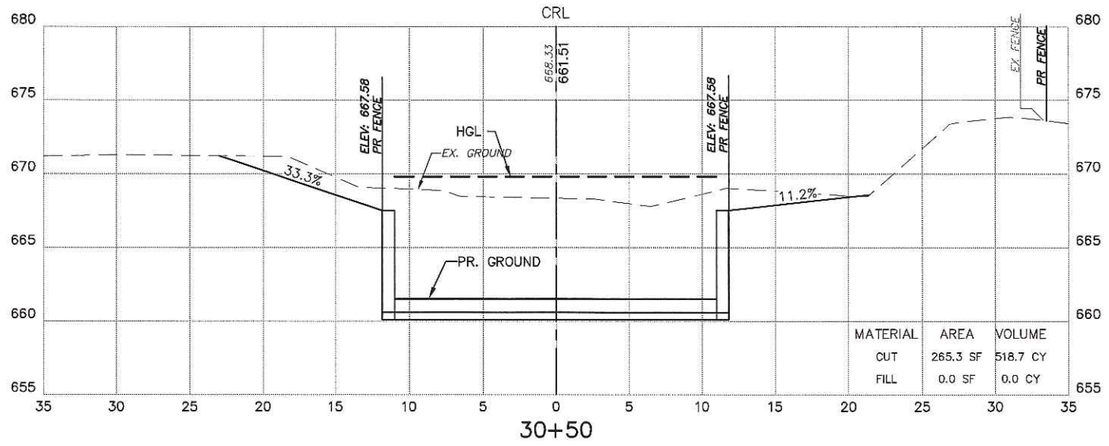

30+50

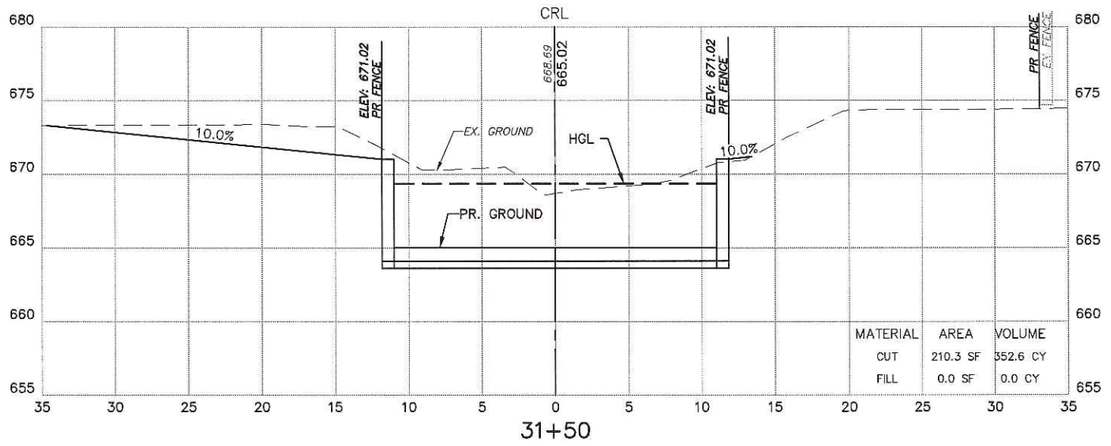

31+50

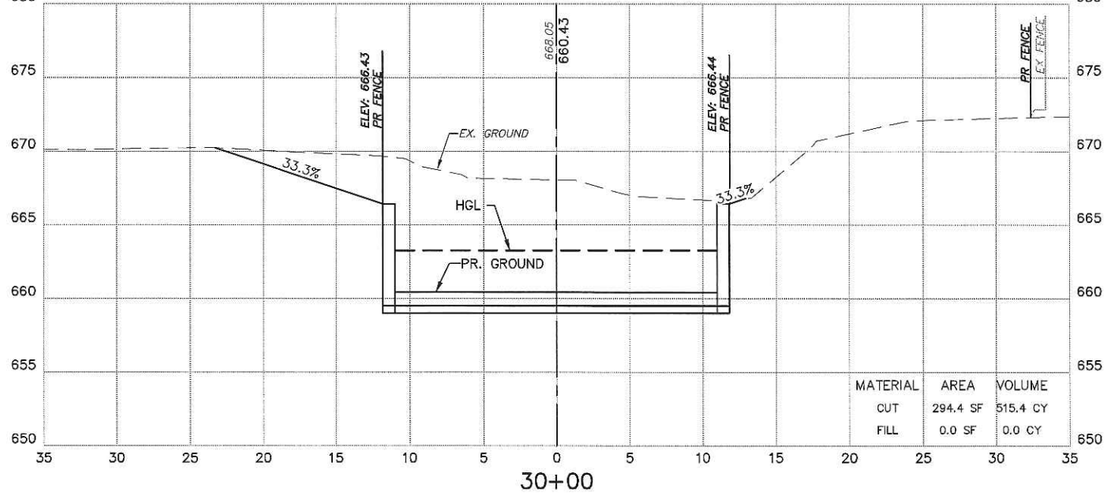

30+00

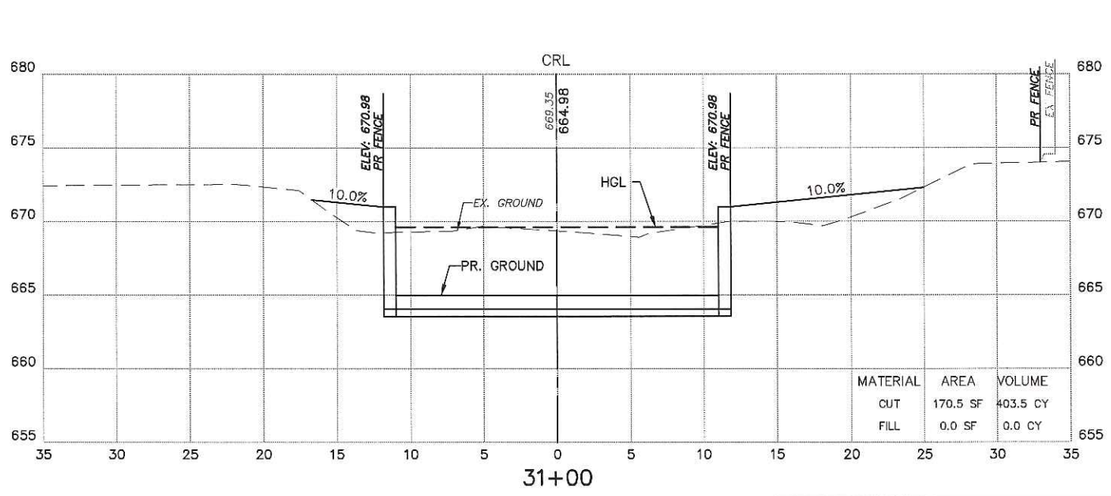

31+00

CROSS SECTIONS

PROJECT #144628-W, TMUA-W 18-16

MAINTENANCE ZONE 6028-W
TUPELO CREEK DRAINAGE

CITY OF TULSA, OKLAHOMA
ENGINEERING SERVICES DEPARTMENT

PLANS AND ESTIMATES PREPARED BY:
Meshek & Associates, L.L.C.
1437 S. Boulder Avenue, Suite 1550 Tulsa, OK 74119 (918)392-5620

REVISION	BY	DATE

PLAN SCALE: N/A
PROFILE SCALE: HORIZONTAL: 1" = 5' VERTICAL: 1" = 5'

DRAWN	SCB	08/20	APPROVED:
DESIGNED	BWF	08/20	
SURVEY	AB	08/18	
PROJ. MGR.			
LEAD ENGR.			
FIELD MGR.			
RECOMMENDED			
DESIGN MANAGER			CITY ENGINEER
FILE:	DRAWING:		DATE:
ATLAS PAGE NO. 235			SHEET 159 OF 161 SHEETS

PRINT DATE: 08/07/2020 M:\City_of_Tulsa\18TUL02_MZ6028_Tupelo_Creek_Drainage\Design\Drawings\18TUL02_X_SECTIONS_CHANNEL.dwg

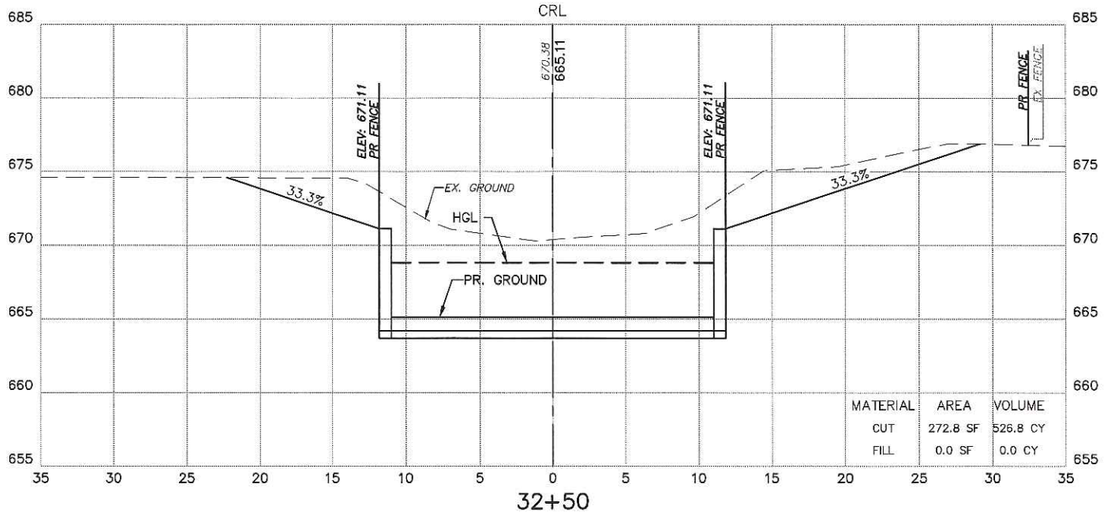

32+50

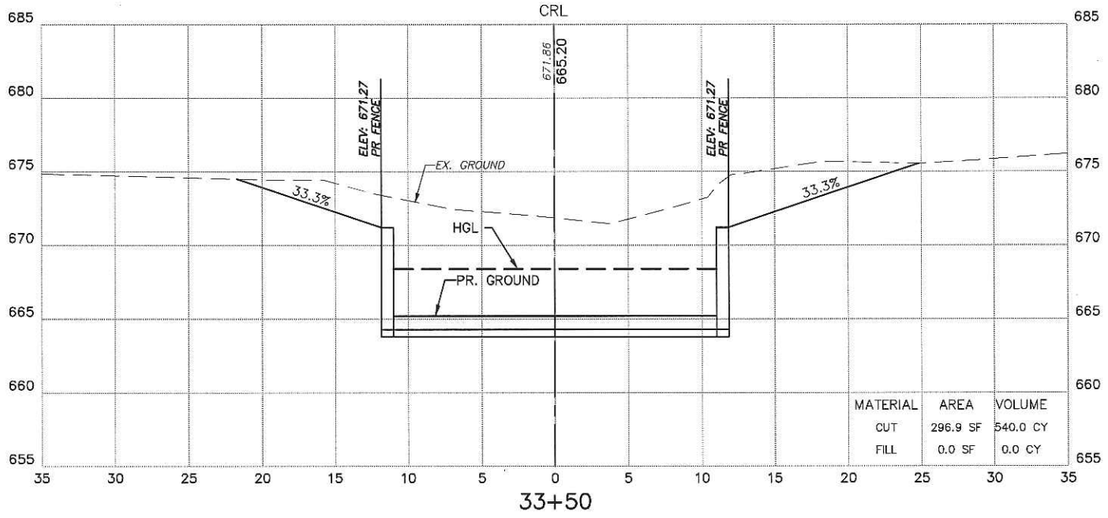

33+50

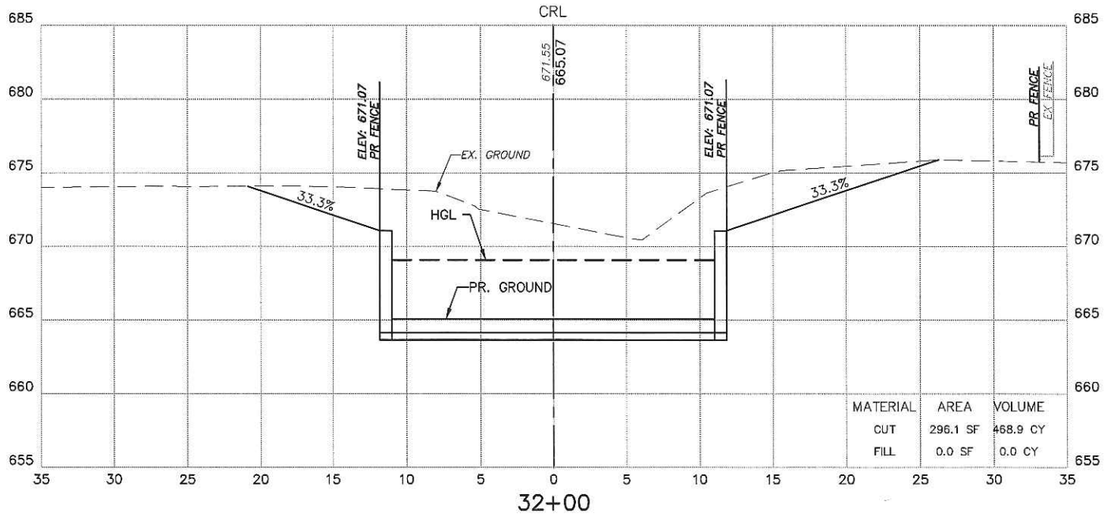

32+00

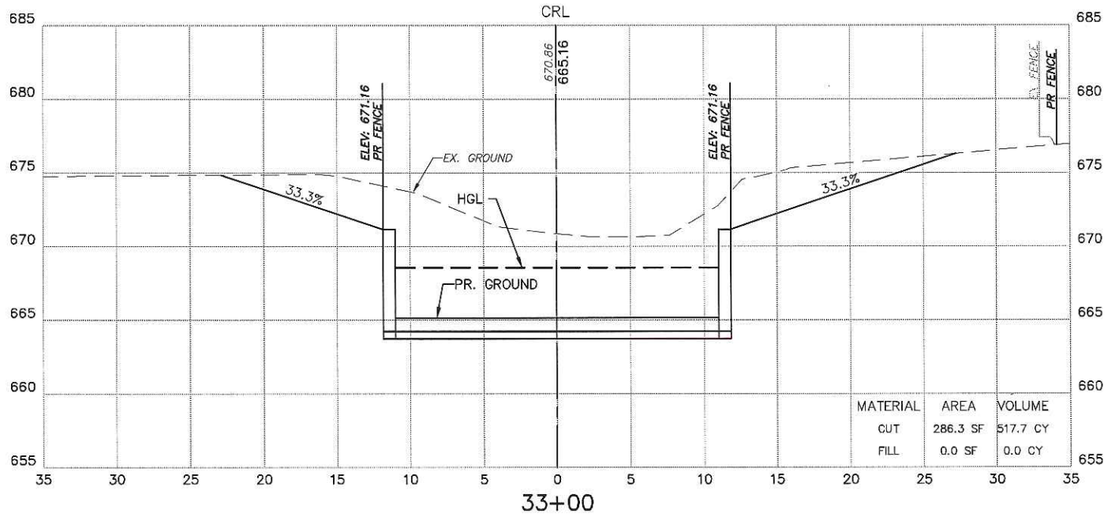

33+00

CROSS SECTIONS

PROJECT #144628-W, TMUA-W 18-16

MAINTENANCE ZONE 6028-W
TUPELO CREEK DRAINAGE

CITY OF TULSA, OKLAHOMA
ENGINEERING SERVICES DEPARTMENT

PLANS AND ESTIMATES PREPARED BY:
Meshek & Associates, L.L.C.
1437 S. Boulder Avenue, Suite 1550 Tulsa, OK 74119 (918)392-5620

REVISION	BY	DATE

PLAN SCALE	DRAWN	SCB	08/20
N/A	DESIGNED	BWF	08/20
	SURVEY	AB	08/18
PROFILE SCALE	PROJ. MGR.		
HORIZONTAL: 1" = 5'	LEAD ENGR.		
	FIELD MGR.		
VERTICAL: 1" = 5'	RECOMMENDED		
	DESIGN MANAGER		
FILE:	DRAWING:		
ATLAS PAGE NO. 235			

APPROVED:

CITY ENGINEER

DATE:

SHEET 160 OF 161 SHEETS

PRINT DATE: 08/07/2020 M:\City_of_Tulsa\18TUL02_MZ6028_Tupelo_Creek_Drainage\Design\Drawings\18TUL02_X_SECTIONS_CHANNEL.dwg

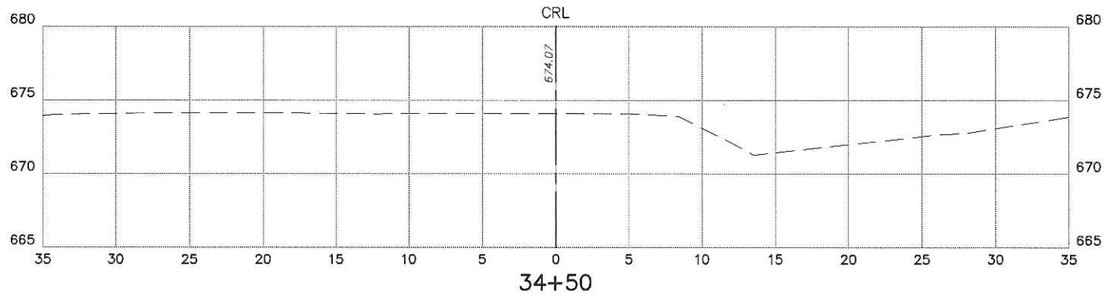

34+50

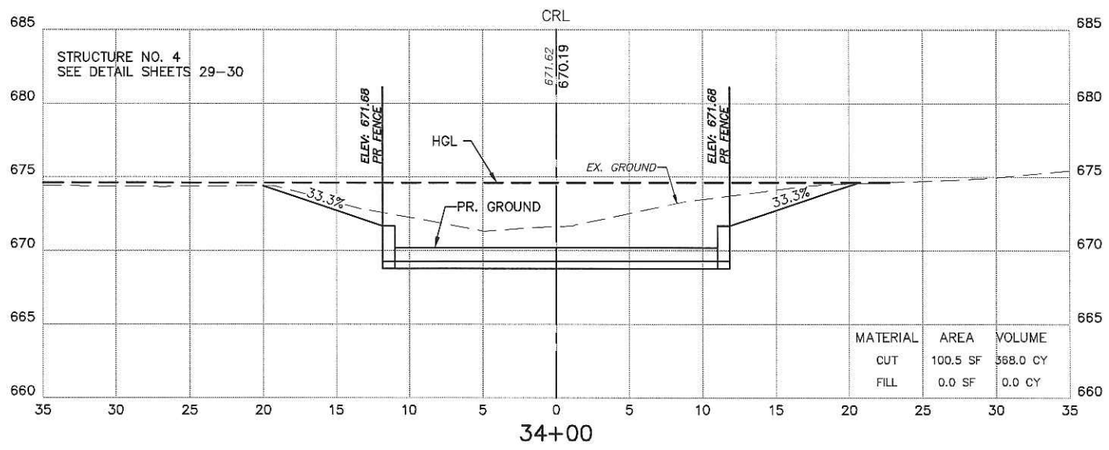

34+00

PRINT DATE: 08/07/2020 M:\City_of_Tulsa\18TUL02_MZ6028_Tupelo_Creek_Drainage\Design\Drawings\18TUL02_X_SECTIONS_CHANNEL.dwg

CROSS SECTIONS

PROJECT #144628–W, TMUA–W 18–16

MAINTENANCE ZONE 6028–W
TUPELO CREEK DRAINAGE

CITY OF TULSA, OKLAHOMA
ENGINEERING SERVICES DEPARTMENT

PLANS AND ESTIMATES PREPARED BY:
Meshek & Associates, L.L.C.
1437 S. Boulder Avenue, Suite 1550 Tulsa, OK 74119 (918)392–5620

REVISION	BY	DATE

PLAN SCALE	DRAWN	SCB	08/20	APPROVED:
N/A	DESIGNED	BWF	08/20	
	SURVEY	AB	08/18	
PROFILE SCALE	PROJ. MGR.			
HORIZONTAL: 1" = 5'	LEAD ENGR.			
	FIELD MGR.			
VERTICAL: 1" = 5'	RECOMMENDED DESIGN MANAGER			CITY ENGINEER
FILE:	DRAWING:			DATE:
ATLAS PAGE NO. 235				SHEET 161 OF 161 SHEETS