CONSTRUCTION PLANS FOR
A.B. JEWELL WTP RESIDUALS IMPROVEMENTS PHASE 2
PROJECT NO. TMUA-W 24-05
WATER AND SEWER DEPARTMENT
CITY OF TULSA, OKLAHOMA

PLANS PREPARED BY

Jacobs

401 S. BOSTON STE 330
TULSA, OK 74103
(918) 583-3057

CERTIFICATE OF AUTHORIZATION #1435
EXPIRATION DATE: 06/30/2027

OKIE811 Know what's below 811 before you dig.

ENGINEER'S STATEMENT:

1. CURRENT CITY OF TULSA STANDARD SPECIFICATIONS AND STANDARD DETAILS GOVERN. ALL OTHER CONSTRUCTION AND MATERIALS SHALL BE IN ACCORDANCE WITH THE 2019 OKLAHOMA STANDARD SPECIFICATIONS FOR HIGHWAY CONSTRUCTION.
2. ENTIRE PROJECT IS WITHIN CORPORATE LIMITS OF CITY OF TULSA (COT).
3. THIS PROJECT COMPLIES WITH ALL OKLAHOMA DEPARTMENT OF ENVIRONMENTAL QUALITY (ODEQ) REQUIREMENTS.

UTILITY COORDINATION INFORMATION INSIDE OF RIGHT OF WAY		
COMPANY	CONTACT	OFFICE
City of Tulsa	Tony Glenn	918-596-9245
AEP/PSO	Emergency	888-216-3523
ONG	Emergency	800-664-5463
AT&T	Emergency	800-288-2020
Cox	Customer Service	918-806-6000
Verizon	Customer Service	888-294-6804
Windstream	Customer Service	800-347-1991
MTTA	Customer Service	918-830-0024

UTILITY COORDINATION INFORMATION TULSA ENGINEERING SERVICES DEPARTMENT	
WATER DESIGN	918-596-9580
WASTEWATER DESIGN	918-596-9564
TRANSPORTATION DESIGN	918-596-9636
TRAFFIC ENGINEERING DESIGN	918-596-9741
STORMWATER DESIGN	918-596-9498

SURVEY DATUM:
HORIZONTAL - OKLAHOMA STATE PLANE COORDINATE (NAD 1983)
VERTICAL - (NAVD 1988)

PROJECT LOCATION

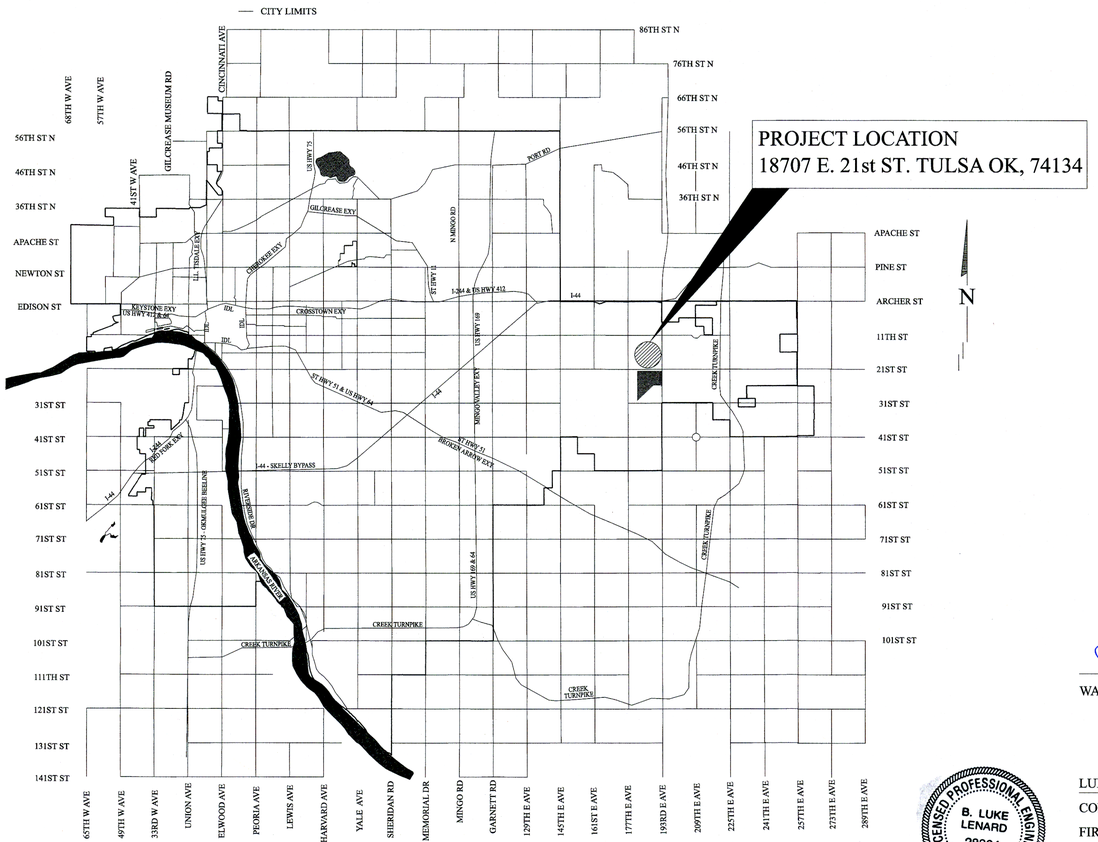

INDEX TO DRAWINGS

SHEET NO.	DWG NO.	DESCRIPTION
1	G-1	GENERAL COVER SHEET AND LOCATION MAP
2	G-2	GENERAL LEGEND AND NOTES
3	G-3	GENERAL ABBREVIATIONS
4	G-4	GENERAL CIVIL AND YARD PIPING LEGEND
5	G-5	GENERAL ARCHITECTURAL NOTES AND LEGEND
6	G-6	GENERAL STRUCTURAL NOTES 1
7	G-7	GENERAL STRUCTURAL NOTES 2
8	G-8	GENERAL STATEMENT OF SPECIAL INSPECTIONS 1
9	G-9	GENERAL STATEMENT OF SPECIAL INSPECTIONS 2
10	G-10	GENERAL PROCESS MECHANICAL LEGEND
11	G-11	GENERAL A.B. JEWELL WTP PROCESS FLOW DIAGRAM
12	G-12	GENERAL ELECTRICAL LEGEND 1
13	G-13	GENERAL ELECTRICAL LEGEND 2
14	G-14	GENERAL INSTRUMENTATION AND CONTROL LEGEND 1
15	G-15	GENERAL INSTRUMENTATION AND CONTROL LEGEND 2
16	G-16	GENERAL LUCITY EQUIPMENT TABLE
17	C-1	CIVIL STORMWATER MANAGEMENT PLAN
18	C-2	CIVIL SITE PLAN
19	C-3	CIVIL EROSION AND SEDIMENT CONTROL PLAN
20	C-4	CIVIL EROSION AND SEDIMENT CONTROL PLAN
21	C-5	CIVIL PAVEMENT PLAN
22	C-6	CIVIL STANDARD DETAILS
23	Y-1	YARD PIPING PLAN VIEWS 1 OF 3
24	Y-2	YARD PIPING PLAN VIEWS 2 OF 3
25	Y-3	YARD PIPING PLAN VIEWS 3 OF 3
26	Y-4	YARD PIPING RESIDUALS BLEND TANK PROFILE
27	Y-5	YARD PIPING DETAILS
28	D-1	DEMOLITION DEWATERING BUILDING FLOOR PLAN
29	D-2	DEMOLITION VIEWS 1 OF 4
30	D-3	DEMOLITION VIEWS 2 OF 4
31	D-4	DEMOLITION VIEWS 3 OF 4
32	D-5	DEMOLITION VIEWS 4 OF 4
33	M-1	PROCESS MECHANICAL DEWATERING BUILDING FLOOR PLAN
34	M-2	PROCESS MECHANICAL DEWATERING BUILDING OVERALL PLAN
35	M-3	PROCESS MECHANICAL DEWATERING BUILDING SECTIONS
36	M-4	PROCESS MECHANICAL ANIONIC & CATIONIC POLYMER BLEND UNIT SECTIONS
37	M-5	PROCESS MECHANICAL DETAILS
38	SM-1	STRUCTURAL/MECHANICAL RESIDUALS BLEND TANK PLAN
39	SM-2	STRUCTURAL/MECHANICAL RESIDUALS BLEND TANK PLAN, SECTION AND DETAILS
40	S-1	STRUCTURAL CMU WALL DETAILS
41	E-1	ELECTRICAL DEWATERING BUILDING OVERALL FLOOR PLAN
42	E-2	ELECTRICAL ONE LINE DIAGRAM AND CABLE BLOCK DIAGRAM
43	I-1	INSTRUMENTATION AND CONTROLS RESIDUALS BLEND TANK P&ID
44	I-2	I&C BELT FILTER PRESS P&ID
45	I-3	I&C DRY POLYMER FEED SYSTEM P&ID
46	I-4	I&C POLYMER TANK LEVEL P&ID
47	I-5	I&C MISC. UTILITIES P&ID

CITY OF TULSA STANDARD DETAILS

305 - TRENCH & BEDDING DETAIL (NON PAVED AREAS) - FLEXIBLE PIPE
309 - FIRE HYDRANT
313A - VALVE BOX
315 - CONCRETE CRADLES, ENCASEMENTS, & THRUST BLOCKS

CITY OF TULSA

APPROVED BY

WATER AND SEWER DIRECTOR — DATE 7.21.2026

LICENSED PROFESSIONAL ENGINEER B. LUKE LENARD 28364 OKLAHOMA 5/11/26

LUKE LENARD, JACOBS ENGINEERING GROUP INC. — MAY 11, 2026
CONSULTANT NAME AND FIRM NAME — DATE

ISSUED FOR BID

PATHNAME: 001-G-0001_D3910200.dgn PLOT DATE: 05\06\2026 PLOT TIME: 12:00:47 PM

SUMMARY OF WORK:

THE COMPLETED WORK WILL PROVIDE OWNER WITH RESIDUALS HANDLING IMPROVEMENTS AT THE A. B. JEWELL WATER TREATMENT PLANT. SUGGESTED SEQUENCE OF WORK AND WORK CONSTRAINTS ARE FURTHER DESCRIBED IN SPECIFICATION 01 31 13. THE PROJECT INCLUDES BUT IT IS NOT LIMITED TO:

1. INSTALLATION OF A NEW DECANT PIPE ON THE EXISTING BLEND TANK.
2. REFURBISHMENT OF THREE BELT FILTER PRESSES.
3. DEMOLITION AND INSTALLATION OF TWO DRY POLYMER MIXING SYSTEMS.
4. DEMOLITION AND INSTALLATION OF ONE RESIDUALS CONVEYOR SYSTEM.
5. DEMOLITION AND RESURFACING OF THE RESIDUALS HOLDING AREA.
6. INSTALLATION OF A LAGOON WATER LINE.
7. INSTALLATION AND REMOVAL OF A TEMPORARY MOBILE BELT FILTER PRESS.
8. THE CONTRACTOR SHALL FURNISH AND INSTALL A TELESCOPING DECANTING VALVE TO FACILITATE THE CONTROLLED DISCHARGE OF SUPERNATANT FROM THE BLEND TANK TO THE LOWER LAGOON. INSTALLATION SHALL INCLUDE ALL NECESSARY MODIFICATIONS TO THE EXISTING BLEND TANK, INCLUDING STRUCTURAL PENETRATION AS REQUIRED. THE CONTRACTOR WILL BE REQUIRED TO LOCATE REINFORCING WITHIN THE STRUCTURAL WALLS OF THE BLEND TANK, PROVIDE RESULTS TO THE STRUCTURAL ENGINEER, AND PROVIDE A PLAN PRIOR TO CORING. THE INSTALLATION OF THE CONNECTING PIPE SHALL BE COMPLETED IN ACCORDANCE WITH PROJECT SPECIFICATIONS AND WILL REQUIRE IDENTIFICATION AND COORDINATION OF EXISTING SITE UTILITIES, INCLUDING BUT NOT LIMITED TO ELECTRICAL SYSTEMS, STORAGE TANKS, COMMUNICATION LINES, AND THE DESIGNATED PIPE TIE-IN LOCATION. THE CONTRACTOR SHALL TAKE ALL NECESSARY PRECAUTIONS TO PREVENT DISRUPTIONS TO EXISTING INFRASTRUCTURE AND ENSURE COMPLIANCE WITH APPLICABLE REGULATIONS. THE EXISTING INFORMATION PRESENTED WITHIN THESE DESIGN DOCUMENTS HAS BEEN TAKEN FROM AS-BUILT INFORMATION. THE OWNER SHALL BE RESPONSIBLE FOR BLEND TANK DRAINING AND CLEANING PRIOR TO WORK. OWNER SHALL BE RESPONSIBLE FOR RESEEDING DISTURBED AREAS DIRECTLY IMPACTED BY THE SCOPE OF WORK FOR THIS PROJECT.

SUMMARY OF CONTRACT QUANTITIES

ITEM NO.	SPEC/DWG NO.	DESCRIPTION	UNIT	QTY
1	01 29 00	MOBILIZATION	LS	1
2	01 57 13	TEMPORARY EROSION AND SEDIMENT CONTROL	EA	1
3	01 50 00	TRAFFIC CONTROL	EA	1
4	02 41 00	DEMOLITION	EA	1
5	44 46 16	BELT FILTER PRESS REHABILITATION COMPLETE, IN PLACE	EA	1
6	01 50 00	BELT FILTER PRESS- TEMPORARY DEWATERING UNIT COMPLETE, IN PLACE	EA	1
7	44 46 13.01	CONVEYOR SYSTEM COMPLETE, IN PLACE	EA	1
8	44 44 63.02	POLYMER SYSTEM COMPLETE, IN PLACE	EA	1
9	SM-1 SM-2 Y-4	RESIDUALS BLEND TANK MODIFICATIONS COMPLETE, IN PLACE	EA	1
10	33 05 01	LOWER LAGOON- EXCAVATION	CY	811
11	33 03 01, 31 23 23.15	LOWER LAGOON- BEDDING	CY	299
12	33 03 01, 31 23 23.15	LOWER LAGOON- BACKFILL	CY	513
13	02 41 00	LOWER LAGOON- HAUL OFF, INCLUDING SWELL	CY	344
14	33 03 01, 31 23 23.15	LOWER LAGOON- TRENCH SAFETY	LS	1
15	33 05 01, 33 05 01.09	LOWER LAGOON- 10 INCH PVC, AWWA C900, DR14	LF	909
16	33 05 01, 33 05 01.09	LOWER LAGOON- 10 INCH PVC, AWWA C900, DR14 (RJ)	LF	312
17	40 27 01 Y-1	LOWER LAGOON- CONNECT TO EXISTING 24 INCH	EA	1
18	33 05 01, 33 05 01.09	LOWER LAGOON- 10 INCH 45 DEG DI (RJ)	EA	8
19	40 27 00	LOWER LAGOON- THRUST BLOCK	EA	8
20	COT 305	LOWER LAGOON- WATER LOCATOR BALLS	EA	1
21	33 05 01, 33 05 01.09	LOWER LAGOON- 10 INCH X 6" DI TEE	EA	7
22	40 27 02	LOWER LAGOON- 6 INCH GATE VALVE DI (RJ)	EA	7
23	33 12 19, COT 309	LOWER LAGOON- HYDRANT ASSEMBLY COMPLETE, IN PLACE	EA	7
24	33 05 01.09, 33 13 00	LOWER LAGOON- PIPE TESTING/FLUSHING/DISINFECTION	LF	1330
25	01 29 00	OWNER'S ALLOWANCE	ALLOW	10,000
26	01 29 00	CONSTRUCTION AS-BUILTS	LS	1
27	C-4	ADD ALTERNATE 1- FULL RESIDUALS STORAGE AREA PAVING	SF	10,977
28	C-4	ADD ALTERNATE 2- PARTIAL RESIDUALS STORAGE AREA PAVING	SF	4,307
29	40 90 01	ADD ALTERNATE 3- INSTRUMENTATION & CONTROLS COMPLETE, IN PLACE	LS	1

GENERAL NOTES:

1. FACILITIES ARE SHOWN HEAVY LINED. SCREENING IS USED IN ORDER TO CLARIFY DRAWINGS. FOR EXAMPLE, STRUCTURES ARE SCREENED ON MECHANICAL DRAWINGS TO HIGH-LIGHT PIPING AND EQUIPMENT.
2. DEMOLITION WORK IS SHOWN AS CROSS HATCHED.
3. REPETITIVE FEATURES ARE NOT DRAWN IN THEIR ENTIRETY AND SHALL BE COMPLETELY PROVIDED AS IF DRAWN IN FULL.
4. LINE OF EXISTING GRADES, AS SHOWN ON THE BUILDING ELEVATIONS AND SECTIONS ARE APPROXIMATE. THEY ARE AT THE BUILDING FACE, OR ON THE SECTION END EXCEPT AS NOTED.
5. REFER TO STRUCTURAL, MECHANICAL, ELECTRICAL AND OTHER CATEGORIES OF DRAWINGS FOR ADDITIONAL NOTES.
6. VERIFY ALL DIMENSIONS AND LOCATIONS, AND FURNISH ALL NECESSARY COMPONENTS INCLUDING PENETRATIONS TROUGH FLOORS AND WALLS, ACCESS DOORS, FURRING, CURBS, ANCHORS, AND INSERTS. ENSURE THE PROVISION OF BASES AND BLOCKING REQUIRED TO SUPPORT ACCESSORIES, MECHANICAL SYSTEMS, ELECTRICAL EQUIPMENT, AND ANY OTHER SPECIFIED INSTALLATIONS.
7. SOURCE OF TOPOGRAPHY SHOWN ON THE CIVIL PLANS ARE BASE MAPS PROVIDED BY MESHEK ASSOCIATES, LLC PERFORMED SEPTEMBER 2025. EXISTING CONDITIONS MAY VARY FROM THOSE SHOWN IN ON THESE PLANS. THE CONTRACTOR SHALL VERIFY EXISTING CONDITIONS AND ADJUST WORK PLAN ACCORDINGLY PRIOR TO BEGINNING CONSTRUCTION.
8. HORIZONTAL DATUM: DATA SHALL BE REPORTED AS NORTH AMERICAN DATUM OF 1983 (NAD 83), CURRENT ADJUSTMENT, STATE PLANE COORDINATES FOR OKLAHOMA, US FOOT.
9. VERTICAL DATUM: NORTH AMERICAN VERTICAL DATUM OF 1988 (NAVD 88), CURRENT ADJUSTMENT.

GENERAL CONSTRUCTION NOTES:

1. BURIED BOLTS, HARNESS LUGS, AND COUPLINGS SHALL BE GIVEN TWO COATS OF KOPPER'S BITUMASTIC 00-M (DRY MIL THICKNESS OF 16 MILS) OR EQUAL. COST TO BE INCLUDED IN UNIT PRICE BID FOR PIPE AND FITTINGS.
2. CONTRACTOR TO EXCAVATE ALL UTILITY CROSSINGS AHEAD OF PIPE LAYING SO THAT THE GRADES CAN BE ADJUSTED ON THE PROPOSED WATER MAIN TO AVOID UTILITY CONFLICTS. FAILURE TO DO SO SHALL NOT ENTITLE THE CONTRACTOR TO CLAIM EXTRA COMPENSATION FOR ADJUSTMENTS TO THE PROPOSED WATER MAIN. COST FOR EXCAVATING UTILITY CROSSINGS SHALL BE INCLUDED IN UNIT PRICE BID FOR PIPE.
3. CONTRACTOR IS REMINDED TO BED AND BACKFILL ALL TRENCHES EXCAVATED ACROSS ANY EXISTING OR PROPOSED DRIVING OR PARKING SURFACE WITH 1-1/2" TYPE A AGGREGATE BASE, PLACED IN 8-INCH MAXIMUM LIFTS AND COMPACTED TO 98% MODIFIED PROCTOR DENSITY. COST TO BE INCLUDED IN COST OF PIPE INSTALLATION. NO ADDITIONAL PAYMENT SHALL BE MADE.
4. THE "CONSTRUCTION CONTINGENCY ALLOWANCE" CAN BE USED FOR VARIOUS WORK AND MISCELLANEOUS ITEMS NOT IDENTIFIED IN THE CONTRACT DOCUMENTS WITH THE FOLLOWING PROVISIONS:
   A. THE ALLOWANCE SHALL BE USED FOR COST OF MATERIALS, LABOR, INSTALLATION AND OVERHEAD AND PROFIT FOR ADDITIONAL WORK AND MISCELLANEOUS ITEMS THAT ARE NOT IDENTIFIED IN THE CONSTRUCTION DOCUMENTS AND PLANS, AND NOT INCLUDED IN THE BID ITEMS OF THE CONTRACT.
   B. THE ALLOWANCE SHALL BE USED ONLY AT THE DISCRETION OF THE CITY. ANY ALLOWANCE BALANCE REMAINING AT THE COMPLETION OF THE PROJECT WILL BE CREDITED BACK TO THE CITY ON THE FINAL APPLICATION FOR PAYMENT SUBMITTED BY THE CONTRACTOR.
   C. THE CONTRACTOR SHALL PROVIDE, TO THE CITY, A WRITTEN REQUEST FOR THE USE OF ANY ALLOWANCE, WITH A SCHEDULE OF VALUES, AND ALL ASSOCIATED BACKUP INFORMATION, INCLUDING ANY TIME EXTENSIONS REQUIRED TO PERFORM THE WORK.
   D. THE CONTRACTOR SHALL PROCEED WITH THE WORK INCLUDED IN THE ALLOWANCE ONLY AFTER RECEIVING A WRITTEN ORDER, FROM THE ENGINEER AND CITY AUTHORIZING SUCH WORK. PROCEEDING WITH WORK IN THE ALLOWANCE WITHOUT A WRITTEN ORDER FROM THE CITY WILL BE AT THE CONTRACTOR'S EXPENSE.
5. CONTRACTOR SHALL REQUEST ALL PLANT SHUTDOWNS IN WRITING AT LEASTS 14 CALENDAR DAYS IN ADVANCE. NO SHUTDOWN SHALL BE ALLOWED WITHOUT WRITTEN REQUEST FROM CONTRACTOR AND WRITTEN APPROVAL FROM PLANT STAFF (01 31 13).
6. PAY ITEMS LISTED IN THE BID SCHEDULE ARE THE ONLY PAY ITEMS FOR THE PROJECT. ANY OTHER ITEMS NECESSARY FOR A COMPLETE PROJECT, BUT NOT SHOWN IN THE BID SCHEDULE SHALL BE CONSIDERED AN INCIDENTAL ITEM AND ITS COST TO BE INCLUDED IN OTHER ITEMS.
7. THE CONTRACTOR SHALL VERIFY ALL UTILITY LOCATIONS PRIOR TO BIDDING PROJECT. ALL UTILITY LOCATIONS SHOWN ARE APPROXIMATE, EXCEPT AS NOTED.
8. ANY CONTRACTOR-CAUSED DAMAGE TO UTILITY AND/OR SERVICE LINES, SHOWN OR NOT SHOWN ON THE PLANS, SHALL BE REPAIRED OR REPLACED AT NO COST TO THE TMUA AND SHALL BE ACCOMPLISHED BY THE CONTRACTOR, SUBCONTRACTOR OR LICENSED PLUMBER AS APPROVED BY THE CITY ENGINEER.
9. THE CONTRACTOR SHALL BE RESPONSIBLE FOR FURNISHING ALL LABOR, MATERIAL, EQUIPMENT AND INCIDENTAL ITEMS NEEDED TO PROVIDE ADEQUATE CONSTRUCTION SIGNING, BARRICADES, TRAFFIC CONTROL DEVICES AND OTHER RELATED ITEMS FOR THE PROJECT AREA, DURING THE CONSTRUCTION PERIOD. THIS WORK IS TO BE CONSIDERED AN INCIDENTAL ITEM AND THE COST OF THIS ITEM IS TO BE INCLUDED IN OTHER PAY ITEMS.
10. THE CONTRACTOR SHALL VERIFY ALL DIMENSIONS AND ELEVATIONS PRIOR TO THE START OF WORK.
11. THE CONTRACTOR SHALL BE RESPONSIBLE FOR ALL SURVEYING AND CONSTRUCTION STAKING FOR THE PROJECT.
12. THE CONTRACTOR SHALL OBTAIN ALL REQUIRED TRADE PERMITS PRIOR TO WORK. ALL TRADE LABOR SHALL BE INSPECTED BY THE LOCAL AUTHORITY HAVING JURISDICTION AND SHALL PASS A FINAL INSPECTION.
13. THE CONTRACTOR SHALL CONDUCT ALL WORK IN ACCORDANCE WITH APPLICABLE OSHA STANDARDS, STATE OF OKLAHOMA AND CITY OF TULSA SAFETY POLICIES.
14. TO CONTROL EROSION AND SEDIMENTS FROM STORMWATER RUNOFF, FINAL STABILIZATION OF DISTURBED AREAS AND SLOPES SHALL BE ACHIEVED BY PERMANENT VEGETATIVE COVER OR INSTALLING APPROVED PERMANENT SURFACE MATERIALS OR STRUCTURES. ALL DISTURBED AREAS MUST BE STABILIZED WITHIN 14 DAYS OF PROJECT COMPLETION. FOR PROJECTS EXCEEDING 40 ACRES OR LOCATED WITHIN ONE (1) MILE OF AN IMPAIRED/TMDL WATERBODY, THE CONTRACTOR SHALL COMPLETE FINAL SOIL STABILIZATION MEASURES WITHIN 7 DAYS OF PROJECT COMPLETION.

GENERAL CONSTRUCTION NOTES (CONT.):

15. ALL WORK SHALL BE CONDUCTED IN A MANNER THAT COMPLIES WITH THE CITY'S MUNICIPAL STORMWATER DISCHARGE PERMIT (MS4), POLLUTION ORDINANCE, AND STORMWATER MANAGEMENT PROGRAM (SMWP). CONTRACTORS WILL PREVENT THE DISCHARGE OF POLLUTANT INTO THE CITY'S STORM SEWER SYSTEM OR WATERS OF THE STATE TO THE MAXIMUM EXTENT PRACTICABLE. CONSTRUCTION VEHICLE WASH WATERS ARE NOT TO BE DISCHARGED INTO THE CITY OF TULSA WATERS OR WATERS OF THE STATE.
16. THE CONTRACTOR SHALL ENSURE NO EQUIPMENT OR MATERIALS ARE STORED IN THE FEDERAL OR CITY FLOODPLAIN.

WATER CONSTRUCTION NOTES:

1. MINIMUM COVER OVER WATER LINES SHALL BE AS NOTED ON PLANS.
2. AB JEWELL WTP OPERATORS ONLY ARE TO OPERATE ALL VALVES. CONTRACTOR SHALL NOTIFY CITY THRU INSPECTOR.
3. UNLESS OTHERWISE SHOWN PIPING SHALL HAVE A MINIMUM OF 30" OF COVER.
4. CONTRACTOR SHALL REPLACE EXISTING GRASS WITH SEED/SOD OF SAME TYPE AND VARIETY OR AS NOTED ON THE PLANS.
5. CITY CREWS ONLY ARE TO OPERATE ALL VALVES. CONTRACTOR SHALL NOTIFY CITY THRU INSPECTOR.
6. CONTRACTOR SHALL BE RESPONSIBLE FOR LOCATING UTILITIES ON THE PLANT SITE. THE NOTIFICATION CENTER OF THE OKLAHOMA ONE-CALL SYSTEM, INC, WILL NOT LOCATE UTILITIES ON THE PLANT SITE.
7. CONSTRUCTION FOR ALL PUBLIC WORKS FACILITIES SHALL BE IN COMPLIANCE WITH THE LATEST EDITION OF TITLE 252, DEPARTMENT OF ENVIRONMENTAL QUALITY, CHAPTER 626, PUBLIC WATER SUPPLY CONSTRUCTION STANDARDS, OKLAHOMA DEPARTMENT OF ENVIRONMENTAL QUALITY (ODEQ).
8. ALL EXCAVATED MATERIAL NOT REQUIRED IN OTHER AREAS OF THE PROJECT SHALL BECOME THE PROPERTY OF THE CONTRACTOR AND SHALL BE DISPOSED OF BY THE CONTRACTOR IN A MANNER ACCEPTABLE TO THE ENGINEER WITHOUT COST OR IMPACT TO THE CITY. THE CONTRACTOR SHALL BE REQUIRED TO OBTAIN AN EARTH CHANGE PERMIT IF ANY EXCESS MATERIAL IS TO BE DISPOSED OF WITHIN THE CITY LIMITS OF TULSA.
9. "FINAL GRADE" IS ASSUMED TO BE COMPLETED PRIOR TO THIS PROJECT'S CONSTRUCTION AND NOFITY ENGINEER OF ANY MAJOR DISCREPANCIES.

GENERAL LEGEND

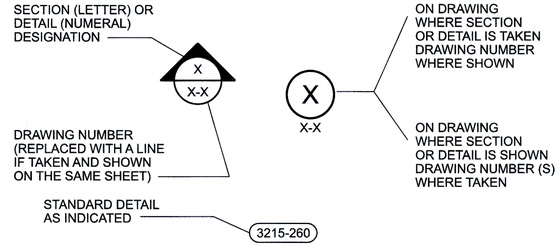

DETAIL AND SECTION DESIGNATION

BID SCHEDULE:

THE UNIT PRICE WORK IS DESCRIBED IN MORE DETAIL IN SECTION 01 29 00 PAYMENT PROCEDURES.

GENERAL
LEGEND AND NOTES

PROJECT NO. TMUA-W 24-05

A.B. JEWELL WTP RESIDUALS IMPROVEMENTS PHASE 2

CITY OF TULSA, OKLAHOMA
WATER AND SEWER DEPARTMENT

PLANS AND ESTIMATES PREPARED BY: Jacobs

VERIFY SCALE
BAR IS ONE INCH ON ORIGINAL DRAWING.
0 1"

REVISION	BY	DATE

PLAN SCALE: AS NOTED
PROFILE SCALE:
HORIZONTAL: N/A
VERTICAL N/A

DRAWN	SM	05/2026	APPROVED:
DESIGNED	JW	05/2026	
SURVEY			
PROJ. MGR.	NHW	6/26	
LEAD ENGR.	CEW	6/26	
FIELD MGR.		7/26	DESIGN MANAGER

FILE: DRAWING: G-2
DATE: MAY 2026
ATLAS PAGE NO: 543
SHEET 2 OF 47 SHEETS



05/11/2026

ISSUED FOR BID

PATHNAME: 001-G-0002_D3910200.dgn PLOT DATE: 05/07/2026 PLOT TIME: 11:16:08 AM

ABBREVIATIONS

A	AMMETER, AMPERES, AWNINGS
AB	ANCHOR BOLT, ABOVE
ABDN	ABANDON
AC	ACOUSTICAL, ACOUSTICAL CEILING
AC	ALTERNATING CURRENT
AC	ASPHALTIC CONCRETE
ACFL	ACCESS FLOORING
ACI	AMERICAN CONCRETE INSTITUTE
ACMU	ACOUSTICAL CONCRETE MASONRY UNIT, UNIT, ACOUSTICAL CMU
ACP	ACOUSTICAL PANELS
ACST	ACOUSTICAL
ACT	ACOUSTICAL TILE
AD	AREA DRAIN
ADDL	ADDITIONAL
ADJ	ADJACENT
ADW	DRY WEATHER AVERAGE
AFD	ADJUSTABLE FREQUENCY DRIVE
AFF	ABOVE FINISHED FLOOR
AFG	ABOVE FINISHED GRADE
AG	ACOUSTICAL, ACOUSTICAL GLASS
AGGR	AGGREGATE
AHR	ANCHOR
AISC	AMERICAN INSTITUTE OF STEEL CONSTRUCTION
AJ	ADJUSTABLE
AL	ALUMINUM
ALKY	ALKALINITY
ALTN	ALTERNATE
AM	AUTO-MANUAL
AMRD	ACOUSTICAL METAL ROOF DECKING
ANDZ	ANODIZE
APPROX	APPROXIMATE
APVD	APPROVED
ARCH	ARCHITECTURAL
AR	ANALOG RELAY
AS	AS SELECTED
ATS	AUTOMATIC TRANSFER SWITCH
AUTO	AUTOMATIC
AUX	AUXILIARY
AVG	AVERAGE
AVRV	AIR/VACUUM RELEASE VALVE
AWW	WET WEATHER AVERAGE
@	AT
B	BELL
BAL	BALANCE
BETW	BETWEEN
BF	BLIND FLANGE, BOTTOM FACE
BFV	BUTTERFLY VALVE
BL	BASELINE
BFP	BACKFLOW PREVENTER
BLDG	BUILDING
BLK	BLOCK
BM	BEAM, BENCHMARK
BO	BOTTOM OF
B.O.B.	BOTTOM OF BEAM
BOD	BOTTOM OF DUCT
BOP	BOTTOM OF PIPE
BOT	BOTTOM
BRG	BEARING
BRK	BRICK
BRKR	BREAKER
BSP	BLACK STEEL PIPE
BV	BALL VALVE, BLOCK VENT
BVC	BEGINNING OF VERTICAL CURVE
C	CONDUIT, CASEMENT
°C	DEGREE CELSIUS
C TO C	CENTER TO CENTER
CAB	CABINET
CB	CATCH BASIN, CIRCUIT BREAKER
CC	CENTER OF CIRCLE
CC	CONTROL CABLE
CCP	CENTRAL CONTROL PANEL
CCS	CENTRAL CONTROL SYSTEM
CDF	CONTROLLED DENSITY FILL
CE	CONSTRUCTION ENTRANCE
CFM	CUBIC FEET PER MINUTE
CFS	CUBIC FEET PER SECOND
CHEM	CHEMICAL
CHKD	CHECKERED
CI	CAST IRON
CIP	CAST IRON PIPE, CAST IN PLACE
CIP	CULVERT INLET PROTECTION
CISP	CAST IRON SOIL PIPE
CJ	CONSTRUCTION JOINT
CKT	CIRCUIT
CL	CENTERLINE
CLDI	CEMENT LINED DUCTILE IRON
CLSF	CONTROLLED LOW STRENGTH FILL
CLG	CEILING
CLR	CLEAR, CLEARANCE
CLSM	CONTROLLED LOW STRENGTH MATERIAL
CMP	CENTRAL MONITORING PANEL
CMP	CORRUGATED METAL PIPE
CMU	CONCRETE MASONRY UNIT
CNTR	COUNTER
CO	CLEANOUT, CARBON MONOXIDE
COL	COLUMN, COLOR
CONC	CONCRETE
COND	CONDENSATE
CONDTN	CONDITIONED
CONN	CONNECTION
CONSTR	CONSTRUCTION
CONT	CONTINUED, CONTINUOUS, CONTINUATION
CONTR	CONTRACTOR
COORD	COORDINATE
COP	COPPER
CP	CENTER PIVOT
CP-X	CONTROL PANEL NO. X
CPLG	COUPLING
CPRSR	COMPRESSOR
CPT	CONTROL POWER TRANFORMER, CARPET
CPVC	CHLORINATED PVC
CR	CONTROL RELAY
CRS	COLD ROLLED STEEL
CRS	CONSTRUCTION ROAD STABILIZATION
CT	CERAMIC TILE
CT	CURRENT TRANSFORMER
CTC	COMPUTER TERMINAL CABINET
CTR	CENTER
CTRD	CENTERED
CTSK	COUNTERSUNK
CU	CUBIC
CU FT	CUBIC FOOT
CU IN	CUBIC INCH
CUH	COPPER TUBING, HARD DRAWN
CV	CHECK VALVE
CWR	CABINET DOOR MOUNTED WASTE RECEPTACLE
CY, CU YD	CUBIC YARD
CWS	CLEAN WATER SERVICES
D	DEEP, DRAIN
d	PENNY NAIL SIZE
DA	DUAL ACTION
DAS	DATA ACQUISTION SYSTEM
DBA	DEFORMED BAR ANCHOR
DBL	DOUBLE
DC	DIRECT CURRENT
DEG	DEGREE
DET	DETAIL
DF	DOUGLAS FIR, DRINKING FOUNTAIN
DDI	DROP INLET
DH	DOUBLE HUNG
DI	DUCTILE IRON
DIA	DIAMETER
DIAG	DIAGONAL
DIP	DUCTILE IRON PIPE
DIR	DIRECTION
DISCH	DISCHARGE
DN	DOWN
DO	DISSOLVED OXYGEN
DOL	DIRECT-ON-LINE
DP, DPNL	DISTRIBUTION PANEL
DR	DOOR
DS	DOWNSPOUT
DWG	DRAWING
DWL	DOWEL
△	DELTA
E	EAST, EMPTY
EA	EACH, EXHAUST AIR
EB, EBCT	EMPTY BED CONTACT TIME
ECC	ECCENTRIC
EE	EMERGENCY EYEWASH
EDF	EGG-SHAPED DIGESTER FACILITY
EF	EACH FACE, EXHAUST FAN
EFF	EFFICIENCY, EFFICIENT
EFL	EFFLUENT
EIFS	EXTERIOR INSULATION AND FINISH SYSTEM
EL	ELEVATION
ELB	ELBOW
ELC	ELECTRICAL LOAD CENTER
ELEC	ELECTRIC, ELECTRICAL
ENGR	ENGINEER
EOP	EDGE OF PAVEMENT
ESC	EROSION AND SEDIMENT CONTROL
EP	EXPLOSION PROOF, EDGE OF PAVING
EQL	EQUAL
EQL SP	EQUALLY SPACED
EQPT	EQUIPMENT
ESC	EROSION AND SEDIMENT CONTROL
ETM	ELAPSED TIME METER
EVC	END OF VERTICAL CURVE
EW	EACH WAY
EWC	ELECTRIC WATER COOLER
EXH	EXHAUST
EXP	EXPANSION, EXPOSED
EXP AB	EXPANSION ANCHOR BOLT
EXP JT	EXPANSION JOINT
EXST	EXISTING
EXT	EXTERIOR
°F	DEGREE FAHRENHEIT
FB	FLAT BAR
F, FU	FUSE
F, FX	FIXED
FAP	FIRE ALARM PANEL
FC	FLEXIBLE CONDUIT
FCA	FLANGED COUPLING ADAPTER
FCL2	FREE CHLORINE RESIDUAL
FCO	FLOOR CLEANOUT
FCTY	FACTORY
FD	FLOOR DRAIN
FDN	FOUNDATION
FDR	FEEDER
FEXT	FIRE EXTINGUISHER
FF	FINISHED FLOOR
FG	FINISH GRADE, FLOAT GLASS
FH	FLAT HEAD
FHY	FIRE HYDRANT
FIG	FIGURE
FL	FLOW LINE
FLG	FLANGE
FL	FLOOR
FLEX	FLEXIBLE
FLH	FLAT HEAD
FLTR	FILTER
FLUOR	FLUORESCENT
FNSH	FINISH
FOB	FLAT ON BOTTOM
FOT	FLAT ON TOP
FP	FIELD PANEL
FPM	FEET PER MINUTE
FR	FORWARD REVERSE
FRP	FIBERGLASS REINFORCED PLASTIC
FSHS	FOLDING SHOWER SEAT
FT	FOOT OR FEET
FTG	FOOTING
FU	FIXTURE UNIT
FVNR	FULL VOLTAGE NON-REVERSING
FVR	FULL VOLTAGE REVERSING
FWD	FORWARD
G, GND	GROUND
GA	GAUGE
GAL	GALLON
GALV	GALVANIZED
GB	GYPSUM BOARD
GC	GROOVED COUPLING
GCMU	GLAZED CONCRETE MASONRY UNITS
GFA	GROOVED FLANGE ADAPTER
GFI	GROUND FAULT INTERRUPTER
GFR	GROUND FAULT RELAY
GH	GREENHOUSE
GL	GLASS
GPD	GALLONS PER DAY
GPH	GALLONS PER HOUR
GPM	GALLONS PER MINUTE
GPS	GLOBAL POSITION SYSTEM
GRTG	GRATING
GSB	GYPSUM SOFFIT BOARD
GSP	GALVANIZED STEEL PIPE
GV	GATE VALVE
GVL	GRAVEL
GWB	GYPSUM WALLBOARD
GYP	GYPSUM
H	HIGH, HORN OR HOWLER
H2S	HYDROGEN SULFIDE
H.A.S.	HEADED ANCHOR STUD
HC	HOLLOW CORE WOOD
HCL	HYDROCHLORIC ACID
HDNR	HARDENER
HDNS	HARDNESS
HDR	HEADER
HDW	HARDWARE
HGL	HYDRAULIC GRADE LINE
HK	HOOK
HGT	HEIGHT
HH	HANDHOLE
HID	HIGH INTENSITY DISCHARGE
HK	HOOK
HM	HOLLOW METAL
HOA	HAND-OFF-AUTO
HOR	HAND-OFF-REMOTE
HORIZ	HORIZONTAL
HP	HORSEPOWER
HPT	HIGH POINT
HPU	HYDRAULIC POWER UNIT
HR	HOSE RACK, HANDRAIL
HV	HOSE VALVE
HVAC	HEATING, VENTILATING AND AIR CONDITIONING
HWL	HIGH WATER LEVEL
IC	INTERRUPTING CAPACITY
ID	INDUCED DRAFT, INSIDE DIAMETER
IE	INVERT ELEVATION
I.F.	INSIDE FACE
IG	INSULATING, INSULATING GLASS
IN	INCH
INCAND	INCANDESCENT
INFL	INFLUENT
INJS	INJECTIONS
INST	INSTANTANEOUS
INSTM	INSTRUMENT, INSTRUMENTATION
INSUL	INSULATION
INVT	INVERT
IP	INLET PROTECTION, INSTRUMENTATION PANEL
IRRIG	IRRIGATION
ITG	INSULATED TEMPERED GLASS
ITX	ISOLATION TRANSFORMER
IU	INTAKE UNIT
IW	IRRIGATION WELL
J	JALOUSIE
JA	JAL-AWNING
JB	JUNCTION BOX
JAN	JANITOR
JCT	JUNCTION
JT	JOINT
K	KEY GROUP, KEY INTERLOCK
KIP	THOUSAND POUNDS
KIT	KITCHEN
K-PL	KICKPLATE
KSK	KITCHEN SINK
KV	KILOVOLTS
KVA	KILOVOLT AMPERES
KVAR	KILOVOLT AMPERES REACTIVE
KW	KILOWATT
L	ANGLE, LENGTH
LA	LIGHTNING ARRESTER
LAB	LABORATORY
LAM	LAMINATE
LAT	LATITUDE
LB	POUND
LC	LIGHTING CONTACTOR
LD	COMBINATION LOUVER/DAMPER
LDG	LOADING DOCK
LEL	LOWER EXPLOSIVE LIMIT
LF	LINEAR FEET
LG	LONG
LH	LEFT HAND
LHR	LEFT HAND REVERSE
LLH	LONG LEG HORIZONTAL
LLV	LONG LEG VERTICAL
LNTL	LINTEL
LONG	LONGITUDINAL
LOS	LOCK-OUT STOP PUSHBUTTON
LP	LIGHT POLE, LIGHTING PANEL, LOCAL PANEL
LPT	LOW POINT
LR	LATCHING RELAY
LR	LOCAL-REMOTE
LR	LONG RADIUS
LS	LABORATORY SINK
LT	LEFT
LTG, LTS	LIGHTS OR LIGHTING
LTX	LIGHTING TRANSFORMER
LWL	LOW WATER LEVEL
MA	MANUAL-AUTO
MAS	MASONRY
MATL	MATERIAL
MAX	MAXIMUM
MB	MACHINE BOLT
MC	MASONRY CLEARANCE
MC	MODULATE-CLOSE
MCC	MOTOR CONTROL CENTER
MCJ	MASONRY CONTROL JOINT
MDO	MEDIUM DENSITY OVERLAY
MECH	MECHANICAL
MFD	MANUFACTURED
MFR	MANUFACTURER
MGD	MILLION GALLONS PER DAY
MH	MANHOLE, MOUNTING HEIGHT
MIN	MINIMUM
MISC	MISCELLANEOUS
MJ	MECHANICAL JOINT
MLO	MAIN LUGS ONLY
MMDW	DRY WEATHER MAXIMUM MONTH
MMP	MECHANICAL MOUNTING PANEL
MMWW	WET WEATHER MAXIMUM MONTH
MO	MANUAL OPERABLE, MASONRY OPENING
MP	METAL PANEL
MPU	MULTIPURPOSE UNIT
MS	MANUFACTURER'S STANDARD
MSC	MANUFACTURER SUPPLIED CABLE
MSR	GROUPED MOTOR CONTROL
MT	MOUNT
MTD	MOUNTED
MTG	MOUNTING
MTS	MANUAL TRANSFER SWITCH
MTS	MILL TYPE STEEL PIPE
MU	MULCHING
MV	MERCURY VAPOR
MWS	MAXIMUM WATER SURFACE
N	NORTH, NEUTRAL
NA	NOT APPLICABLE
NA	NON-AUTOMATIC
NC	NORMALLY CLOSED
NEUT	NEUTRAL
NG	NATURAL GAS
NGVD	NATIONAL GEODETIC VERTICAL DATUM
NIC	NOT IN CONTRACT
N.O.	NORMALLY OPEN
NO., #	NUMBER
NOM	NOMINAL
NP	NON-PROTECTED
NPT	NATIONAL PIPE THREADS
NS	NON-SHRINK
NTS	NOT TO SCALE
O2	OXYGEN
O TO O	OUT TO OUT
OA	OVERALL, ODOROUS AIR
OC	ON CENTER
OC	OPEN-CLOSE (O)
OCA	OPEN-CLOSE-AUTO
OCR	OPEN-CLOSE-REMOTE
OD	OUTSIDE DIAMETER, OVERFLOW DRAIN
O.F.	OUTSIDE FACE
OFCI	OWNER FURNISHED, CONTRACTOR INSTALLED
OFOI	OWNER FURNISHED, OWNER INSTALLED
OL	OVERLOAD RELAY
OO	ON-OFF
OOA	ON-OFF-AUTO
OOR	ON-OFF-REMOTE
OP	OPAQUE PANEL, OUTLET PROTECTION
OPER	OPERATOR
OPNG	OPENING
OPP	OPPOSITE
OSA	OUTSIDE AIR
OSC	OPEN-STOP-CLOSE
OSD	OPEN SITE DRAIN
OWSJ	OPEN WEB STEEL JOIST
OZ	OUNCE
P	PILASTER, PIPE, PROJECTED
PB	PUSHBUTTON SWITCH
PC	PRECAST CONCRETE PANEL
PCV	PRESSURE CONTROL VALVE
PH	PHASE
PI	POINT OF INTERSECTION
PL	PLATE (STEEL)
PL	PROPERTY LINE
PLAM	PLASTIC LAMINATE
PLAS	PLASTER, PLASTIC
PLC	PROGRAMMABLE LOGIC CONTROLLER
PLYWD	PLYWOOD
PNL	PANEL
PP	POWER POLE
P-P	PUSH-PULL
PPL	POLYPROPYLENE LINED
PR	PAIR
PRC	POINT OF REVERSE CURVE
PRCST	PRECAST
PREFAB	PREFABRICATION
PRES	PRESSURE
PRI	PRIMARY
PRM	PERMANENT REFERENCED MARKER
PROJ	PROJECTION
PROP	PROPERTY
PS	PLASTIC SHEET, POLYCARBONATE SHEET
PS	PAINT SYSTEM
PSF	POUNDS PER SQUARE FOOT
PSI	POUNDS PER SQUARE INCH
PSIG	POUNDS PER SQUARE INCH, GAUGE
PT	POINT OF TANGENCY
PT	POTENTIAL TRANSFORMER
PT	PRESSURE TREATED
PTD	PAPER TOWEL DISPENSER
PTN	PARTITION
PV	PLUG VALVE
PVC	POLYVINYL CHLORIDE
PVI	POINT OF VERTICAL INTERSECTION
PVMT	PAVEMENT
PVT	POINT OF VERTICAL TANGENCY
QAA	AVERAGE FLOW
QMM	MAXIMUM 30 DAY FLOW
QPI	PEAK INSTANTANEOUS FLOW
QPP	PEAK PUMPING FLOW
QT	QUARRY TILE
R	RISER
R OR RAD	RADIUS
RA	RETURN AIR
RC	REINFORCED CONCRETE
RCP	REINFORCED CONCRETE PIPE
RCPT	RECEPTACLE
RD	ROAD, ROOF DRAIN
RDCR	REDUCER
RDW	REDWOOD
RECIR	RECIRCULATION
REF	REFER OR REFERENCE
REFR	REFRIGERATE, REFRIGERANT

NOTES:

1. CONTACT ENGINEER FOR ABBREVIATIONS USED BUT NOT SHOWN ON THIS DRAWING.

GENERAL NOTE:

1. THIS IS A STANDARD LEGEND SHEET. THEREFORE, NOT ALL OF THE INFORMATION SHOWN MAY BE USED ON THIS PROJECT.

PATHNAME: 001-G-0003_D3910200.dgn PLOT DATE: 6-MAY-2026 PLOT TIME: 14:00

OKLAHOMA PROFESSIONAL ENGINEER
B. LUKE LENARD 28364
05/11/2026

VERIFY SCALE
BAR IS ONE INCH ON ORIGINAL DRAWING.
0 1"

REVISION	BY	DATE

GENERAL ABBREVIATIONS

PROJECT NO. TMUA-W 24-05

A.B. JEWELL WTP RESIDUALS IMPROVEMENTS PHASE 2

CITY OF TULSA, OKLAHOMA
WATER AND SEWER DEPARTMENT

PLANS AND ESTIMATES PREPARED BY: Jacobs

PLAN SCALE: AS NOTED	DRAWN	SM	05/2026	APPROVED:
	DESIGNED	JW	05/2026	
PROFILE SCALE:	SURVEY			
HORIZONTAL: N/A	PROJ. MGR.			
	LEAD ENGR.			
VERTICAL N/A	FIELD MGR.			DESIGN MANAGER
FILE:	DRAWING: G-3		DATE: MAY 2026	
ATLAS PAGE NO: 543			SHEET 3 OF 47	SHEETS

ISSUED FOR BID

CIVIL LEGEND

EXISTING	THIS CONTRACT	
× 157.7	⊗ 158.5	SPOT ELEVATION
155	155	CONTOUR LINE
	3:1	EMBANKMENT AND SLOPE
		DRAINAGEWAY OR DITCH
		CATCH BASIN OR INLET
		TRENCH DRAIN
	OR	SIGN
	D OR S	MANHOLE
	E	ELECTRICAL MANHOLE
	E	ELECTRIC HANDHOLE
		POST OR GUARD POST
		GUY ANCHOR
		FIRE HYDRANT
		UTILITY POLE
		LIGHT POLE
	BM	BENCH MARK
		SURVEY CONTROL POINT OR POINT OF INTERSECTION
		BRUSH/TREE LINE
		TREE
		PROPERTY LINE
		CENTER LINE, BUILDING, ROAD, ETC.
		STAGING OR WORK AREA LIMITS
	N 1000.00 / E 1000.00	STRUCTURE, BUILDING OR FACILITY LOCATION POINT - COORDINATES
	B-1	BORING LOCATION AND NUMBER
	TP-2	TEST PIT LOCATION AND NUMBER
	P-3	PIEZOMETER LOCATION AND NUMBER
OR	OR	DEMOLITION
OR	OR	STRUCTURE, BUILDING OR FACILITY
		ASPHALT CONCRETE PAVEMENT
		GRAVEL SURFACING
CONC.		CONCRETE PAVEMENT SIDEWALK
		CURB
		CURB AND GUTTER
		VALLEY GUTTER
		SINGLE SWING GATE
		DOUBLE SWING GATE
		SLIDING GATE
		CHAIN LINK FENCE
		ARCHITECTURAL FENCE
		WIRE FENCE
		CULVERT
EX		EXISTING BURIED ELECTRIC

YARD PIPING LEGEND

EXISTING	THIS CONTRACT	
		NOMINAL PIPE DIAMETER
		PIPE USE IDENTIFICATION
8" PE	8" PE	PIPING < 30" DIAMETER
		PIPING ≧ 30" DIAMETER
		EXISTING PIPE TO BE ABANDONED
		EXISTING PIPE TO BE REMOVED
		NON-FREEZE HOSE VALVE (V-X) X = NO. IN SPECIFICATIONS
		NON-FREEZE HOSE VALVE WITH HOSE RACK (V-X) X = NO. IN SPECIFICATIONS
		INDICATOR POST VALVE
		GATE VALVE AND VALVE BOX
		BUTTERFLY VALVE AND VALVE BOX
		PLUG VALVE AND VALVE BOX
		FLEXIBLE COUPLING
		90° ELBOW UP
		90° ELBOW DOWN
		BEND < 90° UP
		BEND < 90° DOWN
		CONCENTRIC REDUCER
		CAP OR PLUG
		CLEANOUT
		FIRE HYDRANT

GENERAL NOTE:

1. THIS IS A STANDARD LEGEND SHEET. THEREFORE, NOT ALL OF THE INFORMATION SHOWN MAY BE USED ON THIS PROJECT.

LICENSED PROFESSIONAL ENGINEER SAMUEL P. CHANDLER 35637 OKLAHOMA
05/11/2026

VERIFY SCALE
BAR IS ONE INCH ON ORIGINAL DRAWING.
0 1"

REVISION	BY	DATE

GENERAL
CIVIL AND YARD PIPPING LEGEND

PROJECT NO. TMUA-W 24-05

A.B. JEWELL WTP RESIDUALS IMPROVEMENTS PHASE 2

CITY OF TULSA, OKLAHOMA
WATER AND SEWER DEPARTMENT

PLANS AND ESTIMATES PREPARED BY: Jacobs

PLAN SCALE: AS NOTED	DRAWN	SM	05/2026	APPROVED:
	DESIGNED	EI	05/2026	
PROFILE SCALE:	SURVEY			
HORIZONTAL: N/A	PROJ. MGR.	[illegible]	6/26	
	LEAD ENGR.	[illegible]	6/26	
VERTICAL N/A	FIELD MGR.	[illegible]	7/26	DESIGN MANAGER
FILE:	DRAWING: G-4			DATE: MAY 2026
ATLAS PAGE NO: 543				SHEET 4 OF 47 SHEETS

ISSUED FOR BID

PATHNAME: 001-G-0004_D3910200.dgn PLOT DATE: 6-MAY-2026 PLOT TIME: 13:59

ARCHITECTURAL ABBREVIATIONS

ABBREVIATION	DEFINITION
A	AWNING
AC	ACOUSTICAL CEILING
ACFL	ACCESS FLOORING
ACMU	ACOUSTICAL CMU
ACT	ACOUSTICAL TILE
AJ	ADJUSTABLE
AL	ALUMINUM
AS	AS SELECTED
BRK	BRICK
BNZ	BRONZE
BV	BLOCK VENT
C	CASEMEMT
CLR	CLEAR
CLSR	CLOSER
CMU	CONCRETE MASONRY UNITS
CNTR	COUNTER
COL	COLOR
CONC	CONCRETE
CONSTR	CONSTRUCTION
CPT	CARPET
CRC	CHEMICAL-RESISTANT COATINGS
CT	CERAMIC TILE
DA	DUAL ACTION
DB	DRAINABLE
DH	DOUBLE HUNG
EIFS	EXTERIOR INSULATION AND FINISH SYSTEM
EXP	EXPOSED STRUCTURE
FCTY	FACTORY
FNSH	FINISH
FRP	FIBERGLASS REINFORCED PLASTIC
FWC	FABRIC WALL COVERING
FX	FIXED
GALV	GALVANIZED STEEL
GCMU	GLAZED CONCRETE MASONRY
GH	GREENHOUSE
GLZ	GLAZING
GMU	GLASS MASONRY UNITGRY GRAY
GSB	GYPSUM SOFFIT BOARD
GWB	GYPSUM BOARD
HC	HOLLOW CORE
HDNR	HARDENER
HGT	HEIGHT
HM	HOLLOW METAL
HS	HORIZONTAL SLIDING
J	JALOUSIE
JA	JAL-AWNING
KEY	KEY GROUP
KPL	KICK PLATE
LD	COMBINATION LOUVER/DAMPER
MATL	MATERIAL
MDO	MEDIUM DENSITY OVERLAY
MET	METAL
MO	MANUALLY OPERABLE
MS	MANUFACTURER'S STANDARD
P	PROJECTED
PAVT	PAVER TILE
PLAM	PLASTIC LAMINATE
PLAS	PLASTER
PLWD	PLYWOOD
PNL	PANELING
PP	PUSH-PULL
PTN	PARTITION
QT	QUARRY TILE
RESIL	RESILIENT
RFS	ROLL-UP FIRE SHUTTER
RRUB	RADIAL RUBBER FLOORING
RUB	RUBBER SHEET FLOORING
SC	SOLID CORE WOOD
SIM	SIMILAR
SMLS	SEAMLESS EPOXY
SOI	SPRAY-ON INSULATION
SP	STORMPROOF
SST	STAINLESS STEEL
STL	STEEL
SVIN	SHEET VINYL
TCTG	TRAFFIC COATING
TH	TOP HINGED
TR	TRANSOM
TSHD	THRESHOLD
TWP	TRANSLUCENT PANEL SYSTEM
VCT	VINYL COMPOSITION TILE
VINT	VINYL TILE
VNL	VINYL
VP	VERTICAL PIVOTED
VS	VERTICAL SLIDE
VWC	VINYL WALL COVERING
WD	WOOD
WHT	WHITE
WRB	WATER RESISTANT GWB
WS	WEATHERSTRIPPING
WW	WINDOW WALL
X	OPEN

ARCH/STRUCT MATERIAL SYMBOLS

SYMBOL	LEGEND	SYMBOL	LEGEND
	GRATING, SPAN DIRECTION INDICATED		WOOD STUD WALL (PLAN)
	CHECKERED PLATE		RIGID INSULATION
	GROUT		BATT INSULATION
	GRANULAR FILL		STEEL
	EARTH OR FINISH GRADE		ALUMINUM
	CONCRETE		PLYWOOD
	CMU WALL (PLAN)		GYPSUM WALLBOARD
	CMU WALL (SECTION)		ACOUSTICAL TILE
	MASONRY WALL		WOOD, ROUGH CONTINUOUS
	METAL STUD WALL (PLAN)		WOOD, ROUGH NON-CONTINUOUS
			WOOD, FINISHED

GENERAL ARCHITECTURAL NOTES

1. UNLESS OTHERWISE INDICATED, PLAN DIMENSIONS ARE TO COLUMN GRID ON CENTERLINES, NOMINAL SURFACE OF MASONRY, FACE OF STUDS AND FACE OF CONCRETE WALLS.
2. "FLOOR LINE" REFERS TO TOP OF CONCRETE SLABS. FINISH FLOORING IS INSTALLED ABOVE THE FLOOR LINE. FOR DEPRESSED FLOORS AND CURBS, SEE STRUCTURAL DRAWINGS.
3. REPETITIVE FEATURES ARE NOT DRAWN IN THEIR ENTIRETY AND SHALL BE COMPLETELY PROVIDED AS IF DRAWN IN FULL.
4. WHERE DOOR IS LOCATED NEAR CORNER OF ROOM AND IS NOT LOCATED BY DIMENSION ON PLAN OR DETAILS, DIMENSION SHALL BE 3-INCHES FROM FACE OF STUD (WALL) TO FACE OF ROUGH OPENING. DIMENSION SHALL BE 6" FROM FACE OF ALL TO EDGE OF ROUGH OPENING AT CONCRETE WALLS, 8" AT CMU WALLS.
5. AT SOUND INSULATED WALLS, FULL HEIGHT PARTITIONS SHALL BE SEALED BOTH SIDES WITH ACOUSTIC SEALANT; TOP, BOTTOM, INTERSECTION, DOOR FRAMES, GLAZED OPENING FRAMES, AND OTHER PENETRATIONS.
6. LINE OF EXISTING GRADES, AS SHOWN ON THE BUILDING ELEVATIONS AND SECTIONS ARE APPROXIMATE. THEY ARE AT THE BUILDING FACE, OR ON THE SECTION END EXCEPT AS NOTED.
7. VERIFY ALL ROUGH-IN DIMENSIONS FOR EQUIPMENT PROVIDED IN THIS CONTRACT, OR BY OTHERS.
8. REFER TO ARCHITECTURAL, STRUCTURAL, MECHANICAL, ELECTRICAL AND OTHER CATEGORIES OR DRAWINGS FOR ADDITIONAL NOTES.
9. VERIFY SIZE AND LOCATION OF, AND PROVIDE: REQUIRED OPENINGS THROUGH FLOORS AND WALLS, ACCESS DOORS, FURRING, CURBS, ANCHORS AND INSERTS. PROVIDE ALL BASES AND BLOCKING REQUIRED FOR ACCESSORIES, MECHANICAL, ELECTRICAL AND OTHER EQUIPMENT.
10. FOR APPLICABLE CODES AND LIFE SAFETY PLAN, SEE DRAWING A-1.
11. FOR DOOR AND HARDWARE DESCRIPTIONS SEE SPECIFICATION SECTION 08 06 01.
12. FOR FINISH SCHEDULE, SEE SPECIFICATION SECTION 09 00 00.
13. FOR LOUVERS DESCRIPTION, SEE SPECIFICATION SECTION 08 90 00.

ARCHITECTURAL/STRUCTURAL LEGEND

SYMBOL	LEGEND	SYMBOL	LEGEND
A	GRID / COLUMN INDICATOR		DIRECTION OF SLOPE DOWN
ROOM NAME XX101 OR ROOM NAME 101	ROOM IDENTIFIER	HINGE SIDE	HATCH SWING INDICATOR
"XX" = FACILITY INDICATOR (IF SHOWN); DOOR LETTER; ROOM NUMBER; XX101A	DOOR IDENTIFIER	ACTIVE; INACTIVE; XX101A	INDICATES PAIR OF DOORS (DOOR # ON ACTIVE)
XXW-1 OR W-1	WINDOW IDENTIFIER		
XXR-1 OR R-1	RELIGHT IDENTIFIER		
XXL-1 OR L-1	LOUVER IDENTIFIER	F.EXT-X (IN CABINET); F.EXT-X (ON BRACKET)	FIRE EXTINGUISHER "X" = NUMBER IN SPECIFICATIONS
A	WALL TYPE INDICATOR	CJ	CONTROL JOINT
S-1	SIGNAGE IDENTIFIER	X" EJ	EXPANSION JOINT X" = DIMENSION
QUANTITY AND DIRECTION OF POINTERS AS REQUIRED; A B C D E; 1 XX-A-301	INTERIOR ELEVATION INDICATOR	POST	RAILINGS
⊗ 110.50	SPOT ELEVATION INDICATOR (IN FEET)	P-1	PRECAST PANEL IDENTIFIER
XXXX EL XX.XX	ELEVATION DATUM (IN FEET)	S-X	SLAB INDICATOR
		X	COLUMN INDICATOR
		W-X	WALL INDICATOR
		B-X	BEAM INDICATOR

VERIFY SCALE
BAR IS ONE INCH ON ORIGINAL DRAWING.
0 1"

REVISION	BY	DATE

LICENSED PROFESSIONAL ENGINEER
DAVID ANDREW JESSEP
23164
OKLAHOMA
05/11/2026

GENERAL
ARCHITECTURAL NOTES AND LEGEND

PROJECT NO. TMUA-W 24-05

A.B. JEWELL WTP RESIDUALS
IMPROVEMENTS PHASE 2

CITY OF TULSA, OKLAHOMA
WATER AND SEWER DEPARTMENT

PLANS AND ESTIMATES PREPARED BY:
Jacobs

PLAN SCALE: AS NOTED	DRAWN	SM	05/2026	APPROVED:
	DESIGNED	MN	05/2026	
PROFILE SCALE:	SURVEY			
HORIZONTAL: N/A	PROJ. MGR.			
	LEAD ENGR.			
VERTICAL N/A	FIELD MGR.			DESIGN MANAGER
FILE:	DRAWING: G-5			DATE: MAY 2026
ATLAS PAGE NO: 543				SHEET 5 OF 47 SHEETS

ISSUED FOR BID

PATHNAME: 001-G-0005_D3910200.dgn PLOT DATE: 6-MAY-2026 PLOT TIME: 14:00

DESIGN CRITERIA

1. APPLICABLE CODE: 2018 INTERNATIONAL BUILDING CODE (IBC), AS AMENDED BY THE STATE OF OKLAHOMA AND ALL OTHER APPLICABLE LOCAL AGENCIES.

2. REFER TO THE DRAWINGS FOR ADDITIONAL AND SPECIFIC STRUCTURE LOADINGS AND REQUIREMENTS.

3. SNOW LOADS:

GROUND SNOW LOAD, Pg	= 10 PSF
SNOW EXPOSURE FACTOR, Ce	= C
THERMAL FACTOR, Ct	= 1.0
IMPORTANCE FACTOR, I	= 1.1
SLOPE FACTOR, Cs	= 1.0
MINIMUM FLAT ROOF SNOW LOAD, Pf	= 13 PSF
DEFLECTION CRITERIA FOR ROOF FRAMING MEMBERS:	
TOTAL LOAD	L/240
LIVE LOAD	L/360
SNOW LOAD	L/240

WHERE L IS THE MEMBER'S SPAN LENGTH

4. ROOF LIVE LOAD = 20 PSF

5. FLOOR LIVE LOADS:

ELECTRICAL ROOM	300 PSF
MECHANICAL ROOM	200 PSF
STAIRS, UPPER WALKWAY SLABS	100 PSF

6. WIND LOAD:

BASIC WIND SPEED (3-SECOND GUST)	= 115 MPH
EXPOSURE	= C
RISK CATEGORY	= III

7. SEISMIC LOAD:

MAPPED SPECTRAL RESPONSE ACCELERATIONS	
S_S	= 0.133 g
S_1	= 0.072 g
DESIGN SPECTRAL RESPONSE ACCELERATIONS	
S_{DS}	= 0.108 g
S_{D1}	= 0.072 g
SITE CLASS	= C
OCCUPANCY CATEGORY	= III
SEISMIC DESIGN CATEGORY	= B
I	= 1.25

STRUCTURES HAVE BEEN ANALYZED USING THE EQUIVALENT LATERAL FORCE PROCEDURES OF ASCE 7-16.

8. LATERAL FORCE-RESISTING SYSTEMS
   NON-BUILDING STRUCTURES

9. SOIL DESIGN PARAMETERS:
   A. NET ALLOWABLE SOIL BEARING PRESSURES:
      MAT FOUNDATIONS, SPREAD FOOTINGS AND RETAINING WALLS 3000 PSF
      COLUMNS 3000 PSF
   B. NATIVE SOIL MOIST UNIT WEIGHT = 120 PCF

10. FROST DEPTH: = 24 IN

11. VERTICAL SURCHARGE = EQUIVALENT 2 FEET OF SOIL

    UNIT WEIGHT OF SOIL = 120 PCF

    COEFFICIENT OF BASE FRICTION = 0.45

12. AT-REST LATERAL EARTH PRESSURES

    DRAINED EQUIVALENT FLUID UNIT WEIGHT = 60 PCF

    UNDRAINED EQUIVALENT FLUID UNIT WEIGHT = 90 PCF

GENERAL INFORMATION

1. FOR ABBREVIATIONS NOT LISTED, SEE ASME Y14.38 "ABBREVIATIONS AND ACRONYMS: PUBLICATION AS DISTRIBUTED BY THE AMERICAN SOCIETY OF MECHANICAL ENGINEERS (ASME).

2. DESIGN DETAILS ARE INTENDED TO BE TYPICAL AND SHALL APPLY TO SIMILAR SITUATIONS OCCURRING THROUGHOUT THE PROJECT, WHETHER OR NOT THEY ARE INDIVIDUALLY CALLED OUT.

3. DETAILING AND DIMENSIONS OF EXISTING STRUCTURES SHOWN ARE BASED ON AS-BUILT DESIGN DRAWINGS, AND DO NOT NECESSARILY REPRESENT THE AS-CONSTRUCTED CONDITIONS. THE CONTRACTOR SHALL FIELD VERIFY DIMENSIONS AND DETAILING OF THE EXISTING STRUCTURES PRIOR TO FABRICATION OF ADJACENT FRAMING OR CONNECTIONS OR SUPPORTS THAT ARE AFFECTED BY THE EXISTING STRUCTURE.

4. VERIFY FINAL OPENING DIMENSIONS IN WALLS, SLABS, AND DECKS WITH OTHER DISCIPLINE DRAWINGS PRIOR TO CONSTRUCTION OF THESE ELEMENTS.

5. FOR NUMBER, TYPE, SIZE, ARRANGEMENT, AND/OR LOCATION OF EQUIPMENT PADS SEE OTHER DISCIPLINE DRAWINGS. COORDINATE WITH EQUIPMENT SUPPLIER PRIOR TO PLACING SLABS, WALLS AND FOUNDATIONS. COORDINATE PIPING OPENINGS WITH OTHER DISCIPLINE DRAWINGS.

6. STRUCTURAL MEMBERS SHALL NOT BE CUT OR MODIFIED FOR PIPES, DUCTS, ETC, UNLESS SPECIFICALLY DETAILED OR APPROVED IN WRITING BY THE ENGINEER.

7. VISITS TO THE JOB SITE BY THE ENGINEER TO OBSERVE THE CONSTRUCTION DO NOT IN ANY WAY MEAN THAT ENGINEER IS GUARANTOR OF CONSTRUCTOR'S WORK, NOR RESPONSIBLE FOR THE COMPREHENSIVE OR SPECIAL INSPECTIONS, COORDINATION, SUPERVISION, OR SAFETY AT THE JOB SITE.

FOUNDATIONS

1. FOR SUBSURFACE INFORMATION REFER TO:

   A. GEOTECHNICAL INVESTIGATION REPORT AB JEWELL WATER TREATMENT PLANT EXPANSION, BY CH2M HILL DATED JULY 1991. THE SPECIFICATIONS SHALL SUPERCEDE THE GEOTECHNICAL REPORT WHERE DIFFERENT.

   B. REPORT ON SUBSURFACE INVESTIGATION, AB JEWELL SEWAGE TREATMENT PLANT, TULSA, OKLAHOMA, PREPARED BY HEMPHILL CORPORATION JANUARY 1981 WITH ADDENDUM DATED FEBRUARY 1981.

   C. TULSA AB JEWELL RESIDUALS PROJECT GEOTECHNICAL ENGINEERING REPORT PREPARED BY TERRACON, OCTOBER 2025.

2. EXCAVATIONS SHALL BE SHORED TO PREVENT SUBSIDENCE OR DAMAGE TO ADJACENT EXISTING STRUCTURES, STREETS, UTILITIES, ETC.

3. FOUNDATION SLABS AND SLABS-ON-GRADE, AND WALL AND COLUMN FOUNDATIONS SPECIFICALLY NOTED TO BE ON FILL, SHALL BEAR ON 6 INCHES OF COMPACTED GRANUALR FILL UNLESS OTHERWISE SHOWN.

4. ALL FOUNDATION BEARING SURFACES SHALL BE OBSERVED BY A GEOTECHNICAL ENGINEER OR THEIR DESIGNEE PRIOR TO PLACEMENT OF FORMWORK OR REINFORCING STEEL. THE OBSERVATIONS SHALL VERIFY THAT THE ACTUAL EXPOSED SUBGRADE IS AS ANTICIPATED BY THE DESIGN.

5. NO BACKFILL SHALL BE PLACED BEHIND WALLS UNTIL THE WALLS HAVE ATTAINED 100 PERCENT OF THEIR SPECIFIED COMPRESSIVE STRENGTH AND TOP SUPPORTING SLAB'S CONCRETE HAVE ATTAINED 80 PERCENT OF THEIR SPECIFIED COMPRESSIVE STRENGTH, OR UNTIL TOP-OF-WALL FRAMING SYSTEMS, INCLUDING STEEL OR WOOD DIAPHRAGMS, HAVE BEEN COMPLETED.

6. NO BACKFILL SHALL BE PLACED BEHIND CANTILEVERED, FREE TOP WALLS UNTIL THE CONCRETE HAS ATTAINED 100 PERCENT OF ITS SPECIFIED COMPRESSIVE STRENGTH.

FORMWORK, SHORING AND BRACING

1. STRUCTURES SHOWN ON THE DRAWINGS HAVE BEEN DESIGNED FOR STABILITY UNDER FINAL CONDITIONS ONLY. DESIGN SHOWN DOES NOT INCLUDE NECESSARY COMPONENTS OR EQUIPMENT FOR STABILITY OF THE STRUCTURES DURING CONSTRUCTION. CONTRACTOR IS RESPONSIBLE FOR ALL WORK RELATING TO CONSTRUCTION ERECTION METHODS, BRACING, SHORING, RIGGING, GUYS, SCAFFOLDING, FORMWORK, AND OTHER WORK AIDS REQUIRED TO SAFELY PERFORM THE WORK SHOWN.

CONCRETE REINFORCING

1. MINIMUM REINFORCING FOR ALL CONCRETE WALLS AND SLABS SHALL BE AS FOLLOWS:

WALL THICKNESS	REINF EACH WAY	LOCATION
6"	#4@12"	CENTERED
8"	#5@12"	CENTERED
10"	#4@12"	EACH FACE
12"	#5@12"	EACH FACE

   PROVIDE LARGER SIZES AND MORE REINFORCING IN SECTIONS OF CONCRETE WHERE REQUIRED BY THE DETAILS ON THE DRAWINGS OR BY THE SPECIFICATIONS.

2. CLEARANCE FOR REINFORCEMENT BARS, UNLESS SHOWN OTHERWISE, SHALL BE:

WHEN PLACED ON GROUND:	3"
INTERIOR, DRY, HUMIDITY CONTROLLED AREAS:	
WALLS, SLABS AND JOISTS	3/4"
BEAM STIRRUPS AND COLUMN TIES	11/2"
ALL OTHER CONCRETE SURFACES	2"

3. REFER TO WALL CORNER AND WALL INTERSECTION REINFORCING DETAIL 0330-003. WALL CORNER REINFORCING SIZES AND SPACINGS SHALL BE AS SHOWN ON THE DRAWINGS AND REFERENCED TO THIS DETAIL. TYPICAL HORIZONTAL WALL REINFORCING SHALL LAP WITH THE CORNER HORIZONTAL REINFORCING.

4. 90 DEGREE BENDS, UNLESS OTHERWISE SHOWN, SHALL BE ACI 318 STANDARD HOOKS.

5. LAP VERTICAL WALL BARS WITH DOWELS FROM BASE SLABS AND EXTEND INTO TOP FACE OF ROOF SLABS AND LAP WITH TOP SLAB REINFORCEMENT. PROVIDE A MINIMUM OF FOUR FULL HEIGHT VERTICAL BARS WITH MATCHING DOWELS AT WALL ENDS, CORNERS AND INTERSECTIONS WITH SIZE TO MATCH TYPICAL VERTICAL REINFORCING STEEL SHOWN OR REQUIRED BY NOTES ABOVE.

6. LOCATE SLAB AND BEAM TOP BAR SPLICES AT MIDSPAN AND BOTTOM BAR SPLICES AT SUPPORTS.

7. REINFORCEMENT BENDS AND LAPS, UNLESS OTHERWISE NOTED, SHALL SATISFY THE FOLLOWING MINIMUM REQUIREMENTS:

CONCRETE DESIGN STRENGTH = 4,000 PSI **		GRADE 60 REINFORCING STEEL								
BAR SIZE		#3	#4	#5	#6	#7	#8	#9	#10	#11
LAP SPLICE LENGTH										
SPACING<6"	TOP BAR *	1'-4"	2'-0"	3'-0"	4'-0"	5'-10"	6'-8"	7'-7"	8'-6"	9'-5"
	OTHER BAR	1'-4"	1'-7"	2'-4"	3'-1"	4'-6"	5'-2"	5'-10"	6'-7"	7'-3"
SPACING≥6"	TOP BAR *	1'-4"	1'-6"	2'-0"	2'-5"	3'-6"	4'-0"	5'-0"	6'-2"	7'-5"
	OTHER BAR	1'-4"	1'-4"	1'-7"	1'-10"	2'-9"	3'-1"	3'-10"	4'-9"	5'-8"
EMBEDMENT LENGTH										
SPACING<6"	TOP BAR *	1'-0"	1'-7"	2'-4"	3'-1"	4'-6"	5'-2"	5'-10"	6'-7"	7'-3"
	OTHER BAR	1'-0"	1'-3"	1'-9"	2'-5"	3'-6"	4'-0"	4'-6"	5'-1"	5'-7"
SPACING≥6"	TOP BAR *	1'-0"	1'-3"	1'-7"	1'-10"	2'-9"	3'-1"	3'-10"	4'-9"	5'-8"
	OTHER BAR	1'-0"	1'-0"	1'-3"	1'-5"	2'-1"	2'-5"	3'-0"	3'-8"	4'-5"

* TOP BARS SHALL BE DEFINED AS ANY HORIZONTAL BARS PLACED SUCH THAT MORE THAN 12 INCHES OF CONCRETE IS CAST IN THE MEMBER BELOW THE BAR IN ANY SINGLE POUR. HORIZONTAL WALL BARS ARE CONSIDERED TOP BARS.

** WHERE 3000 PSI CONCRETE IS USED, INCREASE ABOVE LENGTHS BY 16 PERCENT

CONCRETE

1. 28-DAY CAST-IN-PLACE CONCRETE STRENGTHS:

TYPICAL:	5000 PSI
CURBS AND SIDEWALKS:	3500 PSI
PAVEMENT:	4000 PSI

2. REINFORCING STEEL:
   TYPICAL: ASTM A615, GRADE 60

3. FABRICATION AND PLACEMENT OF REINFORCING STEEL SHALL BE IN ACCORDANCE WITH CRSI MSP-1 "MANUAL OF STANDARD PRACTICE" AND ACI 301 "SPECIFICATIONS FOR STRUCTURAL CONCRETE".

4. CONSTRUCTION JOINTS INDICATED ARE SUGGESTED LOCATIONS. CONTRACTOR MAY REVISE LOCATION OF JOINTS, SUBJECT TO SPECIFIED REQUIREMENTS. ADDITIONAL CONSTRUCTION JOINT LOCATIONS, INCLUDING ADDITIONAL REQUIRED FOR CONSTRUCTION, SHALL BE SUBMITTED FOR REVIEW BY ENGINEER.

5. CONTINUOUS WATERSTOP AS SPECIFIED SHALL BE INSTALLED IN ALL CONSTRUCTION JOINTS IN WALLS OF WATER HOLDING BASINS, CHANNELS, AND BELOW GRADE STRUCTURES, EXCEPT WHERE SPECIFICALLY NOTED OTHERWISE.

6. EXPANSION/ISOLATION/CONTROL JOINTS INDICATED ARE REQUIRED LOCATIONS. SHOULD CONTRACTOR DESIRE ADDITIONAL LOCATIONS OF SIMILAR JOINTS, PROVIDE NARRATIVE DESCRIPTION AND RATIONALE FOR THE ADDITIONAL JOINT LOCATIONS, AND SUBMIT FOR REVIEW BY ENGINEER PRIOR TO EXECUTING THE WORK.

7. ROUGHEN AND CLEAN CONSTRUCTION JOINTS IN WALLS AND SLABS AS SPECIFIED PRIOR TO PLACING ADJACENT CONC.

8. THE CONTRACTOR SHALL COORDINATE PLACEMENT OF OPENING, CURBS, DOWELS, SLEEVES, CONDUITS, BOLTS AND INSERTS PROIR TO PLACEMENT OF CONCRETE.

9. NO ALUMINUM CONDUIT OR PRODUCT CONTAINING ALUMINUM OR ANY OTHER MATERIAL INJURIOUS TO THE CONCRETE SHALL BE EMBEDDED IN THE CONCRETE.

10. CONDUIT SHALL NOT BE PLACED PARALLEL WITH BEAM OR COLUMN REINFORCEMENT UNLESS SPECIFICALLY INDICATED IN DRAWINGS.

11. ALL EXPOSED CONCRETE EDGES SHALL HAVE A FORMED 3/4" CHAMFER, UNLESS OTHERWISE NOTED OR SHOWN.

PRECAST PRESTRESSED CONCRETE MEMBERS

1. PRECAST PRESTRESSED CONCRETE MEMBERS SHALL HAVE A MINIMUM 28-DAY COMPRESSIVE STRENGTH OF 5000 PSI.

2. DESIGN PER PCI DESIGN HANDBOOK 6TH EDITION], ACI 318 AND ACI 550.1.

3. FABRICATE, TRANSPORT AND ERECT PER PCI DESIGN HANDBOOK 6TH EDITION, PCI ERECTOR'S MANUAL, AND ACI 304.

4. DESIGN PRECAST PRESTRESSED CONCRETE MEMBERS TO SUPPORT THE SUPERIMPOSED LOADS PROVIDED ON PLANS, TO MEET REQUIREMENTS STATED UNDER "DESIGN CRITERIA", AND FOR LOADS RESULTING FROM TRANSPORTATION AND ERECTION.

5. SUBMIT CALCULATIONS AND DRAWINGS STAMPED BY AN ENGINEER LICENSED IN THE STATE OF OKLAHOMA FOR REVIEW PRIOR TO FABRICATION.

6. CONTRACTOR SHALL BE RESPONSIBLE FOR ERECTION AND PLACEMENT, INCLUDING PICK UP POINT INSERTS AND LOCATIONS, SPECIAL PICK UP REINFORCING, STRONGBACKING, LOCATION AND SPACING OF SHIMS AND SIMILAR ITEMS.

7. VERIFY GEOMETRY OF INSERTS AND OPENINGS AS REQUIRED PER ARCHITECTURAL, MECHANICAL, AND ELECTRICAL DWGS.

PATHNAME: 001-G-0006_D3910200.dgn PLOT DATE: 6-MAY-2026 PLOT TIME: 13:59

VERIFY SCALE
BAR IS ONE INCH ON ORIGINAL DRAWING.
0 1"

REVISION	BY	DATE

LICENSED PROFESSIONAL ENGINEER
DAVID ANDREW JESSEP
23164
OKLAHOMA
05/11/2026

GENERAL STRUCTURAL NOTES 1

PROJECT NO. TMUA-W 24-05

A.B. JEWELL WTP RESIDUALS IMPROVEMENTS PHASE 2

CITY OF TULSA, OKLAHOMA
WATER AND SEWER DEPARTMENT

PLANS AND ESTIMATES PREPARED BY: Jacobs

PLAN SCALE: AS NOTED	DRAWN	SM	05/2026	APPROVED:
	DESIGNED	MN	05/2026	
PROFILE SCALE:	SURVEY			
HORIZONTAL: N/A	PROJ. MGR.	KMW	5/26	
	LEAD ENGR.	CGH	5/26	
VERTICAL N/A	FIELD MGR.		7/26	DESIGN MANAGER
FILE:	DRAWING: G-6			DATE: MAY 2026
ATLAS PAGE NO: 543				SHEET 6 OF 47 SHEETS

ISSUED FOR BID

CONCRETE MASONRY UNIT:

1. MORTAR: ASTM C270, TYPE S, HYDRATED. DO NOT USE MASONRY CEMENT.
2. GROUT: ASTM C476 COARSE GROUT. USE OF WATER REDUCERS OR SUPERPLASTICIZERS IS NOT PERMITTED.
3. CONCRETE MASONRY UNITS: ASTM C90, NORMAL WEIGHT, LINEAR SHRINKAGE SHALL NOT EXCEED 0.065 PERCENT.
4. REINFORCEMENT STEEL: ASTM A615, GRADE 60.
5. DESIGN f'm OF THE FINISHED ASSEMBLY SHALL BE 1900 PSI.
6. LAP VERTICAL REINFORCING BARS 48 BAR DIAMETERS WITH FOUNDATION DOWELS, EXCEPT BARS PLACED EACH FACE IN CMU SHALL BE LAPPED 60 BAR DIAMETERS. LAP ALL OTHER VERTICAL BARS 72 BAR DIAMETERS.STAGGER ADJACENT LAP SPLICES BY 24 INCHES WHEN SEPARATED BY 3 INCHES OR LESS.
7. PROVIDE FULL HEIGHT TYPICAL VERTICAL BARS AT EDGES OF OPENINGS AND FULL HEIGHT TYPICAL VERTICAL BARS IN 3 CELLS AT CORNERS. PROVIDE MATCHING DOWELS FOR VERTICAL BARD. PROVIDE REINFORCED LINTELS ABOVE AND REINFORCED BOND BEAMS BELOW OPENINGS. PROVIDE HORIZONTAL CORNER BARS WITH MINIMUM 2'-0 LEGS AT CORNERS. SEE DETAIL 0422-001 THROUGH 0422-006.
8. PROVIDE SPECIAL INSPECTION FOR MASONRY CONSTRUCTION INDICATED.
   A. MASONRY AT STEEL BEAM SEAT AREAS, EMBED AREAS, ROOF AND FLOOR LEVEL BOND BEAMS AND UNIQUE DETAIL AREAS.
   B. AS NOTED FOR ANY PART OR PORTION OF EACH INDIVIDUAL STRUCTURE.
9. MASONRY UNIT AND GROUT TESTING SHALL BE IN CONFORMANCE WITH 2012 IBC, " UNIT STRENGTH METHOD" TESTING WILL BE CONTRACTOR FURNISHED. OTHER IBC TEST METHODS MAY BE SUBMITTED AS AN ALTERNATIVE.
10. PROVIDE MATCHING FOUNDATION DOWELS FOR ALL TYPICAL AND ADDITIONAL VERTICAL BARS.
11. THE MINIMUM REINFORCING FOR SPECIAL REINFORCED CONCRETE BLOCK WALLS SHALL BE AS FOLLOWS. PROVIDE LARGER SIZES AND MORE REINFORCING IN SECTIONS OF WALLS WHERE REQUIRED BY THE DETAILS ON THE DRAWINGS OR BY THE SPECIFICATIONS.

WALL THICKNESS	VERTICAL REINFORCING	HORIZONTAL REINFORCING	LOCATION
8"	#6@32"	#5@32"	CENTERED

* EXCEPT WITH BOND BEAMS AT TOP OF WALL AND BOTTOM OF WALL

12. DO NOT PLACE CONDUIT IN CELLS CONTAINING PARALLEL REINFORCEMENT.

MASONRY					
CONCRETE MASONRY	UNIT STRENGTH	ASTM C140	2105.1	ONE SAMPLE SET (6 FULL SIZE UNITS) PER 5,000 SQ FT. DURING CONSTRUCTION	OWNER'S TESTING AGENCY
MASONRY	COMPREHENSIVE STRENGTH OF GROUT	ASTM C1019	2105.1	THREE SAMPLES PRIOR TO CONSTRUCTION	OWNER'S TESTING AGENCY
MASONRY	PRISM	ASTM C1314	2105.1	TEST THREE PRISMS PRIOR TO CONSTRUCTION	OWNER'S TESTING AGENCY

MASONRY LEVEL B							
1. FOR SELF-CONSOLIDATING GROUT: VERIFICATION OF SLUMP FLOW AND VISUAL STABILITY INDEX (VSI) AS DELIVERED TO THE PROJECT SITE.	1705.4	ACI 530: Sec. 3.1.2 ACI 530.1: Art. 1.5B.1.b.3	X			
2. VERIFICATION OF f'_m AND f'_{AAC} PRIOR TO CONSTRUCTION EXCEPT WHERE SPECIFICALLY EXEMPTED BY CODE	1705.4	ACI 530: Sec. 3.1.2 ACI 530.1: Art. 1.4B	X			
3. VERIFY COMPLIANCE WITH THE APPROVED SUBMITTALS	1705.4	ACI 530: Sec. 3.1.2 ACI 530.1: Art. 1.5	X			
4. AS MASONRY CONSTRUCTION BEGINS, THE FOLLOWING SHALL BE VERIFIED TO ENSURE COMPLIANCE:						
A. PROPORTIONS OF SITE-PREPARED MORTAR	1705.4	ACI 530: Sec. 3.1.2 ACI 530.1: Art. 2.1, 2.6A	X			
B. CONSTRUCTION OF MORTAR JOINTS	1705.4	ACI 530: Sec. 3.1.2 ACI 530.1: Art. 3.3B	X			
5. PRIOR TO GROUTING, VERIFY THAT THE FOLLOWING ARE IN COMPLIANCE:						
A. GROUT SPACE	1705.4	ACI 530: Sec. 3.1.2 ACI 530.1: Art. 3.2D, 3.2F	X			
B. GRADE, TYPE, AND SIZE OF REINFORCEMENT AND ANCHOR BOLTS, AND PRESTRESSING TENDONS AND ANCHORAGES	1705.4	ACI 530: Sec. 3.1.2, 6.1 ACI 530.1: Art. 2.4, 3.4	X			
C. PLACEMENT OF REINFORCEMENT, CONNECTORS, AND PRESTRESSING TENDONS AND ANCHORAGES	1705.4	ACI 530: Sec. 3.1.2, 6.1, 6.2.1, 6.2.6, 6.2.7 ACI 530.1: Art. 3.2E, 3.4, 3.6A	X			
D. PROPORTIONS OF SITE-PREPARED GROUT AND PRESTRESSING GROUT FOR BONDED TENDONS	1705.4	ACI 530: Sec. 3.1.2 ACI 530.1: Art. 2.6B, 2.4G.1.b	X			
E. CONSTRUCTION OF MORTAR JOINTS	1705.4	ACI 530: Sec. 3.1.2 ACI 530.1: Art. 3.3B	X			
6. VERIFY DURING CONSTRUCTION:						
A. SIZE AND LOCATION OF STRUCTURAL ELEMENTS	1705.4	ACI 530: Sec. 3.1.2 ACI 530.1: Art. 3.3F	X			
B. TYPE, SIZE AND LOCATION OF ANCHORS, INCLUDING OTHER DETAILS OF ANCHORAGE OF MASONRY TO STRUCTURAL MEMBERS, FRAMES, OR OTHER CONSTRUCTION	1705.4	ACI 530: Sec. 1.2.1(e), 3.1.2, 6.1.4.3, 6.2.1	X			
D. PREPARATION, CONSTRUCTION, AND PROTECTION OF MASONRY DURING COLD WEATHER (TEMP. BELOW 40 DEGREES F) OR HOT WEATHER (TEMP. ABOVE 90 DEGREES F)	1705.4	ACI 530: Sec. 3.1.2 ACI 530.1: Art. 1.8C, 1.8D	X			
7. OBSERVE PREPARATION OF GROUT SPECIMENS, MORTAR SPECIMENS, AND/OR PRISMS	1705.4	ACI 530: Sec. 3.1.2 ACI 530.1: Art. **1.4B.2.b.3 1.4B.3**	X			SEE TABLE 3 FOR **UNIT STRENGTH TESTS AND PRISM TESTS** FOR MASONRY

WELDING

1. WELDS SHALL CONFORM TO AMERICAN WELDING SOCIETY (AWS), LATEST EDITION:
   D1.1, STRUCTURAL WELDING CODE - STEEL
   D1.2, STRUCTURAL WELDING CODE - ALUMINUM
   D1.3, STRUCTURAL WELDING CODE - SHEET STEEL
   D1.4, STRUCTURAL WELDING CODE - REINFORCING STEEL
   D1.6, STRUCTURAL WELDING CODE - STAINLESS STEEL
2. REPAIR WELDS FOUND DEFECTIVE IN ACCORDANCE WITH AWS D1.1 5.26.
3. USE INTERMITTENT WELDS AT FIELD WELDS OF EMBED PLATES AND ANGLES TO AVOID SPALLING OR CRACKING OF THE EXISTING CONCRETE.
4. BUTT JOINT WELDS SHALL BE COMPLETE JOINT PENETRATION (CJP) UNLESS INDICATED OTHERWISE.

STRUCTURAL STEEL AND METAL FABRICATION

1. STRUCTURAL STEEL SHALL CONFORM TO THE FOLLOWING:

W-SHAPES	A992
MISCELLANEOUS SHAPES INCLUDING ANGLES, CHANNELS, PLATES, ETC.	A36
SQUARE OR RECTANGULAR STEEL TUBING	A500, GRADE B
STEEL PIPE	A53, GRADE B

2. STRUCTURAL STEEL SHALL BE FABRICATED AND ERECTED IN CONFORMANCE WITH THE AISC MANUAL OF STEEL CONSTRUCTION, CURRENT EDITION, AND CURRENT OSHA STANDARDS.
3. BOLTS SHALL BE HIGH STRENGTH BOLTS CONFORMING TO THE FOLLOWING EXCEPT WHERE SPECIFICALLY INDICATED OTHERWISE:

UNLESS SHOWN OTHERWISE	A325-N
STAINLESS STEEL	F593, AISI TYPE 316, CONDITION CW
GALVANIZED STEEL	F1554, GR 36 / A153
MACHINEBOLTS (MB)	A307

4. ITEMS TO BE EMBEDDED IN CONCRETE SHALL BE CLEAN AND FREE OF OIL, DIRT AND PAINT.
5. NO HOLES OTHER THAN THOSE SPECIFICALLY DETAILED SHALL BE ALLOWED THROUGH STRUCTURAL STEEL MEMBERS. NO CUTTING OR BURNING OF STRUCTURAL STEEL IS PERMITTED WITHOUT THE APPROVAL OF THE ENGINEER.

DEFERRED SUBMITTALS

1. DEFERRED SUBMITTALS ARE THOSE PORTIONS OF THE DESIGN WHICH ARE NOT SUBMITTED AT THE TIME OF PERMIT APPLICATION AND WHICH ARE TO BE SUBMITTED TO THE PERMITTING AGENCY FOR ACCEPTANCE PRIOR TO INSTALLATION OF THAT PORTION OF THE WORK.
2. THE FOLLOWING IS A LIST OF DEFERRED SUBMITTALS PER IBC SECTION 107.3.4.2 OF 2018 IBC THAT ARE EXPECTED TO CONTAIN STRUCTURAL CALCULATIONS OR SAFETY RELATED SYSTEM INFORMATION FOR REVIEW TO MEET BUILDING PERMITTING REQUIREMENTS FOR DESIGNED SYSTEMS. PRIOR TO INSTALLATION OF THE INDICATED STRUCTURAL ELEMENT, EQUIPMENT, DISTRIBUTION SYSTEM, OR COMPONENT OR ITS ANCHORAGE, THE CONTRACTOR SHALL SUBMIT THE REQD CALCULATIONS AND SUPPORTING DATA AND DRAWINGS FOR REVIEW AND ACCEPTANCE BY THE ENGINEER. ADDITIONALLY, ACCEPTANCE INDICATED ON THE ENGINEER'S COMMENT FORM, ALONG WITH THE COMPLETED, FINAL SUBMITTAL SHALL THEN BE FILED BY THE CONTRACTOR AND ACKNOWLEDGED AS ACCEPTED BY THE PERMITTING AGENCY PRIOR TO INSTALLATION OF THESE ITEMS.

SPECIFICATION SECTION	ITEM
40 05 15	PIPING SUPPORT SYSTEMS
44 16 13	BELT CONVEYOR SYSTEM
OTHER	ANY EQUIPMENT OR COMPONENT IN WHICH A TECHNICAL SPECIFICATION REQUIRES SUBMITTAL OF EQUIPMENT OR ANCHORAGE SYSTEM CALCULATIONS

GENERAL
STRUCTURAL NOTES 2

PROJECT NO. TMUA-W 24-05

A.B. JEWELL WTP RESIDUALS
IMPROVEMENTS PHASE 2

CITY OF TULSA, OKLAHOMA
WATER AND SEWER DEPARTMENT

PLANS AND ESTIMATES PREPARED BY:
Jacobs

VERIFY SCALE
BAR IS ONE INCH ON ORIGINAL DRAWING.
0 1"

REVISION	BY	DATE

LICENSED PROFESSIONAL ENGINEER
DAVID ANDREW JESSEP
23164
OKLAHOMA
05/11/2026

PLAN SCALE: AS NOTED	DRAWN	SM	05/2026
	DESIGNED	MN	05/2026
PROFILE SCALE:	SURVEY		
HORIZONTAL: N/A	PROJ. MGR.	KMH	6/26
	LEAD ENGR.	CEW	6/26
VERTICAL N/A	FIELD MGR.	[illegible]	7/26

APPROVED:
DESIGN MANAGER

FILE: DRAWING: G-7
DATE: MAY 2026
ATLAS PAGE NO: 543
SHEET 7 OF 47 SHEETS

ISSUED FOR BID

PATHNAME: 001-G-0007_D3910200.dgn PLOT DATE: 6-MAY-2026 PLOT TIME: 13:59

STATEMENT OF SPECIAL INSPECTIONS

GENERAL NOTES:

1. THE STATEMENT OF SPECIAL INSPECTIONS DRAWINGS PROVIDE PROJECT COMPLIANCE WITH THE PROVISIONS OF THE INTERNATIONAL BUILDING CODE(IBC) CHAPTER 17 FOR SPECIAL INSPECTION, STRUCTURAL OBSERVATION, AND TESTING FOR WIND AND SEISMIC RESISTANCE AS APPLICABLE. EXCEPT WHERE OTHERWISE NOTED, THIS INSPECTION IS OWNER FURNISHED.
2. STANDARD SPECIAL INSPECTION REQUIREMENTS FOR NONSTRUCTURAL COMPONENTS ARE CONTAINED IN TABLE 1.
3. STANDARD SPECIAL INSPECTION REQUIREMENTS FOR STRUCTURAL COMPONENTS, REGARDLESS OF WIND OR SEISMIC DESIGN CATEGORIES, ARE CONTAINED IN TABLE 2.
4. STANDARD TESTING REQUIREMENTS FOR STRUCTURAL COMPONENTS ARE CONTAINED IN TABLE 3.
5. FOR ADDITIONAL REQUIREMENTS, REFER TO SPECIFICATION SECTION 01 45 33, SPECIAL INSPECTION AND TESTING.

   THESE INCLUDE:
   A. CONTRACTOR'S REQUIREMENTS TO PROVIDE ACCESS TO THE WORK FOR REQUIRED INSPECTIONS, AND TO PROVIDE NOTICE OF REQUIRED INSPECTIONS.
   B. DEFINITIONS AND TERMINOLOGY USED IN THIS STATEMENT OF SPECIAL INSPECTIONS.

SPECIAL INSPECTION:

1. SPECIAL INSPECTION WILL BE IN ACCORDANCE WITH IBC SECTION 1705 TOGETHER WITH LOCAL AND STATE AMENDMENTS. REFER TO THE TABLES CONTAINED ON THESE GENERAL SHEETS FOR PROJECT SPECIFIC INSPECTION TYPES AND FREQUENCIES.
2. SPECIAL INSPECTIONS WILL BE PROVIDED BY A CERTIFIED OR QUALIFIED INSPECTOR AND ASSOCIATED TESTING WILL BE PERFORMED BY AN APPROVED ACCREDITED INDEPENDENT AGENCY. THE OWNER WILL SECURE AND PAY FOR THE SERVICES OF THE AGENCY TO PERFORM ALL SPECIAL INSPECTION AND ASSOCIATED TESTS. INSPECTORS FOR EACH SYSTEM AND MATERIAL WILL BE INTERNATIONAL CODE COUNCIL (ICC) CERTIFIED OR OTHERWISE APPROVED BY THE BUILDING OFFICIAL.
3. THE SPECIAL INSPECTOR WILL OBSERVE THE INDICATED WORK FOR COMPLIANCE WITH THE APPROVED CONTRACT DOCUMENTS AND SUBMIT RECORDS OF INSPECTION. ALL DISCREPANCIES WILL BE BROUGHT TO THE IMMEDIATE ATTENTION OF THE CONTRACTOR FOR CORRECTION.
4. SPECIAL INSPECTION AND ASSOCIATED TESTING REPORTS WILL BE SUBMITTED TO THE ENGINEER, CONTRACTOR, BUILDING OFFICIAL, AND OWNER WITHIN ONE WEEK OF INSPECTION OR WITHIN ONE WEEK OF TEST COMPLETION. INSPECTIONS FOR WHICH REPORTING WILL BE REQUIRED ARE NOTED IN THE TABLES CONTAINED ON THIS STATEMENT OF SPECIAL INSPECTIONS.
5. AT THE CONCLUSION OF CONSTRUCTION, A FINAL REPORT DOCUMENTING REQUIRED SPECIAL INSPECTIONS AND CORRECTION OF PREVIOUSLY NOTED DISCREPANCIES WILL BE SUBMITTED.

STRUCTURAL OBSERVATION CONTINUED:

1. STRUCTURAL OBSERVATION WILL BE PERFORMED BY A REGISTERED DESIGN PROFESSIONAL FOR GENERAL CONFORMANCE TO THE APPROVED CONSTRUCTION DOCUMENTS. STRUCTURAL OBSERVATION DOES NOT INCLUDE OR WAIVE THE RESPONSIBILITY FOR ANY REQUIRED SPECIAL INSPECTIONS OR INSPECTIONS BY THE BUILDING OFFICIAL.
2. STRUCTURAL OBSERVATION REPORTS, NOTING ANY DEFICIENCIES IN OBSERVED CONSTRUCTION WILL BE DELIVERED TO THE CONTRACTOR, BUILDING OFFICIAL AND OWNER FOLLOWING EACH OBSERVATION. THE CONTRACTOR WILL BE NOTIFIED ON-SITE OR BY PHONE OR EMAIL WITHIN 24 HRS UPON FINDING DEFICIENCIES.
3. AT THE CONCLUSION OF CONSTRUCTION, A WRITTEN STATEMENT WILL BE PROVIDED TO VERIFY THAT THE STRUCTURAL OBSERVATION SITE VISITS WERE MADE AND WHETHER THERE REMAIN ANY STRUCTURAL DEFICIENCIES THAT HAVE NOT BEEN RESOLVED.
4. STRUCTURAL OBSERVATION WILL INCLUDE VISUAL OBSERVATION OF THE STRUCTURAL SYSTEM AT SIGNIFICANT CONSTRUCTION STAGES AND AT COMPLETION OF THE STRUCTURAL SYSTEM FOR EACH STRUCTURE CONTAINED IN THE WORK. THE CONTRACTOR SHALL SCHEDULE AND FACILITATE STRUCTURAL OBSERVATION PER THE STRUCTURAL OBSERVATION TABLE.

GEOTECHNICAL OBSERVATION:

1. ALL FOUNDATION BEARING SURFACES SHALL BE INSPECTED BY GEOTECHNICAL ENGINEER PRIOR TO PLACEMENT OF FORMWORK OR REINFORCING STEEL. ADDITIONAL SPECIAL INSPECTION REQUIREMENTS ARE LISTED IN TABLE 1.
2. GEOTECHNICAL TESTING REQUIREMENTS ARE LISTED IN TABLE 3.

SPECIAL INSPECTIONS FOR WIND RESISTANCE:

1. STATEMENT OF SPECIAL INSPECTIONS PLAN REQUIREMENTS FOR WIND RESISTANCE IN ACCORDANCE WITH IBC ARE NOT APPLICABLE TO THIS PROJECT.

SPECIAL INSPECTION FOR SEISMIC RESISTANCE:

1. STATEMENT OF SPECIAL INSPECTIONS PLAN REQUIREMENTS FOR SEISMIC RESISTANCE IN ACCORDANCE WITH IBC ARE NOT APPLICABLE TO THIS PROJECT.

STRUCTURAL OBSERVATION TABLE

	SYSTEM	STAGE	ITEMS	COMMENTS
1.	FOUNDATION SLAB OF STRUCTURE	PRIOR TO FIRST CONCRETE PLACEMENT OF FIRST SECTION WHEN ITEMS CAN STILL BE REVISED	REINFORCING STEEL, CONCRETE AND MASONRY WALL DOWELS, WATERSTOPS, EMBEDS AND SIMILAR ITEMS	NOTE 1
2.	CONCRETE WALLS OF STRUCTURE	PRIOR TO FIRST CONCRETE PLACEMENT OF FIRST SECTION WHEN ITEMS CAN STILL BE REVISED	REINFORCING STEEL, WALL DOWELS, WATERSTOPS, EMBEDS AND SIMILAR ITEMS	NOTE 1
3.	ELEVATED CONCRETE SLABS AND BEAMS PRIOR TO CONCRETE PLACEMENT	PRIOR TO FIRST CONCRETE PLACEMENT OF FIRST SECTION WHEN ITEMS CAN STILL BE REVISED	REINFORCING STEEL, WALL DOWELS, WATERSTOPS, EMBEDS AND SIMILAR ITEMS	NOTE 1
4.	STRUCTURAL STEEL FRAMING	DURING INITIAL CONSTRUCTION OF STEEL CONVEYOR SUPPORTS	MEMBER LOCATIONS AND CONFIGURATIONS, BOLTED AND WELDED CONNECTIONS, AND SIMILAR ITEMS	NOTE 1
5.	AT ADDITIONAL TIMES DURING CONSTRUCTION AT WHICH THE ENGINEER OF RECORD OR OWNER DEEM THE NEED FOR ADDITIONAL STRUCTURAL OBSERVATION			NOTE 1
6.	AT SUBSTANTIAL COMPLETION OF PRIMARY STRUCTURAL SYSTEM FOR DETERMINATION OF FINAL CONDITION OF STRUCTURE			NOTE 1

NOTES:

1. PERIODIC INSPECTION IS DEFINED AS INSPECTION BY THE SPECIAL INSPECTOR OF ALL MATERIALS AND SYSTEMS, IN SOME CASES PERFORMED DURING THEIR PLACEMENT AND IN ALL CASES PERFORMED UPON COMPLETION OF THEIR PLACEMENT. THE COMPLETION INSPECTION SHALL BE PERFORMED SO THAT WORK CAN BE CORRECTED PRIOR TO OTHER RELATED WORK PROCEEDING AND COVERING INSPECTED WORK.

GENERAL
STATEMENT OF SPECIAL INSPECTIONS 1

PROJECT NO. TMUA-W 24-05

A.B. JEWELL WTP RESIDUALS IMPROVEMENTS PHASE 2

CITY OF TULSA, OKLAHOMA
WATER AND SEWER DEPARTMENT

VERIFY SCALE
BAR IS ONE INCH ON ORIGINAL DRAWING.
0 1"

PLANS AND ESTIMATES PREPARED BY: Jacobs

REVISION	BY	DATE

PLAN SCALE: AS NOTED
PROFILE SCALE:
HORIZONTAL: N/A
VERTICAL N/A

DRAWN	SM	05/2026
DESIGNED	MN	05/2026
SURVEY		
PROJ. MGR.	KMN	6/26
LEAD ENGR.	CEW	6/26
FIELD MGR.		6/26

APPROVED:
DESIGN MANAGER
FILE: DRAWING: G-8
DATE: MAY 2026
ATLAS PAGE NO: 543
SHEET 8 OF 47 SHEETS

LICENSED PROFESSIONAL ENGINEER
DAVID ANDREW JESSEP
23164
OKLAHOMA
05/11/2026

ISSUED FOR BID

PATHNAME: 001-G-0008_D3910200.dgn PLOT DATE: 6-MAY-2026 PLOT TIME: 14:00

TABLE 2
REQUIRED STRUCTURAL SPECIAL INSPECTION
REFER TO SPECIFICATION SECTION 01 45 33

SYSTEM	2015 IBC CODE REFERENCE	REFERENCED STANDARD	PERIODIC OWNER FURNISHED SPECIAL INSPECTION (SEE NOTE 1)	CONTINUOUS OWNER FURNISHED SPECIAL INSPECTION	COMMENTS	TESTING FOR SPECIAL INSPECTION
CONCRETE						
1. INSPECT REINFORCING STEEL AND VERIFY PLACEMENT	1705.3	ACI 318: Ch. 20, 25.2, 25.3, 26.5.1-26.5.3	X			
2. INSPECTION OF ANCHORS CAST IN CONCRETE	1705.3	ACI 318: 17.8.2	X			
3. INSPECTION OF ANCHORS INSTALLED IN HARDENED CONCRETE	1705.3	ACI 318: 17.8.2, ICC-ES EVALUATION REPORTS				
4. VERIFY USE OF REQUIRED DESIGN MIX	1705.3, 1904.1, 1904.2, 1908.2, 1908.3	ASTM C 172, ASTM C 31, ACI 318: 26.4.5, 26.12				
5. AT THE TIME FRESH CONCRETE IS SAMPLED TO FABRICATE SPECIMENTS FOR STRENGTH TESTS, PERFORM SLUMP AND AIR CONTENT TESTS, AND DETERMINE THETEMPERATURE OF THE CONCRETE	1705.3	ASTM C 172, ASTM C 31, ACI 318: 26.4.5, 26.12				SEE TABLE 3 FOR CONCRETE TEST REQUIREMENTS
6. INSPECT CONCRETE PLACEMENT FOR PROPER APPLICATION TECHNIQUES	1705.3	ACI 318: 26.4.5		X		
7. INSPECTION FOR MAINTENANCE OF SPECIFIED CURING TEMPERATURE AND TECHNIQUES	1705.3	ACI 318: 26.49	X			

TABLE 2
REQUIRED STRUCTURAL SPECIAL INSPECTION
REFER TO SPECIFICATION SECTION 01 45 33

SYSTEM	2015 IBC CODE REFERENCE	REFERENCED STANDARD	PERIODIC OWNER FURNISHED SPECIAL INSPECTION (SEE NOTE 1)	CONTINUOUS OWNER FURNISHED SPECIAL INSPECTION	COMMENTS	TESTING FOR SPECIAL INSPECTION
CONCRETE						
8. INSPECT FORMWORK FOR SHAPE, LOCATION AND DIMENSIONS OF THE CONC MEMBER BEING FORMED	1705.3	ACI 318: 26.10.1(b)	X			
9. VERIFY PROPER INSTALLATION OF MECHANICAL REINFORCING SPLICES AND CONNECTIONS	1705.1.1 ITEM 3, 1705.3	ICC-ES EVALUATION REPORTS	X			
STEEL						
1. MATERIAL VERIFICATION OF HIGH-STRENGTH BOLTS, NUTS, AND WASHERS:						
A. IDENTIFICATION MARKINGS TO CONFORM TO ASTM STANDARDS SPECIFIED IN THE APPROVED CONSTRUCTION DOCUMENTS	1705.2.1, 2203.1	Applicable ASTM Material Standards	X			
B. MANUFACTURER'S CERTIFIED TEST REPORTS	1705.2.1	AISC 360: Sec. N3.2, N5.2	X			
2. PRIOR TO BOLTING, VERIFY THAT THE FOLLOWING ARE IN COMPLIANCE		AISC 360: Sec. N3.2, N5.6 Applicable ASTM Material Standards	X			
A. FASTENERS MARKED IN ACCORDANCE WITH ASTM REQUIREMENTS	1705.2.1					
3. VERIFY DURING BOLTING:						
A. FASTENER ASSEMBLIES, OF SUITABLE CONDITION, PLACED IN ALL HOLES AND WASHERS (IF REQUIRED) ARE POSITIONED AS REQUIRED	1705.2.1	AISC 360: Sec. N5.6				
4. PRIOR TO WELDING, VERIFY THAT THE FOLLOWING ARE IN COMPLIEANCE:						
A. APPROVED WELDING PROCEDURE SPECIFICATIONS (WPS) AVAILABLE TO WELDERS AND WELDING INSPECTOR(S)	1705.2.1	AWS D1.1	X			
B. WELDER QUALIFICATIONS AND JOINT FIT-UP	1705.2.1	AWS D1.1	X			
5. VERIFY DURING WELDING:						
A. CONTROL AND HANDLING OF WELDING CONSUMABLES	1705.2.1	AWS D1.1	X			
B. ENVIRONMENTAL CONDITIONS	1705.2.1	AWS D1.1	X			
C. COMPLIANCE WITH WPS REQUIREMENTS	1705.2.1	AWS D1.1	X			
6. AFTER WELDING, VERIFY THE FOLLOWING:						
A. SIZE, LENGTH AND LOCATION OF WELDS	1705.2.1	AWS D1.1	X			
B. WELDS MEET VISUAL ACCEPTANCE CRITERIA	1705.2.1	AWS D1.1	X			

1. PERIODIC INSPECTION IS DEFINED AS INSPECTION BY THE SPECIAL INSPECTOR OF ALL MATERIALS AND SYSTEMS, IN SOME CASES PERFORMED DURING THEIR PLACEMENT AND IN ALL CASES PERFORMED UPON COMPLETION OF THEIR PLACEMENT. THE COMPLETION INSPECTION SHALL BE PERFORMED SO THAT WORK CAN BE CORRECTED PRIOR TO OTHER RELATED WORK PROCEEDING AND COVERING INSPECTED WORK.

2. VISUAL INSPECTION IS THE RESPONSIBILITY OF THE CONTRACTOR'S WELDING INSPECTOR(S) AND IS NOT CONSIDERED SPECIAL INSPECTION. CONTRACTOR MUST PROVIDE A QUALIFIED WELDING INSPECTOR TO OVERSEE CONTRACTOR'S WELDING OPERATIONS, AS REQUIRED BY AWS D1.1, SECTIONS 6.1.2 & 6.6, SPEC. SECTION 05 05 23 AND REFERENCED WELDING CODES.

TABLE 3
TESTING FOR REQUIRED SPECIAL INSPECTION
REFER TO SPECIFICATION SECTION 01 45 33

MATERIAL	TYPE OR SCOPE	STANDARD	2015 IBC CODE REFERENCE	FREQUENCY	BY WHOM	COMMENTS
GEOTECHNICAL						
COMPACTED FILL	GRADATION	ASTM C117, C136	1705.6	SECTION 31 23 23, FILL AND BACKFILL	OWNER'S TESTING AGENCY	
COMPACTED FILL	DENSITY	ASTM D1556	1705.6	SECTION 31 23 23, FILL AND BACKFILL	OWNER'S TESTING AGENCY	
COMPACTED FILL	COMPACTION	ASTM D698, D1557	1705.6	SECTION 31 23 13, SUBGRADE PREPARATION	OWNER'S TESTING AGENCY	
PREPARED SUBGRADE	DENSITY	ASTM D698, D1557	1705.6	SECTION 31 23 13, SUBGRADE PREPARATION	OWNER'S TESTING AGENCY	
CONCRETE						
CONCRETE	STRENGTH	ASTM C39	1705.3	ONCE EACH DAY, BUT NOT LESS THAN ONE SAMPLE FOR EACH 150 CUBIC YARDS OR 5,000 SFT OF WALLS OR SLABS PLACED	OWNER'S TESTING AGENCY	
CONCRETE	SLUMP	ASTM C143, C94	1705.3	ONE SAMPLE PER STRENGTH TEST	OWNER'S TESTING AGENCY	
CONCRETE	AIR CONTENT	ASTM C231, C94	1705.3	ONE SAMPLE PER STRENGTH TEST	OWNER'S TESTING AGENCY	
CONCRETE	TEMPERATURE	ASTM C1064	1705.3	ONE SAMPLE PER STRENGTH TEST	OWNER'S TESTING AGENCY	

LICENSED PROFESSIONAL ENGINEER
DAVID ANDREW JESSEP
23164
OKLAHOMA
05/11/2026

VERIFY SCALE
BAR IS ONE INCH ON ORIGINAL DRAWING.
0 1"

REVISION	BY	DATE

GENERAL
STATEMENT OF SPECIAL INSPECTIONS 2

PROJECT NO. TMUA-W 24-05

A.B. JEWELL WTP RESIDUALS IMPROVEMENTS PHASE 2

CITY OF TULSA, OKLAHOMA
WATER AND SEWER DEPARTMENT

PLANS AND ESTIMATES PREPARED BY:
Jacobs

PLAN SCALE: AS NOTED	DRAWN	SM	05/2026	APPROVED:
	DESIGNED	MN	05/2026	
PROFILE SCALE:	SURVEY			
HORIZONTAL: N/A	PROJ. MGR.		6/26	
VERTICAL N/A	LEAD ENGR.		6/24	
	FIELD MGR.		6/26	DESIGN MANAGER
FILE:	DRAWING: G-9			DATE: MAY 2026
ATLAS PAGE NO: 543				SHEET 9 OF 47 SHEETS

ISSUED FOR BID

PATHNAME: 001-G-0009_D3910200.dgn PLOT DATE: 6-MAY-2026 PLOT TIME: 14:00

PIPE AND FITTING SYMBOLS

DOUBLE LINE | SINGLE LINE

- EXISTING PIPE
- NEW PIPE
- EXISTING PIPE TO BE ABANDONED
- EXISTING PIPE TO BE REMOVED
- WELDED JOINT
- GROOVED END JOINT
- FLANGED JOINT
- MECHANICAL JOINT
- BELL & SPIGOT JOINT (LEADED)
- HUB & SPIGOT JOINT (RUBBER GASKET)
- BALL JOINT
- ADAPTER SIDE
  GROOVED END ADAPTER FLANGE
- FLANGED COUPLING ADAPTER
- FLANGED COUPLING ADAPTER WITH THRUST TIES
- FLEXIBLE COUPLING
- FLEXIBLE COUPLING WITH THRUST TIES
- STEEL BELLOWS EXP JOINT
- ELASTOMER BELLOWS EXP JOINT
- ELBOW UP
- ELBOW DOWN
- TEE UP
- TEE DOWN
- LATERAL UP
- LATERAL DOWN
- CONCENTRIC REDUCER
- ECCENTRIC REDUCER
- REDUCING BUSHING
- UNION

MISCELLANEOUS PIPING SYMBOLS

- STRAINER
- SIGHT GLASS
- FLEXIBLE (ELASTOMER) PIPE CONNECTION
- GAUGE WITH COCK
- THERMOMETER
- ROTAMETER
- PIG LAUNCHER
- PIG CATCHER
- PS 26-1-2 — TYPICAL INSTRUMENT SYMBOL (SEE I&C LEGEND)

PIPING DESIGNATION

EXAMPLE: 12-F-PVC

12 - F - PVC

- PIPE MATERIAL IDENTIFICATION LEGEND
- PIPE USE IDENTIFICATION LEGEND
- NOMINAL PIPE DIAMETER

PIPE AND FITTING END PATTERNS

B	BELL	PE	PLAIN END
S	SPIGOT	GE	GROOVED END
F	FLANGE	MJ	MECHANICAL JOINT
		PRJ	PROPRIETARY RESTRAINED JOINT

EXAMPLE: F / MJ PE

- CAP
- ANCHOR
- ELBOW, 90 DEGREE
- CROSS
- TEE
- ELBOW, 45 DEGREE
- LATERAL

NOTES:
1. ONLY FLANGED END CONNECTIONS ARE SHOWN HERE FOR DOUBLE LINE FITTINGS. FITTINGS WITH OTHER END PATTERNS ARE SHOWN SIMILARLY ON THE CONSTRUCTION DRAWINGS. ALSO SEE PIPING SPECIFICATIONS.
2. SYMBOLS SHOWN HERE FOR SINGLE LINE FITTINGS ARE GENERIC ONLY. REFER TO PIPING SPECIFICATIONS FOR SPECIFIC END CONNECTIONS FOR SINGLE LINE PIPE AND FITTINGS.
3. EXISTING PIPE AND EQUIPMENT IS SHOWN LIGHT-LINED AND/OR SCREENED AND IS NOTED AS EXISTING. NEW PIPING AND EQUIPMENT IS SHOWN HEAVY-LINED.
4. SEE DRAWING G-14 FOR FLOWSTREAM ID'S

VALVE SYMBOLS

COMMON | ALTERNATE

- GATE
- K — KNIFE GATE
- BUTTERFLY
- GLOBE
- BALL
- V — VEE-BALL
- SEATING PORT
- ECCENTRIC PLUG
- PLUG OR COCK
- NEEDLE
- DIAPHRAGM — (3D)
- PINCH
- SWING CHECK — (3D)
- BALL CHECK
- WAFER STYLE DOUBLE DISC CHECK VALVE
- HOSE VALVE (HV- X) OR (V-X)
  X = NO. IN SPECS
- S — SAMPLE
- MUD
- PRESSURE RELIEF
- AIR AND/OR VACUUM RELEASE
- REGULATED SIDE
- PRESSURE CONTROL
- MULTI-PORT VALVE (BALL VALVE SHOWN FOR OTHER VALVE TYPES, APPROPRIATE VALVE SYMBOL SHOWN.) ARROWS INDICATE FLOW PATTERN. SEATING PORTS ARE IMPLIED BY INDICATED FLOW PATTERN.
- FIRE HYDRANT

VALVE DESIGNATIONS

MANUAL VALVES AND CHECK VALVES

8"-V500

- SIZE OF VALVE
- VALVE DESIGNATION
- VALVE TYPE, SEE SPECIFICATIONS

CONTROL VALVES

X / X

- FLOW DIRECTION
- VALVE SYMBOL

BUBBLE WITH XV OR XCV DESIGNATION SHOWN ON P&ID
WHERE: X = PROCESS VARIABLE

ACTUATOR SYMBOLS

- PZ — PNEUMATIC W/POSITIONER
- PS — PNEUMATIC W/SOLENOID
- E — ELECTRIC
- EZ — ELECTRIC W/POSITIONER
- H — HYDRAULIC
- MANUAL
- S — SOLENOID

GATE SYMBOLS

EL VIEW | PLAN VIEW

- SLUICE
- BUTTERFLY
- FLAP
- SHEAR
- FABRICATED SLIDE

PLANT AIR LEGEND

- PB — PULL BOX
- J-XXX-YY — JUNCTION BOX (XXX = FACILITY NO.; YY = BOX NO.)
- AP — AIR PURGE SET
- HARD COP — COPPER TUBING
- P — PLASTIC TUBING
- 2" CND — CONDUIT SIZE
- 3/8"(X) — PLASTIC TUBE SIZE X = NO. OF ," PLASTIC TUBES
- INSTRUMENT AIR - COPPER TUBING
- X — INSTRUMENT AIR TUBING BUNDLE X = NO. OF ," PLASTIC TUBES
- XX — AIR SET XX = SUPPLY PRESSURE IN PSIG
- FILTER/ REGULATOR/ GAUGE SET

VERIFY SCALE
BAR IS ONE INCH ON ORIGINAL DRAWING.
0 1"

OKLAHOMA PROFESSIONAL ENGINEER — B. LUKE LENARD 28364 — LICENSED — 05/11/2026

REVISION	BY	DATE

GENERAL
PROCESS MECHANICAL LEGEND

PROJECT NO. TMUA-W 24-05

A.B. JEWELL WTP RESIDUALS IMPROVEMENTS PHASE 2

CITY OF TULSA, OKLAHOMA
WATER AND SEWER DEPARTMENT

PLANS AND ESTIMATES PREPARED BY: Jacobs

PLAN SCALE: AS NOTED	DRAWN	SM	05/2026	APPROVED:
	DESIGNED	BS	05/2026	
PROFILE SCALE:	SURVEY			
HORIZONTAL: N/A	PROJ. MGR.			
	LEAD ENGR.			
VERTICAL N/A	FIELD MGR.			DESIGN MANAGER
FILE:	DRAWING: G-10			DATE: MAY 2026
ATLAS PAGE NO: 543				SHEET 10 OF 47 SHEETS

ISSUED FOR BID

PATHNAME: 001-G-0010_D3910200.dgn PLOT DATE: 6-MAY-2026 PLOT TIME: 13:59

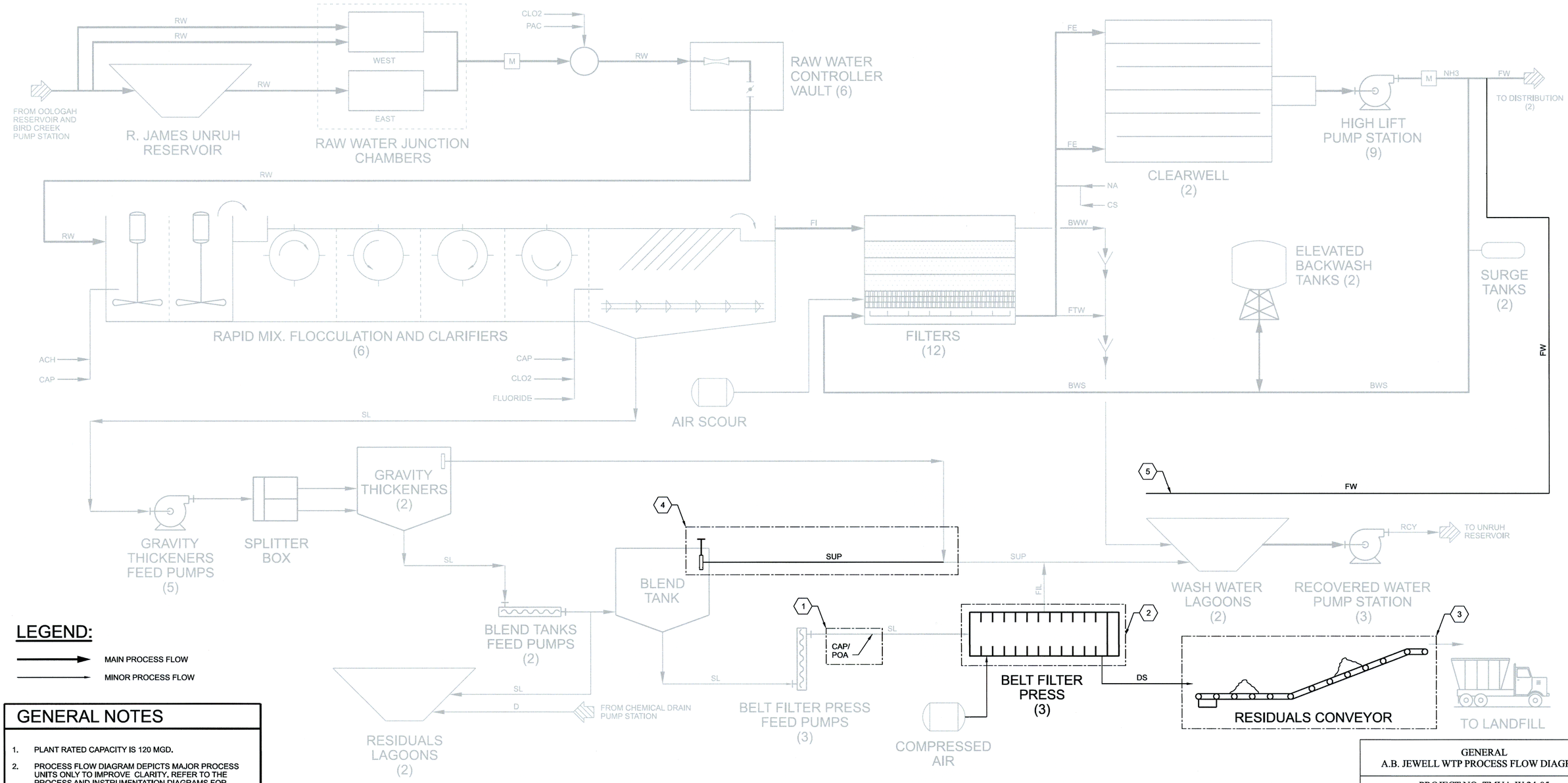

LEGEND:

MAIN PROCESS FLOW

MINOR PROCESS FLOW

GENERAL NOTES

1. PLANT RATED CAPACITY IS 120 MGD.
2. PROCESS FLOW DIAGRAM DEPICTS MAJOR PROCESS UNITS ONLY TO IMPROVE CLARITY. REFER TO THE PROCESS AND INSTRUMENTATION DIAGRAMS FOR DETAILS.
3. (X) DEPICTS NUMBER OF PROCESS UNITS.

KEY NOTES

1. UPGRADES TO THE DRY POLYMER SYSTEM
2. REFURBISHMENT OF ALL THREE BFP'S, AIR PIPING, WASHDOWN PIPING AND APPUTENANCES
3. DEMO AND INSTALL OF NEW BELT CONVEYOR AND RESIDUAL HOLDING AREA
4. INSTALLATION OF BLEND TANK DECANT VALVE AND PIPING
5. INSTALLATION OF WATER LINE AROUND LOWER LAGOONS

PATHNAME: 001-G-0011_D3910200.dgn PLOT DATE: 6-MAY-2026 PLOT TIME: 14:00

VERIFY SCALE

BAR IS ONE INCH ON ORIGINAL DRAWING.
0 1"

REVISION	BY	DATE

OKLAHOMA LICENSED PROFESSIONAL ENGINEER
B. LUKE LENARD
28364
05/11/2026

GENERAL
A.B. JEWELL WTP PROCESS FLOW DIAGRAM

PROJECT NO. TMUA-W 24-05

A.B. JEWELL WTP RESIDUALS IMPROVEMENTS PHASE 2

CITY OF TULSA, OKLAHOMA
WATER AND SEWER DEPARTMENT

PLANS AND ESTIMATES PREPARED BY:
Jacobs

PLAN SCALE: AS NOTED	DRAWN	SM	05/2026	APPROVED:
	DESIGNED	BS	05/2026	
PROFILE SCALE:	SURVEY			
HORIZONTAL: N/A	PROJ. MGR.			
VERTICAL N/A	LEAD ENGR.			DESIGN MANAGER
	FIELD MGR.			
FILE:	DRAWING: G-11			DATE: MAY 2026
ATLAS PAGE NO: 543				SHEET 11 OF 47 SHEETS

ISSUED FOR BID

ONE-LINE DIAGRAM-1

SYMBOL	DESCRIPTION
	DRAW OUT AIR CIRCUIT BREAKER, LOW VOLTAGE
400	CIRCUIT BREAKER, THERMAL MAGNETIC TRIP SHOWN, 3 POLE, UNO
AS AF or AT AF	CIRCUIT BREAKER, STATIC TRIP UNIT, SENSOR AMP TRIP AND FRAME RATINGS SHOWN, 3 POLE, UNO
100/M	CIRCUIT BREAKER, MAGNETIC TRIP ONLY, TRIP RATING SHOWN, 3 POLE, UNO
400 400	CIRCUIT BREAKER WITH CURRENT LIMITING FUSES, TRIP AND FUSE RATING INDICATED, 3 POLE, UNO
400 225	FUSED SWITCH, SWITCH AND FUSE CURRENT RATING INDICATED, 3 POLE, UNO
100	SWITCH, CURRENT RATING INDICATED, 3 POLE, UNO
60 (3)	FUSE, CURRENT RATING AND QUANTITY INDICATED
1	MAGNETIC STARTER WITH OVERLOAD, NEMA SIZE INDICATED, FVNR UNO
AFD	ELECTRONIC STARTER/SPEED CONTROL RVSS = REDUCED VOLTAGE SOFT STARTER AFD = AC ADJUSTABLE FREQUENCY DRIVE DC = DC ADJUSTABLE SPEED DRIVE RVAT = REDUCED VOLTAGE AUTO TRANSFORMER TYPE RVRT = REDUCED VOLTAGE REACTOR TYPE
	CABLE OR BUS CONNECTION POINT
K	KEY INTERLOCK
	SURGE ARRESTER (GAP TYPE)
10	CAPACITOR - KVAR INDICATED, 3 PHASE
3	AC MOTOR, SQUIRREL CAGE INDUCTION - HORSEPOWER INDICATED
G 500/625	GENERATOR, KW/KVA RATING SHOWN
VS V 0-600V	ANALOG METER WITH SWITCH - SCALE RANGE SHOWN V = VOLTAGE KW = KILOWATTS A = AMPERAGE KVAR = KILOVARS PF = POWER FACTOR
DPM	DIGITAL POWER METER (MULTIFUNCTION)
	GROUND
15 KVA 480-120/240V 1 PH	TRANSFORMER, SIZE, VOLTAGE RATINGS, AND PHASE INDICATED
480-120V (3)	POTENTIAL TRANSFORMER, VOLTAGE RATING AND QUANTITY INDICATED
100:5 (3)	CURRENT TRANSFORMER, RATIO(100:5) AND QUANTITY INDICATED (3)
SPD	SURGE PROTECTIVE DEVICE

ONE-LINE DIAGRAM-2

SYMBOL	DESCRIPTION
	DRAWOUT POWER CIRCUIT BREAKER, MEDIUM VOLTAGE
	NON DRAWOUT FUSED SWITCH, MEDIUM VOLTAGE
	DRAWOUT FUSED SWITCH AND CONTACTOR, MEDIUM VOLTAGE
	DRAWOUT FUSED SWITCH AND VACUUM CONTACTOR, MEDIUM VOLTAGE
	DRAWOUT VACUUM CONTACTOR, MEDIUM VOLTAGE
	MEDIUM VOLTAGE CABLE STRESS CONE TYPE TERMINATION, OPEN TERMINATOR OR ELBOW
	SWITCH - LOAD BREAK, GROUP OPERATED, MEDIUM VOLTAGE
	SWITCH W/ARCING HORNS, MEDIUM VOLTAGE
	DISCONNECTING FUSE - SOLID MATERIAL, MEDIUM VOLTAGE
	SWITCH - HOOK STICK OPERATED, SINGLE POLE, MEDIUM VOLTAGE
	FUSE - EXPULSION, HOOK STICK OPERATED, SINGLE POLE, MEDIUM VOLTAGE
	GROUND SWITCH, GANG OPERATED
	TERMINAL BLOCK LUG
	DELTA CONNECTION
	WYE GROUNDED CONNECTION, SOLID GROUND
50:5 (1)	CURRENT TRANSFORMER, ZERO SEQUENCE, RATIO AND QUANTITY INDICATED
MO	MOTOR OPERATOR, BREAKER OR SWITCH
MPR	MOTOR PROTECTION RELAY

NOTES:

1. THESE ARE STANDARD LEGEND SHEETS. SOME SYMBOLS AND ABBREVIATIONS MAY APPEAR ON THE LEGEND AND NOT ON THE DRAWINGS.
2. FOR ADDITIONAL ABBREVIATIONS OF OTHER DIVISIONS (HVAC, MECHANICAL, AND STRUCTURAL/ARCHITECTURAL) SEE OTHER LEGENDS.

CONTROL DIAGRAM-1

SYMBOL	DESCRIPTION
	PUSH-BUTTON SWITCH, MOMENTARY CONTACT, NORMALLY OPEN
	PUSH-BUTTON SWITCH, MOMENTARY CONTACT, NORMALLY CLOSED
	PUSH BUTTON SWITCH, MAINTAINED CONTACTS WITH MECHANICAL INTERLOCK
	3 POSITION SELECTOR SWITCH MAINTAINED CONTACT
HAND OFF REMOTE	SELECTOR SWITCH - MAINTAINED CONTACT - CHART IDENTIFIES OPERATION WHEN NEEDED FOR CLARITY:
	TOGGLE SWITCH, ON-OFF TYPE
ON OFF	SELECTOR SWITCH, ON-OFF TYPE
	MUSHROOM HEAD PUSHBUTTON SWITCH
A	INDICATING LIGHT, PUSH-TO-TEST, LETTER INDICATES COLOR
A	INDICATING LIGHT - LETTER INDICATES COLOR A - AMBER G - GREEN S - STROBE B - BLUE R - RED C - CLEAR W - WHITE
ETM	ELAPSED TIME METER
M	MOTOR STARTER CONTACTOR COIL
CRX	CONTROL RELAY, X INDICATES NUMERICAL ORDER IN CIRCUIT
TDR X	TIME DELAY RELAY, X INDICATES NUMERICAL ORDER IN CIRCUIT
	CONTACT - NORMALLY OPEN
	CONTACT - NORMALLY CLOSED
	REMOTE DEVICE
	TIME DELAY RELAY CONTACT, NORMALLY OPEN, CLOSES WHEN ENERGIZED AND TIMED OUT
	TIME DELAY RELAY CONTACT, NORMALLY CLOSED, OPENS WHEN ENERGIZED AND TIMED OUT
	TIME DELAY RELAY CONTACT, CLOSES WHEN ENERGIZED, OPENS WHEN DE-ENERGIZED AND TIMED OUT
	TIME DELAY RELAY CONTACT, OPENS WHEN ENERGIZED, CLOSES WHEN DE-ENERGIZED AND TIMED OUT
	MOTOR SPACE HEATER
	TERMINAL BLOCK, REMOTE
	TERMINAL BLOCK, INTERNAL
	FUSE, RATING INDICATED
CPT 120V	TRANSFORMER, CONTROL POWER

POSITION				
CKT	HAND	OFF	REMOTE	
1	X	O	O	X - CLOSED CONTACT
2	O	O	X	O - OPEN CONTACT

CONTROL DIAGRAM-2

SYMBOL	DESCRIPTION
	CAPACITOR
+ -	BATTERY
	LIMIT SWITCH, NORMALLY OPEN, CLOSES AT END OF TRAVEL
	LIMIT SWITCH, NORMALLY CLOSED, OPENS AT END OF TRAVEL
	TEMPERATURE SWITCH, OPENS ON TEMPERATURE RISE
	TEMPERATURE SWITCH, CLOSES ON TEMPERATURE RISE
	FLOAT SWITCH, NORMALLY OPEN, CLOSES ON DESCENDING LEVEL
	FLOAT SWITCH, NORMALLY OPEN, CLOSES ON RISING LEVEL
	PRESSURE SWITCH, NORMALLY CLOSED, OPENS ON RISING PRESSURE
	PRESSURE SWITCH, NORMALLY OPEN, CLOSES ON RISING PRESSURE
	FLOW SWITCH, CLOSES ON INCREASED FLOW
	FLOW SWITCH, OPENS ON INCREASED FLOW

LICENSED PROFESSIONAL ENGINEER
BLAIR I. BEADERSTADT
32520
OKLAHOMA
MAY 11, 2026

VERIFY SCALE
BAR IS ONE INCH ON ORIGINAL DRAWING.
0 1"

GENERAL ELECTRICAL LEGEND 1

PROJECT NO. TMUA-W 24-05

A.B. JEWELL WTP RESIDUALS IMPROVEMENTS PHASE 2

CITY OF TULSA, OKLAHOMA
WATER AND SEWER DEPARTMENT

PLANS AND ESTIMATES PREPARED BY: Jacobs

REVISION	BY	DATE

PLAN SCALE: AS NOTED	DRAWN	SM	05/2026	APPROVED:
	DESIGNED	BB	05/2026	
PROFILE SCALE:	SURVEY			
HORIZONTAL: N/A	PROJ. MGR.	KMM	6/26	
	LEAD ENGR.	CEM	6/26	
VERTICAL N/A	FIELD MGR.	PM	7/26	DESIGN MANAGER
FILE:	DRAWING: G-12			DATE: MAY 2026
ATLAS PAGE NO: 543				SHEET 12 OF 47 SHEETS

ISSUED FOR BID

PATHNAME: 001-G-0012_D3910200.dgn PLOT DATE: 6-MAY-2026 PLOT TIME: 13:59

POWER SYSTEM PLAN-1

SYMBOL	DESCRIPTION
▲	CONNECTION POINT TO EQUIPMENT SPECIFIED. RACEWAY, CONDUCTOR,TERMINATION AND CONNECTION IN THIS DIVISION.
M	MOTOR, SQUIRREL CAGE INDUCTION
LPXXA	HOME RUN - DESTINATION SHOWN

NOTE:
ALL UNMARKED CONDUIT RUNS CONSIST OF TWO NO. 12, ONE NO. 12 GROUND CONDUCTORS IN 3/4" CONDUIT.

	LIQUID TIGHT FLEXIBLE METALLIC CONDUIT
[A1]	CONDUIT AND CONDUCTOR CALLOUT, SEE CIRCUIT SCHEDULE
	CONDUIT DOWN
	CONDUIT UP
	CONDUIT, STUBBED AND CAPPED
	CONDUIT, ROUTED EXPOSED
	U/G CONCRETE ENCASED DUCTBANK, OR CONDUITS EMBEDDED IN CONCRETE
DB	DIRECT BURIED CONDUIT
FO	FIBER OPTIC CONDUIT
	CONDUIT SEAL-OFF FITTING (FOR CLASS I DIV 2 LOCATION)
T	TRANSFORMER
HH	UNDERGROUND HANDHOLE
J	PULLBOX, OR JUNCTION BOX WITH TERMINAL BLOCKS
CS	CONTROL STATION, SEE CONTROL DIAGRAMS FOR CONTROL DEVICE(S) REQUIRED.
30	NONFUSED DISCONNECT SWITCH, CURRENT RATING INDICATED, 3 POLE
G	UNDERGROUND BARE COPPER CONDUCTOR
	THERMO-WELD (TAP TO GROUND GRID)
	GROUND ROD
	GROUND TEST WELL
	GROUND PIGTAIL, COIL UP MINIMUM 12'-0"
PB	PULL BOX, SIZE AS REQUIRED
TB	TERMINAL BOX, WITH WIRE TERMINALS
XX	CONVENIENCE RECEPTACLE - DUPLEX UNLESS NOTED OTHERWISE XP - EXPLOSION PROOF WP - WEATHERPROOF GFCI - GROUND FAULT CIRCUIT INTERRUPTER SUBSCRIPT NUMBER AT RECEPTACLE INDICATES CIRCUIT
	FADED LINES REPRESENT EXISTING WORK
	DARK LINES REPRESENT NEW WORK

NOTE: CONDUIT SIZES SHOWN ARE FOR EXPOSED CONDUITS.
MINIMUM SIZE OF UNDERGROUND CONDUIT SHALL BE 2 INCHES.

CIRCUIT SCHEDULE
POWER: 1 PHASE, 2 WIRE

CKT ID	CKT AMPS	CONDUIT AND CONDUCTOR SIZE
PA1	15	3/4"C, 2#14, 1#14G
PA2	20	3/4"C, 2#12, 1#12G
PA3	30	3/4"C, 2#10, 1#10G
PA4	40	3/4"C, 2#8, 1#10G
PA5	50	1"C, 2#6, 1#10G
PA6	60	1"C, 2#4, 1#10G
PA7	70	1"C, 2#4, 1#8G
PA8	80	1"C, 2#3, 1#8G
PA9	90	1"C, 2#2, 1#8G
PA10	100	1"C, 2#2, 1#8G
PA12	125	1 1/2"C, 2#1, 1#6G
PA15	150	1 1/2"C, 2#1/0, 1#6G
PA20	200	1 1/2"C, 2#3/0, 1#6G
PA22	225	2"C, 2#4/0, 1#4G

CIRCUIT SCHEDULE
POWER: 1 PHASE, 3 WIRE OR 3 PHASE, 3 WIRE

CKT ID	CKT AMPS	CONDUIT AND CONDUCTOR SIZE
PB1	15	3/4"C, 3#14, 1#14G
PB2	20	3/4"C, 3#12, 1#12G
PB3	30	3/4"C, 3#10, 1#10G
PB4	40	3/4"C, 3#8, 1#10G
PB5	50	3/4"C, 3#6, 1#10G
PB6	60	1"C, 3#4, 1#10G
PB7	70	1"C, 3#4, 1#8G
PB8	80	1 1/2"C, 3#3, 1#8G
PB9	90	1 1/2"C, 3#2, 1#8G
PB10	100	1 1/2"C, 3#2, 1#8G
PB12	125	1 1/2"C, 3#1, 1#6G
PB15	150	1 1/2"C, 3#1/0, 1#6G
PB17	175	2"C, 3#2/0, 1#6G
PB20	200	2"C, 3#3/0, 1#6G
PB22	225	2"C, 3#4/0, 1#4G
PB25	250	2 1/2"C, 3#250KCM, 1#4G
PB30	300	3"C, 3#350KCM, 1#4G
PB35	350	4"C, 3#500KCM, 1#3G
PB40	400	2 SETS: 2"C, 3#3/0, 1#3G
PB45	450	2 SETS: 2"C, 3#4/0, 1#2G
PB50	500	2 SETS: 2 1/2"C, 3#250KCM, 1#2G
PB60	600	2 SETS: 3"C, 3#350KCM, 1#1G
PB80	800	2 SETS: 4"C, 3#500KCM, 1#1/0G
PB100	1000	3 SETS: 3"C, 3#500KCM, 1#2/0G

CIRCUIT SCHEDULE
POWER: 3 PHASE, 4 WIRE

CKT ID	CKT AMPS	CONDUIT AND CONDUCTOR SIZE
PC1	15	3/4"C, 4#14, 1#14G
PC2	20	3/4"C, 4#12, 1#12G
PC3	30	3/4"C, 4#10, 1#10G
PC4	40	3/4"C, 4#8, 1#10G
PC5	50	1"C, 4#6, 1#10G
PC6	60	1 1/4"C, 4#4, 1#10G
PC7	70	1 1/4"C, 4#4, 1#8G
PC8	80	1 1/4"C, 4#3, 1#8G
PC9	90	1 1/2"C, 4#2, 1#8G
PC10	100	1 1/2"C, 4#2, 1#8G
PC12	125	1 1/2"C, 4#1, 1#6G
PC15	150	2"C, 4#1/0, 1#6G
PC20	200	2"C, 4#3/0, 1#6G
PC22	225	2 1/2"C, 4#4/0, 1#4G
PC25	250	2 1/2"C, 4#250KCM, 1#4G
PC30	300	3"C, 4#350KCM, 1#4G
PC35	350	3 1/2"C, 4#500KCM, 1#3G
PC40	400	4"C, 4#500KCM, 1#2G
PC50	500	2 SETS: 2 1/2"C, 4#250KCM, 1#2G
PC60	600	2 SETS: 3"C, 4#350KCM, 1#1G
PC80	800	2 SETS: 4"C, 4#500KCM, 1#1/0G
PC100	1000	3 SETS: 4"C, 4#500KCM, 1#2/0G
PC120	1200	4 SETS: 4"C, 4#500KCM, 1#3/0G
PC160	1600	5 SETS: 4"C, 4#500KCM, 1#4/0G
PC200	2000	6 SETS: 4"C, 4#500KCM, 1#250KCM G
PC250	2500	6 SETS: 4"C, 4#750KCM, 1#350KCM G
PC300	3000	8 SETS: 4"C, 4#500KCM, 1#400KCM G

CONTROL: DISCRETE (TYPE 1 CABLE)

CKT ID	CONDUIT AND CONDUCTOR SIZE (SINGLE OR MULTIPLE CONDUCTOR)
C1	1"C (MIN), WITH MSC (SEE NOTE 1)
C2	3/4"C, 2#14, 1#14G
C3	3/4"C, 3#14, 1#14G
C4	3/4"C, 4#14, 1#14G
C5	3/4"C, 5#14, 1#14G
C6	3/4"C, 6#14, 1#14G
C7	1"C, 7#14, 1#14G
C8	1"C, 8#14, 1#14G
C10	1"C, 10#14, 1#14G
C12	1"C, 12#14, 1#14G
C14	1"C, 14#14, 1#14G
C16	1 1/2"C, 16#14, 1#14G
C18	1 1/2"C, 18#14, 1#14G
C20	1 1/2"C, 20#14, 1#14G
C24	1 1/2"C, 24#14, 1#14G
C28	1 1/2"C, 28#14, 1#14G
C32	1 1/2"C, 32#14, 1#14G
C34	2"C, 34#14, 1#14G
C36	2"C, 36#14, 1#14G
C38	2"C, 38#14, 1#14G
C40	2"C, 40#14, 1#14G
C42	3"C, 42#14, 1#14G
C48	3"C, 48#14, 1#14G

CIRCUIT SCHEDULE
CONTROL: ANALOG

CKT ID	CONDUIT AND CONDUCTOR SIZE
A1	3/4"C, 1 TYPE 3
A2	3/4"C, 2 TYPE 3
A3	1"C, 3 TYPE 3
A4	1"C, 4 TYPE 3
A5	1"C, 5 TYPE 3
A6	1 1/4"C, 6 TYPE 3
A7	1 1/4"C, 7 TYPE 3
A8	1 1/2"C, 8 TYPE 3
A9	1 1/2"C, 9 TYPE 3
A10	1 1/2"C, 10 TYPE 3
A11	1 1/2"C, 11 TYPE 3
A12	2"C 12 TYPE 3
A15	2"C 15 TYPE 3
A16	2"C 16 TYPE 3
A17	2"C 17 TYPE 3
A20	2"C, 20 TYPE 3
A21	2 1/2"C, 21 TYPE 3
A22	2 1/2"C, 22 TYPE 3
A24	3"C, 24 TYPE 3

CIRCUIT SCHEDULE
POWER: ADJUSTABLE FREQUENCY DRIVES (TYPE 8 CABLE)

CKT ID	HORSE POWER	CONDUIT AND CONDUCTOR SIZE
AFD1	30	3/C #12 W/G-SHD
AFD2	60	2"C, 3/C #1 W/G-SHD
AFD3	75	3"C, 3/C #2/0 W/G-SHD
AFD4	100	3"C, 3/C #3/0 W/G-SHD
AFD5	125	4"C, 3/C #250kCMIL W/G-SHD

GENERAL NOTES:

1. MSC = MANUFACTURER SUPPLIED CABLE. CONTRACTOR SHALL ENSURE SUFFICIENT LENGTH OF CABLE IS FURNISHED PRIOR TO CABLE INSTALLATION. SUFFICIENT LENGTH SHALL BE DEFINED AS WHAT IS REQUIRED TO INSTALL THE CABLE BETWEEN THE DEVICES PLUS 50 FEET OF EXTRA CABLE. CONTRACTOR SHALL COIL UP AND LOCATE THE EXTRA LENGTH OF CABLE IN HANDHOLE OR NEMA 4X STAINLESS STEEL PULLBOX, AS APPLICABLE. SPLICING OF CABLE IS STRICTLY PROHIBITED. MINIMUM SIZE OF CONDUIT AS INDICATED ON DRAWINGS. CONTRACTOR SHALL BE REQUIRED TO FURNISH LARGER SIZE CONDUIT IN ORDER TO INSTALL THE MSC.
2. ALL CONDUITS SHOWN ARE SIZED BASED ON CIRCUIT CONDUCTORS BEING IN A SINGLE EXPOSED CONDUIT. IF SUCH CIRCUIT CONDUCTORS ARE ROUTED IN UNDERGROUND CONDUIT DUCTBANK, SEE THE ASSOCIATED CONDUIT DUCTBANK DETAILS FOR SIZE OF CONDUIT WITH SAID CIRCUIT CONDUCTORS.

CIRCUIT SCHEDULE
CONTROL: CAT-6+ (TYPE 30 CABLE)

CKT ID	CONDUIT AND CONDUCTOR SIZE
CAT1	3/4"C, 1 TYPE 30
CAT2	3/4"C, 2 TYPE 30
CAT3	1"C, 3 TYPE 30
CAT4	1"C, 4 TYPE 30
CAT5	1"C, 5 TYPE 30

CIRCUIT SCHEDULE
FIBER OPTIC CABLE (SEE SPEC)

CKT ID	CONDUIT AND CONDUCTOR SIZE
F0	2"C, 12-PAIR FIBER OPTIC CABLE, 0.49" OD
F1	2"C, 6-PAIR FIBER OPTIC CABLE, 0.49" OD
F2	2"C, 2[6-PAIR FIBER OPTIC CABLE, 0.49" OD]
F3	2"C, 3[6-PAIR FIBER OPTIC CABLE, 0.49" OD]

VERIFY SCALE
BAR IS ONE INCH ON ORIGINAL DRAWING.
0 1"

REVISION	BY	DATE

LICENSED PROFESSIONAL ENGINEER
BLAIR I. BEADERSTADT
32520
OKLAHOMA
MAY 11, 2026

GENERAL
ELECTRICAL LEGEND 2

PROJECT NO. TMUA-W 24-05

A.B. JEWELL WTP RESIDUALS IMPROVEMENTS PHASE 2

CITY OF TULSA, OKLAHOMA
WATER AND SEWER DEPARTMENT

PLANS AND ESTIMATES PREPARED BY:
Jacobs

PLAN SCALE: AS NOTED	DRAWN	SM	05/2026	APPROVED:
	DESIGNED	BB	05/2026	
PROFILE SCALE:	SURVEY			
HORIZONTAL: N/A	PROJ. MGR.	BBM	5/26	
	LEAD ENGR.	CW	5/26	
VERTICAL N/A	FIELD MGR.		5/26	DESIGN MANAGER
FILE:	DRAWING: G-13			DATE: MAY 2026
ATLAS PAGE NO: 543				SHEET 13 OF 47 SHEETS

ISSUED FOR BID

PATHNAME: 001-G-0013_D3910200.dgn PLOT DATE: 6-MAY-2026 PLOT TIME: 13:59

INSTRUMENT IDENTIFICATION

DIGITAL SYSTEM INTERFACES

- ▲ ANALOG INPUT
- ▼ ANALOG OUTPUT
- $\triangle_X$ DISCRETE INPUT
- ∇_X DISCRETE OUTPUT

GENERAL INSTRUMENT OR FUNCTIONAL SYMBOLS



- FIELD MOUNTED
- REAR-OF-PANEL MOUNTED (OPERATOR INACCESSIBLE)
- PANEL MOUNTED (OPERATOR ACCESSIBLE)
- MCC MOUNTED
- COMPUTER FUNCTION
- PLC FUNCTION
- SHARED DISPLAY, SHARED CONTROL

TRANSDUCERS

A	ANALOG	I	CURRENT
D	DIGITAL	P	PNEUMATIC
E	VOLTAGE	PF	PULSE FREQUENCY
F	FREQUENCY	PD	PULSE DURATION
H	HYDRAULIC	R	RESISTANCE

EXAMPLE



CURRENT TO PNEUMATIC TRANSDUCER (BACK OF PANEL, IN A FLOW LOOP)

INSTRUMENT IDENTIFICATION LETTERS TABLE

LETTER	FIRST-LETTER: PROCESS OR INITIATING VARIABLE	FIRST-LETTER: MODIFIER	SUCCEEDING-LETTERS: READOUT OR PASSIVE FUNCTION	SUCCEEDING-LETTERS: READOUT OR PASSIVE FUNCTION	SUCCEEDING-LETTERS: READOUT OR PASSIVE FUNCTION
A	ANALYSIS (+)		ALARM		
B	BURNER, COMBUSTION		USER'S CHOICE (*)	USER'S CHOICE (*)	USER'S CHOICE (*)
C	USER'S CHOICE (*)			CONTROL	CLOSE
D	USER'S CHOICE (*)	DIFFERENCE, DIFFERENTIAL			DEVIATION
E	VOLTAGE		SENSOR, PRIMARY ELEMENT		
F	FLOW, FLOW RATE	RATIO (FRACTION)			
G	USER'S CHOICE (*)		GLASS, GAUGE, VIEWING DEVICE	GATE	
H	HAND (MANUAL)				HIGH
I	CURRENT (ELECTRICAL)		INDICATE		
J	POWER		SCAN		
K	TIME, SCHEDULE	TIME RATE OF CHANGE		CONTROL STATION	
L	LEVEL		LIGHT (PILOT)		LOW
M	USER'S CHOICE (*)	MOMENTARY			MIDDLE, INTERMEDIATE
N	USER'S CHOICE (*)		USER'S CHOICE (*)	USER'S CHOICE (*)	USER'S CHOICE (*)
O	USER'S CHOICE (*)		ORIFICE, RESTRICTION		OPEN
P	PRESSURE, VACUUM		POINT (TEST CONNECTION)		
Q	QUANTITY	INTEGRATE, TOTALIZE	INTEGRATE, TOTALIZE		
R	RADIATION		RECORD OR PRINT		RUN
S	SPEED, FREQUENCY	SAFETY		SWITCH	STOP
T	TEMPERATURE			TRANSMIT	
U	MULTI VARIABLE		MULTI FUNCTION	MULTI FUNCTION	
V	VIBRATION, MECHANICAL ANALYSIS			VALVE, DAMPER, LOUVER	
W	WEIGHT, FORCE		WELL, PROBE		
X	UNCLASSIFIED (*)	X AXIS	ACCESSORY DEVICES, UNCLASSIFIED (*)	UNCLASSIFIED (*)	UNCLASSIFIED (*)
Y	EVENT, STATE OR PRESENCE	Y AXIS		AUXILLARY DEVICES	
Z	POSITION, DIMENSION	Z AXIS, SAFETY INSTRUMENTED SYSTEM		DRIVE, ACTUATOR, UNCLASSIFIED FINAL CONTROL ELEMENT	

TABLE BASED ON THE INTERNATIONAL SOCIETY OF AUTOMATION (ISA) STANDARD.
(+) WHEN USED, EXPLANATION IS SHOWN ADJACENT TO INSTRUMENT SYMBOL. SEE ABBREVIATIONS AND LETTER SYMBOLS.
(*) WHEN USED, DEFINE THE MEANING HERE FOR THE PROJECT.

ACCESSORY DEVICES

A	ALARM
C	CONTROLLER
I	INDICATOR
R	RECORDER
S	SWITCH
T	TRANSMITTER
X	UNCLASSIFIED

EXAMPLE



TRANSMITTER AS AN ACCESSORY TO A FLOW ELEMENT

SPECIAL CASES

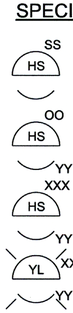

STOP-START HAND SWITCH MOMENTARY CONTACT SWITCHES (CONTROLLED DEVICE WILL NOT RESTART ON RETURN OF POWER AFTER POWER FAILURE).

ON-OFF HAND SWITCH, MAINTAINED CONTACT SWITCH (CONTROLLED DEVICE WILL RESTART ON RETURN OF POWER AFTER POWER FAILURE).

(SEE BELOW)

EVENT LIGHTS (SEE BELOW)

YY:
WP - WEATHERPROOF
XP - EXPLOSION-PROOF

XXX:

CLOSE	- VALVE COMMANDED TO "CLOSE"
CONTROL POWER	- INDICATES CONTROL POWER TO THE CONTROL PANEL
ED	- 'E-STOP' DEPRESSED
E-STOP	- EMERGENCY STOP; MAINTAINED-CONTACT, TWIST-TO-RELEASE MUSHROOM HEAD PUSH BUTTON
FAULT	- INDICATES AN EQUIPMENT FAULT
FOR	- FORWARD-OFF-REVERSE, MAINTAINED-CONTACT IN "FORWARD" AND "OFF" POSITION; SPRING-RETURN TO CENTER IN "REVERSE" POSITION, THREE-POSITION SELECTOR SWITCH
HI TEMP	- HIGH TEMPERATURE
HT	- HIGH TORQUE
IA	- IN AUTO STATUS
LEAK	- "LEAK" DETECTION
LHH	- "HIGH HIGH LEVEL"
LLL	- "LOW LOW LEVEL"
LOR	- LOCAL-OFF-REMOTE, MAINTAINED-CONTACT, THREE-POSITION SELECTOR SWITCH
MA	- MANUAL/AUTO
MOA	- "MANUALLY INITIATE-OFF-AUTO", MAINTAINED CONTACT, THREE POSITION SELECTOR SWITCH
OCA	- OPEN-CLOSE-AUTO, MAINTAINED-CONTACT, THREE-POSITION SELECTOR SWITCH
OIU	- OPERATOR INTERFACE UNIT
OL	- OVERLOAD TRIPPED
OPEN	- VALVE COMMANDED TO "OPEN"
OR	- OFF-RUN, MAINTAINED-CONTACT, TWO-POSITION SELECTOR SWITCH RUNNING
OSH	- SEAL LEAK
PH	- "HIGH PRESSURE"
PL	- "LOW PRESSURE"
POT	- POTENTIOMETER
PWR	- "UTILITY POWER OK"
SEAL FAIL	- SEAL FAILURE
SILENCE	- ALARM SILENCE
STOPPED	- STOPPED
RD	- RECYCLE DISCHARGE
RESET	- ALARM / EQUIPMENT RESET
ROA	- RUN-OFF-AUTO, MAINTAINED-CONTACT, THREE-POSITION SELECTOR SWITCH
ROR	- RUN-OFF-REMOTE, MAINTAINED-CONTACT, THREE-POSITION SELECTOR SWITCH
RUN	- "RUNNING"

LINE LEGEND

- PRIMARY PROCESS (CLOSED CONDUIT, DASHED LINE INDICATES ALTERNATE FLOW STREAM)
- SECONDARY PROCESS
- BYPASS PROCESS
- PROCESS (OPEN CHANNEL)
- ANALOG SIGNAL (4 TO 20 mAdc, ETC.)
- DISCRETE (ON/OFF, ETC.)
- PNEUMATIC SIGNAL
- FILLED SYSTEM SIGNAL
- HYDRAULIC SYSTEM SIGNAL
- DATA LINK
- BUILDING OR FACILITY BOUNDARY
- PACKAGE SYSTEM EQUIPMENT
- TYPICAL BREAK
- POWER FEED
- MANUFACTURER SUPPLIED CABLE

PARALLELING LINES

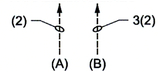

(A) TOTAL OF 2 SIGNALS

(B) 3 TYPICAL SETS OF 2 SIGNALS EACH. TOTAL OF 6 SIGNALS.

CONNECTING LINES

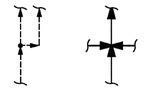

NON-CONNECTING LINES



CONTINUATION MATCHPOINT EXAMPLES (ON SAME DWG):

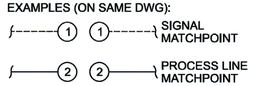

INTERFACE SYMBOLS

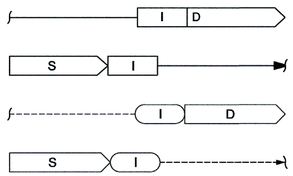

I INTERFACE IDENTIFIER

D DESTINATION DRAWING NO.

S SOURCE DRAWING NO.

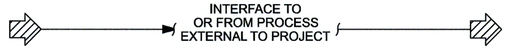

EQUIPMENT TAG NUMBERS

SEE SPECIFICATION SECTION 40 90 01 INSTRUMENTATION AND CONTROL FOR PROCESS SYSTEMS FOR TAG NUMBER REQUIREMENTS.

SURGE SUPPRESSOR SYMBOLS

SEE SPECIFICATION SECTION 40 90 01 INSTRUMENTATION AND CONTROL FOR PROCESS SYSTEMS FOR TAG NUMBER REQUIREMENTS.

- SS-1 SURGE SUPPRESSOR: PROTECTS 120VAC, SINGLE PHASE POWER IN CONTROL PANELS
- SS-2 SURGE SUPPRESSOR: PROTECTS ANALOG SIGNALS WITHIN CONTROL PANELS
- SS-3 SURGE SUPPRESSOR: PROTECTS ANALOG SIGNAL OF 2-WIRE TRANSMITTERS
- SS-4 SURGE SUPPRESSOR: PROTECTS BOTH ANALOG SIGNAL AND 120VAC POWER OF SINGLE AND DUAL CHANNEL 4-WIRE TRANSMITTER
- SS-5 SURGE SUPPRESSOR: PROTECTS CATEGORY 5/5e/6 ETHERNET SIGNALS WITHIN CONTROL PANELS
- SS-6 SURGE SUPPRESSOR: PROTECTS MODBUS DATA NETWORK SIGNALS IN CONTROL PANELS
- SS-7 SURGE SUPPRESSOR: PROTECTS HART DATA NETWORK SIGNALS IN CONTROL PANELS

ABBREVIATIONS & LETTER SYMBOLS

AC	ALTERNATING CURRENT
AM	AUTO-MANUAL
CAM	COMPUTER-AUTO-MANUAL
CCS	CENTRAL CONTROL SYSTEM
CL_2 etc.	CHLORINE (TYPICAL: USE STANDARD CHEMICAL ELEMENT ABBREVIATIONS)
CM	COMPUTER-MANUAL
COD	CHEMICAL OXYGEN DEMAND
CP-X	CONTROL PANEL NO. X
DAF	DISSOLVED AIR FLOTATION
DC	DIRECT CURRENT
DCS	DISTRIBUTED CONTROL SYSTEM
DCU	DISTRIBUTED CONTROL UNIT
DO	DISSOLVED OXYGEN
FCL_2	FREE CHLORINE RESIDUAL
F	FAULT
FC	FULLY CLOSED
FLP	FAIL LAST POSITION
FO	FULLY OPENED
FOS	FAST-OFF-SLOW
FOSA	FAST-OFF-SLOW-AUTO
FOSR	FAST-OFF-SLOW-REMOTE
FP-W-X	FIELD PANEL NO. WX \ (W=UNIT PROCESS NUMBER, X=PANEL NUMBER)
FR	FORWARD-REVERSE
HOA	HAND-OFF-AUTO
HOR	HAND-OFF-REMOTE
ISR	INTRINSICALLY SAFE RELAY
LEL	LOWER EXPLOSIVE LIMIT
LOR	LOCAL-OFF-REMOTE
LOS	LOCKOUT STOP
LR	LOCAL-REMOTE
MA	MANUAL-AUTO
MC	MODULATE-CLOSE
MCC-X	MOTOR CONTROL CENTER NO. X
MS	MOTOR STARTER
MSC	MANUFACTURER SUPPLIED CABLE
NC	NORMALLY CLOSED
NO	NORMALLY OPEN
OC	OPEN-CLOSE (SPRING-RETURN TO CENTER)
OCA	OPEN-CLOSE-AUTO
OCR	OPEN-CLOSE-REMOTE
OO	ON-OFF
OOA	ON-OFF-AUTO
OOR	ON-OFF-REMOTE
ORP	OXIDATION REDUCTION POTENTIAL
OSC	OPEN-STOP-CLOSE
PDN	PULSATION DAMPENER
PE	PUMP ENABLE
PFU	POLYMER FEED UNIT
pH	HYDROGEN ION CONCENTRATION
PLC	PROGRAMMABLE LOGIC CONTROLLER
PMA	PUMP MONITORING ASSEMBLY
PMP	PUMP
PSPS	PRIMARY SLUDGE PUMP STATION
PTZ	PAN, TILT, ZOOM
PROC	PROCESS MECHANICAL
PWR	POWER
R	RUNNING
RD	RECYCLE/DISCHARGE
RIO	REMOTE I/O UNIT
RM-X	REMOTE MULTIPLEXING MODULE NO. X
RTU-X	REMOTE TELEMETRY UNIT NO. X
S	STOPPED
SA	SCADA AUTO MODE
SF	SLOWER-FASTER
SM	SCUM PUMP
SP	STOP
SS	START-STOP
SSPS	SECONDARY SLUDGE PUMP STATION
ST	START
SSC	SUPERVISORY SET POINT CONTROL
TCL_2	TOTAL CHLORINE RESIDUAL
TOC	TOTAL ORGANIC CARBON
TOD	TOTAL OXYGEN DEMAND
TSP	TWISTED, SHIELDED PAIR
TURB	TURBIDITY
UP	UNIT PROCESS
UVI	ULTRAVIOLET INTENSITY
UVT	ULTRAVIOLET TRANS
VHC	VOLATILE HYDROCARBONS
VIB	VIBRATION
VLV	VALVE
WIP	WIPER
WP	WEATHER PROOF
XP	EXPLOSION PROOF
Δ	DIFFERENCE
Σ	SUM
×	MULTIPLY
÷	DIVIDE
F(X)	CHARACTERIZED
X^n	RAISED TO THE Nth POWER
$\sqrt{\ }$	SQUARE ROOT
AVG	AVERAGE
1:1	REPEAT OR BOOST
>	SELECT HIGHEST SIGNAL
<	SELECT LOWEST SIGNAL

GENERAL NOTES

1. COMPONENTS AND PANELS SHOWN WITH A SINGLE ASTERISK (*) ARE TO BE PROVIDED AS PART OF A PACKAGE SYSTEM.
2. COMPONENTS AND PANELS SHOWN WITH A DIAMOND (◆) ARE TO BE PROVIDED UNDER DIVISION 26, ELECTRICAL.
3. THIS IS A STANDARD LEGEND. THEREFORE, NOT ALL OF THIS INFORMATION MAY BE USED ON THE PROJECT.
4. RETAG ANY EXISTING MODIFIED EQUIPMENT WITH THE NEW TAG NUMBERS AS INDICATED WITHIN THESE CONTRACT DOCUMENTS.

VERIFY SCALE

BAR IS ONE INCH ON ORIGINAL DRAWING.
0 1"

LICENSED PROFESSIONAL ENGINEER
ORVIL LUGO
35653
OKLAHOMA

May 11, 2026

REVISION	BY	DATE

GENERAL
INSTRUMENTATION AND CONTROL LEGEND 1

PROJECT NO. TMUA-W 24-05

A.B. JEWELL WTP RESIDUALS IMPROVEMENTS PHASE 2

CITY OF TULSA, OKLAHOMA
WATER AND SEWER DEPARTMENT

PLANS AND ESTIMATES PREPARED BY:
Jacobs

PLAN SCALE: AS NOTED	DRAWN	SM	05/2026	APPROVED:
	DESIGNED	MM	05/2026	
PROFILE SCALE:	SURVEY			
HORIZONTAL: N/A	PROJ. MGR.	KMH	6/26	
	LEAD ENGR.	OLW	6/26	
VERTICAL N/A	FIELD MGR.		7/26	DESIGN MANAGER
FILE:	DRAWING: G-14			DATE: MAY 2026
ATLAS PAGE NO: 543				SHEET 14 OF 47 SHEETS

ISSUED FOR BID

PATHNAME: 001-G-0014_D3910200.dgn PLOT DATE: 6-MAY-2026 PLOT TIME: 14:00

VALVE SYMBOLS

GATE
KNIFE GATE
BUTTERFLY
GLOBE
BALL
V
VEE-BALL
PLUG
SEAT PORT ECCENTRIC PLUG
DIAPHRAGM
KNIFE

PINCH
NEEDLE
SWING CHECK
BALL CHECK
BACKFLOW PREVENTER
ROTARY
TELESCOPE
S
SAMPLE
MUD

PRESSURE RELIEF
AIR AND/OR VACUUM RELEASE
REGULATED SIDE
PRESSURE CONTROL
PRESSURE REGULATION (CLAY-TYPE)
MULTI-PORT VALVE (GATE VALVE SHOWN. FOR OTHER VALVE TYPES, APPROPRIATE VALVE SYMBOL SHOWN.) SEAT PORTS ARE IMPLIED BY INDICATED FLOW PATTERN.
ANGLE GATE

GATE SYMBOLS

FULL APERTURE SEALING SLIDE GATE
FABRICATED SLIDE GATE
STOP LOG
WEIR GATE
BUTTERFLY
FLAP
SHEAR

ACTUATOR SYMBOLS

PNEUMATIC DIAPHRAGM SPRING-OPPOSED, SINGLE OR DOUBLE ACTING
VALVE POSITIONER
MANUAL
PNEUMATIC CYLINDER SINGLE OR DOUBLE ACTING ACTUATED BY ONE INPUT
H
HYDRAULIC
M
ELECTRIC MOTOR
DIAPHRAGM, DIFFERENTIAL PRESSURE
S
SOLENOID
E/H
ELECTROHYDRAULIC

NOTE:
ON LOSS OF PRIMARY POWER (PNEUMATIC, ELECTRICAL, OR HYDRAULIC)

XX: FO FAIL OPEN
FC FAIL CLOSED
FLP FAIL TO LAST POSITION

PRIMARY ELEMENT SYMBOLS

PARSHALL FLUME
WEIR
ORIFICE PLATE
FLOW TUBE
PITOT-STATIC
VORTEX METER
ULTRASONIC FLOWMETER
M
ELECTROMAGNETIC FLOWMETER

PROPELLER OR TURBINE METER
THERMAL FLOWMETER
LEVEL (BUBBLER TUBE)
LE
RADAR LEVEL

LS
LEVEL (FLOAT)
FI
ROTAMETER
DE
DENSITY METER
XX
GENERIC
LE
ULTRASONIC LEVEL
LE/LIT
2-WIRE, 78 GHz RADAR LEVEL
LE
ULTRASONIC FLOW, BASED ON LEVEL MEASDUREMENT

MISCELLANEOUS SYMBOLS

V
VENT TO ATMOSPHERE
AIR GAP
T
DRIP TRAP
PIG INSERT POINT
PIG CATCH POINT
A
SELF CONTAINED AIR SUPPLY
AP
AIR PURGE SET
F
FLUSHING CONNECTION
S
SEAL WATER SET
WP
WATER PURGE SET
FLEXIBLE CONNECTION
AERATOR
DIAPHRAGM SEAL
ANNULAR DIAPHRAGM SEAL
SS
COMPOSITE SAMPLER
FLAME TRAP
CALIBRATION COLUMN
S
INLINE SILENCER
BLIND FLANGE
PIPE CAP
STRAINER
BASKET STRAINER
FILTER
PULSATION DAMPENER
EXPANSION CHAMBER
INLINE PUMP RUN DRY DETECTOR
SEAL-OFF FITTING

FFLCPLLLX
PANEL CONTINUED ON SAME OR OTHER DRAWING
PANEL OUTLINE
PANEL NAME
120V
120 VOLT, 60 HZ POWER
480V
480 VOLT, 60 HZ POWER
XX
AIR SET
XX = SUPPLY PRESSURE IN PSIG.
PLUG
RECEPTACLE
RUPTURE DISK (VACUUM)
RUPTURE DISK (PRESSURE)
TV
TV MONITOR
TV
TV CAMERA
A
B
AND
C
LOGIC ELEMENT:
IF A AND NOT B THEN C
A
B
OR
C
LOGIC ELEMENT:
IF A OR B THEN C
RADIO ANTENNA
XX
I
OR
I
INTERLOCK, SEE CONTROL DIAGRAMS

XX: IR INTERPOSING RELAY
ISB INTRINSIC SAFETY BARRIER
ISR INTRINSICALLY SAFE RELAY
DLRI DUAL-LOOP REPEATER ISOLATOR
MS MOTOR STARTER
TLRI TRI-LOOP REPEATER ISOLATOR

VOICE COMMUNICATION POINT
SKIMMING MECHANISM
SCREW CONVEYOR
MIXER
ELECTRIC MOTOR
OA
ODOR CONTROL NOZZLE
GOODSENECK VENT (ALSO AIR INLET)

PUMP AND COMPRESSOR SYMBOLS

CENTRIFUGAL PUMP (DRY PIT)
XX
CENTRIFUGAL WET PIT PUMP OR TURBINE PUMP
XX
RECIPROCATING OR METERING PUMP (POSITIVE DISPLACEMENT)
XX
DIAPHRAGM PUMP
XX
GEAR PUMP OR BLOWER (POSITIVE DISPLACEMENT)
XX

PROGESSING CAVITY PUMP
XX
COMPRESSOR (CENTRIFUGAL)
XX
COMPRESSOR (PISTON)
XX
BLOWER OR FAN (CENTRIFUGAL)
XX
EJECTOR

PISTON PUMP
XX
SUBMERSIBLE SUMP PUMP
XX
ROTARY PUMP
VACUUM PUMP
SCREW PUMP

XX: AS - ADJUSTABLE SPEED
CS-1 - CONSTANT SPEED (SINGLE SPEED)
CS-2 - CONSTANT SPEED (TWO SPEED)
CS-FR - CONSTANT SPEED (SINGLE SPEED) REVERSING MOTOR

LINE SIZE AND FLOW STREAM IDENTIFICATION

18" NPW
PIPE DIAMETER IN INCHES
FLOW STREAM IDENTIFICATION

FLOW STREAM IDENTIFICATION

CA	COMPRESSED AIR
CAP	CATIONIC POLYMER
DEW	DEWATERING
D	DRAIN
DS	DEWATERING SOLIDS
FW	FINISHED WATER
POA	ANIONIC POLYMER
RC	RECOVERED WATER
RW	RAW WATER
SA	SAMPLE
SL	SLUDGE
SPD	SUMP PUMP DISCHARGE
SUP	SUPERNATANT
RES	RESIDUALS
TS	THICKENED SLUDGE
W1	POTABLE WATER
W2	NON-POTABLE WATER

PATHNAME: 001-G-0015_D3910200.dgn PLOT DATE: 6-MAY-2026 PLOT TIME: 14:00

LICENSED PROFESSIONAL ENGINEER
ORVIL LUGO
35693
OKLAHOMA
May 11, 2026

VERIFY SCALE
BAR IS ONE INCH ON ORIGINAL DRAWING.
0 1"

REVISION	BY	DATE

GENERAL
INSTRUMENTATION AND CONTROL LEGEND 2

PROJECT NO. TMUA-W 24-05

A.B. JEWELL WTP RESIDUALS IMPROVEMENTS PHASE 2

CITY OF TULSA, OKLAHOMA
WATER AND SEWER DEPARTMENT

PLANS AND ESTIMATES PREPARED BY:
Jacobs

PLAN SCALE: AS NOTED	DRAWN	SM	05/2026	APPROVED:
	DESIGNED	MM	05/2026	
PROFILE SCALE:	SURVEY			
HORIZONTAL: N/A	PROJ. MGR.	JOHN	6/7/26	
	LEAD ENGR.	CEL	6/7/26	
VERTICAL N/A	FIELD MGR.		7/2/26	DESIGN MANAGER
FILE:	DRAWING: G-15			DATE: MAY 2026
ATLAS PAGE NO: 543				SHEET 15 OF 47 SHEETS

ISSUED FOR BID

LUCITY EQUIPMENT TABLE

LOCATION	DESCRIPTION	STATUS	EQUIPMENT ID	CORRECTED ID	PLANT DRAWING NO.	SPECIFICATION NO.
AB JEWELL	BFP NO. 01 - MECHANICAL	REFURBISH	ABJ-BFP-10001		M-1	44 46 16
AB JEWELL	BFP NO. 02 - MECHANICAL	REFURBISH	ABJ-BFP-10002		M-1	44 46 16
AB JEWELL	BFP NO. 03 - MECHANICAL	REFURBISH	ABJ-BFP-10003		M-1	44 46 16
AB JEWELL	CONVEYOR - CONTROL PANEL	REPLACE	ABJ-PNL-10179		M-1	40 99 90
AB JEWELL	CONVEYOR - MECHANICAL	REPLACE	ABJ-CNV-10100		M-1, M-2	44 46 13.01
AB JEWELL	LEVEL TRANSMITTER - POLY TANK NO. 01	REPLACE	ABJ-LVL-10064		M-1, M-2	40 90 01
AB JEWELL	LEVEL TRANSMITTER - POLY TANK NO. 02	REPLACE	ABJ-LVL-10065		M-1	40 90 01
AB JEWELL	LEVEL TRANSMITTER - POLY TANK NO. 03	REPLACE	ABJ-LVL-10066		M-1	40 90 01
AB JEWELL	LEVEL TRANSMITTER - POLY TANK NO. 04	REPLACE	ABJ-LVL-10067		M-1	40 90 01
AB JEWELL	AN POLY MIXING UNIT	REPLACE	ABJ-MXR-10045		M-1, M-4	44 44 63.02
AB JEWELL	CAT POLY MIXING UNIT	REPLACE	ABJ-MXR-10046		M-1, M-4	44 44 63.02
AB JEWELL	STATIC MIXER- BFP NO. 01 ANIONIC POLY	REPLACE	ABJ-MXR-10401		M-1, M-2	
AB JEWELL	POLYMER INJECTOR- BFP NO. 01 ANIONIC POLY	REPLACE	ABJ-MXR-10402		M-1, M-2	
AB JEWELL	STATIC MIXER- BFP NO. 01 CATIONIC POLY	REPLACE	ABJ-MXR-10403		M-1, M-2	
AB JEWELL	POLYMER INJECTOR- BFP NO. 01 CATIONIC POLY	REPLACE	ABJ-MXR-10404		M-1, M-2	
AB JEWELL	STATIC MIXER- BFP NO. 02 ANIONIC POLY	REPLACE	ABJ-MXR-10405		M-1, M-2	
AB JEWELL	POLYMER INJECTOR- BFP NO. 02 ANIONIC POLY	REPLACE	ABJ-MXR-10406		M-1, M-2	
AB JEWELL	STATIC MIXER- BFP NO. 02 CATIONIC POLY	REPLACE	ABJ-MXR-10407		M-1, M-2	
AB JEWELL	POLYMER INJECTOR- BFP NO. 02 CATIONIC POLY	REPLACE	ABJ-MXR-10408		M-1, M-2	
AB JEWELL	STATIC MIXER- BFP NO. 03 ANIONIC POLY	REPLACE	ABJ-MXR-10409		M-1, M-2	
AB JEWELL	POLYMER INJECTOR- BFP NO. 03 ANIONIC POLY	REPLACE	ABJ-MXR-10410		M-1, M-2	
AB JEWELL	STATIC MIXER- BFP NO. 03 CATIONIC POLY	REPLACE	ABJ-MXR-10411		M-1, M-2	
AB JEWELL	POLYMER INJECTOR- BFP NO. 03 CATIONIC POLY	REPLACE	ABJ-MXR-10412		M-1, M-2	
AB JEWELL	BLEND TANK TELESCOPING VALVE	NEW	ABJ-VLV-10804		SM-1, SM-2	
AB JEWELL	FIRE HYDRANT- NORTHWEST CORNER OF NORTH LOWER LAGOON	NEW	ABJ-HYD-10033		C-2, Y-1	33 12 19
AB JEWELL	FIRE HYDRANT- NORTHEAST CORNER OF NORTH LOWER LAGOON	NEW	ABJ-HYD-10034		C-2, Y-1	33 12 19
AB JEWELL	FIRE HYDRANT- EAST OF NORTH LOWER LAGOON	NEW	ABJ-HYD-10035		C-2, Y-2	33 12 19
AB JEWELL	FIRE HYDRANT- SOUTHEAST CORNER OF NORTH LOWER LAGOON	NEW	ABJ-HYD-10036		C-2, Y-2	33 12 19
AB JEWELL	FIRE HYDRANT- EAST OF SOUTH LOWER LAGOON	NEW	ABJ-HYD-10037		C-2, Y-2	33 12 19
AB JEWELL	FIRE HYDRANT- SOUTHEAST OF SOUTH LOWER LAGOON	NEW	ABJ-HYD-10038		C-2, Y-3	33 12 19
AB JEWELL	FIRE HYDRANT- SOUTH OF SOUTH LOWER LAGOON	NEW	ABJ-HYD-10039		C-2, Y-3	33 12 19

PATHNAME: 001-G-0016_D3910200.dgn PLOT DATE: 05/07/2026 PLOT TIME: 9:50:17 AM

VERIFY SCALE
BAR IS ONE INCH ON ORIGINAL DRAWING.
0 1"

PROFESSIONAL ENGINEER
LICENSED
B. LUKE LENARD 28364
OKLAHOMA
05/11/2026

REVISION	BY	DATE

GENERAL
LUCITY EQUIPMENT TABLE

PROJECT NO. TMUA-W 24-05

A.B. JEWELL WTP RESIDUALS IMPROVEMENTS PHASE 2

CITY OF TULSA, OKLAHOMA
WATER AND SEWER DEPARTMENT

PLANS AND ESTIMATES PREPARED BY:
Jacobs

PLAN SCALE: AS NOTED	DRAWN	SM	05/2026
	DESIGNED	JH	05/2026
PROFILE SCALE:	SURVEY		
HORIZONTAL: N/A	PROJ. MGR.		
	LEAD ENGR.		6/26
VERTICAL N/A	FIELD MGR.		7/26
FILE:	DRAWING: G-16		
ATLAS PAGE NO: 543			

APPROVED:
DESIGN MANAGER
DATE: MAY 2026
SHEET 16 OF 47 SHEETS

ISSUED FOR BID

STORM WATER MANAGEMENT PLAN

SITE DESCRIPTION

PROJECT LIMITS: THE PROJECT SITE LIES ENTIRELY WITHIN THE AB JEWELL WATER TREATMENT PLANT LOCATED NEAR TULSA, OK. GROUND DISTURBANCE WILL BE 5 FEET WIDE ALONG NEW PIPE ALIGNMENT. PLYWOOD SHALL BE LAID DOWN AROUND TRENCH AREA TO PREVENT GROUND DISTURBANCE FROM CONSTRUCTION ACTIVITIES.

PROJECT DESCRIPTION: THE PROJECT CONSISTS OF UPGRADES TO INTERIOR PROCESSES, RECONSTRUCTION OF EXTERIOR PAVEMENT, AND CONSTRUCTION OF NEW PIPELINE AROUND EXISTING LAGOONS.

SUGGESTED SEQUENCE OF EROSION CONTROL ACTIVITIES: CONTRACTOR TO INSTALL SILE FENCE AT STAGING AREA PRIOR TO USING THE STAGING AREA AND STARTING CONSTRUCTION ACTIVITIES. INSTALL INLET PROTECTION IN ANY INLETS DOWNSTREAM OF CONSTRUCTION ACTIVITY. REMOVE SEDIMENT FROM BMPs AS NEEDED TO PREVENT BMP FAILURE OR LOCALIZED FLOODING. REMOVE EXCESS DIRT FROM ROADS DAILY DURING CONSTRUCTION. INSTALL SILT FENCE DOWNHILL OF WATER PIPE INSTALLATION.

SOIL TYPE: DENNIS-RADLEY COMPLEX, 0 TO 12 PERCENT SLOPES

TOTAL AREA OF THE CONSTRUCTION SITE: 36,700 SF

ESTIMATED AREA TO BE DISTURBED: 17,466 SF

OFFSITE AREA TO BE DISTURBED: (FOR CONTRACTOR USE) _____

TOTAL IMPERVIOUS AREA PRE-CONSTRUCTION: 5,080 SF

TOTAL IMPERVIOUS AREA POST-CONSTRUCTION: 5,080 SF

POST-CONSTRUCTION RUNOFF COEFFICIENT OF THE SITE: 0.80

LATITUDE & LONGITUDE OF CENTER OF PROJECT: 36.137054, -95.764232

PROJECT WILL DISCHARGE TO:

NAME OF RECEIVING WATERS: SPUNKY CREEK

SENSITIVE WATERS OR WATERSHEDS: YES [ ] NO [X]

303(d) IMPAIRED WATERS: YES [ ] NO [X]

IF YES, LIST IMPAIRMENT: _____

LOCATED IN A TMDL: YES [ ] NO [X]

LAKE THUNDERBIRD TMDL: [ ] NO [X]

MS4 ENTITY YES [ ] NO [X]

IF YES, LOCATION: _____

NOTE:
THIS SHEET SHOULD BE USED IN CONJUNCTION WITH A DRAINAGE MAP THAT ILLUSTRATES THE DRAINAGE PATTERNS/PATHWAYS AND RECEIVING WATERS FOR THIS PROJECT. THIS SHEET SHOULD ALSO BE USED WITH THE EROSION CONTROL SUMMARIES, PAY ITEMS, & NOTES.

EROSION AND SEDIMENT CONTROLS

SOIL STABILIZATION PRACTICES:

- ____ TEMPORARY SEEDING
- X PERMANENT SODDING, SPRIGGING OR SEEDING
- ____ VEGETATIVE MULCHING
- ____ SOIL RETENTION BLANKET
- X PRESERVATION OF EXISTING VEGETATION

NOTE: TEMPORARY EROSION CONTROL METHODS MUST BE USED ON ALL DISTURBED AREAS WHERE CONSTRUCTION ACTIVITIES HAVE CEASED FOR OVER 14 DAYS. METHODS USED WILL BE AS SHOWN ON PLANS, OR AS DIRECTED BY THE ENGINEER.

STRUCTURAL PRACTICES:

- X STABILIZED CONSTRUCTION EXIT
- X TEMPORARY SILT FENCE
- ____ TEMPORARY SILT DIKES
- ____ TEMPORARY FIBER LOG
- ____ DIVERSION, INTERCEPTOR OR PERIMETER DIKES
- ____ DIVERSION, INTERCEPTOR OR PERIMETER SWALES
- ____ ROCK FILTER DAMS
- ____ TEMPORARY SLOPE DRAIN
- ____ PAVED DITCH W/ DITCH LINER PROTECTION
- ____ TEMPORARY DIVERSION CHANNELS
- ____ TEMPORARY SEDIMENT BASINS
- ____ TEMPORARY SEDIMENT TRAPS
- ____ TEMPORARY SEDIMENT FILTERS
- X TEMPORARY SEDIMENT REMOVAL
- ____ RIP RAP
- ____ INLET SEDIMENT FILTER
- ____ TEMPORARY BRUSH SEDIMENT BARRIERS
- ____ SANDBAG BERMS
- ____ TEMPORARY STREAM CROSSINGS

OFFSITE VEHICLE TRACKING:

- ____ HAUL ROADS DAMPENED FOR DUST CONTROL
- ____ LOADED HAUL TRUCKS TO BE COVERED WITH TARPAULIN
- X EXCESS DIRT ON ROAD REMOVED DAILY

NOTES:

_____

_____

_____

_____

_____

_____

_____

THE CONTRACTOR SHALL ALSO BE RESPONSIBLE FOR THE FOLLOWING:

MAINTENANCE AND INSPECTION:

ALL EROSION AND SEDIMENT CONTROLS WILL BE MAINTAINED IN GOOD WORKING ORDER FROM THE BEGINNING OF CONSTRUCTION UNTIL AN ACCEPTABLE VEGETATIVE COVER IS ESTABLISHED. INSPECTION BY THE CONTRACTOR AND ANY NECESSARY REPAIRS SHALL BE PERFORMED ONCE EVERY 7 CALENDAR DAYS AND WITHIN 24 HOURS AFTER ANY STORM EVENT GREATER THAN 0.5 INCH AS RECORDED BY A NON-FREEZING RAIN GAUGE TO BE LOCATED ON SITE. POTENTIALLY ERODIBLE AREAS, DRAINAGEWAYS, MATERIAL STORAGE, STRUCTURAL DEVICES, CONSTRUCTION ENTRANCES AND EXITS ALONG WITH EROSION AND SEDIMENT CONTROL LOCATIONS ARE EXAMPLES OF SITES THAT NEED TO BE INSPECTED.

WASTE MATERIALS:

PROPER MANAGEMENT AND DISPOSAL OF CONSTRUCTION WASTE MATERIAL IS REQUIRED BY THE CONTRACTOR. MATERIALS INCLUDE STOCKPILES, SURPLUS, DEBRIS AND ALL OTHER BY-PRODUCTS FROM THE CONSTRUCTION PROCESS. PRACTICES INCLUDE DISPOSAL, PROPER MATERIALS HANDLING, SPILL PREVENTION AND CLEANUP MEASURES. CONTROLS AND PRACTICES SHALL MEET THE REQUIREMENTS OF ALL FEDERAL, STATE AND LOCAL AGENCIES.

HAZARDOUS MATERIALS:

PROPER MANAGEMENT AND DISPOSAL OF HAZARDOUS WASTE MATERIALS IS REQUIRED. THE CONTRACTOR IS RESPONSIBLE FOR FOLLOWING MANUFACTURER'S RECOMMENDATIONS, STATE AND FEDERAL REGULATIONS TO ENSURE CORRECT HANDLING, DISPOSAL, SPILL PREVENTION AND CLEANUP MEASURES. EXAMPLES INCLUDE BUT ARE NOT LIMITED TO: PAINTS, ACIDS, CLEANING SOLVENTS, CHEMICAL ADDITIVES, CONCRETE CURING COMPOUNDS AND CONTAMINATED SOILS.

GENERAL NOTES:

A STORM WATER POLLUTION PREVENTION PLAN (SWPPP) IS REQUIRED TO COMPLY WITH THE OKLAHOMA POLLUTION DISCHARGE ELIMINATION SYSTEM (OPDES) REGULATIONS. THIS PLAN IS INITIATED DURING THE DESIGN PHASE, CONFIRMED IN THE PRE-WORK MEETINGS AND AVAILABLE ON THE JOB SITE ALONG WITH COPIES OF THE NOTICE OF INTENT (NOI) FORM AND PERMIT CERTIFICATE THAT HAVE BEEN FILED WITH THE OKLAHOMA DEPARTMENT OF ENVIRONMENTAL QUALITY (ODEQ). THE PLAN MUST BE KEPT CURRENT WITH UP-TO-DATE AMENDMENTS DURING THE PROGRESSION OF THE PROJECT. ALL CONTRACTOR OFF-SITE OPERATIONS ASSOCIATED WITH THE PROJECT MUST BE DOCUMENTED IN THE SWPPP, I.E., BORROW PITS, WORK ROADS, DISPOSAL SITES, ASPHALT/CONCRETE PLANTS, ETC. THE BASIC GOAL OF STORM WATER MANAGEMENT IS TO IMPROVE WATER QUALITY BY REDUCING POLLUTANTS IN STORM WATER DISCHARGES. RUNOFF FROM CONSTRUCTION SITES HAS A POTENTIAL FOR POLLUTION DUE TO EXPOSED SOILS AND THE PRESENCE OF HAZARDOUS MATERIALS USED IN THE CONSTRUCTION PROCESS. THE PREVENTION OF SOIL EROSION, CONTAINMENT OF HAZARDOUS MATERIALS AND/OR THE INTERCEPTION OF THESE POLLUTANTS BEFORE LEAVING THE CONSTRUCTION SITE ARE THE BEST PRACTICES FOR CONTROLLING STORM WATER POLLUTION.

THE FOLLOWING SECTIONS OF THE 2019 ODOT STANDARD SPECIFICATIONS SHOULD BE NOTED:

103.05 BONDING REQUIREMENTS
104.10 FINAL CLEANING UP
104.12 CONTRACTOR'S RESPONSIBILITY FOR WORK
104.13 ENVIRONMENTAL PROTECTION
106.08 STORAGE AND HANDLING OF MATERIAL
107.01 LAWS, RULES AND REGULATIONS TO BE OBSERVED
107.20 STORM WATER MANAGEMENT
220 MANAGEMENT OF EROSION, SEDIMENTATION AND STORM WATER POLLUTION PREVENTION AND CONTROL
221 TEMPORARY SEDIMENT CONTROL

IN ADDITION:

"ODEQ GENERAL PERMIT (OKR10) FOR STORM WATER DISCHARGES FROM CONSTRUCTION ACTIVITIES WITHIN THE STATE OF OKLAHOMA." ODEQ, WATER QUALITY DIVISION, NOVEMBER 1, 2023.

ADDITIONAL PERMITS REQUIRED FROM OKLAHOMA WATER RESOURCES BOARD AND/OR MUNCIPALITY FOR USE OF SURFACE, GROUND OR CITY WATER SOURCES FOR ACTIVITIES SUCH AS WATERING.

OKIE 811 Know what's below 811 before you dig.

LICENSED PROFESSIONAL ENGINEER SAMUEL P. CHANDLER 35637 OKLAHOMA
05/11/2026

VERIFY SCALE
BAR IS ONE INCH ON ORIGINAL DRAWING. 0 1"

REVISION	BY	DATE

CIVIL
STORMWATER MANAGEMENT PLAN

PROJECT NO. TMUA-W 24-05

A.B. JEWELL WTP RESIDUALS IMPROVEMENTS PHASE 2

CITY OF TULSA, OKLAHOMA
WATER AND SEWER DEPARTMENT

PLANS AND ESTIMATES PREPARED BY: Jacobs

PLAN SCALE: AS NOTED	DRAWN	PS	05/2026	APPROVED:
	DESIGNED	EI	05/2026	
PROFILE SCALE:	SURVEY			
HORIZONTAL: N/A	PROJ. MGR.			
	LEAD ENGR.		4/1/26	
VERTICAL N/A	FIELD MGR.		7/26	DESIGN MANAGER
FILE:	DRAWING: C-1			DATE: MAY 2026
ATLAS PAGE NO: 543				SHEET 17 OF 47 SHEETS

PATHNAME: 050-C-0001_D3910200.dgn PLOT DATE: 05/06/2026 PLOT TIME: 10:19:09 AM

ISSUED FOR BID

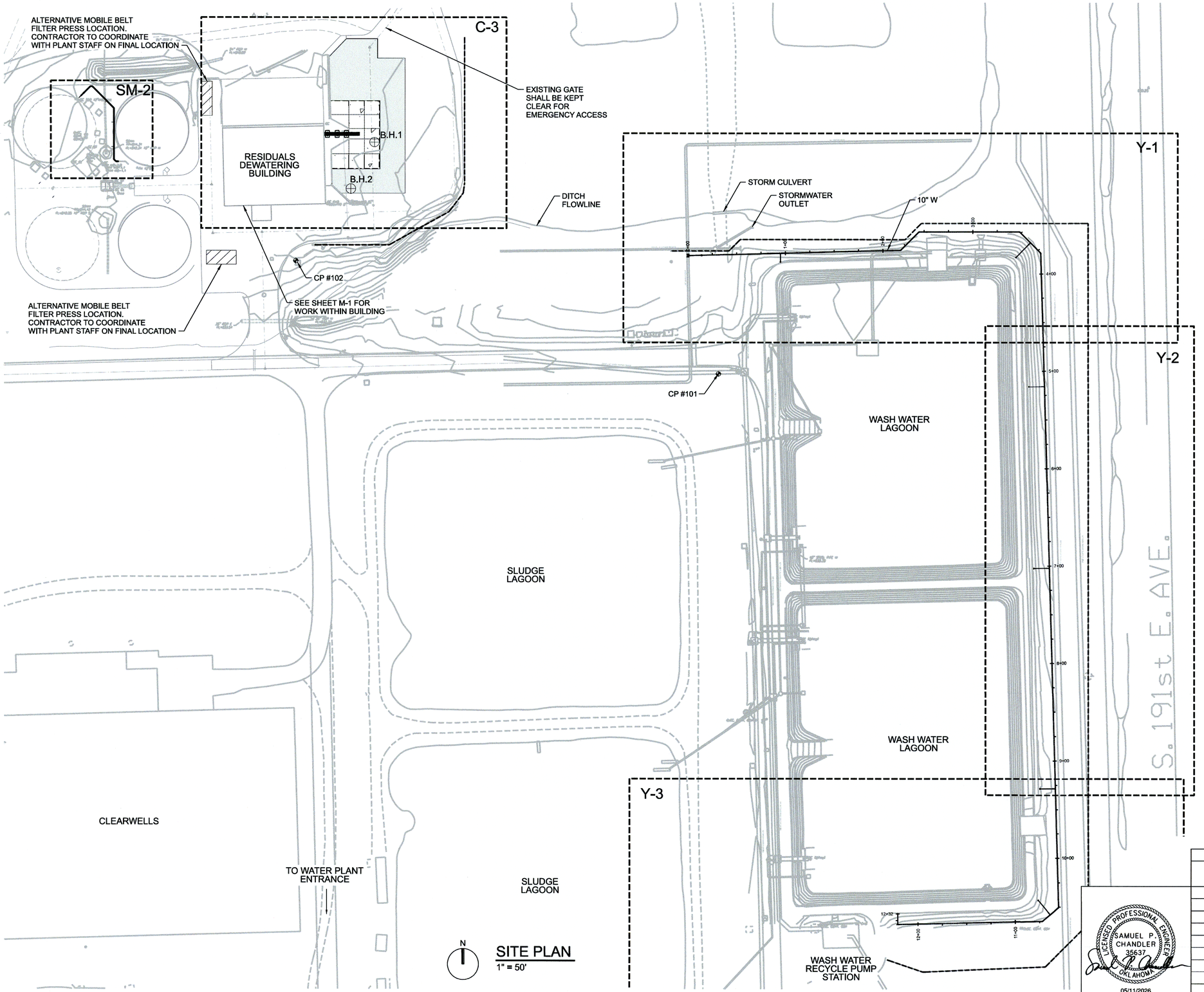

SITE PLAN
1" = 50'

0 50 100 150
1"=50'-0"

GENERAL NOTES

1. GROUNDWATER WAS NOT SITED ON PREVIOUS BORES, BUT DIFFERING FIELD CONDITIONS MAY LEAD TO SHALLOWER GROUNDWATER CONDITIONS THAN ANTICIPATED.

CONTROL POINT TABLE

POINT NUMBER	NORTHING	EASTING	ELEVATION
101	421250.09	2628940.40	637.25
102	421366.18	2628506.69	644.75

BORE HOLE NO.	LOCATION	
	LATITUDE	LONGITUDE
1	36.1370°	-95.7644°
2	36.1369°	-95.7644°

VERIFY SCALE
BAR IS ONE INCH ON ORIGINAL DRAWING.
0 1"

REVISION	BY	DATE

LICENSED PROFESSIONAL ENGINEER
SAMUEL P. CHANDLER
35637
OKLAHOMA
05/11/2026

CIVIL
SITE PLAN

PROJECT NO. TMUA-W 24-05

A.B. JEWELL WTP RESIDUALS IMPROVEMENTS PHASE 2

CITY OF TULSA, OKLAHOMA
WATER AND SEWER DEPARTMENT

PLANS AND ESTIMATES PREPARED BY:
Jacobs

PLAN SCALE: 1"=50'-0"	DRAWN	PS	05/2026	APPROVED:
	DESIGNED	EI	05/2026	
PROFILE SCALE:	SURVEY			
HORIZONTAL: N/A	PROJ. MGR.	KRM	6/26	
	LEAD ENGR.	CKK	6/26	
VERTICAL N/A	FIELD MGR.		7/26	DESIGN MANAGER
FILE:	DRAWING: C-2			DATE: MAY 2026
ATLAS PAGE NO: 543				SHEET 18 OF 47 SHEETS

ISSUED FOR BID

PATHNAME: 050-C-2001_D3910200.DGN PLOT DATE: 05/06/2026 PLOT TIME: 10:23:42 AM

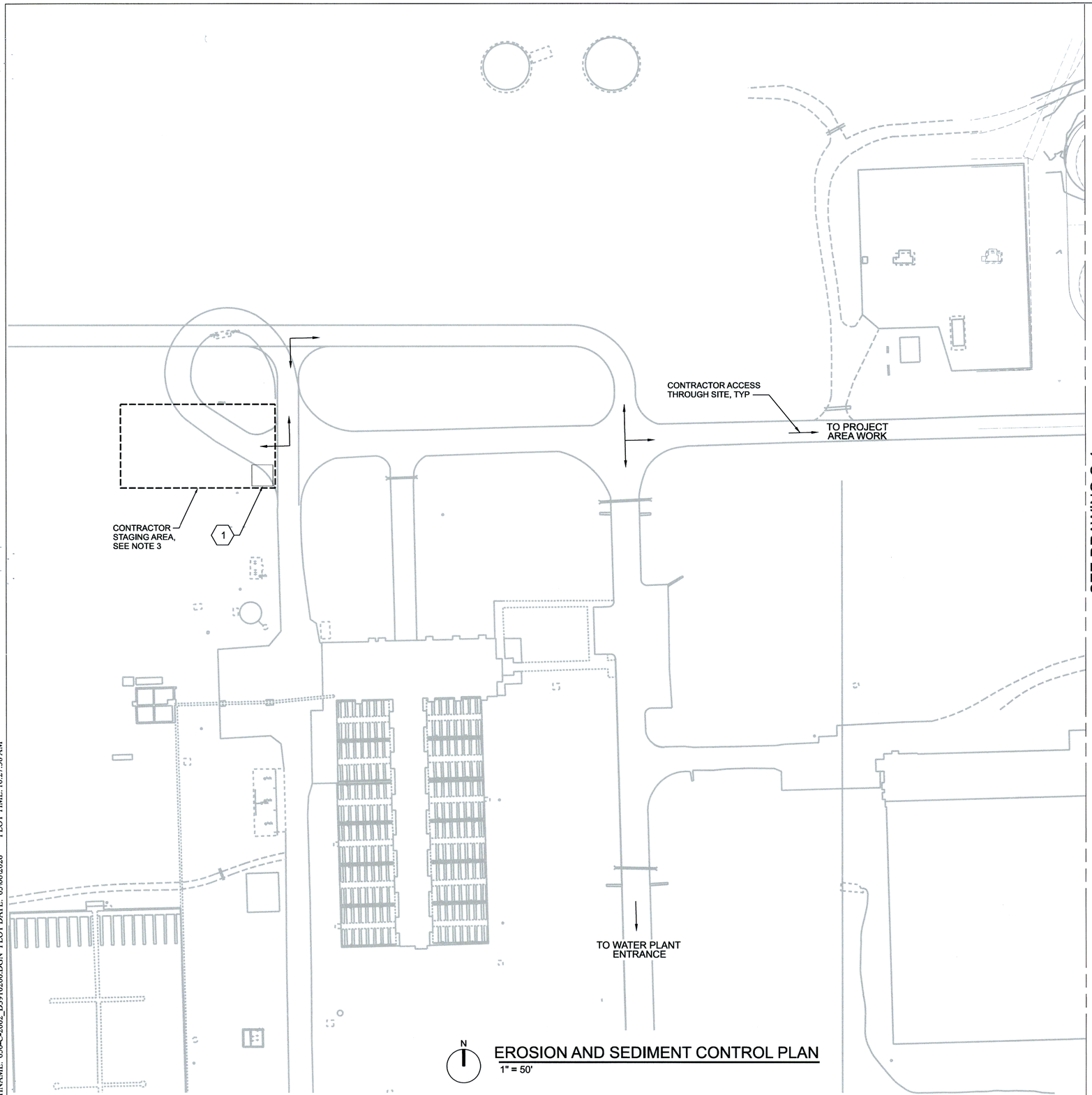

EROSION AND SEDIMENT CONTROL PLAN
1" = 50'

GENERAL NOTES

1. CONTRACTOR IS RESPONSIBLE FOR REMOVAL AND DISPOSAL OF ALL EROSION CONTROL MEASURES, INCLUDING ANY RESIDUAL CONCRETE IN THEW WASHOUT AREA, AT THE COMPLETION OF CONSTRUCTION ACTIVITIES.
2. CONTRACTOR SHALL COMPLETE RESTORATION OF DISTURBED AREAS PER PROJECT SPECIFICATIONS AND STORMWATER MANAGEMENT PERMIT REQUIREMENTS.
3. LAYDOWN AREA HAS EXISTING GRAVEL SURFACING.

SHEET KEYNOTES

1. 20' X 20' CONCRETE WASHOUT, SEE ODOT STD. DWG. R-13.

0 50 100 150
1"=50'-0"

CIVIL
EROSION AND SEDIMENT CONTROL PLAN

PROJECT NO. TMUA-W 24-05

A.B. JEWELL WTP RESIDUALS IMPROVEMENTS PHASE 2

CITY OF TULSA, OKLAHOMA
WATER AND SEWER DEPARTMENT

PLANS AND ESTIMATES PREPARED BY: Jacobs

VERIFY SCALE
BAR IS ONE INCH ON ORIGINAL DRAWING.
0 1"

REVISION	BY	DATE

LICENSED PROFESSIONAL ENGINEER SAMUEL P. CHANDLER 35637 OKLAHOMA
05/11/2026

PLAN SCALE: 1"=50'-0"	DRAWN	PS	05/2026	APPROVED:
	DESIGNED	EI	05/2026	
PROFILE SCALE:	SURVEY			
HORIZONTAL: N/A	PROJ. MGR.	NHN	6/26	
	LEAD ENGR.	LEW	6/26	
VERTICAL N/A	FIELD MGR.	[illegible]	7/26	DESIGN MANAGER
FILE:	DRAWING: C-3			DATE: MAY 2026
ATLAS PAGE NO: 543				SHEET 19 OF 47 SHEETS

ISSUED FOR BID

PATHNAME: 050-C-2002_D3910200.DGN PLOT DATE: 05\06\2026 PLOT TIME: 10:27:38 AM

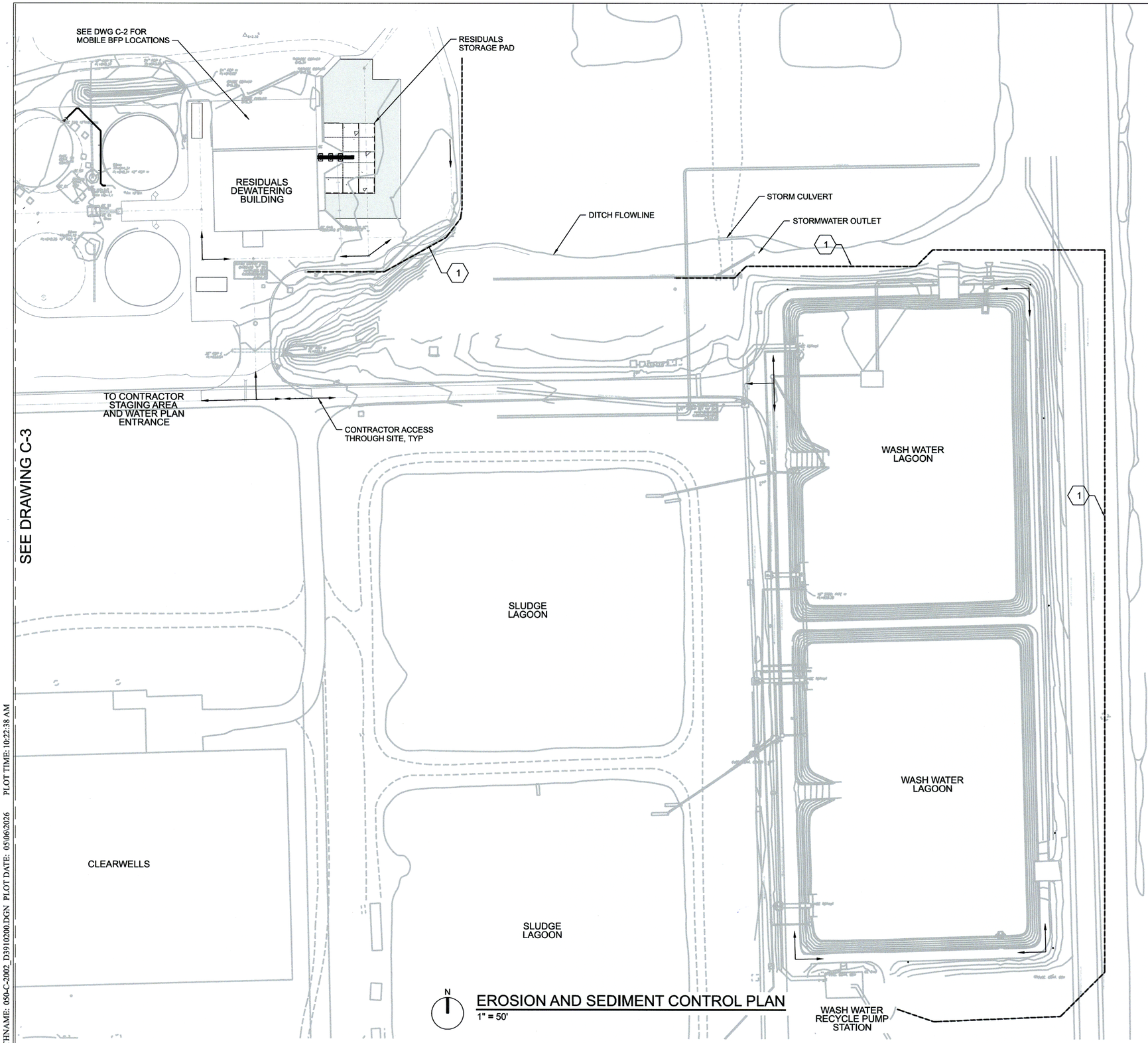

N

EROSION AND SEDIMENT CONTROL PLAN

1" = 50'

GENERAL NOTES

1. CONTRACTOR IS RESPONSIBLE FOR REMOVAL AND DISPOSAL OF ALL EROSION CONTROL MEASURES, INCLUDING ANY RESIDUAL CONCRETE IN THE WASHOUT AREA, AT THE COMPLETION OF CONSTRUCTION ACTIVITIES.
2. CONTRACTOR SHALL COMPLETE RESTORATION OF DISTURBED AREAS PER PROJECT SPECIFICATIONS AND STORMWATER MANAGEMENT PERMIT REQUIREMENTS.

SHEET KEYNOTES

1. SILT FENCE OR APPROVED EQUAL, SEE CITY OF TULSA STD. DWG. 126.

0 50 100 150
1"=50'-0"

CIVIL
EROSION AND SEDIMENT CONTROL PLAN

PROJECT NO. TMUA-W 24-05

A.B. JEWELL WTP RESIDUALS IMPROVEMENTS PHASE 2

CITY OF TULSA, OKLAHOMA
WATER AND SEWER DEPARTMENT

PLANS AND ESTIMATES PREPARED BY:
Jacobs

VERIFY SCALE
BAR IS ONE INCH ON ORIGINAL DRAWING.
0 1"

REVISION	BY	DATE

LICENSED PROFESSIONAL ENGINEER
SAMUEL P. CHANDLER
35637
OKLAHOMA
05/11/2026

PLAN SCALE: 1"=50'-0"	DRAWN	PS	05/2026	APPROVED:
	DESIGNED	EI	05/2026	
PROFILE SCALE:	SURVEY			
HORIZONTAL: N/A	PROJ. MGR.	MM	6/26	
	LEAD ENGR.	CSW	6/26	
VERTICAL N/A	FIELD MGR.		7/26	DESIGN MANAGER
FILE:	DRAWING: C-4			DATE: MAY 2026
ATLAS PAGE NO: 543				SHEET 20 OF 47 SHEETS

ISSUED FOR BID

PATHNAME: 050-C-2002_D3910200.DGN PLOT DATE: 05\06\2026 PLOT TIME: 10:22:38 AM

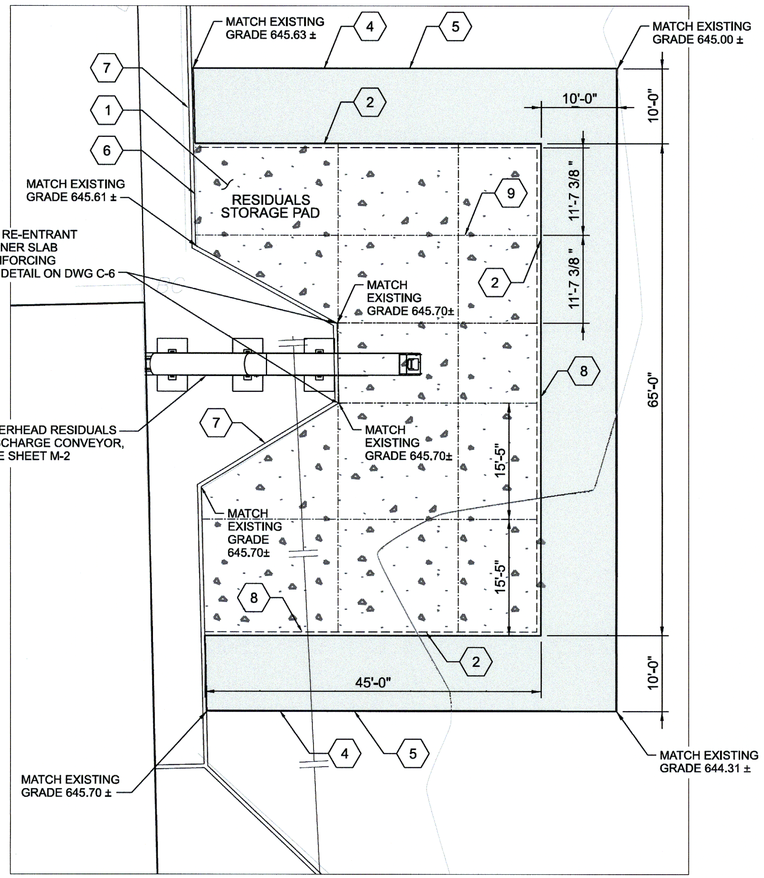

BID ALTERNATIVE FOR PAVEMENT WORK

NTS

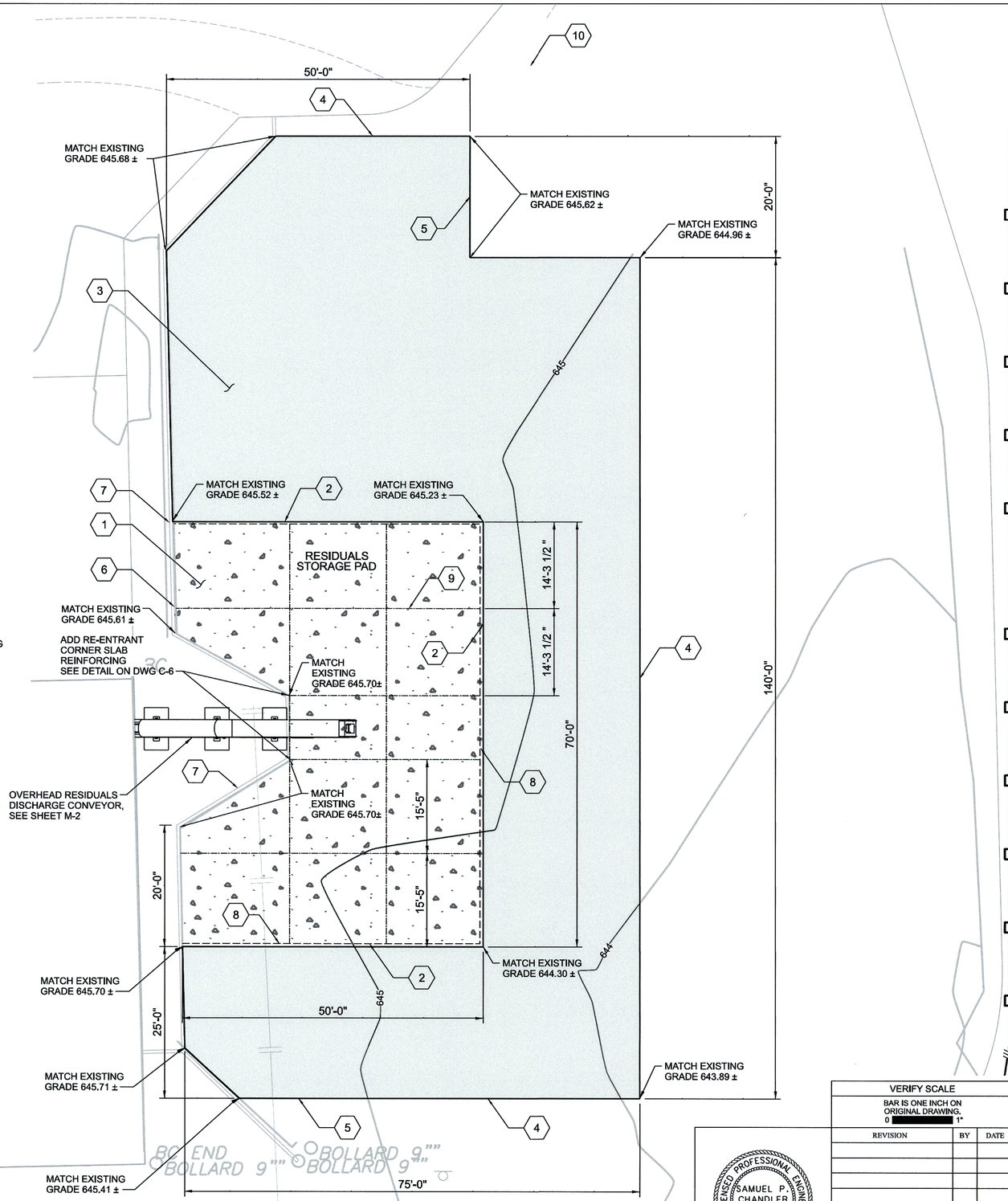

SITE PLAN

1" = 10'

SHEET KEYNOTES

1. INSTALL 8" CONCRETE WORKING APRON SLAB-ON-GRADE WITH #5 AT 12" (MAX) ON CENTER EACH WAY CENTRED IN DEPTH OF SLAB OVER 6" TYPE 'A' AGGREGATE BASE, SEE DETAIL 3213-240. CONCRETE TO BE BROOM FINISH.
2. INSTALL CONCRETE TO ASPHALT TRANSITION, SEE DETAIL 3213-250.
3. INSTALL 5" ASPHALT PAVEMENT ON EXISTING COMPACTED BASE, SEE DETAIL 3212-210. FILL IN LOW SPOTS IN BASE ROCK WITH 3/4"-0" CRUSHED AGGREGATE AND COMPACT LOOSE BASE ROCK PRIOR TO PAVING.
4. INSTALL APHALT PAVEMENT CONNECTION, SEE DETAIL 3212-215.
5. SAWCUT ACP, TYP.
6. INSTALL EXPANSION JOINT BETWEEN EXISTING CONCRETE WALL AND NEW P.C.C. PAVEMENT.
7. CONTRACTOR SHALL PROTECT EXISTING CONCRETE WALL AND FOOTER DURING CONSTRUCTION WORK. DO NOT UNDERMINE OR DAMAGE THE FOOTING DURING EXCAVATION.
8. THICKENED SLAB EDGE (TYP.) ALONG FREE EDGES OF WORKING APRON SLAB. SEE THICKENED EDGE DETAIL ON DWG C-6.
9. CONTRACTION JOINT (TYP.).
10. EXISTING GATE SHALL BE KEPT CLEAR FOR EMERGENCY EGRESS.

SEE SHEET C-3 FOR EROSION AND SEDIMENT CONTROL MEASURES.

0 10 20 30

1"=10'-0"

CIVIL
PAVEMENT PLAN

PROJECT NO. TMUA-W 24-05

A.B. JEWELL WTP RESIDUALS IMPROVEMENTS PHASE 2

CITY OF TULSA, OKLAHOMA
WATER AND SEWER DEPARTMENT

PLANS AND ESTIMATES PREPARED BY: Jacobs

VERIFY SCALE
BAR IS ONE INCH ON ORIGINAL DRAWING.
0 1"

REVISION	BY	DATE

LICENSED PROFESSIONAL ENGINEER SAMUEL P. CHANDLER 35637 OKLAHOMA
05/11/2026

PLAN SCALE: 1"=10'-0"	DRAWN	PS	05/2026	APPROVED:
	DESIGNED	EI	05/2026	
PROFILE SCALE:	SURVEY			
HORIZONTAL: N/A	PROJ. MGR.	NHN	6/26	
	LEAD ENGR.	CEW	6/26	
VERTICAL N/A	FIELD MGR.		7/26	DESIGN MANAGER
FILE:	DRAWING: C-5			DATE: MAY 2026
ATLAS PAGE NO: 543				SHEET 21 OF 47 SHEETS

ISSUED FOR BID

PATHNAME: 050-C-2003_D3910200.DGN PLOT DATE: 05\06\2026 PLOT TIME: 10:18:18 AM

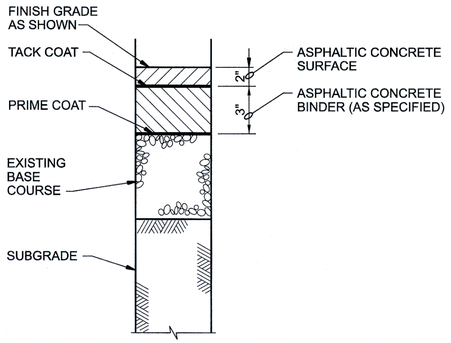

NOTE:

PROVIDE ASPHALT CONCRETE PAVEMENT SUPERPAVE TYPE S3.

ASPHALT CONCRETE PAVEMENT

NTS

3212-210

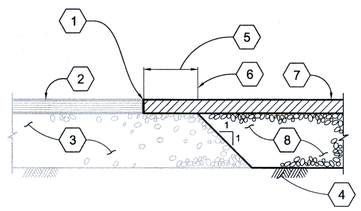

1. CRACK SEAL, TYP, SEE NOTE
2. EXISTING PAVEMENT
3. EXISTING BASE COURSE
4. PREPARED SUBGRADE
5. SAW CUT 2' MIN JUST PRIOR TO PAVING
6. EDGE OF EXISTING PAVEMENT
7. NEW PAVEMENT
8. NEW BASE COURSE

NOTE:

A. PAINT EDGE OF EXISTING ASPHALT WITH TACK COAT PRIOR TO PAVING. CRACK SEAL JOINT AFTER PAVING OPERATION HAS BEEN COMPLETED.

PAVEMENT CONNECTION

NTS

3212-215

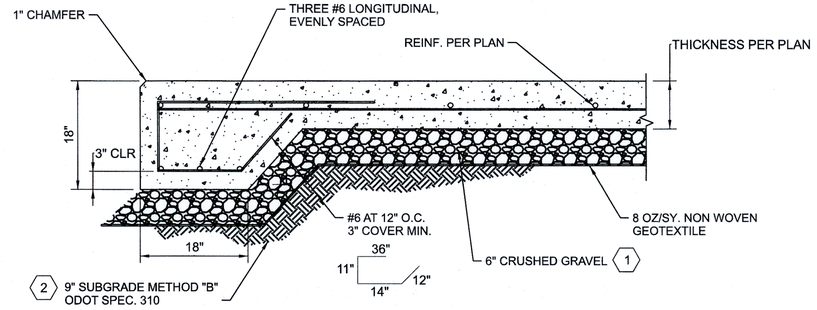

NOTE:

1. DENSITY REQUIRED IS 95% PER AASHTO T99.
2. TEST ROLLING REQUIRED IN ACCORDANCE WITH ODOT SPECIFICATIONS SECTION 203.

THICKENED EDGE DETAIL

NTS

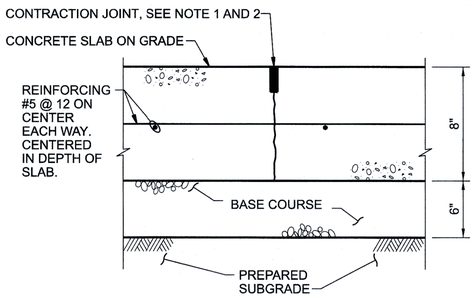

NOTES:

1. CONTRACTION JOINT SHALL BE MADE, CLEANED WITH COMPRESSED AIR, AND FILLED WITH SEALANT AS SPECIFIED.
2. CONCRETE JOINT SPACING: AS SHOWN.
3. INSTALL 1/2" PREMOLDED JOINT FILLER FULL DEPTH WHERE CONCRETE PAVEMENT ABUTS CONCRETE CURB, BUILDING OR ANY RIGID STRUCTURE.
4. PROVIDE CLASS A CONCRETE IN ACCORDANCE WITH OKLAHOMA DEPARTMENT OF TRANSPORTATION STANDARD SPECIFICATIONS.

CONCRETE PAVEMENT

NTS

3213-240

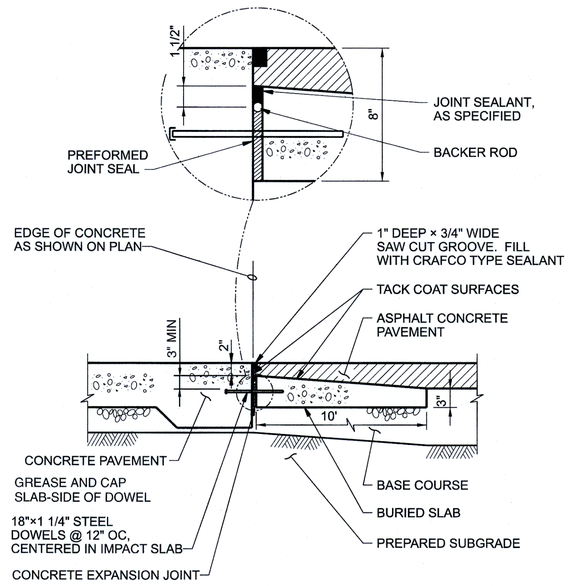

NOTE:

CONCRETE SLAB REINFORCING NOT SHOWN FOR CLARITY.

CONCRETE TO ASPHALT TRANSITION

NTS

3213-250

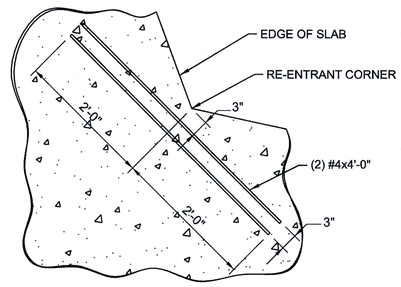

RE-ENTRANT CORNER SLAB REINFORCEMENT

NTS

VERIFY SCALE

BAR IS ONE INCH ON ORIGINAL DRAWING.
0 1"

LICENSED PROFESSIONAL ENGINEER
SAMUEL P. CHANDLER
25637
OKLAHOMA
05/11/2026

REVISION	BY	DATE

CIVIL
STANDARD DETAILS

PROJECT NO. TMUA-W 24-05

A.B. JEWELL WTP RESIDUALS IMPROVEMENTS PHASE 2

CITY OF TULSA, OKLAHOMA
WATER AND SEWER DEPARTMENT

PLANS AND ESTIMATES PREPARED BY:
Jacobs

PLAN SCALE: AS NOTED	DRAWN	PS	05/2026	APPROVED:
	DESIGNED	EI	05/2026	
PROFILE SCALE:	SURVEY			
HORIZONTAL: N/A	PROJ. MGR.	NHW	6/26	
	LEAD ENGR.	CEW	6/26	
VERTICAL N/A	FIELD MGR.		6/26	DESIGN MANAGER
FILE:	DRAWING: C-6			DATE: MAY 2026
ATLAS PAGE NO: 543				SHEET 22 OF 47 SHEETS

ISSUED FOR BID

PATHNAME: 050-C-5001_D3910200.DGN PLOT DATE: 05\06\2026 PLOT TIME: 10:26:45 AM

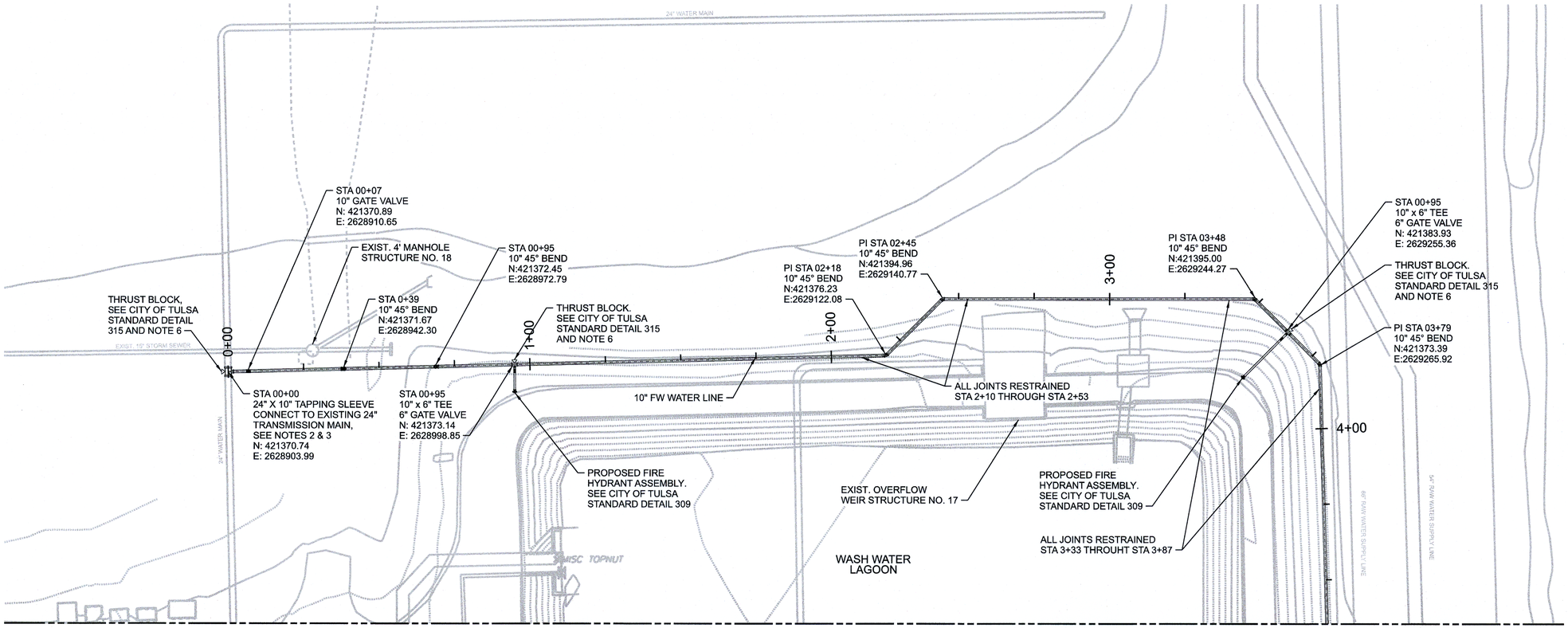

MATCHLINE - SEE SHEET Y-2

N

PLAN
1" = 20'

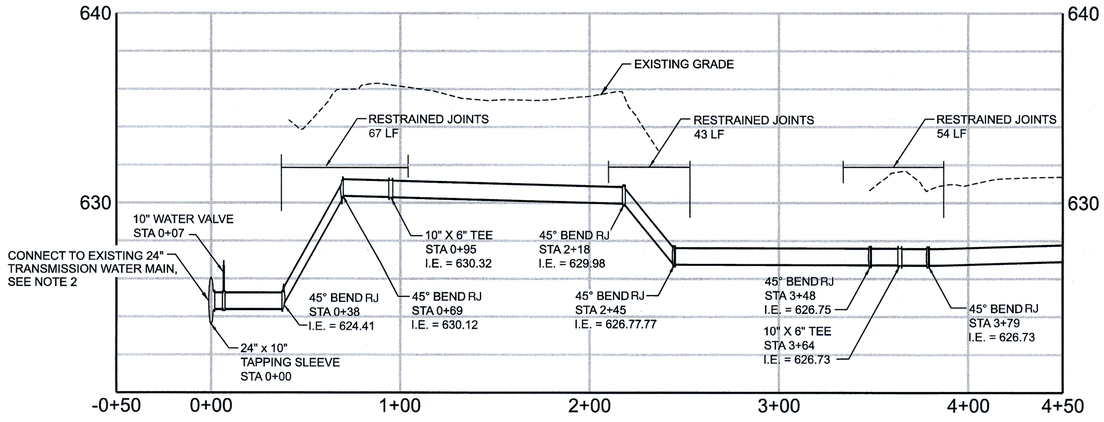

PROFILE
1"=40' HORIZONTAL
1"=4' VERTICAL

GENERAL NOTES

1. PLANS HAVE BEEN DEVELOPED WITH THE USE OF EXISTING BASEMAPS, RECORD DRAWINGS AND TOPOGRAPHIC SURVEY. BURIED UTILITIES SHOWN ARE NOT ALL INCLUSIVE NOR HAVE BEEN FIELD VERIFIED. CONTRACTOR SHALL EXERCISE CAUTION IN AREAS NEARBY APPURTENANCES VISIBLE AND ABOVE GRADE.
2. CONTRACTOR TO FIELD VERIFY UTILITY DIAMETER, HORIZONTAL AND VERTICAL LOCATION OF UTILITY PRIOR TO ORDERING MATERIALS.
3. CONTRACTOR SHALL PROVIDE NOTIFICATION TO THE OWNER A MINIMUM OF 14 DAYS PRIOR TO INSTALLING THE HOT TAP CONNECTION. THE CONTRACTOR SHALL POTHOLE THE PROPOSED CONNECTION TO VERIFY THE OUTSIDE DIAMETER, LOCATION AND TYPE OF PIPE MATERIAL TO BE TAPPED. TAPPING SLEEVES SHALL BE INSTALLED IN ACCORDANCE WITH THE MANUFACTURER'S INSTRUCTIONS. THE PIPE BARREL SHALL BE THOROUGHLY CLEANED WITH A WIRE BRUSH TO PROVIDE A SMOOTH, HARD SURFACE FOR THE SLEEVE. THE SLEEVE SHALL BE SUPPORTED INDEPENDENT OF THE PIPE. THE SLEEVE SHALL BE PRESSURE TESTED TO A MINIMUM OF 110 PSI. THRUST BLOCKS SHALL BE PROVIDED AT THE TAPPING SLEEVE PER THE DRAWINGS. THE TAPPING VALVE SHALL BE INSTALLED ON THE TAPPING SLEEVE. ALL FLANGE BOLTS SHALL BE TYPE 316 STAINLESS STEEL. THE HOT TAP INTO THE EXISTING PIPE SHALL BE MADE USING THE APPROPRIATE TYPE OF CUTTING MACHINE AND SHELL CUTTING BIT FOR THE MATERIAL BEING TAPPED. THE TAPPING MACHINE SHALL BE OPERATED PER THE MANUFACTURER'S OPERATING INSTRUCTIONS. PROPER CARE SHALL BE TAKEN TO PREVENT CUTTING MATERIAL FROM ENTERING THE PIPELINE. THE TAPPING COUPON MUST BE EXTRACTED. THE EXTERIOR MORTAR COATING ON WELDED STEEL PIPE SHALL BE REPAIRED IN ACCORDANCE WITH AWWA REQUIREMENTS. THE INTERIOR OF THE TAPPING VALVE AND CONNECTING PIPING SHALL BE DISINFECTED AND SPRAYED WITH A SODIUM HYPOCHLORITE SOLUTION PRIOR TO COMPLETING THE CONNECTION.
4. DEFLECT PVC PIPE ALIGNMENT AT LOCATIONS INDICATED IN PLAN. USE SOLID SLEEVE OR FLUID-TITE HIGH DEFLECTION SOLID COUPLINGS FOR CHANGES IN ALIGNMENT UP TO 5°. BELL JOINTS MAY BE DEFLECTED TO THE MANUFACTURER'S ALLOWABLE DEFLECTION ANGLE. LONGITUDINAL BENDING OF PIPE IS NOT PERMITTED.
5. BACKFILL TRENCH AND RESTORE SURFACE PER CITY OF TULSA STANDARD DETAIL 305.
6. FRAMING FOR THRUST BLOCK TO BE INSPECTED AND APPROVED Y CITY OF TULSA PRIOR TO PURING OF CONCRETE.

0 20 40 60
1"=20'

VERIFY SCALE
BAR IS ONE INCH ON ORIGINAL DRAWING.
0 1"

REVISION	BY	DATE

LICENSED PROFESSIONAL ENGINEER
SAMUEL P CHANDLER
35637
OKLAHOMA
05/11/2026

YARD PIPING
PLAN VIEWS 1 OF 3

PROJECT NO. TMUA-W 24-05

A.B. JEWELL WTP RESIDUALS IMPROVEMENTS PHASE 2

CITY OF TULSA, OKLAHOMA
WATER AND SEWER DEPARTMENT

PLANS AND ESTIMATES PREPARED BY:
Jacobs

PLAN SCALE: 1"=20'-0"	DRAWN	KS	05/2026	APPROVED:
	DESIGNED	EI	05/2026	
PROFILE SCALE:	SURVEY			
HORIZONTAL: 1"=40'-0"	PROJ. MGR.	MHW	6/26	
VERTICAL 1"=4'-0"	LEAD ENGR.	CEW	6/26	DESIGN MANAGER
	FIELD MGR.		7/26	
FILE:	DRAWING: Y-1			DATE: MAY 2026
ATLAS PAGE NO: 543				SHEET 23 OF 47 SHEETS

ISSUED FOR BID

PATHNAME: 050-Y-2001_D3910200.DGN PLOT DATE: 05/08/2026 PLOT TIME: 1:49:07 PM

GENERAL NOTES

1. PLANS HAVE BEEN DEVELOPED WITH THE USE OF EXISTING BASEMAPS, RECORD DRAWINGS AND TOPOGRAPHIC SURVEY. BURIED UTILITIES SHOWN ARE NOT ALL INCLUSIVE NOR HAVE BEEN FIELD VERIFIED. CONTRACTOR SHALL EXERCISE CAUTION IN AREAS NEARBY APPURTENANCES VISIBLE AND ABOVE GRADE.
2. DEFLECT PVC PIPE ALIGNMENT AT LOCATIONS INDICATED IN PLAN. USE SOLID SLEEVE OR FLUID-TITE HIGH DEFLECTION SOLID COUPLINGS FOR CHANGES IN ALIGNMENT UP TO 5°. BELL JOINTS MAY BE DEFLECTED TO THE MANUFACTURER'S ALLOWABLE DEFLECTION ANGLE. LONGITUDINAL BENDING OF PIPE IS NOT PERMITTED.
3. BACKFILL TRENCH AND RESTORE SURFACE PER CITY OF TULSA STANDARD DETAIL 305.
4. FRAMING FOR THRUST BLOCK TO BE INSPECTED AND APPROVED BY CITY OF TULSA PRIOR TO POURING OF CONCRETE.

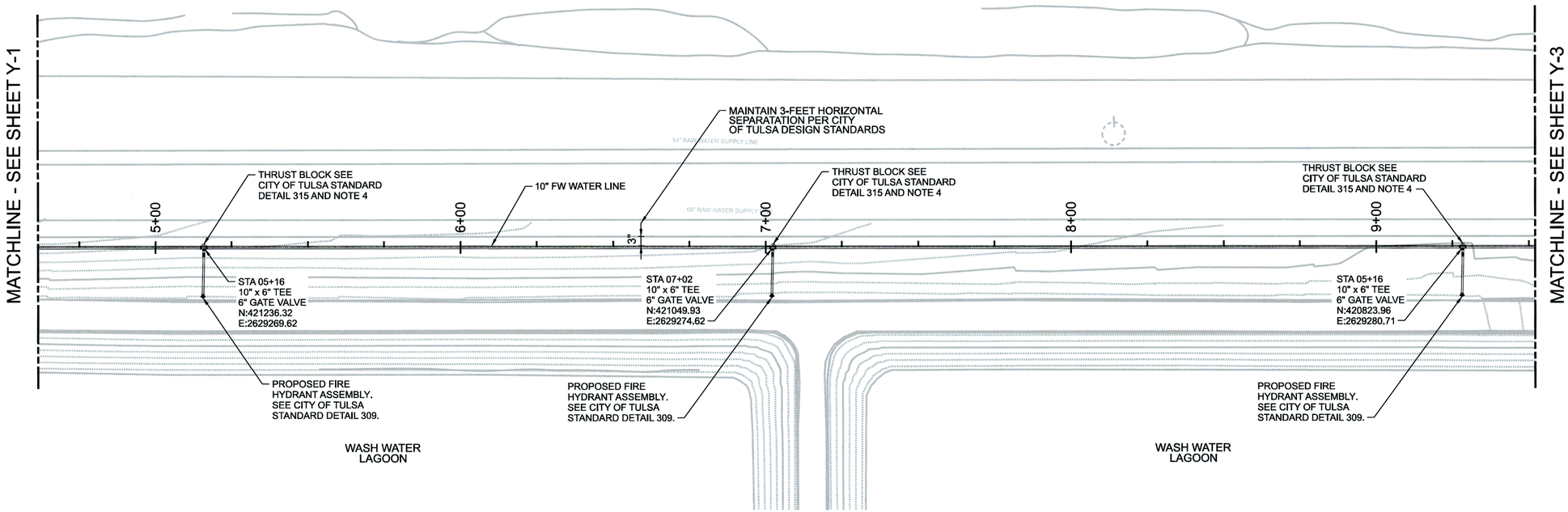

PLAN
1" = 20'

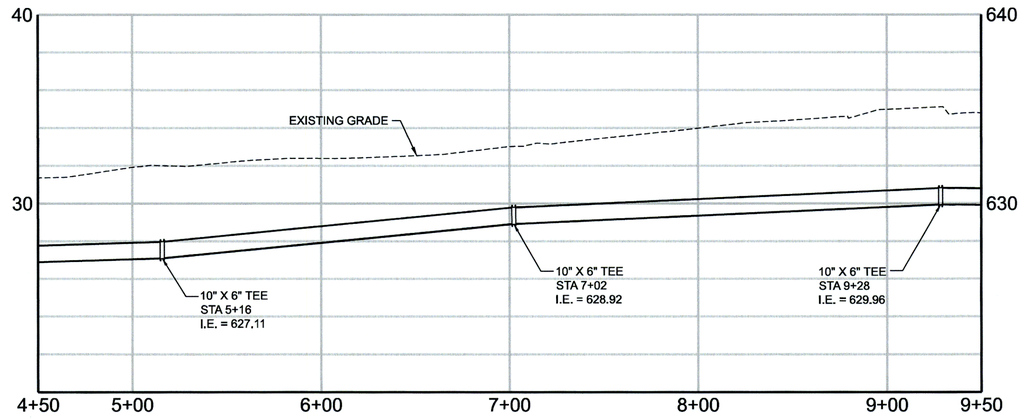

PROFILE
1"=40' HORIZONTAL
1"=4' VERTICAL

LICENSED PROFESSIONAL ENGINEER
SAMUEL P. CHANDLER
35637
OKLAHOMA
05/11/2026

VERIFY SCALE
BAR IS ONE INCH ON ORIGINAL DRAWING.
0 1"

REVISION	BY	DATE

YARD PIPING
PLAN VIEWS 2 OF 3

PROJECT NO. TMUA-W 24-05

A.B. JEWELL WTP RESIDUALS IMPROVEMENTS PHASE 2

CITY OF TULSA, OKLAHOMA
WATER AND SEWER DEPARTMENT

PLANS AND ESTIMATES PREPARED BY: Jacobs

PLAN SCALE: 1"=20'-0"	DRAWN	KS	05/2026	APPROVED:
	DESIGNED	EI	05/2026	
PROFILE SCALE:	SURVEY			
HORIZONTAL: 1"=40'-0"	PROJ. MGR.	MAN	6/26	
	LEAD ENGR.	CEW	6/26	
VERTICAL 1"=4'-0"	FIELD MGR.	[illegible]	7/26	DESIGN MANAGER
FILE:	DRAWING: Y-2			DATE: MAY 2026
ATLAS PAGE NO: 543				SHEET 24 OF 47 SHEETS

ISSUED FOR BID

PATHNAME: 050-Y-2002_D3910200.DGN PLOT DATE: 05\08\2026 PLOT TIME: 10:37:44 AM

GENERAL NOTES

1. PLANS HAVE BEEN DEVELOPED WITH THE USE OF EXISTING BASEMAPS, RECORD DRAWINGS AND TOPOGRAPHIC SURVEY. BURIED UTILITIES SHOWN ARE NOT ALL INCLUSIVE NOR HAVE BEEN FIELD VERIFIED. CONTRACTOR SHALL EXERCISE CAUTION IN AREAS NEARBY APPURTENANCES VISIBLE AND ABOVE GRADE.
2. DEFLECT PVC PIPE ALIGNMENT AT LOCATIONS INDICATED IN PLAN. USE SOLID SLEEVE OR FLUID-TITE HIGH DEFLECTION SOLID COUPLINGS FOR CHANGES IN ALIGNMENT UP TO 5°. BELL JOINTS MAY BE DEFLECTED TO THE MANUFACTURER'S ALLOWABLE DEFLECTION ANGLE OF THE PIPE. LONGITUDINAL BENDING OF PIPE IS NOT PERMITTED.
3. BACKFILL TRENCH AND RESTORE SURFACE PER CITY OF TULSA STANDARD DETAIL 305.
4. FRAMING FOR THRUST BLOCK TO BE INSPECTED AND APPROVED BY CITY OF TULSA PRIOR TO POURING OF CONCRETE.

MATCHLINE - SEE SHEET Y-2

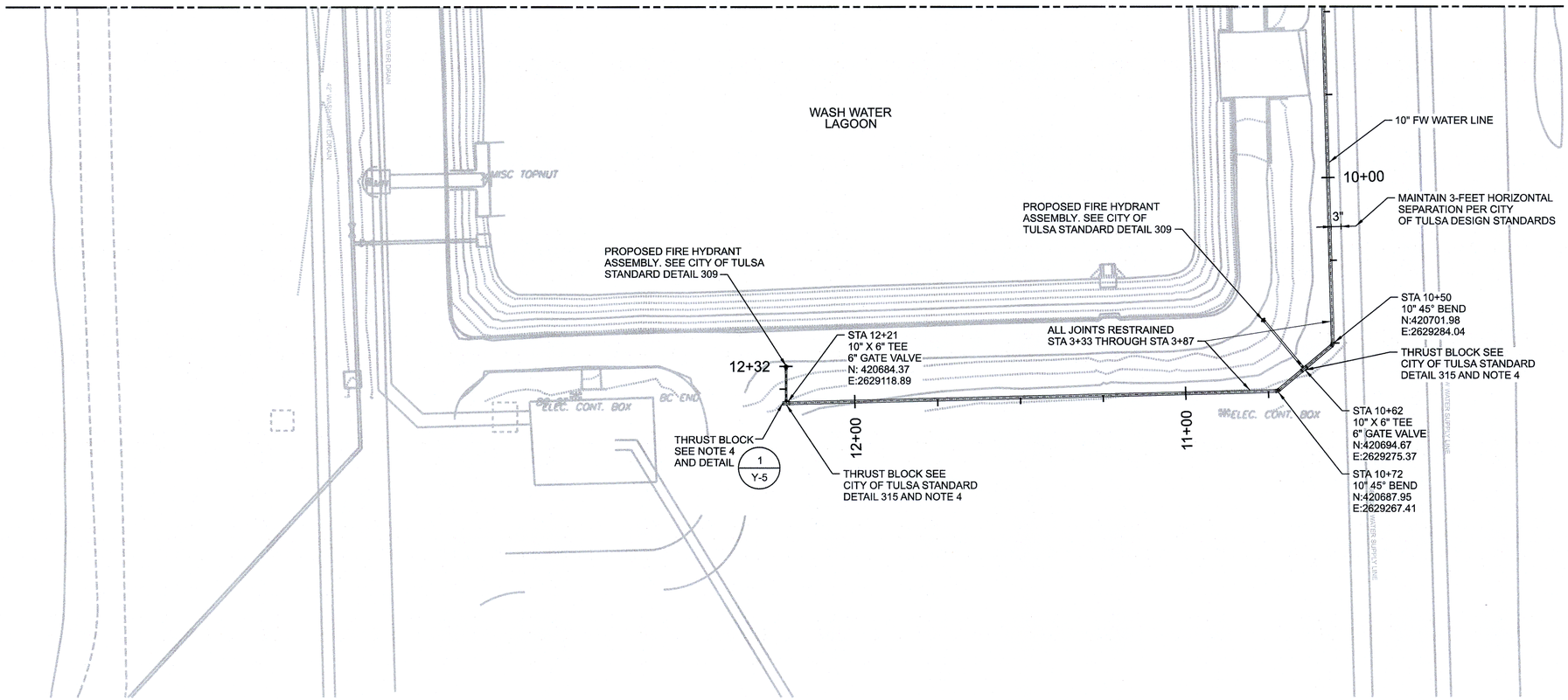

0 20 40 60
1"=20'

N

PLAN
1" = 20'

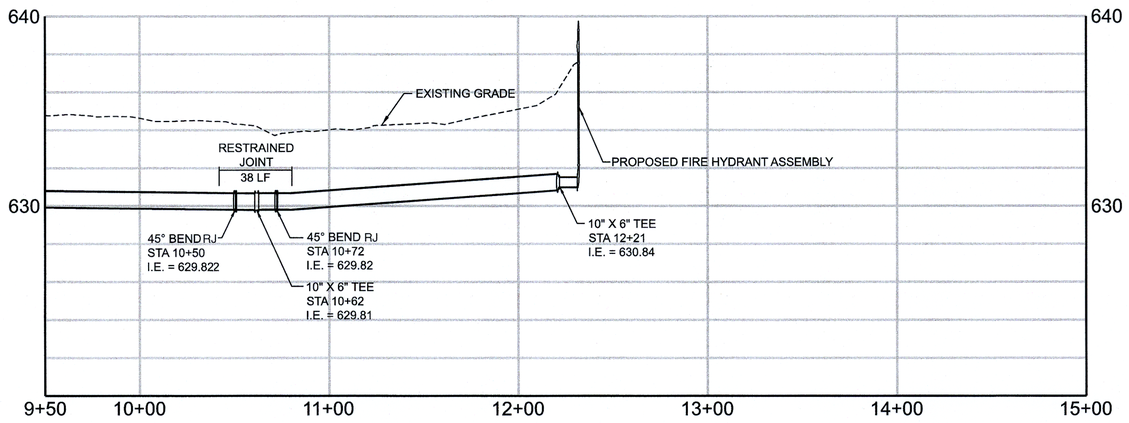

PROFILE
1"=40' HORIZONTAL
1"=4' VERTICAL

VERIFY SCALE
BAR IS ONE INCH ON ORIGINAL DRAWING.
0 1"

REVISION	BY	DATE

LICENSED PROFESSIONAL ENGINEER
SAMUEL P. CHANDLER
35637
OKLAHOMA
05/11/2026

YARD PIPING
PLAN VIEWS 3 OF 3

PROJECT NO. TMUA-W 24-05

A.B. JEWELL WTP RESIDUALS IMPROVEMENTS PHASE 2

CITY OF TULSA, OKLAHOMA
WATER AND SEWER DEPARTMENT

PLANS AND ESTIMATES PREPARED BY: Jacobs

PLAN SCALE: 1"=20'-0"	DRAWN	KS	05/2026	APPROVED:
	DESIGNED	EI	05/2026	
PROFILE SCALE:	SURVEY			
HORIZONTAL: 1"=40'-0"	PROJ. MGR.	NHW	6/26	
VERTICAL 1"=4'-0"	LEAD ENGR.	CEW	6/26	DESIGN MANAGER
	FIELD MGR.		7/26	
FILE:	DRAWING: Y-3			DATE: MAY 2026
ATLAS PAGE NO: 543				SHEET 25 OF 47 SHEETS

ISSUED FOR BID

PATH,NAME: 050-Y-2003_D3910200.DGN PLOT DATE: 05\08\2026 PLOT TIME: 1:50:50 PM

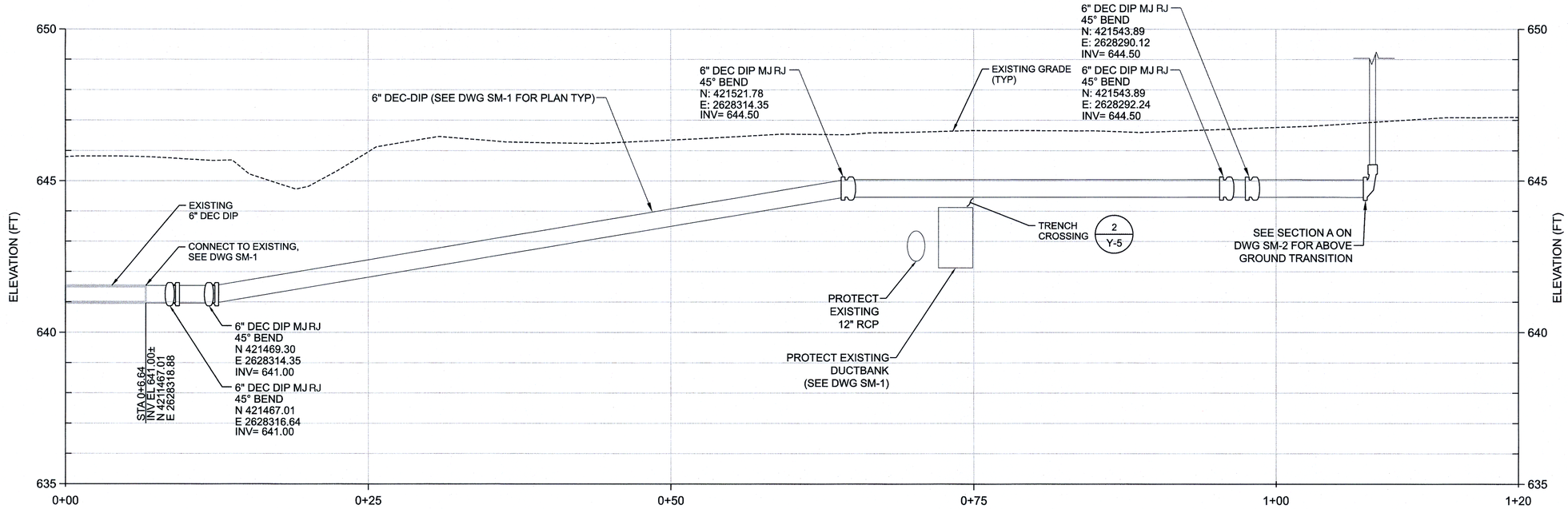

PROFILE

1" = 5' HORIZONTAL
1" = 2' VERTICAL

PATHNAME: 050-Y-2004_D39102OO.dgn PLOT DATE: 05/08/2026 PLOT TIME: 11:20:25 AM

VERIFY SCALE

BAR IS ONE INCH ON ORIGINAL DRAWING.
0 1"

REVISION	BY	DATE

LICENSED PROFESSIONAL ENGINEER
SAMUEL P. CHANDLER
35637
OKLAHOMA
05/11/2026

YARD PIPING
RESIDUALS BLEND TANK PROFILE

PROJECT NO. TMUA-W 24-05

A.B. JEWELL WTP RESIDUALS
IMPROVEMENTS PHASE 2

CITY OF TULSA, OKLAHOMA
WATER AND SEWER DEPARTMENT

PLANS AND ESTIMATES PREPARED BY:
Jacobs

PLAN SCALE:	DRAWN	KS	05/2026	APPROVED:
AS NOTED	DESIGNED	GG	05/2026	
PROFILE SCALE:	SURVEY			
HORIZONTAL: 1"=5'-0"	PROJ. MGR.	KHM	6/2/26	
	LEAD ENGR.	CEW	6/2/26	
VERTICAL 1"=2'-0"	FIELD MGR.		7/26	DESIGN MANAGER
FILE:	DRAWING: Y-4			DATE: MAY 2026
ATLAS PAGE NO: 543				SHEET 26 OF 47 SHEETS

ISSUED FOR BID

BEARING AREA OF THRUST BLOCKS IN SQ. FT. (HORIZONTAL BENDS)		
FITTING SIZE	TEE PLUGGED RUN	
	A_1	A_2
4	1.9	1.4
6	4.3	3.0
8	7.6	5.4
10	11.8	8.4
12	17.0	12.0
14	23.0	16.3
16	30.0	21.3
18	38.0	27.0
20	47.0	33.3
24	68.0	48.0

FITTING SIZE	ROD SIZE	EMBEDMENT
12" AND LESS	#6	30"
14"-16"	#8	36"



PLUGGED TEE

GALVANIZED RODS OVER FITTING AND EMBEDDED IN CONCRETE (SEE TABLE FOR SIZES)

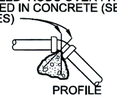
PROFILE

* EACH AREA (A/2) IS 1/2 OF TABULATED TOTAL AREA

1 THRUST BLOCK NOTES AND DETAILS

NTS

Y-3

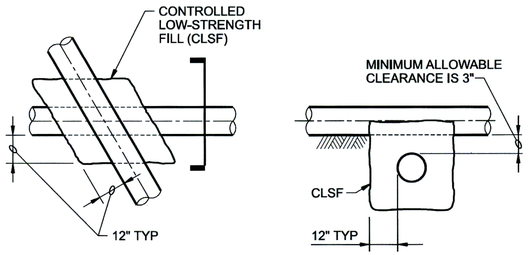

PLAN

SECTION

NOTES:

CLSF SUPPORT IS REQUIRED:

1. WHEN BOTH PIPELINES ARE NEW AND CLEARANCE BETWEEN THEM IS LESS THAN 12".
2. WHEN A NEW PIPELINE IS CROSSING OVER AN EXISTING PIPELINE AND THE CLEARANCE BETWEEN THEM IS LESS THAN 12".
3. AT ALL PIPE CROSSINGS WHERE A NEW PIPELINE IS CROSSING UNDER AN EXISTING PIPELINE.

2 TRENCH CROSSING

NTS

Y-4

PATHNAME: 050-Y-5001_D3910200.dgn PLOT DATE: 05\06\2026 PLOT TIME: 10:42:30 AM

LICENSED PROFESSIONAL ENGINEER SAMUEL P. CHANDLER 35637 OKLAHOMA

05/11/2026

VERIFY SCALE

BAR IS ONE INCH ON ORIGINAL DRAWING.

0 1"

REVISION	BY	DATE

YARD PIPING DETAILS

PROJECT NO. TMUA-W 24-05

A.B. JEWELL WTP RESIDUALS IMPROVEMENTS PHASE 2

CITY OF TULSA, OKLAHOMA
WATER AND SEWER DEPARTMENT

PLANS AND ESTIMATES PREPARED BY: Jacobs

PLAN SCALE:	DRAWN	KS	05/2026	APPROVED:
AS NOTED	DESIGNED	EI	05/2026	
PROFILE SCALE:	SURVEY			
HORIZONTAL: N/A	PROJ. MGR.	NAN	6/26	
	LEAD ENGR.	CEW	6/26	
VERTICAL N/A	FIELD MGR.	[illegible]	7/26	DESIGN MANAGER
FILE:	DRAWING: Y-5			DATE: MAY 2026
ATLAS PAGE NO: 543				SHEET 27 OF 47 SHEETS

ISSUED FOR BID

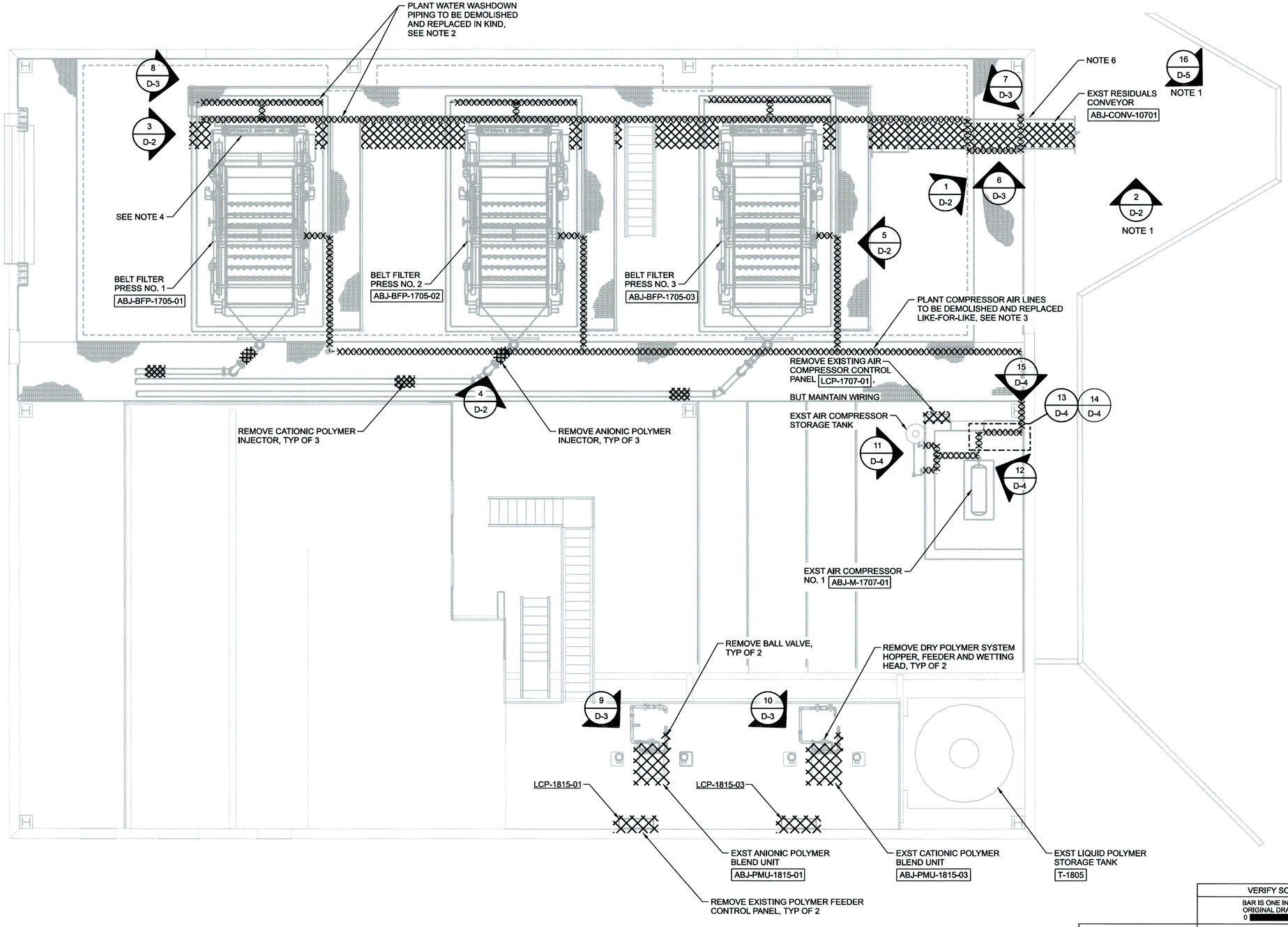

N

DEWATERING BUILDING DEMOLITION PLAN

3/16"=1'-0"

GENERAL NOTES

1. DEMOLITION VIEW IS LOCATED OUTSIDE THE DEWATERING BUILDING, TYPICAL 2 VIEWS.
2. LOCATION OF EXISTING PLANT WATER WASHDOWN PIPING IS SHOWN TO BE APPROXIMATE.
3. LOCATION OF COMPRESSOR AIR LINES IS SHOWN TO BE APPROXIMATE. DEMOLITION OF AIR LINES IS FROM THE AIR COMPRESSOR STORAGE TANK OUTLET TO THE BFP AS SHOWN ON DETAIL 5 ON DWG D-2.
4. CONVEYOR IS TO BE DEMOLISHED AND REPLACED.
5. ACCESS GRATING TO BE PROTECTED AND TO REMAIN INTACT.
6. EXISTING WALL OPENING TO BE REUSED FOR NEW CONVEYOR. SEE STRUCTURAL DRAWINGS.
7. DEMOLISH ALL CONDUCTORS AND EXPOSED CONDUIT ASSOCIATED WITH EQUIPMENT (POLYMER FEEDERS AND CONVEYOR) TO BE DEMOLISHED.

VERIFY SCALE

BAR IS ONE INCH ON ORIGINAL DRAWING.
0 1"

REVISION	BY	DATE

OKLAHOMA PROFESSIONAL ENGINEER
B. LUKE LENARD 28364
05/11/2026

DEMOLITION
DEWATERING BUILDING FLOOR PLAN

PROJECT NO. TMUA-W 24-05

A.B. JEWELL WTP RESIDUALS IMPROVEMENTS PHASE 2

CITY OF TULSA, OKLAHOMA
WATER AND SEWER DEPARTMENT

PLANS AND ESTIMATES PREPARED BY:
Jacobs

PLAN SCALE: 3/16"=1'-0"	DRAWN	SM	05/2026
	DESIGNED	BS	05/2026
PROFILE SCALE:	SURVEY		
HORIZONTAL: N/A	PROJ. MGR.		
	LEAD ENGR.		
VERTICAL N/A	FIELD MGR.		
FILE:	DRAWING: D-1		
ATLAS PAGE NO: 543			

APPROVED:
DESIGN MANAGER
DATE: MAY 2026
SHEET 28 OF 47 SHEETS

ISSUED FOR BID

PATHNAME: 040-D-1001_D3910200.dgn PLOT DATE: 05\06\2026 PLOT TIME: 10:54:05 AM

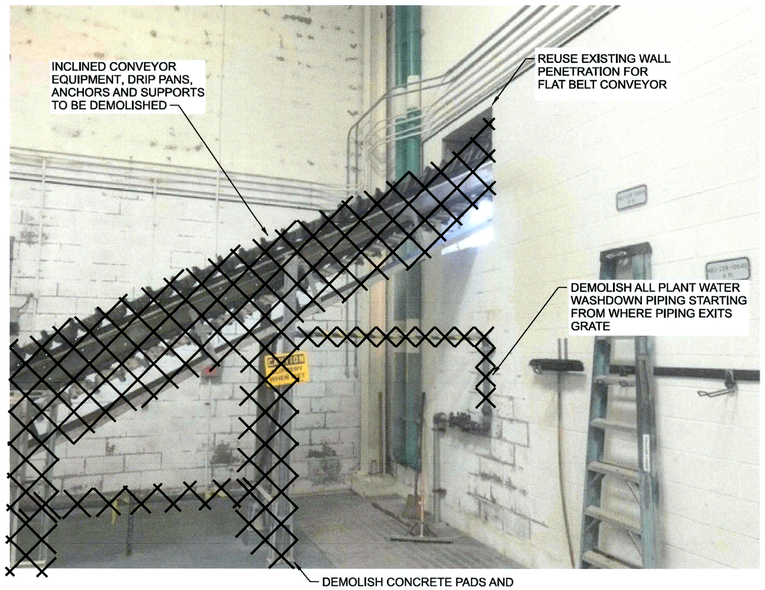

1 BELT CONVEYOR - INTERIOR INCLINED
NTS
D-1

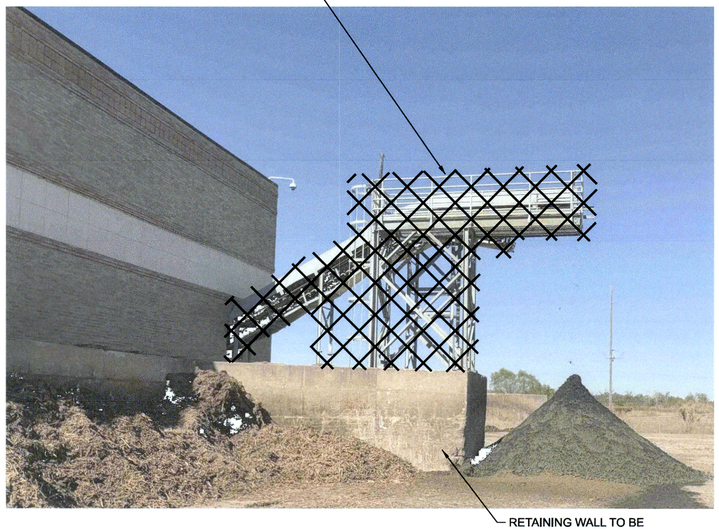

2 RETENTION WALL AND BELT CONVEYOR EXTERIOR
NTS
D-1



3 BELT CONVEYOR - HORIZONTAL
NTS
D-1

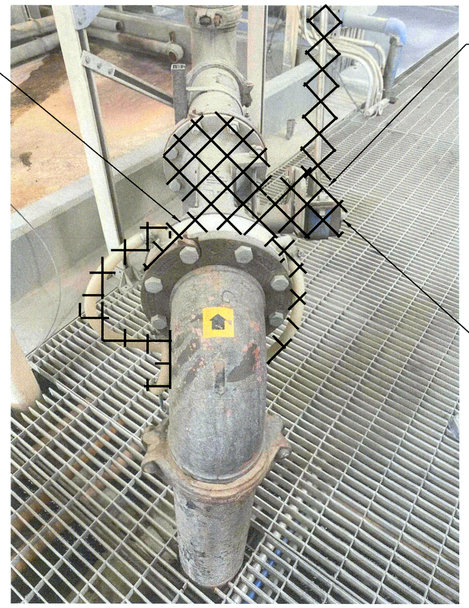

4 POLYMER INJECTOR
NTS
D-1



5 COMPRESSOR AIR LINE TIE-IN POINT
NTS
D-1

VERIFY SCALE
BAR IS ONE INCH ON ORIGINAL DRAWING.
0 1"

REVISION	BY	DATE

OKLAHOMA PROFESSIONAL ENGINEER
B. LUKE LENARD 28364
05/11/2026

DEMOLITION
VIEWS 1 OF 4

PROJECT NO. TMUA-W 24-05

A.B. JEWELL WTP RESIDUALS IMPROVEMENTS PHASE 2

CITY OF TULSA, OKLAHOMA
WATER AND SEWER DEPARTMENT

PLANS AND ESTIMATES PREPARED BY:
Jacobs

PLAN SCALE: AS NOTED	DRAWN	SM	05/2026	APPROVED:
PROFILE SCALE:	DESIGNED	BS	05/2026	
HORIZONTAL: N/A	SURVEY			
VERTICAL N/A	PROJ. MGR.			
	LEAD ENGR.			
	FIELD MGR.			DESIGN MANAGER
FILE:	DRAWING: D-2			DATE: MAY 2026
ATLAS PAGE NO: 543				SHEET 29 OF 47 SHEETS

ISSUED FOR BID

PATHNAME: 040-D-1002_D3910200.dgn PLOT DATE: 05/06/2026 PLOT TIME: 10:57:05 AM

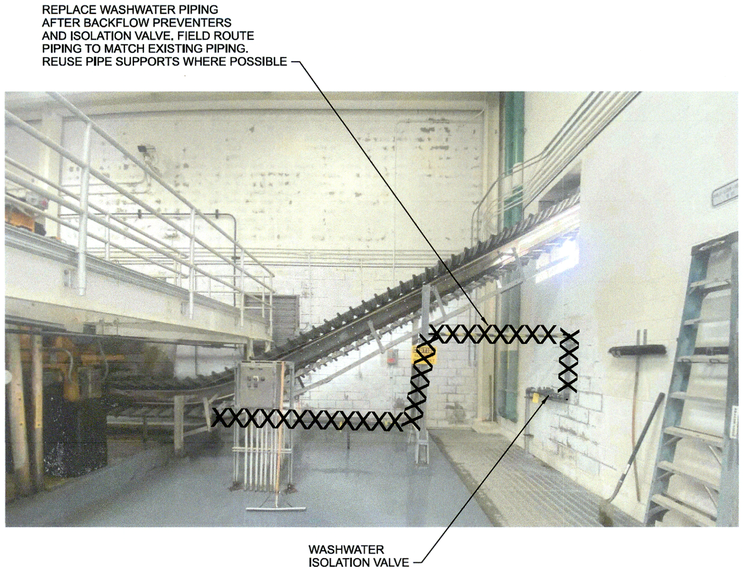

6 WASHWATER PIPING DEMOLITION START
NTS
D-1

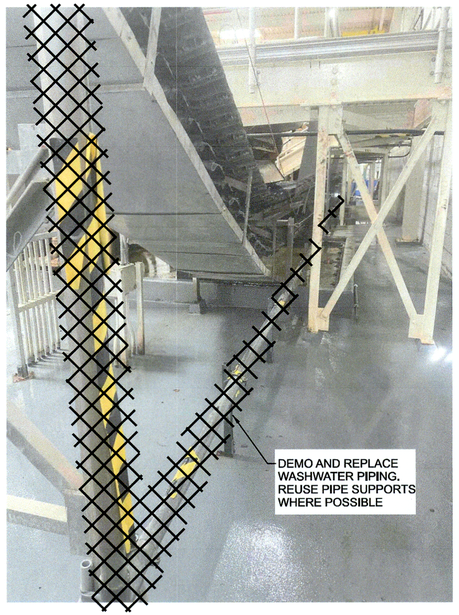

7 WASHWATER PIPING DEMOLITION
NTS
D-1

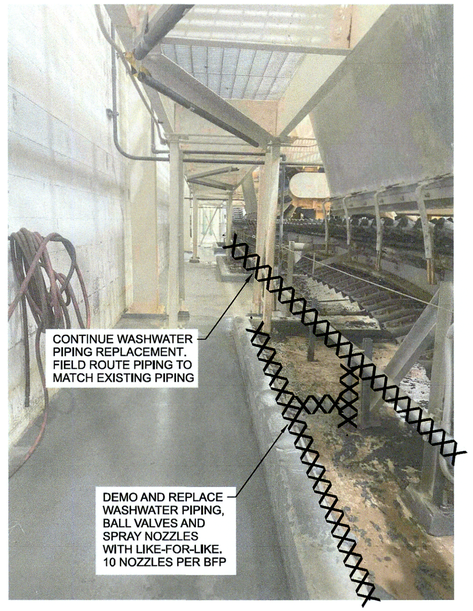

8 WASHWATER PIPING DEMOLITION
NTS
D-1

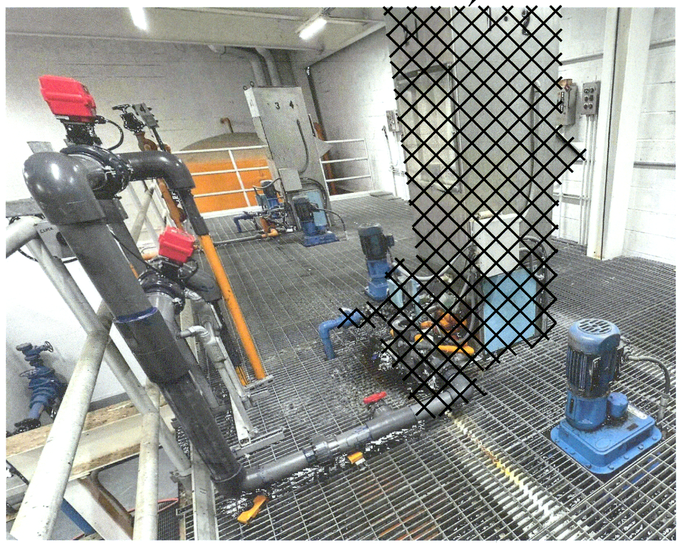

9 ANIONIC POLYMER HOPPER SKID
NTS
D-1

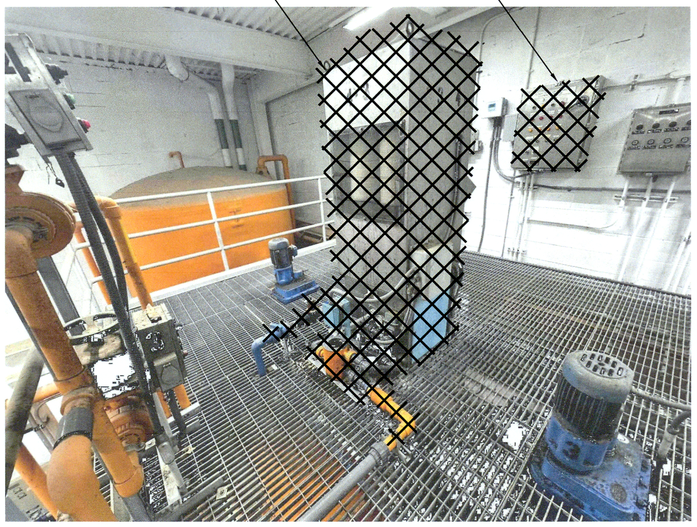

10 CATIONIC POLYMER HOPPER SKID
NTS
D-1

DEMOLITION
VIEWS 2 OF 4

PROJECT NO. TMUA-W 24-05

A.B. JEWELL WTP RESIDUALS IMPROVEMENTS PHASE 2

CITY OF TULSA, OKLAHOMA
WATER AND SEWER DEPARTMENT

PLANS AND ESTIMATES PREPARED BY:
Jacobs

VERIFY SCALE
BAR IS ONE INCH ON ORIGINAL DRAWING.
0 1"

REVISION	BY	DATE

PROFESSIONAL ENGINEER
B. LUKE LENARD
28364
LICENSED
OKLAHOMA
05/11/2026

PLAN SCALE: AS NOTED	DRAWN	SM	05/2026	APPROVED:
	DESIGNED	JW	05/2026	
PROFILE SCALE:	SURVEY			
HORIZONTAL: N/A	PROJ. MGR.	KMN	5/26	
	LEAD ENGR.	BLL	5/26	
VERTICAL N/A	FIELD MGR.		7/26	DESIGN MANAGER
FILE:	DRAWING: D-3			DATE: MAY 2026
ATLAS PAGE NO: 543				SHEET 30 OF 47 SHEETS

ISSUED FOR BID

PATHNAME: 040-D-1003_D3910200.dgn PLOT DATE: 05/06/2026 PLOT TIME: 10:59:07 AM

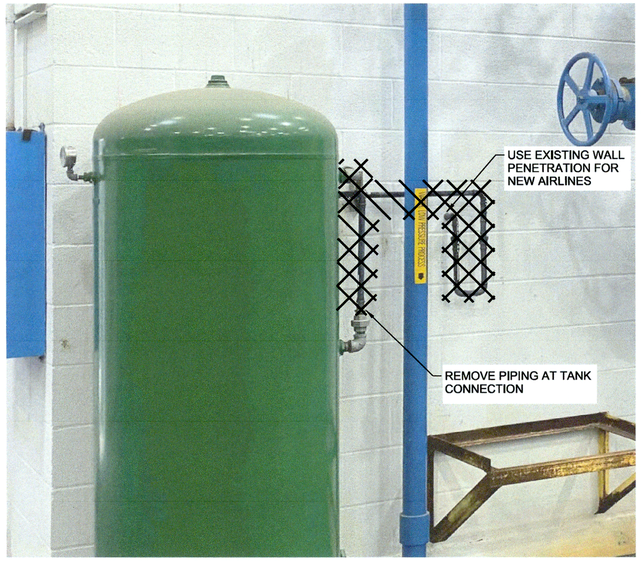

11 TANK CONNECTION PIPING DEMOLITION
NTS
D-1

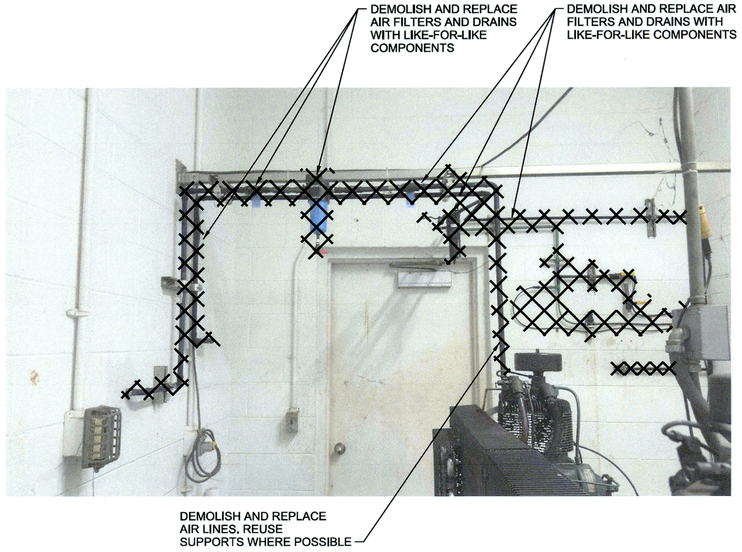

12 COMPRESSOR AIRLINE DEMOLITION START
NTS
D-1

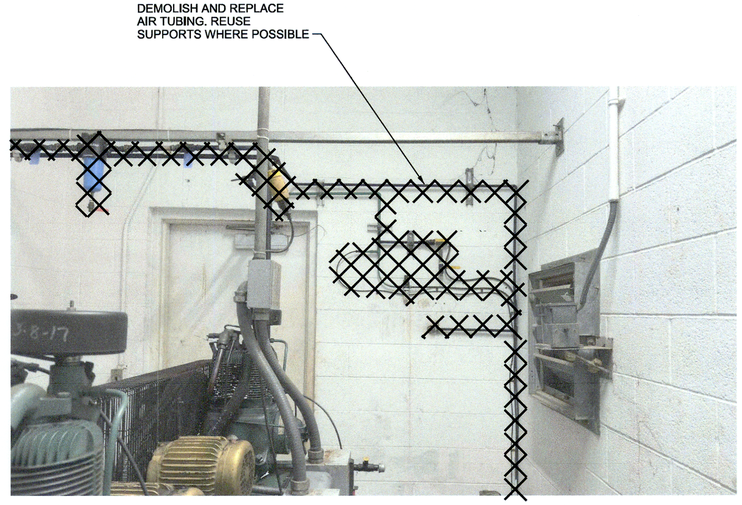

13 COMPRESSOR AIRLINE DEMOLITION
NTS
D-1



14 COMPRESSOR AIRLINE DEMOLITION
NTS
D-1

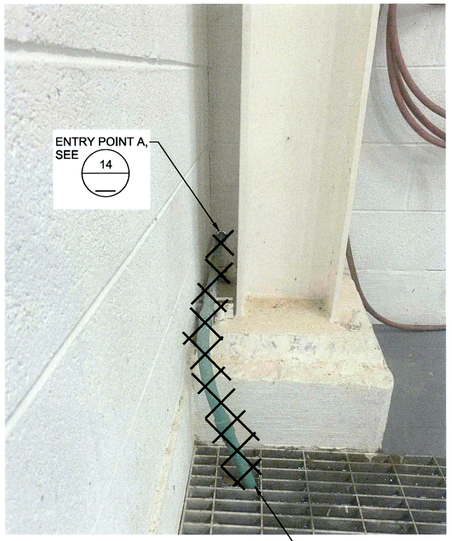

15 COMPRESSOR AIRLINE DEMOLITION
NTS
D-1

DEMOLITION
VIEWS 3 OF 4

PROJECT NO. TMUA-W 24-05

A.B. JEWELL WTP RESIDUALS IMPROVEMENTS PHASE 2

CITY OF TULSA, OKLAHOMA
WATER AND SEWER DEPARTMENT

PLANS AND ESTIMATES PREPARED BY:
Jacobs

VERIFY SCALE
BAR IS ONE INCH ON ORIGINAL DRAWING.
0 1"

REVISION	BY	DATE

PROFESSIONAL ENGINEER
B. LOKE LENARD
28364
OKLAHOMA
05/11/2026

PLAN SCALE: AS NOTED	DRAWN	SM	05/2026	APPROVED:
	DESIGNED	BS	05/2026	
PROFILE SCALE:	SURVEY			
HORIZONTAL: N/A	PROJ. MGR.		6/1/26	
	LEAD ENGR.		6/1/26	
VERTICAL N/A	FIELD MGR.		6/1/26	DESIGN MANAGER
FILE:	DRAWING: D-4			DATE: MAY 2026
ATLAS PAGE NO: 543				SHEET 31 OF 47 SHEETS

ISSUED FOR BID

PATHNAME: 040-D-1004_D3910200.dgn PLOT DATE: 05\06\2026 PLOT TIME: 11:01:07 AM

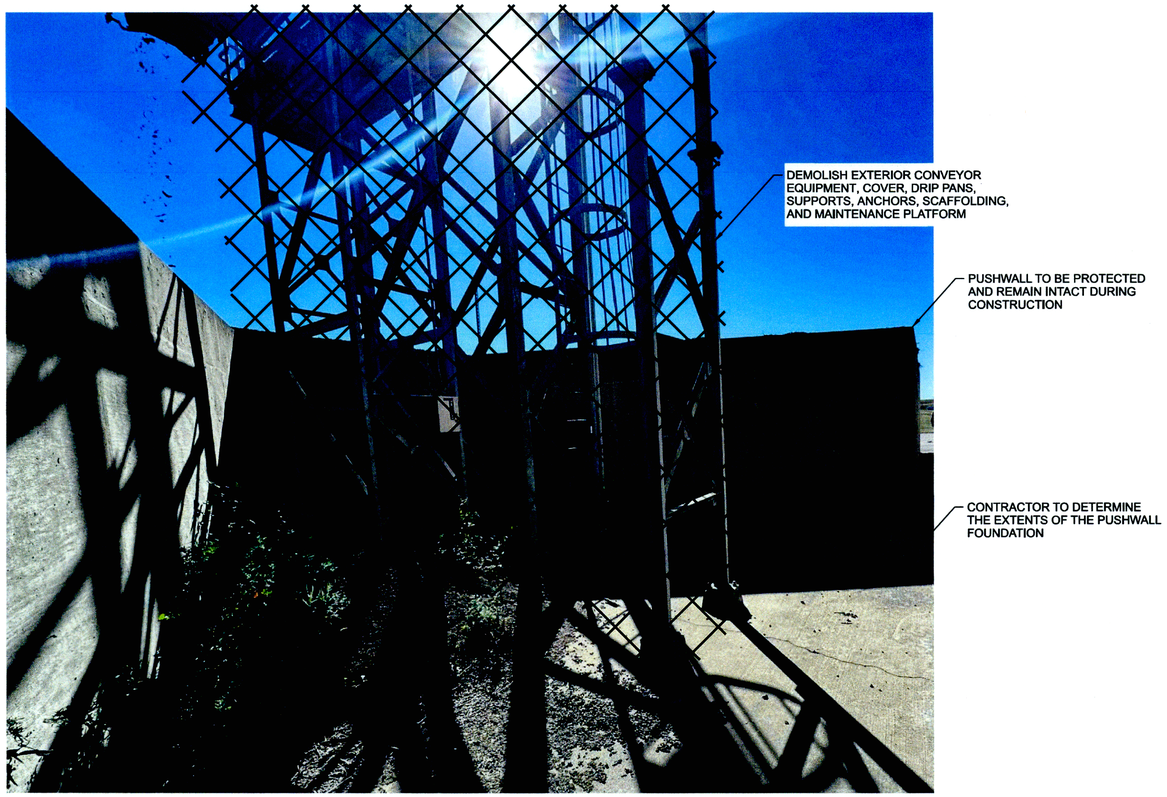

16 CONVEYOR SCAFFOLDING DEMOLITION
NTS
D-1

PATHNAME: 040-D-1005_D3910200.dgn PLOT DATE: 05\06\2026 PLOT TIME: 11:03:29 AM

DEMOLITION
VIEWS 4 OF 4

PROJECT NO. TMUA-W 24-05

A.B. JEWELL WTP RESIDUALS
IMPROVEMENTS PHASE 2

CITY OF TULSA, OKLAHOMA
WATER AND SEWER DEPARTMENT

VERIFY SCALE
BAR IS ONE INCH ON ORIGINAL DRAWING.
0 1"

PLANS AND ESTIMATES PREPARED BY:
Jacobs

REVISION	BY	DATE

LICENSED PROFESSIONAL ENGINEER
B. LUKE LENARD
28364
OKLAHOMA
05/11/2026

PLAN SCALE:	DRAWN	SM	05/2026	APPROVED:
AS NOTED	DESIGNED	BS	05/2026	
PROFILE SCALE:	SURVEY			
HORIZONTAL: N/A	PROJ. MGR.	NHN	6/26	
	LEAD ENGR.	CEW	6/26	
VERTICAL N/A	FIELD MGR.	[illegible]	7/26	DESIGN MANAGER
FILE:	DRAWING: D-5			DATE: MAY 2026
ATLAS PAGE NO: 543				SHEET 32 OF 47 SHEETS

ISSUED FOR BID

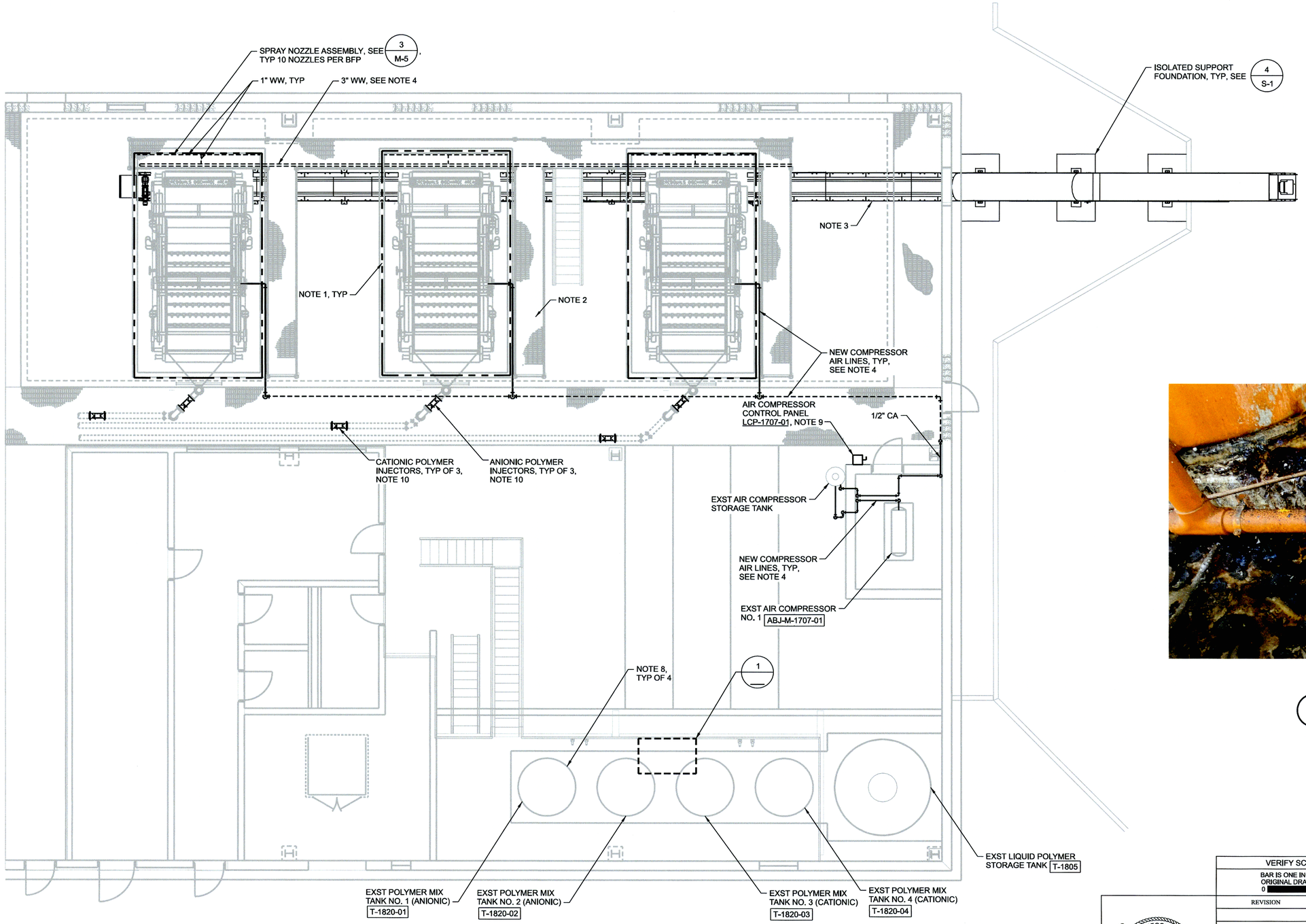

DEWATERING BUILDING PLAN AT EL 645.50

3/16"=1'-0"

GENERAL NOTES

1. REFER TO BELT FILTER PRESS SPECIFICATION 44 46 16S, BELT FILTER PRESS DEWATERING EQUIPMENT FOR COMPONENTS TO BE REPLACED. ORIGINAL EQUIPMENT MANUFACTURER (OR EQUAL) SHALL SUPPLY REPLACEMENT COMPONENTS AND EXECUTE INSTALLATION. CONTRACTOR TO COORDINATE INSTALLATION WITH OTHER PROJECT SCOPE REQUIREMENTS
2. ACCESS PLATFORMS ARE TO REMAIN INTACT DURING REFURBISHMENT AND CONSTRUCTION.
3. CONVEYOR NOT SHOWN FOR CLARITY. SEE DWG M-2 FOR THE PROPOSED CONVEYOR PLAN VIEW.
4. LOCATION OF NEW PLANT WATER WASHDOWN PIPING AND COMPRESSOR AIR LINES ARE APPROXIMATE. CONTRACTOR TO FIELD ROUTE AND VERIFY WITH NEW EQUIPMENT LOCATIONS AND SUPPORTS. SEE DEMO DRAWINGS FOR EXISTING CONDITIONS.
5. ONLY EXISTING EQUIPMENT RELATING TO THE PROJECT SCOPE IS SHOWN.
6. CONTRACTOR TO REPAIR AND RECONNECT DAMAGED OVERFLOW POLYMER PIPING, SEE DETAIL 1.
7. CONTRACTOR TO CLEAN POLYMER CONTAINMENT AREA AND REMOVE ALL DRIED POLYMER FROM CONCRETE, TANKS AND PIPING.
8. CONTRACTOR SHALL REPLACE LEVEL SENSORS IN ALL (4) DRY POLYMER TANKS. INSTRUMENT TAG NUMBERS ARE LE/LIT 1820-01, -02, -03 AND -04 RESPECTIVELY.
9. DEMOLISH THE AIR COMPRESSOR CONTROL PANEL AND REPLACE IT WITH A NON-FUSED DISCONNECT SWITCH. MAINTAIN WIRING.
10. POLYMER INJECTOR KOMLINE-SANDERSON CORPORATION CKO50 OR APPROVED EQUAL.



1 DETAIL
NTS

PROCESS MECHANICAL
DEWATERING BUILDING FLOOR PLAN

PROJECT NO. TMUA-W 24-05

A.B. JEWELL WTP RESIDUALS IMPROVEMENTS PHASE 2

CITY OF TULSA, OKLAHOMA
WATER AND SEWER DEPARTMENT

PLANS AND ESTIMATES PREPARED BY: Jacobs

VERIFY SCALE
BAR IS ONE INCH ON ORIGINAL DRAWING.
0 1"

REVISION	BY	DATE

PROFESSIONAL ENGINEER
B. LUKE LENARD
28364
OKLAHOMA
05/11/2026

PLAN SCALE: 3/16"=1'-0"	DRAWN	SM	05/2026	APPROVED:
	DESIGNED	BS	05/2026	
PROFILE SCALE:	SURVEY			
HORIZONTAL: N/A	PROJ. MGR.	KMH	4/26	
	LEAD ENGR.	CEW	4/26	
VERTICAL N/A	FIELD MGR.		4/26	DESIGN MANAGER
FILE:	DRAWING: M-1			DATE: MAY 2026
ATLAS PAGE NO: 543				SHEET 33 OF 47 SHEETS

ISSUED FOR BID

PATHNAME: 040-M-1001_D3910200.dgn PLOT DATE: 05/07/2026 PLOT TIME: 10:30:18 AM

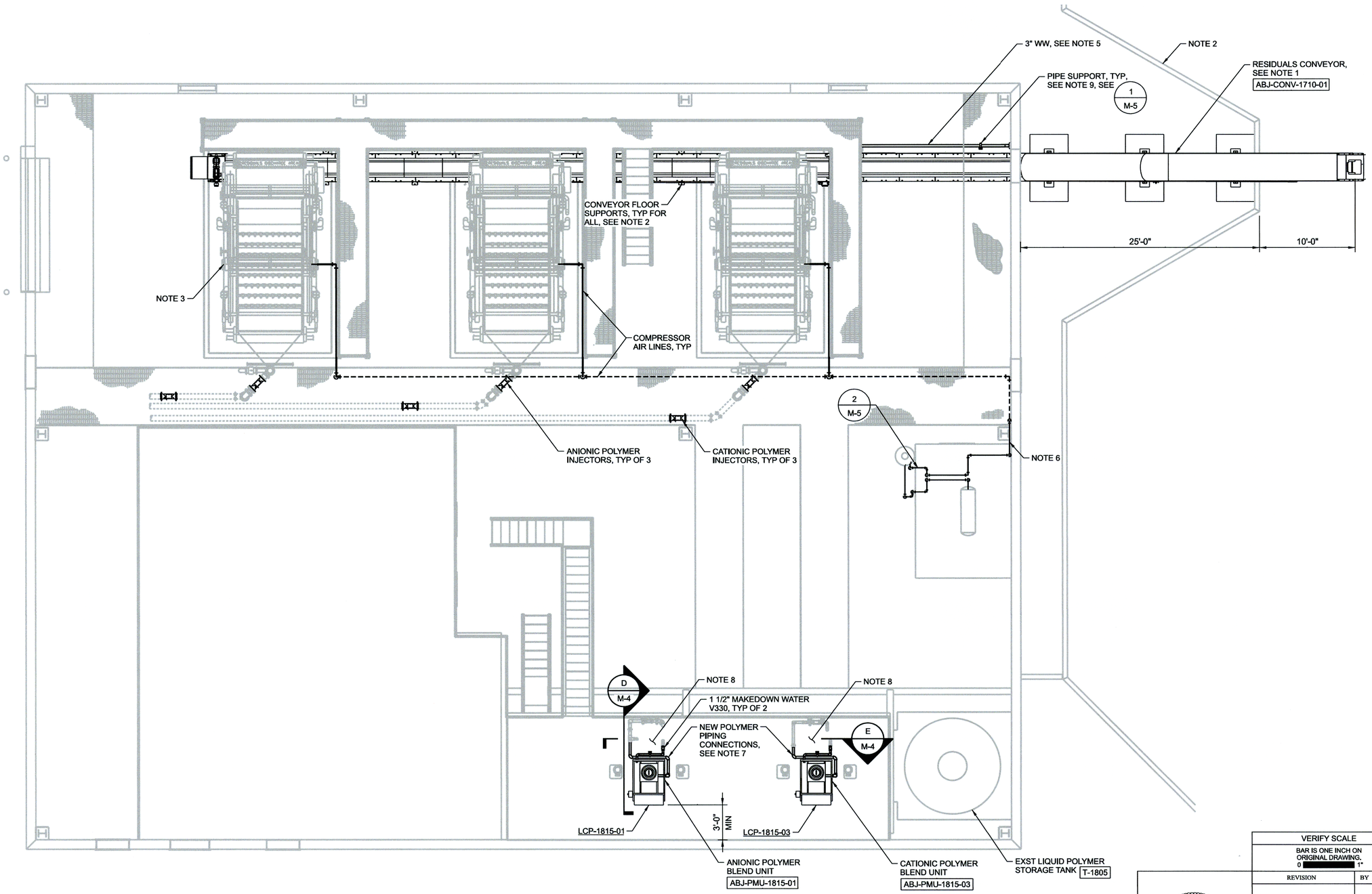

N

DEWATERING BUILDING PLAN

3/16"=1'-0"

GENERAL NOTES

1. CONTRACTOR TO FIELD VERIFY AND COORDINATE WITH MANUFACTURER ON LOCATION OF CONVEYOR. CONVEYOR SUPPORTS AND CONCRETE PADS. SEE SHEET S-1 FOR PAD DETAILS.
2. CONTRACTOR TO FIELD VERIFY LOCATION OF EXISTING PUSH WALL AND LOCATE CONVEYOR SUPPORTS ACCORDINGLY. COORDINATE CONVEYOR INSTALLATION SUCH THAT THE DISCHARGE IS EAST OF EXISTING PUSH WALL.
3. BELT FILTER PRESSES SHOWN TO IMPROVE CLARITY. CONVEYOR TO BE REPLACED UNDER BFP RESIDUALS DROP.
4. DEWATERING EQUIPMENT NOT INCLUDED IN PROJECT SCOPE IS NOT SHOWN ON DRAWINGS.
5. FIELD ROUTE WASHWATER PIPING TO MIMIC EXISTING ROUTING. SEE DEMOLITION DETAILS 16-18 ON DRAWING D-5 FOR EXTENT OF PIPING REPLACEMENT. 3" WW ISOLATION VALVES SHALL BE V331. REPLACE IN KIND ANY EXISTING SOLENOIDS WITHIN 1" OR 3" WW DEMOLITION SCOPE.
6. FIELD ROUTE AIR COMPRESSOR PIPING TO MATCH EXISTING ROUTING. SEE DEMOLITION DETAILS 11-15 ON DRAWING D-4 FOR EXTENT OF PIPING REPLACEMENT AND TANK PIPING CONNECTIONS. 1/2" CA ISOLATION VALVES SHALL BE V300. 1/2" CA SHALL USE WALL AND OVERHEAD PIPE SUPPORTS AS SHOWN IN DETAIL 2 M-5.
7. SEE DEMOLITION DETAILS 9 AND 10 ON DRAWING D-3 FOR LOCATIONS OF NEW POLYMER EQUIPMENT NPW.
8. CLEAN GRATING AND AREA AROUND THE POLYMER FEED SYSTEMS AND ASSOCIATED VALVING. PROTECT BELOW TANKS DURING POLYMER FEED SYSTEM INSTALL TO AVOID ANY ITEMS OR DEBRIS ENTERING TANKS.
9. CONTRACTOR TO FIELD VERIFY PIPE SUPPORT DESIGN.

VERIFY SCALE
BAR IS ONE INCH ON ORIGINAL DRAWING.
0 1"

REVISION	BY	DATE

B. LUKE LENARD 28364 LICENSED PROFESSIONAL ENGINEER OKLAHOMA
05/11/2026

PROCESS MECHANICAL
DEWATERING BUILDING OVERALL PLAN

PROJECT NO. TMUA-W 24-05

A.B. JEWELL WTP RESIDUALS IMPROVEMENTS PHASE 2

CITY OF TULSA, OKLAHOMA
WATER AND SEWER DEPARTMENT

PLANS AND ESTIMATES PREPARED BY: Jacobs

PLAN SCALE: 3/16"=1'-0"	DRAWN	SM	05/2026	APPROVED:
	DESIGNED	BS	05/2026	
PROFILE SCALE:	SURVEY			
HORIZONTAL: N/A	PROJ. MGR.			
	LEAD ENGR.			
VERTICAL N/A	FIELD MGR.			DESIGN MANAGER
FILE:	DRAWING: M-2			DATE: MAY 2026
ATLAS PAGE NO: 543				SHEET 34 OF 47 SHEETS

ISSUED FOR BID

PATHNAME: 040-M-1002_D3910200.dgn PLOT DATE: 05\07\2026 PLOT TIME: 9:30:51 AM

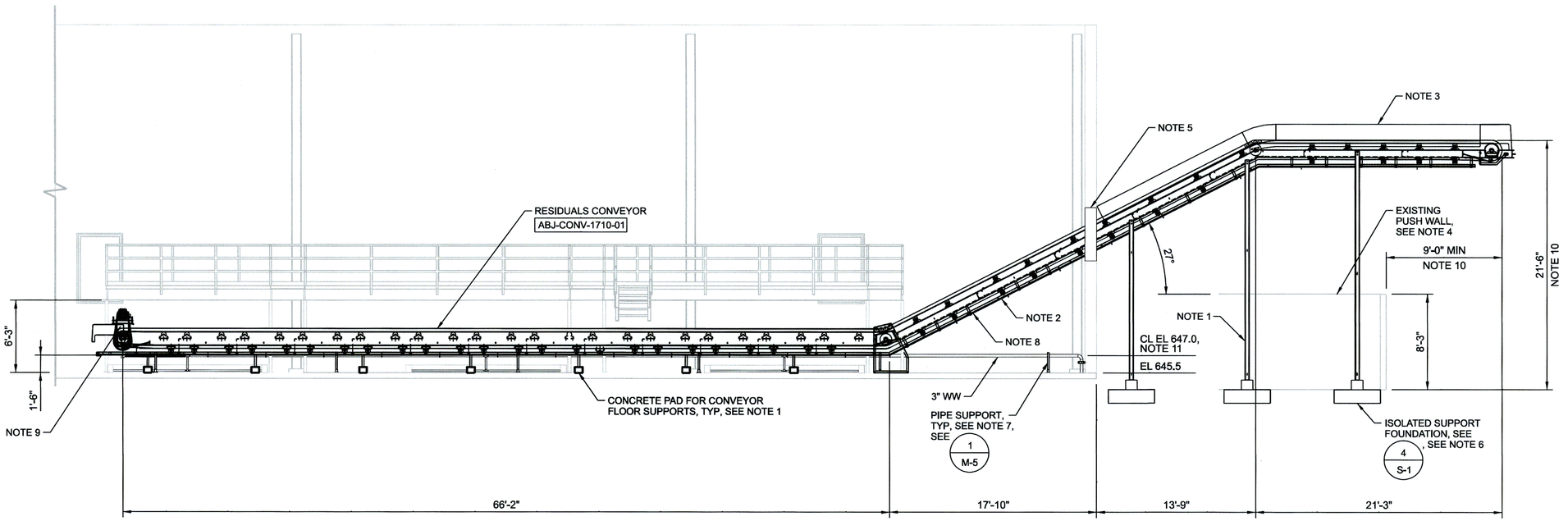

A SECTION
3/16"=1'-0"
M-2

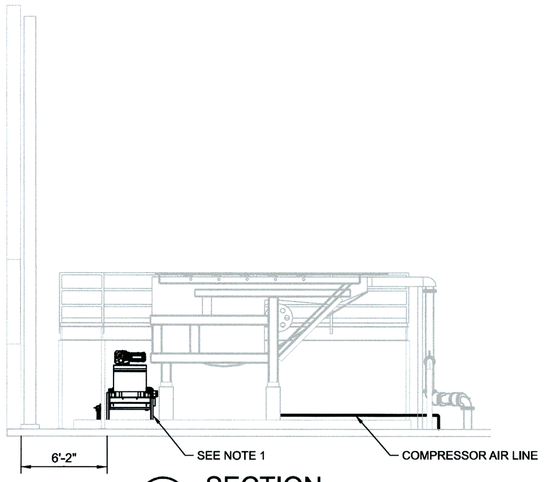

B SECTION
3/16"=1'-0"
M-2

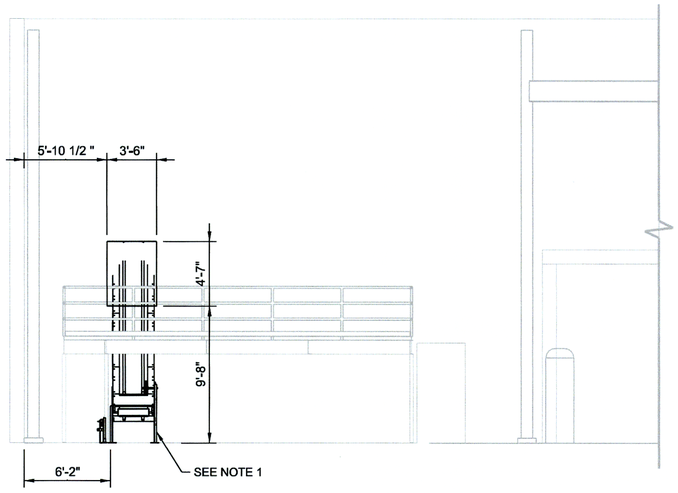

C SECTION
3/16"=1'-0"
M-2

GENERAL NOTES

1. CONTRACTOR TO COORDINATE WITH CONVEYOR MANUFACTURER FOR SPECIFIC LOCATIONS OF SUPPORTS. CONVEYOR SUPPORTS TO BE PROVIDED BY CONVEYOR MANUFACTURER. DEMOLISH ALL EXISTING SUPPORT PADS & MAKE FLUSH WITH FLOOR & MATCH EXISTING FLOOR FINISH. ENSURE CONVEYOR SUPPORT PADS SHALL NOT BE ON THE CONTAINMENT CURB. SEE SHEET S-1 FOR PAD DETAILS
2. CONVEYOR DRIP PANS SHALL BE PROVIDED OUTSIDE OF BELT FILTER PRESS CONTAINMENT AREA (INDOOR AND OUTDOOR). DRIP PANS TERMINATE ONCE IN CONTAINMENT AND WASHWATER DRAINS. CONTRACTOR TO VERIFY DRIP PAN LAYOUT WITH MANUFACTURER AND ON SITE.
3. CONVEYOR HOOD TO BE PROVIDED FOR OUTSIDE PORTION OF CONVEYOR.
4. CONTRACTOR TO FIELD VERIFY HEIGHT OF PUSH WALL AND PROTECT IT DURING CONVEYOR INSTALLATION.
5. REUSE EXISTING PENETRATION. CONTRACTOR TO COORDINATE WITH MANUFACTURER AND FIELD VERIFY THAT WALL OPENING CAN BE REUSED.
6. CONTRACTOR TO FIELD VERIFY EXTENT OF PUSH WALL FOUNDATION. CONFIRM LOCATION OF NEW CONVEYOR SUPPORTS ON EXISTING FOUNDATIONS. PROVIDE NEW ISOLATED CONCRETE FOUNDATION PER DETAIL 4 ON DRAWING S-1.
7. CONTRACTOR TO FIELD VERIFY PIPE SUPPORT DESIGN.
8. PROVIDE PULL CORD STYLE EMERGENCY STOP ALONG THE LENGTH OF THE CONVEYOR. CABLE SHALL RUN ON EITHER SIDE OF THE CONVEYOR. CONTRACTOR TO FIELD INSTALL AND WIRE. VERFIY APPROACH WITH MANUFACTURER.
9. APPROXIMATE LOCATION (DRIVE END) OF CONVEYOR ZERO SPEED SWITCH. CONTRACTOR TO FIELD INSTALL AND WIRE. VERIFY LOCATION WITH MANUFACTURER.
10. CONTRACTOR TO FIELD VERIFY EXISTING CONVEYOR HEIGHT AND DISTANCE FROM PUSH WALL. NEW CONVEYOR TO MATCH EXISTING DIMENSIONS. CONTRACTOR TO COORDINATE FIELD MEASUREMENTS WITH MANUFACTURER.
11. FIELD VERIFY 3" WW CENTERLINE DIMENSIONS TO MATCH EXISTING. 3" WW PIPING EXISTING THE GRATING (IN NORTHEAST CORNER OF THE BUILDING) SHALL BE FIELD ROUTED TO MATCH EXISTING ARRANGEMENT.

PROCESS MECHANICAL
DEWATERING BUILDING SECTIONS

PROJECT NO. TMUA-W 24-05

A.B. JEWELL WTP RESIDUALS
IMPROVEMENTS PHASE 2

CITY OF TULSA, OKLAHOMA
WATER AND SEWER DEPARTMENT

PLANS AND ESTIMATES PREPARED BY:
Jacobs

VERIFY SCALE
BAR IS ONE INCH ON ORIGINAL DRAWING.
0 1"

REVISION	BY	DATE

PLAN SCALE: AS NOTED	DRAWN	SM	05/2026	APPROVED:
	DESIGNED	BS	05/2026	
PROFILE SCALE:	SURVEY			
HORIZONTAL: N/A	PROJ. MGR.			
	LEAD ENGR.		4/26	
VERTICAL N/A	FIELD MGR.		7/26	DESIGN MANAGER
FILE:	DRAWING: M-3			DATE: MAY 2026
ATLAS PAGE NO: 543				SHEET 35 OF 47 SHEETS

LICENSED PROFESSIONAL ENGINEER
B. LUKE LENARD
28364
OKLAHOMA
05/11/2026

ISSUED FOR BID

PATHNAME: 040-M-3001.DGN PLOT DATE: 05062026 PLOT TIME: 11:24:46 AM

GENERAL NOTES

1. CLEAN GRATING AND AREA AROUND THE POLYMER FEED SYSTEMS AND ASSOCIATED VALVING. PROTECT BELOW TANKS DURING POLYMER FEED SYSTEM INSTALL TO AVOID ANY ITEMS OR DEBRIS ENTERING TANKS.
2. THE PROMINENT'S POLYREX METERING SYSTEM IS THE BASIS OF DESIGN FOR THE ANIONIC AND CATIONIC POLYMER BLEND UNITS . CONTRACTOR TO COORDINATE ALL MECHANICAL, STRUCTURAL AND ELECTRICAL DETAILS AND PIPE ROUTING WITH THE PROVIDED POLYMER EQUIPMENT SUPPLIER.

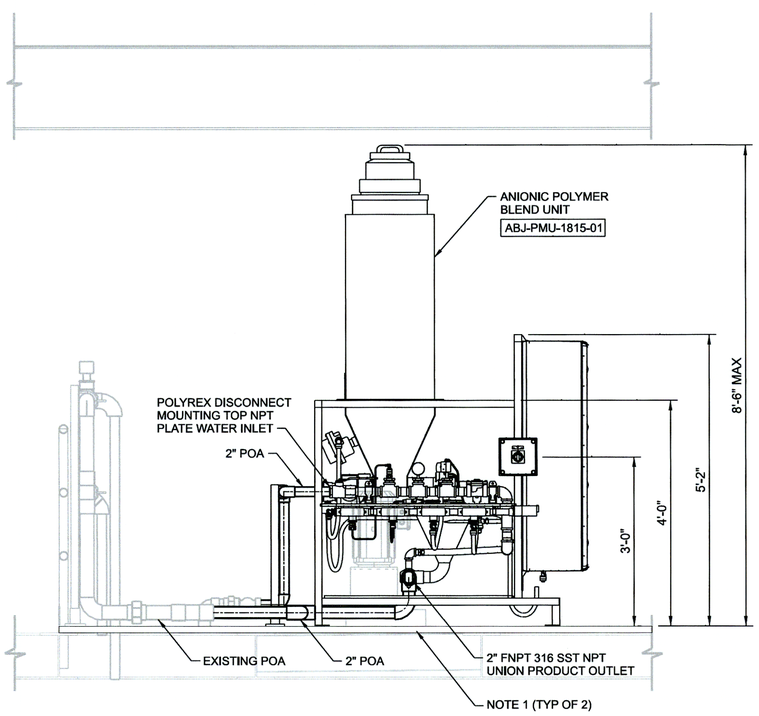

D SECTION
3/4"=1'-0"
M-2

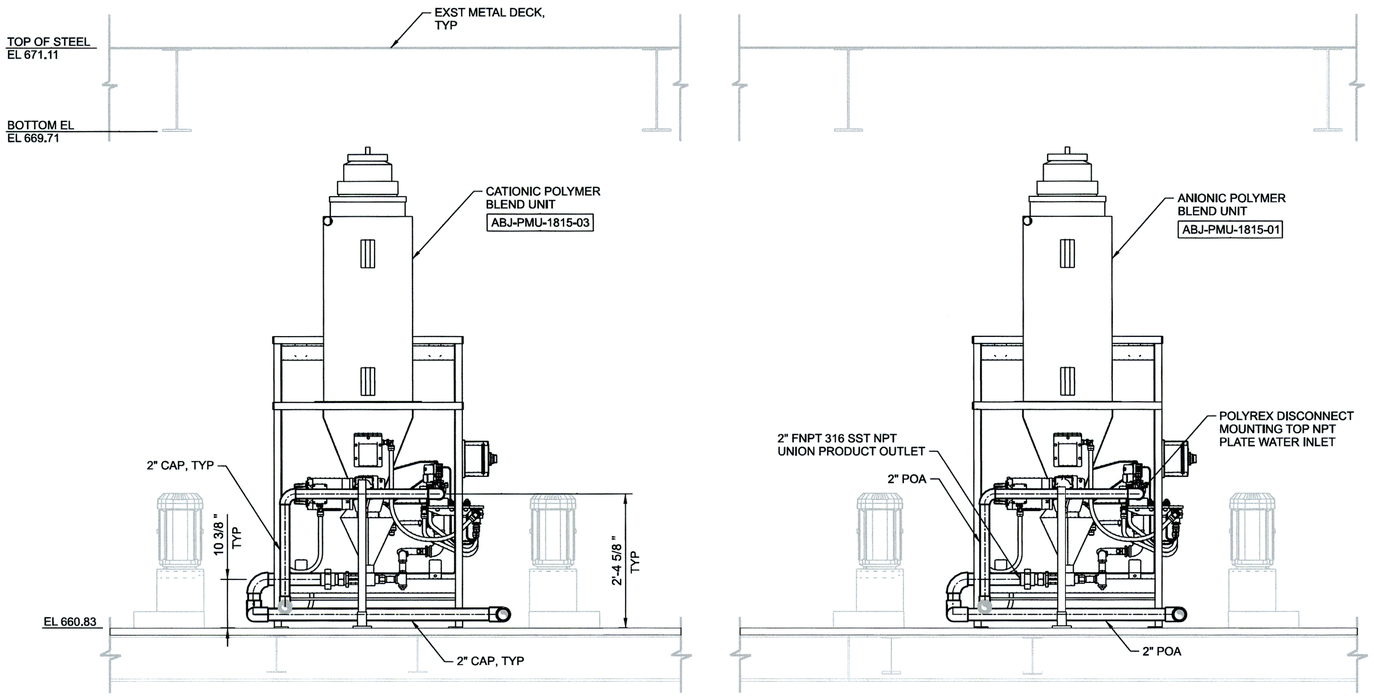

E SECTION
3/4"=1'-0"
M-2

PROCESS MECHANICAL
ANIONIC & CATIONIC POLYMER BLEND UNIT SECTIONS

PROJECT NO. TMUA-W 24-05

A.B. JEWELL WTP RESIDUALS IMPROVEMENTS PHASE 2

CITY OF TULSA, OKLAHOMA
WATER AND SEWER DEPARTMENT

VERIFY SCALE
BAR IS ONE INCH ON ORIGINAL DRAWING.
0 1"

PLANS AND ESTIMATES PREPARED BY: Jacobs

REVISION	BY	DATE

LICENSED PROFESSIONAL ENGINEER
B. LUKE LENARD
28364
OKLAHOMA
05/11/2026

PLAN SCALE:	DRAWN	SM	05/2026	APPROVED:
AS NOTED	DESIGNED	BS	05/2026	
PROFILE SCALE:	SURVEY			
HORIZONTAL: N/A	PROJ. MGR.	[illegible]	6/26	
	LEAD ENGR.	[illegible]	6/26	
VERTICAL N/A	FIELD MGR.	[illegible]	7/26	DESIGN MANAGER
FILE:	DRAWING: M-4			DATE: MAY 2026
ATLAS PAGE NO: 543				SHEET 36 OF 47 SHEETS

ISSUED FOR BID

PATHNAME: 040-D-5001_D3910200.dgn PLOT DATE: 05\06\2026 PLOT TIME: 11:28:31 AM

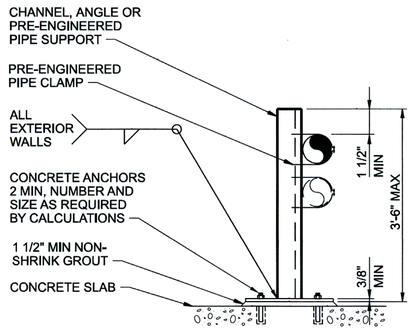

NOTES:

1. SUBMIT FINAL DESIGN DRAWINGS AND CALCULATIONS OF SUPPORTS AND ANCHORAGES AS SPECIFIED.
2. MAXIMUM PIPE SIZE: 2" DIAMETER.
3. MATERIAL TYPE SHALL BE AS SHOWN ON DRAWINGS OR AS SPECIFIED.
4. PROVIDE PIPE PROTECTION BARRIER AS SPECIFIED.

1 FLOOR PIPE SUPPORT
NTS
M-2

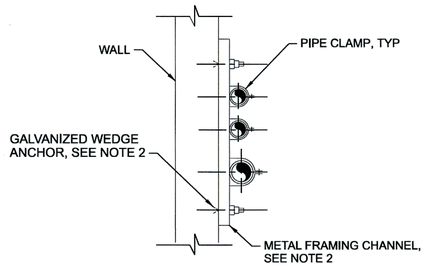

NOTES:

1. NEOPRENE SLEEVE REQUIRED FOR PLASTIC AND COPPER PIPE AT SUPPORT. SEE SPECIFICATIONS.
2. SUBMIT FINAL DESIGNED DRAWINGS AND CALCULATIONS OF SUPPORTS AND ANCHORAGES AS SPECIFIED.
3. CONCRETE ANCHORS 2 MIN. NUMBER AND SIZE AS REQUIRED BY CALCULATIONS.
4. THIS CONFIGURATION MAY BE USED FOR OVERHEAD COMPRESSED AIR PIPE SUPPORTS AS WELL.

2 WALL AND OVERHEAD MOUNTED PIPE SUPPORT
NTS
M-2

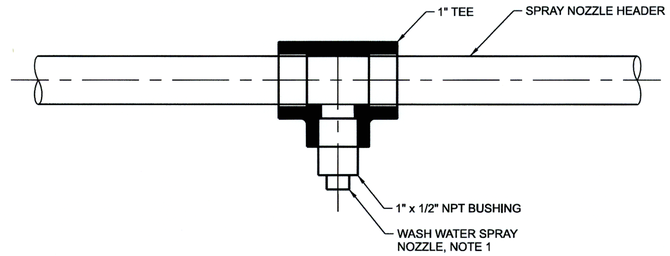

NOTE:

1. PROVIDE WASH WATER SPRAY NOZZLES AS SPECIFIED IN SECTION 40 27 01 PROCESS PIPING SPECIALITIES.

3 SPRAY NOZZLE ASSEMBLY
NTS
M-1

PATHNAME: 040-M-5001_D3910200.dgn PLOT DATE: 05/06/2026 PLOT TIME: 11:30:30 AM

OKLAHOMA LICENSED PROFESSIONAL ENGINEER
B. LUKE LENARD 28364
05/11/2026

VERIFY SCALE
BAR IS ONE INCH ON ORIGINAL DRAWING.
0 [redacted] 1"

REVISION	BY	DATE

PROCESS MECHANICAL DETAILS

PROJECT NO. TMUA-W 24-05

A.B. JEWELL WTP RESIDUALS IMPROVEMENTS PHASE 2

CITY OF TULSA, OKLAHOMA
WATER AND SEWER DEPARTMENT

PLANS AND ESTIMATES PREPARED BY:
Jacobs

PLAN SCALE: AS NOTED	DRAWN	SM	05/2026
	DESIGNED	BS	05/2026
PROFILE SCALE:	SURVEY		
HORIZONTAL: N/A	PROJ. MGR.		
	LEAD ENGR.		
VERTICAL N/A	FIELD MGR.		
FILE:	DRAWING: M-5		
ATLAS PAGE NO: 543			SHEET 37 OF 47 SHEETS

APPROVED:
DESIGN MANAGER
DATE: MAY 2026

ISSUED FOR BID

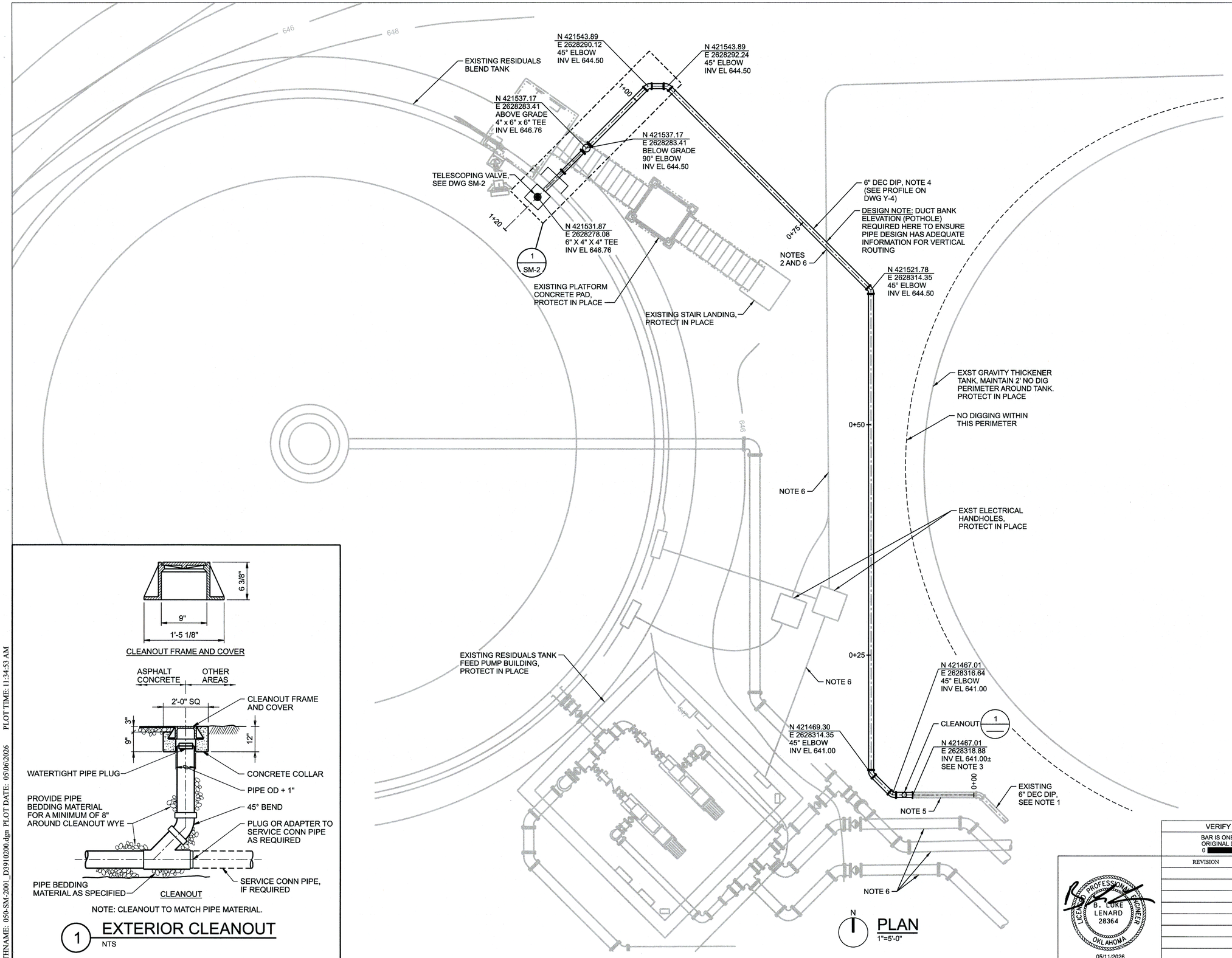

GENERAL NOTES

1. UTILITIES SHOWN ARE BASED ON BEST AVAILABLE INFORMATION AND MAY VARY IN THE FIELD. CONTRACTOR TO FIELD VERIFY LOCATION OF 6" DEC AND INVERT ELEVATION OF TIE IN POINT AND PROVIDE TO ENGINEER PRIOR TO BEGINNING WORK.
2. CONTRACTOR SHALL FIELD VERIFY ALL UTILITY CROSSINGS PRIOR TO BEGINNING WORK. ELECTRICAL DUCTBANKS SHALL BE PROTECTED IN PLACE AND MAINTAINED IN AN OPERATIONAL STATE THROUGHOUT CONSTRUCTION. WHERE ELECTRICAL DUCT BANK IS IN CONFLICT WITH NEW PIPE ROUTING NEW 6" DEC DIP SHALL BE ROUTED ABOVE DUCT BANK WITH A MIN BURY DEPTH OF 20" AND MIN CLEARANCE OF 4".
3. CONTRACTOR TO FIELD LOCATE EXISTING 6" DIP AND MAKE STRAIGHT CONNECTION TO NEW 6" DIP WITH A RESTRAINED MJ CONNECTION.
4. PIPE SHALL MAINTAIN A POSITIVE 1.2% SLOPE AND HAVE A MINIMUM COVER OF 3 FEET UNLESS OTHERWISE NOTED.
5. CONTRACTOR SHALL VERIFY EXST PIPE MATERIAL AND PIPE CONDITION AND NOTIFY ENGINEER IF PIPE MATERIAL VARIES FROM DIP AND SHOWS VISIBLE SIGNS OF CORROSION.
6. MINIMIZE EXPOSURE OF EXISTING UTILITIES DURING TRENCHING. ALL EXISTING UTILITIES THAT ARE EXPOSED DURING TRENCHING AND CONSTRUCTION ACTIVITIES SHALL BE TEMPORARILY SHORED AND SUPPORTED UNTIL TRENCHES ARE BACKFILLED. ENSURE ALL EXPOSED UTILITIES HAVE SUFFICIENTLY COMPACTED BACKFILL PER PROJECT SPECIFICATIONS.
7. RE-VEGETATE AREA DISTURBED BY TRENCHING ACTIVITIES PER CITY OF TULSA NATIVE SEED MIX.
8. CONTRACTOR SHALL TAKE ALL NECESSARY AND PROPER PRECAUTIONS (STORMWATER BEST MANAGEMENT PRACTICES, BMPs)TO PROTECT EXISTING SITE FEATURES FROM DAMAGE THAT MAY OCCUR FROM STORM WATER RUNOFF RESULTING FROM GRADING ACTIVITIES.
9. CONTRACTOR SHALL INSTALL NONDETECTABLE, INERT POLYETHYLENE MARKING TAPE 1' ABOVE 6" DEC DIP. MARKING TAPE SHALL ADHERE TO APWA UNIFORM COLOR CODE, HAVE A THICKNESS OF 5 MILS AND SHALL HAVE MINIMUM 1-INCH HIGH, PERMANENT BLACK LETTERING IMPRINTED CONTINUOUSLY OVER ENTIRE LENGTH.
10. BURIED 6" DEC DIP SHALL BE BEDDED IN CLEAN OR GRAVELLY SAND WITH LESS THAN 5 PERCENT PASSING NO. 200 SIEVE, AS DETERMINED IN ACCORDANCE WITH ASTM D1140, OR GRAVEL OR CRUSHED ROCK WITH A MAXIMUM 3/8-INCH PARTICLE SIZE.
11. TRENCH BACKFILL SHALL BE FREE FROM ROOTS OR ORGANIC MATTER, REFUSE, BOULDERS AND MATERIAL LARGER THAN 1/2 CUBIC FOOT OR OTHER DELETERIOUS MATERIALS.
12. ALL UTILITY CROSSINGS SHALL BE BACKFILLED WITH 5' OF CONTROLLED LOW STRENGTH MATERIAL (CLSM) ON EITHER SIDE OF CROSSING. CLSM MUST REACH A 28-DAY COMPRESSIVE STRENGTH OF 50 TO 150 PSI AND BE IN ACCORDANCE WITH ASTM D4832. SUBMIT CLSM MIX TO ENGINEER PRIOR TO PLACEMENT.
13. CLEANOUT AT 45 DEGREE BEND, SEE DETAIL 1.
14. ACRONYMS ARE FOUND ON DRAWING G-3 AND G-4.

0 5 10 15
1" = 5'-0"

STRUCTURAL/MECHANICAL
RESIDUALS BLEND TANK PLAN

PROJECT NO. TMUA-W 24-05

A.B. JEWELL WTP RESIDUALS
IMPROVEMENTS PHASE 2

CITY OF TULSA, OKLAHOMA
WATER AND SEWER DEPARTMENT

PLANS AND ESTIMATES PREPARED BY:
Jacobs

VERIFY SCALE
BAR IS ONE INCH ON ORIGINAL DRAWING.
0 1"

REVISION	BY	DATE

PLAN SCALE: 1"=5'-0"
PROFILE SCALE: N/A
HORIZONTAL: N/A
VERTICAL N/A

DRAWN	SM	05/2026	APPROVED:
DESIGNED	GG	05/2026	
SURVEY			
PROJ. MGR.	KHM	5/26	
LEAD ENGR.	CEW	5/26	
FIELD MGR.		5/26	DESIGN MANAGER
FILE:	DRAWING: SM-1		DATE: MAY 2026
ATLAS PAGE NO: 543			SHEET 38 OF 47 SHEETS

LICENSED PROFESSIONAL ENGINEER
B. LUKE LENARD 28364
OKLAHOMA
05/11/2026

ISSUED FOR BID

PATHNAME: 050-SM-2001_D3910200.dgn PLOT DATE: 05/06/2026 PLOT TIME: 11:34:53 AM

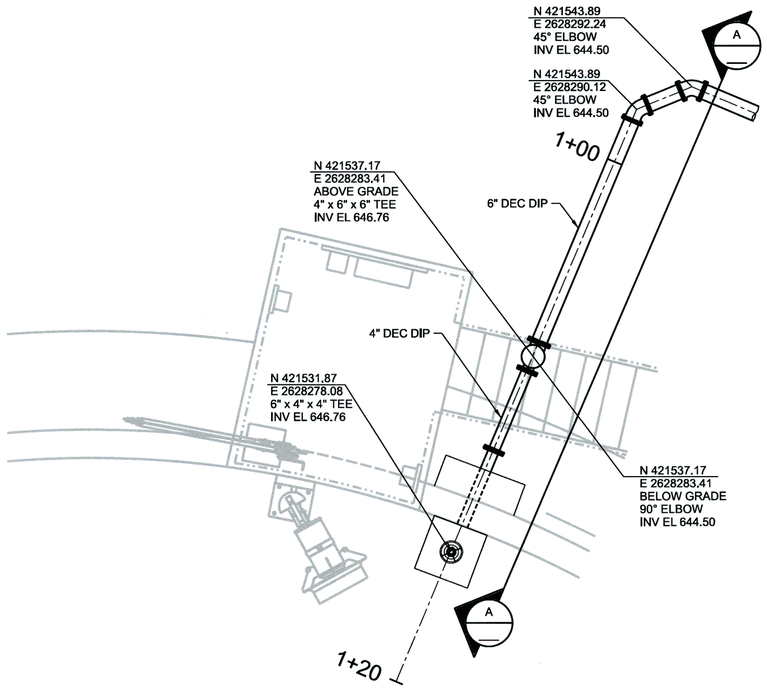

1 ENLARGED PLAN
3/8"=1'-0"
SM-1

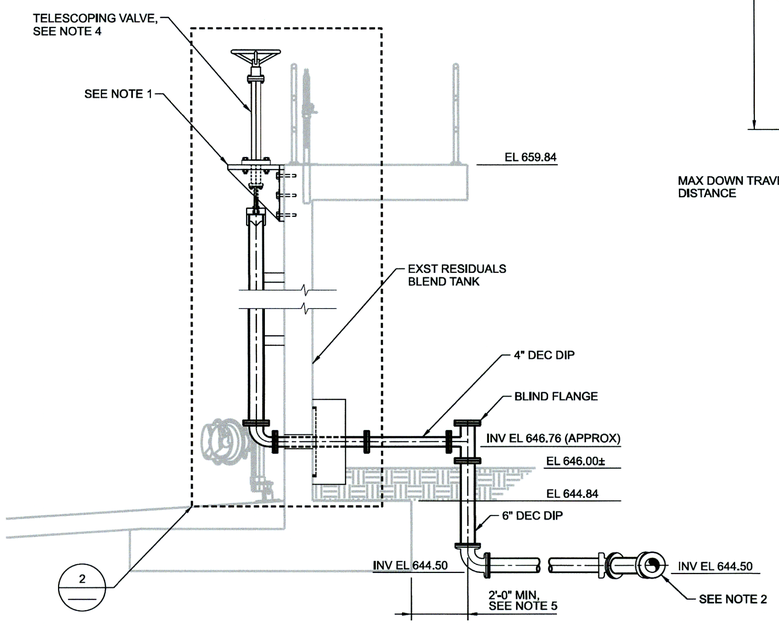

A SECTION
3/8"=1'-0"

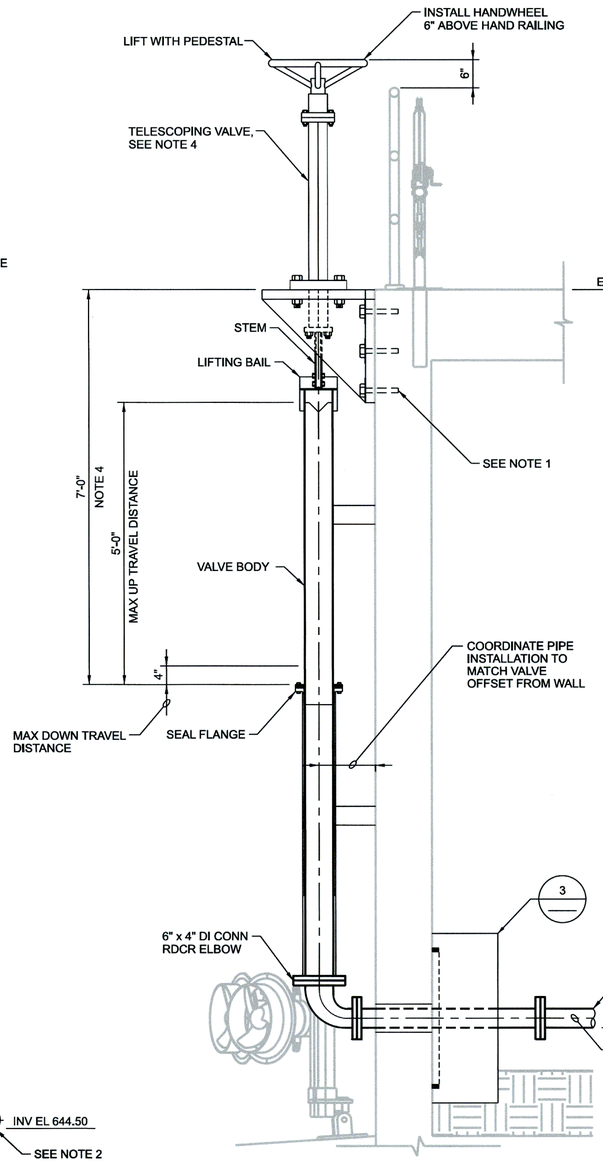

2 DETAIL
3/4"=1'-0"

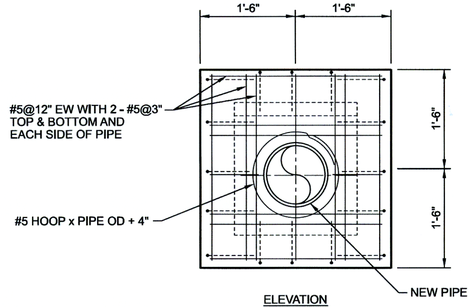

ELEVATION

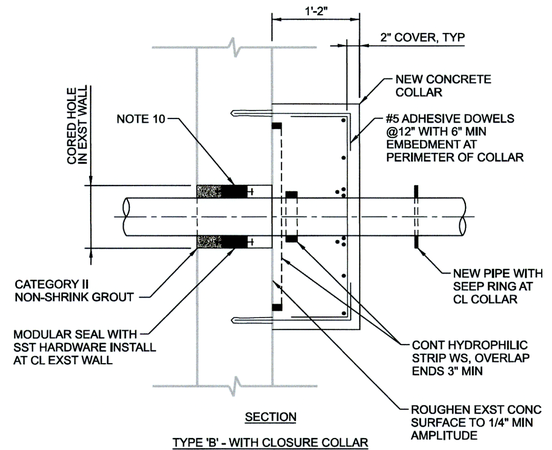

SECTION

TYPE 'B' - WITH CLOSURE COLLAR

GENERAL NOTES

1. MOUNT BRACKET PER MANUFACTURER'S RECOMMENDATION. SUBMIT ANCHORAGE CALCULATIONS FOR ACCEPTANCE.
2. ACTUAL INVERT ELEVATION TO BE DETERMINED BY ENGINEER UPON CONTRACTOR VERIFICATION OF TIE-IN POINT AND UTILITY CROSSING ELEVATIONS.
3. CONTRACTOR SHALL NOT DISTURB OR UNCOVER FOOTING OF RESIDUALS BLEND TANK. CONTRACTOR SHALL USE TEMPORARY SHORING TO ELIMINATE EXPOSURE OF TANK FOOTING.
4. PROVIDE ONE (1) 6" TELESCOPING VALVE V-NOTCH, VALVE BODY ANSI SST TYPE 304, 125# DRILLING PATTERN TO MATCH RISER PIPE, BAIL SAME MATERIAL AS TUBE AND RIGIDLY WELDED, RISING STEM, CAST IRON RETAINING FLANGE, NEOPRENE GASKET, UPRIGHT THREADED STEM OPERATOR SOLID 304 SST, STL HEX BOLT AND NUT, 12" HANDWHEEL, CLEAR PLASTIC BUTYRATE STEM COVER WITH MYLER STRIP POSITION INDICATOR, PEDESTAL, TOP WALL MOUNTING BRACKET, MANUFACTURES STANDARD FOR CLEANING AND SHOP PRIME COATING FOR ALL APPLICABLE COMPONENTS. CONTRACTOR TO PROVIDE RISER PIPE WITH FLANGE AND ATTACHING STUDS/NUTS ACCEPTABLE MANUFACTURERS:
   A) WATERMAN (MCWANE COMPANY)
   B) OR EQUAL
5. CONTRACTOR TO PROTECT EXISTING FOUNDATION.
6. RESTRAINED DUCTILE IRON PIPE AND FITTINGS TO BE LINED AND COATED. TESTED DOMESTICALLY IN THE USA. GRADE 60-42-10 SHALL BE GRAVITY SERVICE BUT RATED FOR 150 PSI. PUSH ON WHERE BURIED AND FLANGED WHERE EXPOSED JOINT RATED AT MINIMUM WORKING PRESSURE EQUAL TO PIPE MATERIAL DESIGN. LINING SHALL BE CEMENT AWWA C104 AND COATING TO BE ASPHALTIC 1 MIL THICK AWWA C151. BOLTS ASTM A307, CARBON STEEL GRADE B HEX BOLTS ASTM A563, RUBBER FLAT FACED FLANGE GASKETS AWWA C111.
7. ACRONYMS ARE FOUND ON DRAWING G-3 AND G-4.

STRUCTURAL NOTES:

1. AT CENTER OF PROPOSED PIPE PENETRATION AND TO 1'-0" BEYOND EDGE OF NEW CONCRETE COLLAR LOCATE EXISTING WALL REINFORCING ON EACH FACE OF WALL WITH GPR SCANNING OR SIMILAR TECHNOLOGY.
2. MARK EXISTING REINFORCING AND CORE HOLE SIZE IN SCANNED AREA.
3. OBTAIN ENGINEER'S INPUT ON WHETHER TO SHIFT THE CENTER OF THE CORE LOCATION TO MINIMIZE THE NUMBER OF EXISTING WALL REINFORCING BARS CUT BY CORE.
4. ONCE CORE LOCATION AND SIZE HAVE BEEN CONFIRMED, INSTALL CORE. ROUGHEN INTERIOR SURFACE OF CORE WHERE NON-SHRINK GROUT WILL BE INSTALLED.
5. INSTALL NEW PIPE AND MODULAR SEAL GARLOCK LS-475, S-316 OR EQUAL.
6. INSTALL NEW COLLAR REINFORCING EACH FACE, EACH SIDE, ABOVE AND BELOW PIPE. HORIZONTAL REINFORCING TO HAVE COMBINED AREA EQUAL TO AREA OF HORIZONTAL REINFORCING CUT. VERTICAL REINFORCING TO HAVE COMBINED AREA EQUAL TO AREA OF VERTICAL REINFORCING CUT.
7. SOAK EXISTING CONCRETE SURFACES AND WITHIN 15-MINUTES CAST CONCRETE CLOSURE. (CONCRETE CLOSURE MUST BE CAST BEFORE HYDROPHILIC WATERSTOP EXPANDS). FORM GROOVE ON ALL SIDES OF OPENING EXCEPT AT TOP ON THE POUR SIDE.
8. CURE CONCRETE COLLAR AS REQUIRED BY PROJECT SPECIFICATIONS.
9. INSTALL BONDING AGENT AND NON-SHRINK GROUT. CURE IN ACCORDANCE WITH MANUFACTURER'S RECOMMENDATIONS.
10. CONTRACTOR TO PERFORM A NON-DESTRUCTIVE SURVEY (E.G., GPR) TO LOCATE VERTICAL AND HORIZONTAL REINFORCEMENT PRIOR TO CORING. THE CORE PENETRATION LOCATION MUST BE ADJUSTED TO AVOID DAMAGING REINFORCEMENT. SURVEY RESULTS TO BE SUBMITTED TO THE STRUCTURAL ENGINEER FOR REVIEW, AND WRITTEN APPROVAL IS REQUIRED BEFORE PROCEEDING WITH CORING.

3 PIPE PENETRATION - EXISTING WALL
NTS

STRUCTURAL/MECHANICAL
RESIDUALS BLEND TANK PLAN, SECTION AND DETAILS

PROJECT NO. TMUA-W 24-05

A.B. JEWELL WTP RESIDUALS IMPROVEMENTS PHASE 2

CITY OF TULSA, OKLAHOMA
WATER AND SEWER DEPARTMENT

PLANS AND ESTIMATES PREPARED BY:
Jacobs

VERIFY SCALE
BAR IS ONE INCH ON ORIGINAL DRAWING.
0 1"

LICENSED PROFESSIONAL ENGINEER
DAVID ANDREW JESSEP
23164
OKLAHOMA
05/11/2026

LICENSED PROFESSIONAL ENGINEER
B. LUKE LENARD
28364
OKLAHOMA
05/11/2026

REVISION	BY	DATE

PLAN SCALE: AS NOTED
PROFILE SCALE:
HORIZONTAL: N/A
VERTICAL N/A

DRAWN	SM	05/2026
DESIGNED	GG	05/2026
SURVEY		
PROJ. MGR.	KMW	6/26
LEAD ENGR.	DEW	6/26
FIELD MGR.	BCW	7/26

APPROVED:
DESIGN MANAGER
DATE: MAY 2026
FILE: DRAWING: SM-2
ATLAS PAGE NO: 543
SHEET 39 OF 47 SHEETS

ISSUED FOR BID

PATHNAME: 050-SM-5001_D3910200.dgn PLOT DATE: 05\06\2026 PLOT TIME: 11:39:23 AM

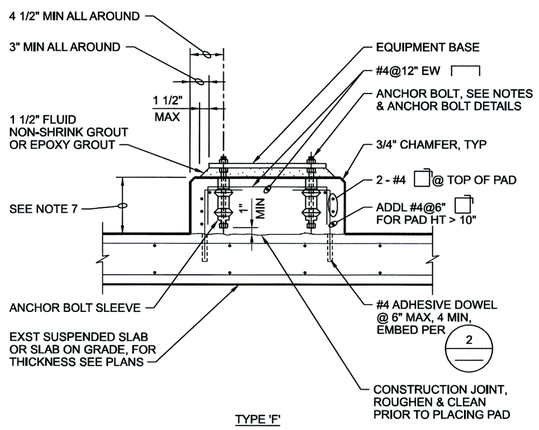

TYPE 'F'

NOTES:

1. PAD SIZE SHALL BE MINIMUM INDICATED OR AS SHOWN ON THE PLANS OR AS INDICATED BY THE MANUFACTURER AND APPROVED BY THE ENGINEER.
2. THE SIZE, NUMBER, TYPE, LOCATION, AND THREAD PROJECTION OF THE ANCHOR BOLTS SHALL BE DETERMINED BY THE EQUIPMENT MANUFACTURER AND AS APPROVED BY THE ENGINEER. ANCHOR BOLTS SHALL BE HELD IN POSITION WITH A TEMPLATE OR OTHER ACCEPTABLE MEANS, MATCHING THE BASE PLATE, WHILE PAD IS BEING PLACED.
3. ANCHOR BOLT SLEEVES SHALL BE USED TO PROVIDE MINIMUM ANCHOR BOLT MOVEMENT OF 1/2" IN ALL HORIZONTAL DIRECTIONS. THE MINIMUM SLEEVE LENGTH SHALL BE 8 TIMES THE BOLT DIAMETER.
4. ANCHOR BOLT SLEEVES SHALL HAVE A MINIMUM INTERNAL DIAMETER 1" GREATER THAN BOLT DIAMETER AND A MAXIMUM INTERNAL DIAMETER 3" GREATER THAN ANCHOR BOLT DIAMETER. SLEEVES SHALL BE FILLED WITH NON-SHRINK GROUT AFTER BOLTS ARE ALIGNED. SEE 3.
5. EQUIPMENT BASES SHALL BE INSTALLED LEVEL UNLESS INDICATED OTHERWISE.
6. WEDGES, SHIMS, OR LEVELING NUTS SHALL BE USED TO SUPPORT THE BASE WHILE THE GROUT IS PLACED. WEDGES OR SHIMS SHALL BE REMOVED AFTER GROUT IS SET AND PACK VOID WITH GROUT.
7. HEIGHT OF PADS SHALL BE MINIMUM REQUIRED FOR ANCHOR BOLT CLEARANCE TO KEEP ANCHOR BOLT ABOVE SUPPORTING SLAB (SEE TABLE BELOW). WHERE EQUIPMENT OR PIPING ELEVATION REQUIRE A PAD HEIGHT LESS THAN THE MINIMUM SHOWN, USE TYPE "B" EQUIPMENT PAD WITH BLOCKOUT.
8. TYPE "D" PAD SHALL BE USED ONLY WHERE SPECIFICALLY INDICATED. PLACE THE SURROUNDING FLOOR SLAB AFTER THE EQUIPMENT PAD.
9. AT CONTRACTOR'S OPTION, CONCRETE ANCHORS MAY BE USED IN LIEU OF CAST-IN-PLACE ANCHOR BOLTS FOR EQUIPMENT ANCHOR BOLTS LESS THAN 3/4" DIAMETER WHEN APPROVED BY THE EQUIPMENT MANUFACTURER AND APPROVED BY THE ENGINEER. ANCHORS SHALL BE INSTALLED WITH 4" MINIMUM EDGE DISTANCE IN EACH DIRECTION.

AB DIA (IN.)	1/2	5/8	3/4	7/8	1	1 1/4	1 3/8	1 1/2	1 3/4	2
MIN PAD HT (IN.)	7	8 1/2	10	11	12 1/2	15	16 1/2	18	21	24

1 CONCRETE EQUIPMENT PAD

NTS

M-3

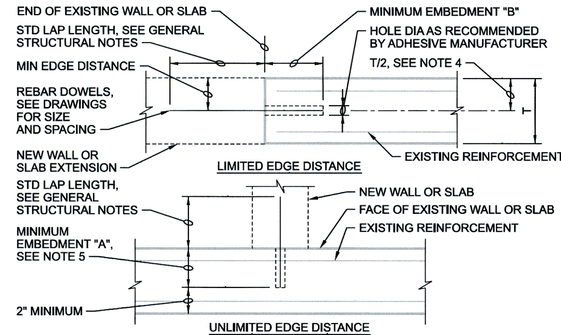

DOWEL SIZE	MINIMUM EDGE DISTANCE	MINIMUM EMBEDMENT "A"	MINIMUM EMBEDMENT "B"
#3	2 1/2"	5"	8"
#4	3 1/2"	7"	11"
#5	4"	8"	13"
#6	5"	10 1/2"	16"
#7	6"	12 1/2"	20"
#8	7"	14"	22"
#9	7 1/2"	15"	24"

NOTES:

1. CONFORM TO REQUIREMENTS OF SPECIFICATION SECTION 03 63 00, CONCRETE DOWELING.
2. FOLLOW ADHESIVE MANUFACTURER'S INSTRUCTIONS FOR INSTALLATION.
3. USE MINIMUM EMBEDMENTS SHOWN, EXCEPT USE MANUFACTURER'S MINIMUM RECOMMENDED EMBEDMENT IF GREATER.
4. LOCATE DOWELS CENTERED IN WALL OR SLAB UNLESS OTHERWISE NOTED ON DRAWINGS. WHERE 2 ROWS OF DOWELS INDICATED, STAGGER SPACING & LOCATE ALTERNATING DOWELS AT MINIMUM EDGE DISTANCE FROM OPPOSITE FACES.
5. PROVIDE MINIMUM EMBEDMENT "A" SHOWN IN TABLE UNLESS SHORTER EMBEDMENT DEPTH IS CALLED OUT ON DRAWINGS.

2 ADHESIVE DOWEL

NTS

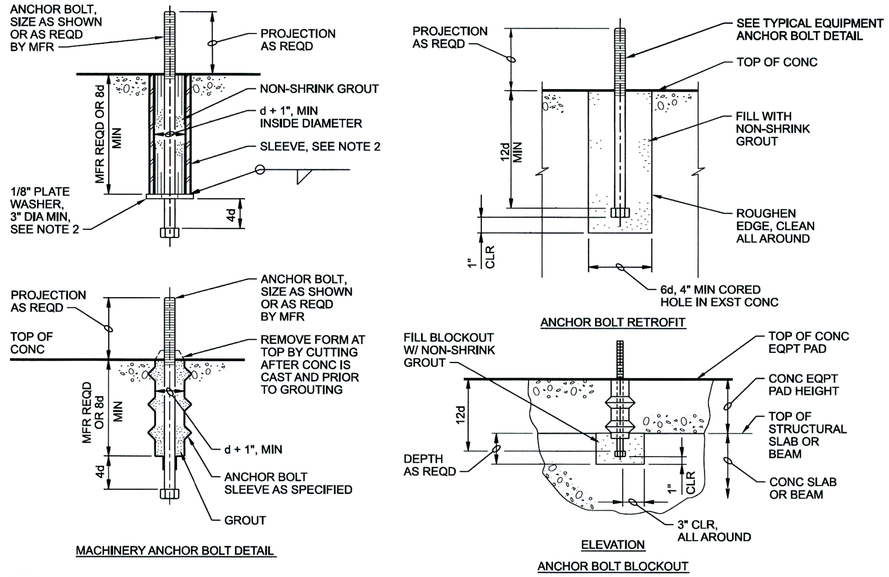

NOTES:

1. FOR CONCRETE EQUIPMENT PAD DETAILS AND NOTES NOT SHOWN SEE 1.
2. MATERIAL TO MATCH BOLT.

3 ANCHOR BOLT DETAILS

NTS

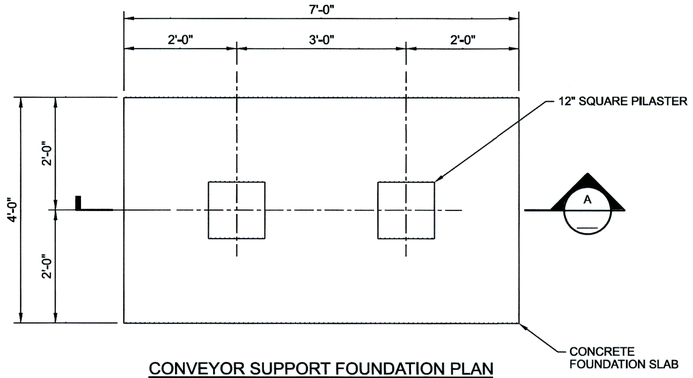

CONVEYOR SUPPORT FOUNDATION PLAN

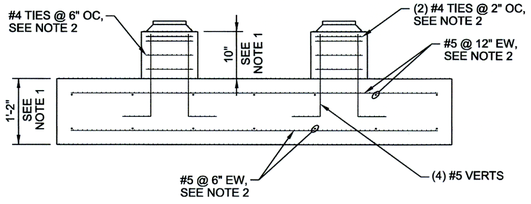

SECTION A

NOTES:

1. DIMENSIONS TO BE CONFIRMED ONCE SUPPORT LAYOUT AND LOADS ARE PROVIDED BY CONVEYOR MANUFACTURER.
2. REINFORCEMENT TO BE CONFIRMED ONCE SUPPORT LAYOUT AND LOADS ARE PROVIDED BY CONVEYOR MANUFACTURER.

4 CONVEYOR SUPPORT FOUNDATION

3/4"=1'-0"

M-3

VERIFY SCALE

BAR IS ONE INCH ON ORIGINAL DRAWING. 0 1"

REVISION	BY	DATE

LICENSED PROFESSIONAL ENGINEER — DAVID ANDREW JESSEP — 23164 — OKLAHOMA

05/11/2026

STRUCTURAL
CMU WALL DETAILS

PROJECT NO. TMUA-W 24-05

A.B. JEWELL WTP RESIDUALS IMPROVEMENTS PHASE 2

CITY OF TULSA, OKLAHOMA
WATER AND SEWER DEPARTMENT

PLANS AND ESTIMATES PREPARED BY: Jacobs

PLAN SCALE: AS NOTED	DRAWN	SM	05/2026	APPROVED:
	DESIGNED	MN	05/2026	
PROFILE SCALE:	SURVEY			
HORIZONTAL: N/A	PROJ. MGR.	KHN	6/2/26	
	LEAD ENGR.	DEW	6/1/26	
VERTICAL N/A	FIELD MGR.		7/26	DESIGN MANAGER
FILE:	DRAWING: S-1			DATE: MAY 2026
ATLAS PAGE NO: 543				SHEET 40 OF 47 SHEETS

ISSUED FOR BID

PATHNAME: 040-D-S003.DGN PLOT DATE: 05/06/2026 PLOT TIME: 11:32:31 AM

GENERAL NOTES

1. DEENERGIZE EQUIPMENT THEN TEMPORARILY REMOVE POWER AND CONTROL WIRING. RECONNECT WIRING TO NEW EQUIPMENT.
2. DEMOLISH THE AIR COMPRESSOR CONTROL PANEL AND REPLACE IT WITH A NON-FUSED DISCONNECT SWITCH. MAINTAIN WIRING.
3. FIELD ROUTE POWER CABLING FOR THE TEMPORARY MOBILE DEWATERING UNIT WITHOUT PROPPING ANY DOORS OPEN. PROTECT CABLING FROM DAMAGE.

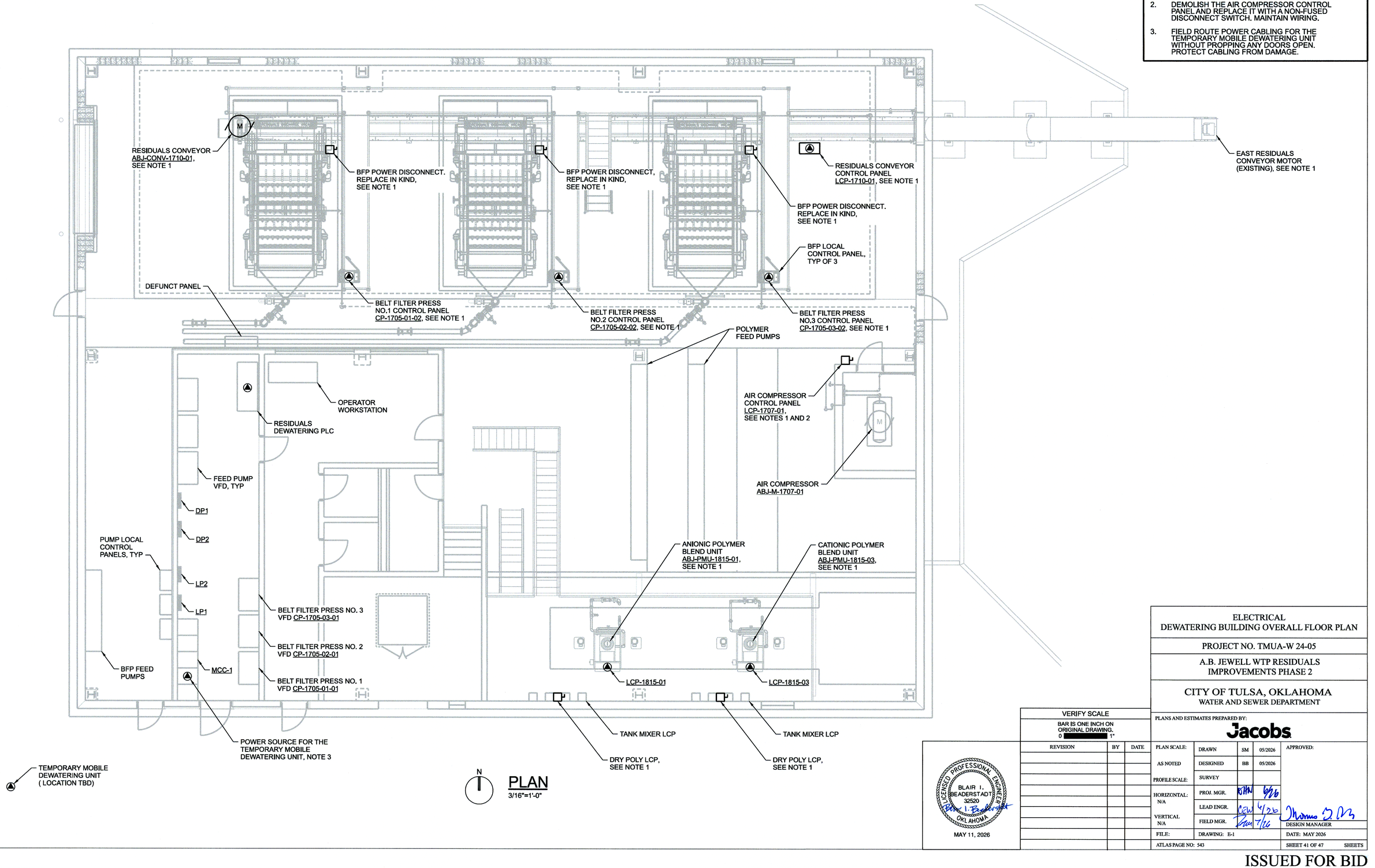

PLAN
3/16"=1'-0"

PATHNAME: 040-E-2001_D3910200.dgn PLOT DATE: 05/06/2026 PLOT TIME: 11:44:57 AM

VERIFY SCALE
BAR IS ONE INCH ON ORIGINAL DRAWING.
0 1"

REVISION	BY	DATE

LICENSED PROFESSIONAL ENGINEER
BLAIR I. BEADERSTADT
32520
OKLAHOMA
MAY 11, 2026

ELECTRICAL
DEWATERING BUILDING OVERALL FLOOR PLAN

PROJECT NO. TMUA-W 24-05

A.B. JEWELL WTP RESIDUALS IMPROVEMENTS PHASE 2

CITY OF TULSA, OKLAHOMA
WATER AND SEWER DEPARTMENT

PLANS AND ESTIMATES PREPARED BY:
Jacobs

PLAN SCALE: AS NOTED	DRAWN	SM	05/2026	APPROVED:
	DESIGNED	BB	05/2026	
PROFILE SCALE:	SURVEY			
HORIZONTAL: N/A	PROJ. MGR.	KHN	6/26	
	LEAD ENGR.	CEW	6/26	
VERTICAL N/A	FIELD MGR.	DAM	7/26	DESIGN MANAGER
FILE:	DRAWING: E-1			DATE: MAY 2026
ATLAS PAGE NO: 543				SHEET 41 OF 47 SHEETS

ISSUED FOR BID

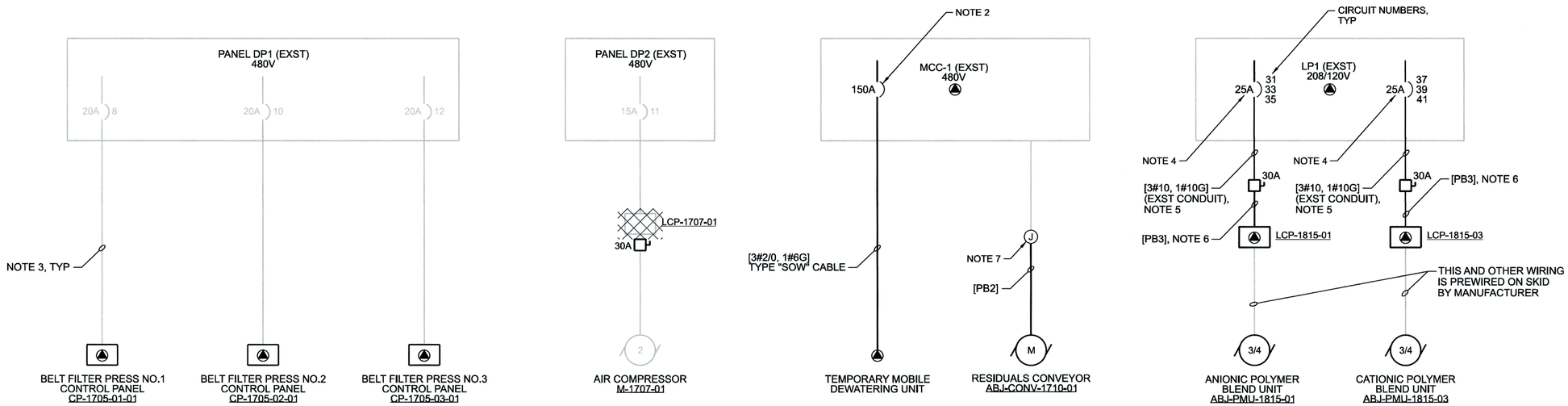

ONE LINE DIAGRAM

NTS

GENERAL NOTES

1. THIS IS A PARTIAL ONE-LINE DIAGRAM. NOT ALL EXISTING EQUIPMENT IS SHOWN FOR CLARITY.
2. IN THE BOTTOM CUBICLE OF MCC-1, SECTION 2, REMOVE THE EXISTING 15A SPARE CIRCUIT BREAKER AND REPLACE IT WITH A NEW 150A CIRCUIT BREAKER FOR THE TEMPORARY MOBILE DEWATERING UNIT. RETURN THE SPARE CIRCUIT BREAKER TO THE OWNER FOR FUTURE USE.
3. REUSE CONDUIT AND CONDUCTORS FOR NEW EQUIPMENT.
4. REPLACE THE EXISTING 20A/3P CIRCUIT BREAKER WITH A NEW 25A/3P CIRCUIT BREAKER. PANELBOARD IS GE, A SERIES.
5. REMOVE EXISTING CONDUCTORS THEN INSTALL NEW LARGER CONDUCTORS AS IDENTIFIED. REUSE EXISTING CONDUIT.
6. INTERCEPT CONDUIT AT EXISTING DRY POLY LCP AND EXTEND IT TO THE NEW LCP ON THE SKID.
7. INTERCEPT CONDUIT AND WIRING TO EXISTING CONVEYOR MOTOR AND PROVIDE NEW CONDUIT AND WIRING OVER TO THE NEW LOCATION OF THE CONVEYOR MOTOR.
8. COORDINATE WIRING REQUIREMENTS OF THE E-STOP SYSTEM WITH THE BFP MANUFACTURER.

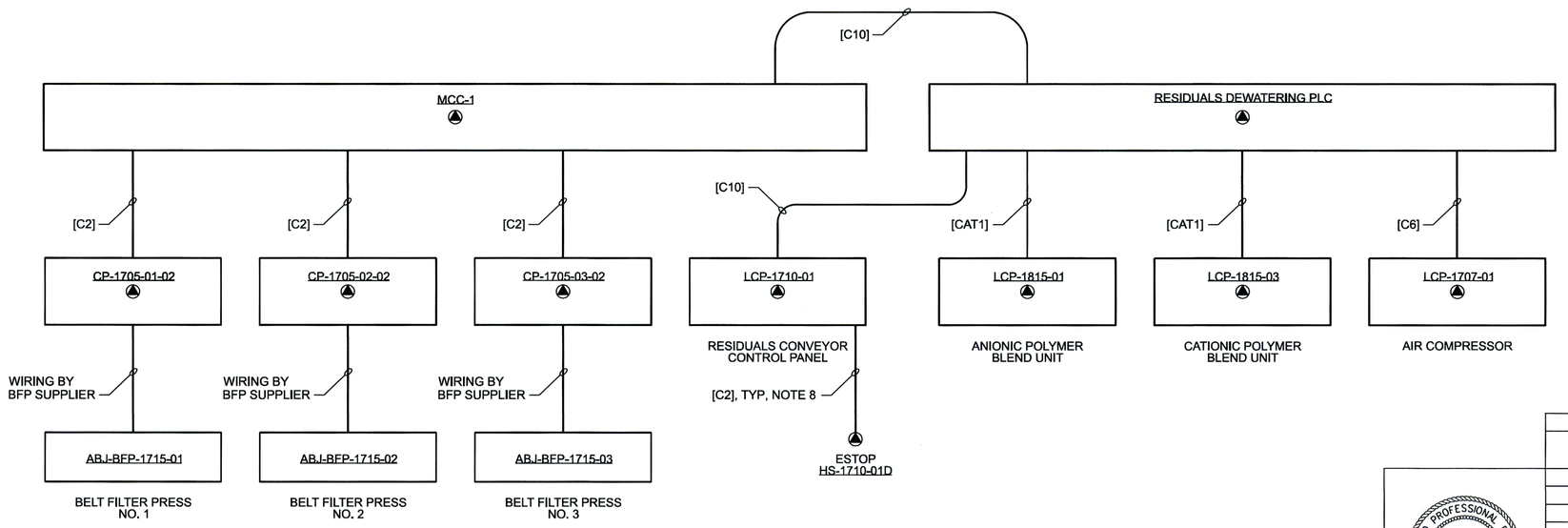

CABLE BLOCK DIAGRAM

NTS

VERIFY SCALE

BAR IS ONE INCH ON ORIGINAL DRAWING.
0 1"

REVISION	BY	DATE

LICENSED PROFESSIONAL ENGINEER
BLAIR I. BEADERSTADT
32520
OKLAHOMA
MAY 11, 2026

ELECTRICAL
ONE LINE DIAGRAM AND CABLE BLOCK DIAGRAM

PROJECT NO. TMUA-W 24-05

A.B. JEWELL WTP RESIDUALS IMPROVEMENTS PHASE 2

CITY OF TULSA, OKLAHOMA
WATER AND SEWER DEPARTMENT

PLANS AND ESTIMATES PREPARED BY:
Jacobs

PLAN SCALE: AS NOTED	DRAWN	SM	05/2026	APPROVED:
	DESIGNED	BB	05/2026	
PROFILE SCALE:	SURVEY			
HORIZONTAL: N/A	PROJ. MGR.	KMN	4/26	
	LEAD ENGR.	MSW	4/26	
VERTICAL N/A	FIELD MGR.		7/26	DESIGN MANAGER
FILE:	DRAWING: E-2			DATE: MAY 2026
ATLAS PAGE NO: 543				SHEET 42 OF 47 SHEETS

ISSUED FOR BID

PATHNAME: 040-E4001_D3910200.dgn PLOT DATE: 05/06/2026 PLOT TIME: 11:48:01 AM

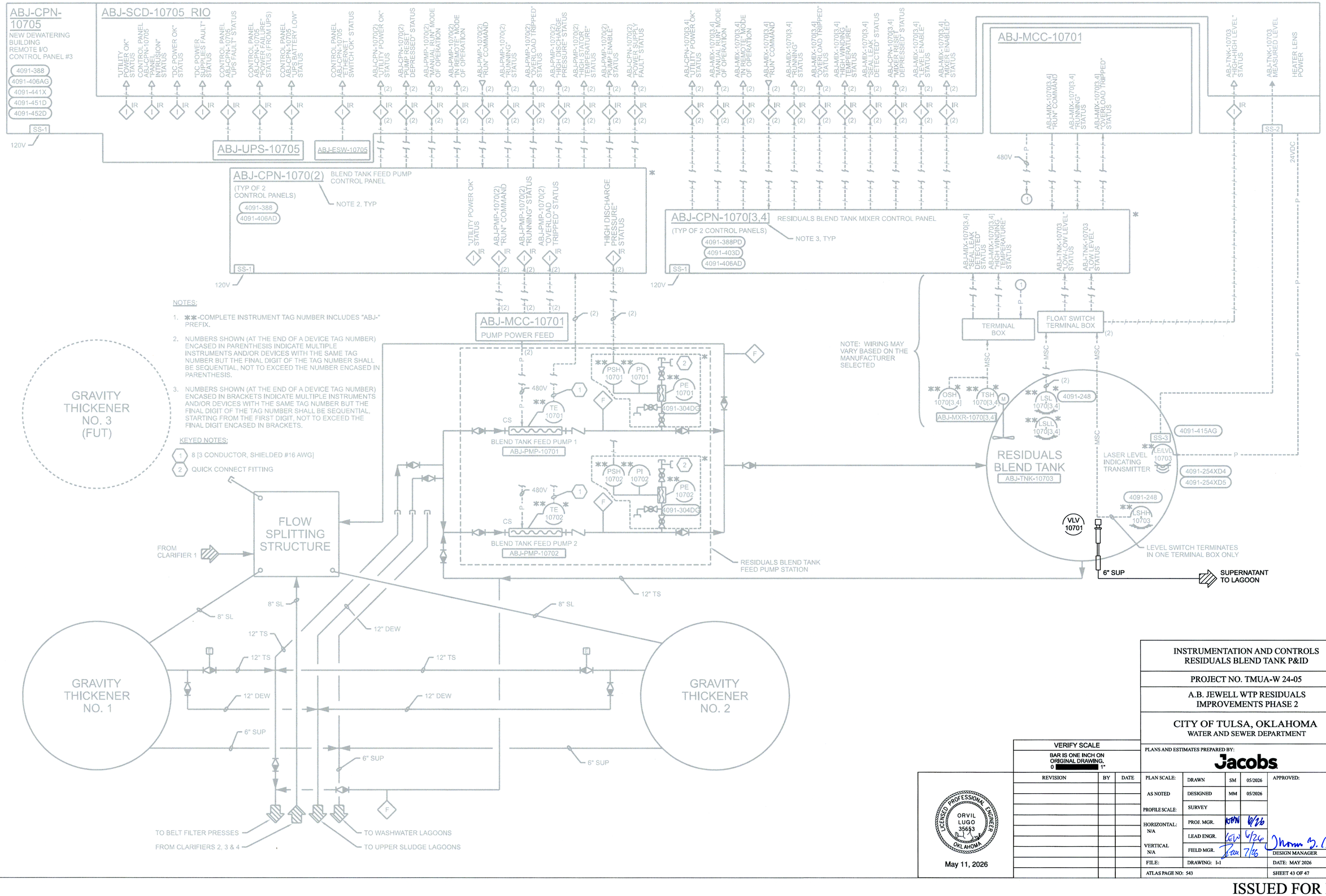

PATHNAME: 09-N-0001_D3910200.dgn PLOT DATE: 05/06/2026 PLOT TIME: 11:52:00 AM

VERIFY SCALE
BAR IS ONE INCH ON ORIGINAL DRAWING.
0 1"

REVISION	BY	DATE

LICENSED PROFESSIONAL ENGINEER
ORVIL LUGO
35653
OKLAHOMA
May 11, 2026

INSTRUMENTATION AND CONTROLS
RESIDUALS BLEND TANK P&ID

PROJECT NO. TMUA-W 24-05

A.B. JEWELL WTP RESIDUALS IMPROVEMENTS PHASE 2

CITY OF TULSA, OKLAHOMA
WATER AND SEWER DEPARTMENT

PLANS AND ESTIMATES PREPARED BY: Jacobs

PLAN SCALE: AS NOTED	DRAWN	SM	05/2026	APPROVED:
	DESIGNED	MM	05/2026	
PROFILE SCALE:	SURVEY			
HORIZONTAL: N/A	PROJ. MGR.	KBN	6/26	
	LEAD ENGR.	KEW	6/26	
VERTICAL N/A	FIELD MGR.		7/26	DESIGN MANAGER
FILE:	DRAWING: I-1			DATE: MAY 2026
ATLAS PAGE NO: 543				SHEET 43 OF 47 SHEETS

ISSUED FOR BID

SHEET KEYNOTES

1. WIRING REPLACEMENT BY BFP SUPPLIER.
2. ESTOP CABLES TO BE WIRED IN SERIES WITH THE ESTOP PB TO SHUT OFF CONVEYOR.

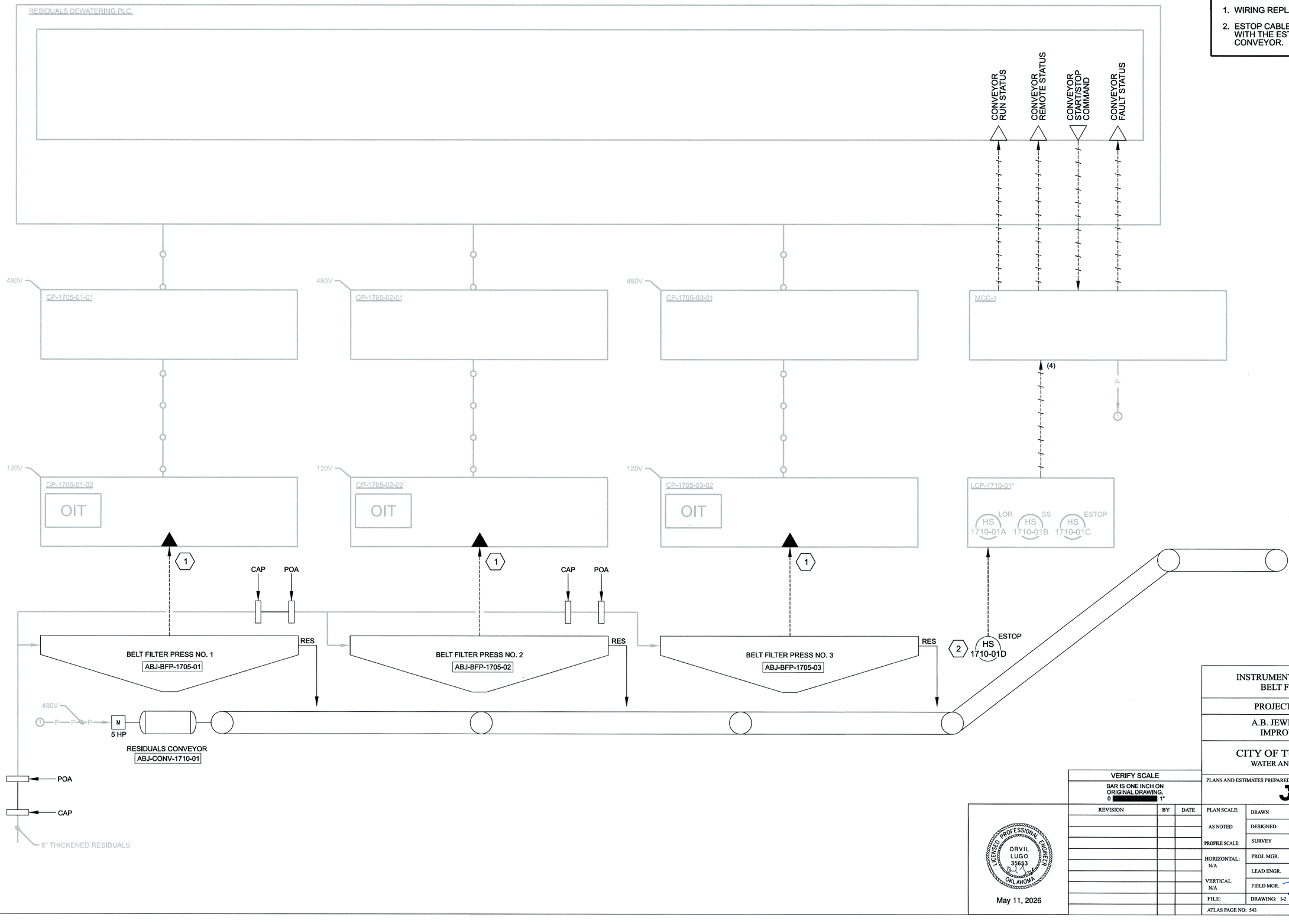

PATHNAME: 09-N-0002_D3910200.dgn PLOT DATE: 05/06/2026 PLOT TIME: 11:50:59 AM

VERIFY SCALE
BAR IS ONE INCH ON ORIGINAL DRAWING.
0 1"

REVISION	BY	DATE

LICENSED PROFESSIONAL ENGINEER
ORVIL LUGO
35653
OKLAHOMA
May 11, 2026

INSTRUMENTATION AND CONTROLS
BELT FILTER PRESS P&ID

PROJECT NO. TMUA-W 24-05

A.B. JEWELL WTP RESIDUALS IMPROVEMENTS PHASE 2

CITY OF TULSA, OKLAHOMA
WATER AND SEWER DEPARTMENT

PLANS AND ESTIMATES PREPARED BY:
Jacobs

PLAN SCALE: AS NOTED	DRAWN	SM	05/2026	APPROVED:
PROFILE SCALE:	DESIGNED	MM	05/2026	
HORIZONTAL: N/A	SURVEY			
VERTICAL N/A	PROJ. MGR.			
	LEAD ENGR.			DESIGN MANAGER
FILE:	FIELD MGR.			DATE: MAY 2026
ATLAS PAGE NO: 543	DRAWING: I-2			SHEET 44 OF 47 SHEETS

ISSUED FOR BID

SHEET KEYNOTES

1. ALL INSTRUMENT AND CONTROL BY POLYMER SYSTEM VENDOR WITHIN BOUNDARY.
2. PROVIDE FOUR (4) NEW VEGA RADAR LEVEL SENSORS ON EXISTING TANKS.
3. DESIGN OF THE DRY POLYMER SYSTEM LAYOUT SHOWN IS BASED ON PROMINENT MODEL POLYREX 5.4.
4. VACUUM CONVEYOR (1.75 HP MOTOR) IS AN OPTIONAL ITEM FOR THE DRY POLYMER SYSTEM. MANUAL HOPPER DUMP ALONE IS ACCEPTABLE.

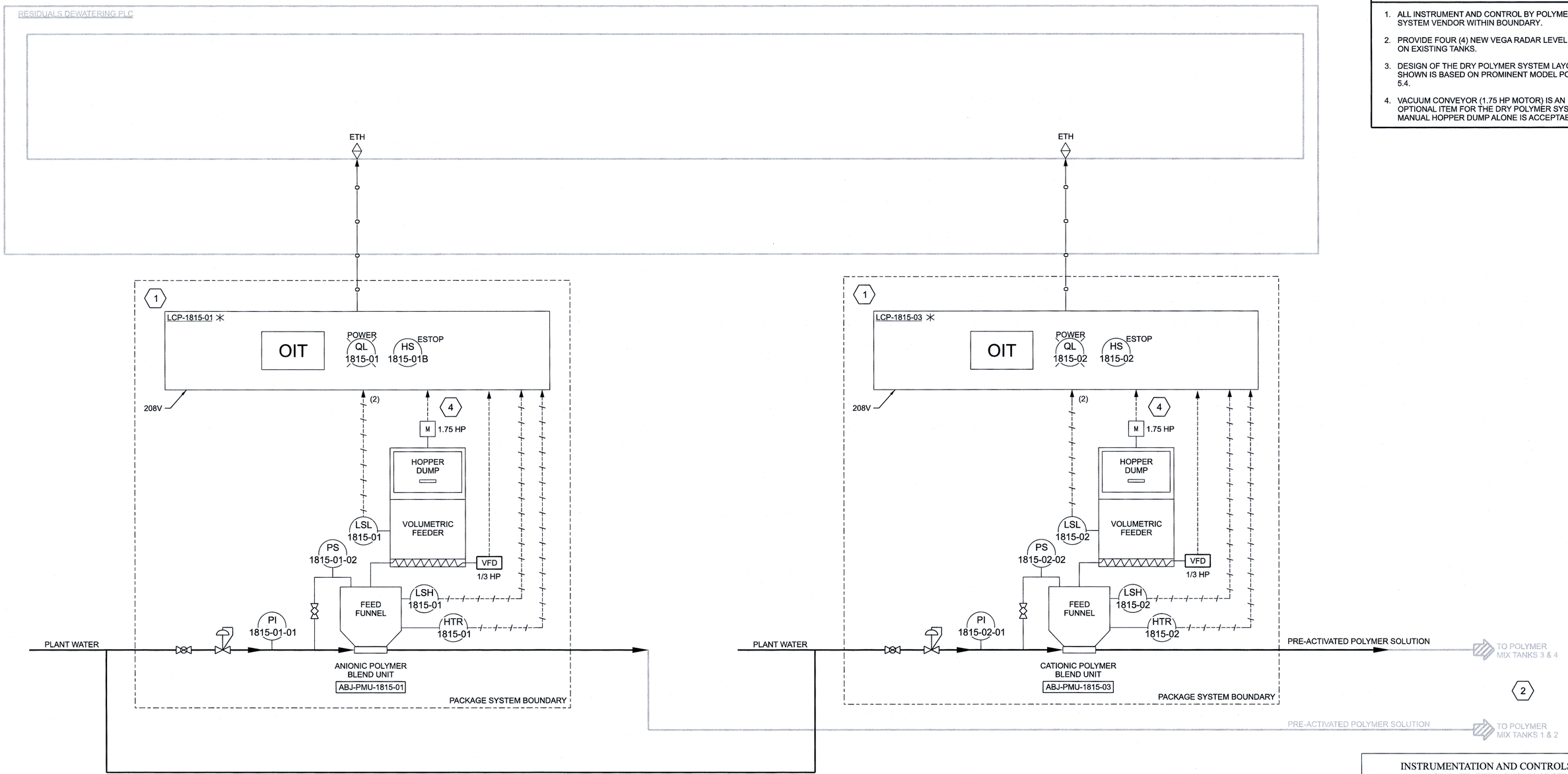

INSTRUMENTATION AND CONTROLS
DRY POLYMER FEED SYSTEM P&ID

PROJECT NO. TMUA-W 24-05

A.B. JEWELL WTP RESIDUALS IMPROVEMENTS PHASE 2

CITY OF TULSA, OKLAHOMA
WATER AND SEWER DEPARTMENT

VERIFY SCALE
BAR IS ONE INCH ON ORIGINAL DRAWING.
0 1"

PLANS AND ESTIMATES PREPARED BY:
Jacobs

REVISION	BY	DATE

LICENSED PROFESSIONAL ENGINEER
ORVIL LUGO
35653
OKLAHOMA
May 11, 2026

PLAN SCALE: AS NOTED	DRAWN	SM	05/2026	APPROVED:
	DESIGNED	MM	05/2026	
PROFILE SCALE:	SURVEY			
HORIZONTAL: N/A	PROJ. MGR.	KHW	6/26	
	LEAD ENGR.	CEW	6/26	
VERTICAL N/A	FIELD MGR.		7/26	DESIGN MANAGER
FILE:	DRAWING: I-3			DATE: MAY 2026
ATLAS PAGE NO: 543				SHEET 45 OF 47 SHEETS

ISSUED FOR BID

PATHNAME: 09-N-0003_D3910200.dgn PLOT DATE: 05/06/2026 PLOT TIME: 11:54:32 AM

SHEET KEYNOTES

1. LEVEL ELEMENTS AND LEVEL INDICATING TRANSMITTERS ON POLYMER MIXING TANKS TO BE REPLACED BY TAGS: LE/LIT 1820-01, LE/LIT 1820-02, LE/LIT 1820-03, LE/LIT 1820-04.

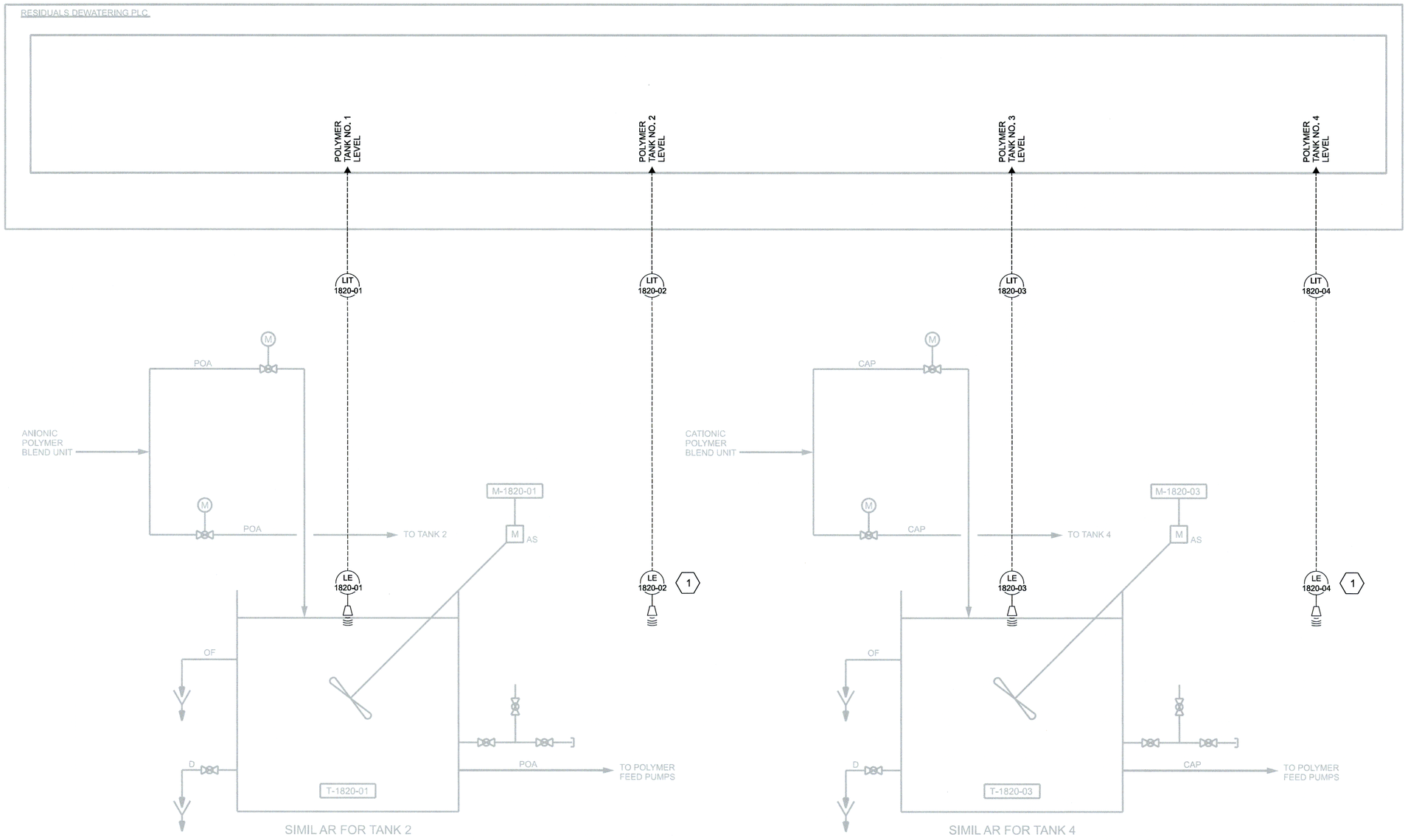

PATHNAME: 09-N-0004_D3910200.dgn PLOT DATE: 05/06/2026 PLOT TIME: 11:55:37 AM

VERIFY SCALE
BAR IS ONE INCH ON ORIGINAL DRAWING. 0 ▬▬ 1"

REVISION	BY	DATE

LICENSED PROFESSIONAL ENGINEER
ORVIL LUGO
35653
OKLAHOMA
May 11, 2026

INSTRUMENTATION AND CONTROLS
POLYMER TANK LEVEL P&ID

PROJECT NO. TMUA-W 24-05

A.B. JEWELL WTP RESIDUALS IMPROVEMENTS PHASE 2

CITY OF TULSA, OKLAHOMA
WATER AND SEWER DEPARTMENT

PLANS AND ESTIMATES PREPARED BY:
Jacobs

PLAN SCALE: AS NOTED	DRAWN	SM	05/2026	APPROVED:
	DESIGNED	MM	05/2026	
PROFILE SCALE:	SURVEY			
HORIZONTAL: N/A	PROJ. MGR.	NHN	6/26	
	LEAD ENGR.		6/26	
VERTICAL N/A	FIELD MGR.		7/26	DESIGN MANAGER
FILE:	DRAWING: I-4			DATE: MAY 2026
ATLAS PAGE NO: 543				SHEET 46 OF 47 SHEETS

ISSUED FOR BID

RESIDUALS DEWATERING PLC

EXISTING MCC BREAKER

2

M

M

AIR COMPRESSOR NO. 1
ABJ-M-1707-01

CA

1

CA

3

COMPRESSED AIR STORAGE TANK

1

CA

TO BUILDING COMPRESSED AIR CONNECTIONS FOR MAINTENANCE

CA

TO BELT FILTER PRESS

3

SHEET KEYNOTES

1. ALL AUXILIARY AIR COMPRESSOR LINES AND VALVES FOR AIR COMPRESSOR SHALL BE REPLACED TO MATCH EXISTING PIPING, BUT AIR COMPRESSOR AND STORAGE TANK WILL NOT BE REPLACED. FIELD ROUTE PIPING TO MATCH EXISTING ROUTING. SEE DEMOLITION DETAILS 11-15 ON DRAWING D-4 FOR EXTENT OF PIPING REPLACEMENT AND TANK PIPING CONNECTIONS.
2. NEW FIELD DISCONNECT.
3. PROVIDE COMPRESSED AIR FILTERS AS SPECIFIED IN SECTION 40 27 01 PROCESS PIPING SPECIALITIES.

PATHNAME: 09-N-0005_D3910200.dgn PLOT DATE: 05/06/2026 PLOT TIME: 11:58:19 AM

LICENSED PROFESSIONAL ENGINEER
ORVIL LUGO
35653
OKLAHOMA
May 11, 2026

VERIFY SCALE
BAR IS ONE INCH ON ORIGINAL DRAWING.
0 1"

REVISION	BY	DATE

INSTRUMENTATION AND CONTROLS
MISC. UTILITIES P&ID

PROJECT NO. TMUA-W 24-05

A.B. JEWELL WTP RESIDUALS IMPROVEMENTS PHASE 2

CITY OF TULSA, OKLAHOMA
WATER AND SEWER DEPARTMENT

PLANS AND ESTIMATES PREPARED BY:
Jacobs

PLAN SCALE: AS NOTED	DRAWN	SM	05/2026	APPROVED:
	DESIGNED	MM	05/2026	
PROFILE SCALE:	SURVEY			
HORIZONTAL: N/A	PROJ. MGR.	AHN	6/26	
	LEAD ENGR.		6/26	
VERTICAL N/A	FIELD MGR.		7/26	DESIGN MANAGER
FILE:	DRAWING: I-5			DATE: MAY 2026
ATLAS PAGE NO: 543				SHEET 47 OF 47 SHEETS

ISSUED FOR BID