INDEX TO DRAWINGS

SHEET NO.	DESCRIPTION
CS	COVER SHEET
01	G001 GENERAL INFORMATION AND CODE ANALYSIS
02	G002 PAY ITEM SCHEDULE AND NOTES
03	G003 PAY ITEM SCHEDULE AND NOTES
04	C100 GENERAL NOTES
05	C300 DEMOLITION PLAN
06	C301 EROSION CONTROL PLAN
07	C400 OVERALL SITE PLAN
08	C401 SITE PLAN
09	C500 GRADING PLAN
10	C501 DRAINAGE AREA MAP
11	C600 UTILITY PLAN
12	C700 UTILITY PROFILES
13	C800 DETAILS
14	C801 DETAILS
15	AS101 ARCHITECTURAL SITE PLAN
16	D110 DEMOLITION PLAN
17	A001 SCHEDULES AND NOTES
18	A002 EQUIPMENT SCHEDULE AND DETAILS
19	A003 PARTITION TYPES AND DETAILS
20	A111 FLOOR PLANS
21	A113 ROOF AND REFLECTED CEILING PLANS
22	A201 EXTERIOR ELEVATIONS
23	A301 WALL SECTIONS
24	A302 WALL SECTIONS
25	A303 WALL SECTIONS
26	A304 WALL SECTIONS
27	A501 DETAILS
28	A502 DETAILS
29	S001 GENERAL NOTES
30	S002 SPECIAL INSPECTION TABLES
31	S003 TYPICAL DETAILS
32	S101 FOUNDATION PLAN
33	S102 ROOF FRAMING PLAN
34	S301 SCHEDULES
35	S302 ELEVATIONS
36	S401 FOUNDATION DETAILS
37	S501 TYPICAL FRAMING DETAILS
38	S502 FRAMING DETAILS
39	S503 FRAMING DETAILS
40	MP001 MECHANICAL COVERSHEET
41	M101 MECHANICAL FLOOR PLAN
42	M301 MECHANICAL DETAILS AND SCHEDULES
43	E101 INDEX SHEET
44	E102 EXISTING ONE-LINE DIAGRAM
45	E103 ONE-LINE DIAGAGRAM, FEEDER SCHEDULE & SCHEMATIC
46	E104 OVERALL SITE PLAN
47	E105 NEW POWER PLAN
48	E106 NEW POWER PLAN
49	E107 NEW LIGHTING PLAN
50	E108 POOL CAMERA SECURITY
51	E109 PANEL SCHEDULES
52	E110 WEIGHT ROOM/OFFICE RENOVATIONS
53	P100 PLUMBING DEMO PLAN
54	P101 PLUMBING FLOOR PLAN
55	P301 PLUMBING SCHEDULES
56	P401 PLUMBING DETAILS
57	SP0.0 POOL REFERENCE PLAN
58	SP1.0 POOL PLAN
59	SP1.1 POOL SECTIONS
60	SP1.2 POOL DETAILS
61	SP1.3 POOL DETAILS
62	SP1.4 POOL DETAILS
63	SP2.0 POOL LOCATION POINT PLAIN
64	SP3.0 POOL SUCTION PIPING PLAN
65	SP3.1 POOL RETURN PIPING PLAN
66	SP4.0 POOL MECHANICAL ROOM PLAN & SECTIONS
67	SP4.1 POOL MECHANICAL DETAILS
68	SP4.2 POOL MECHANICAL DETAILS
69	SP4.3 POOL MECHANICAL DETAILS
70	SP5.0 POOL SYSTEMS SCHEMATIC
71	SP6.0 POOL STRUCTURAL PLAN
72	SP6.1 POOL STRUCTURAL NOTES & DETAILS
73	SP6.2 POOL STRUCTURAL DETAILS
74	SP6.3 POOL STRUCTURAL SECTIONS

CONSTRUCTION PLANS FOR

TULSA PARKS DEPARTMENT
LACY POOL RECONSTRUCTION

PROJECT NO. 147400

ACCOUNT NO. 6014-5455302-005011147400

CITY OF TULSA, OKLAHOMA
ENGINEERING SERVICES DEPARTMENT

PROJECT SITE
2134 N. MADISON PLACE
TULSA, OK 74106

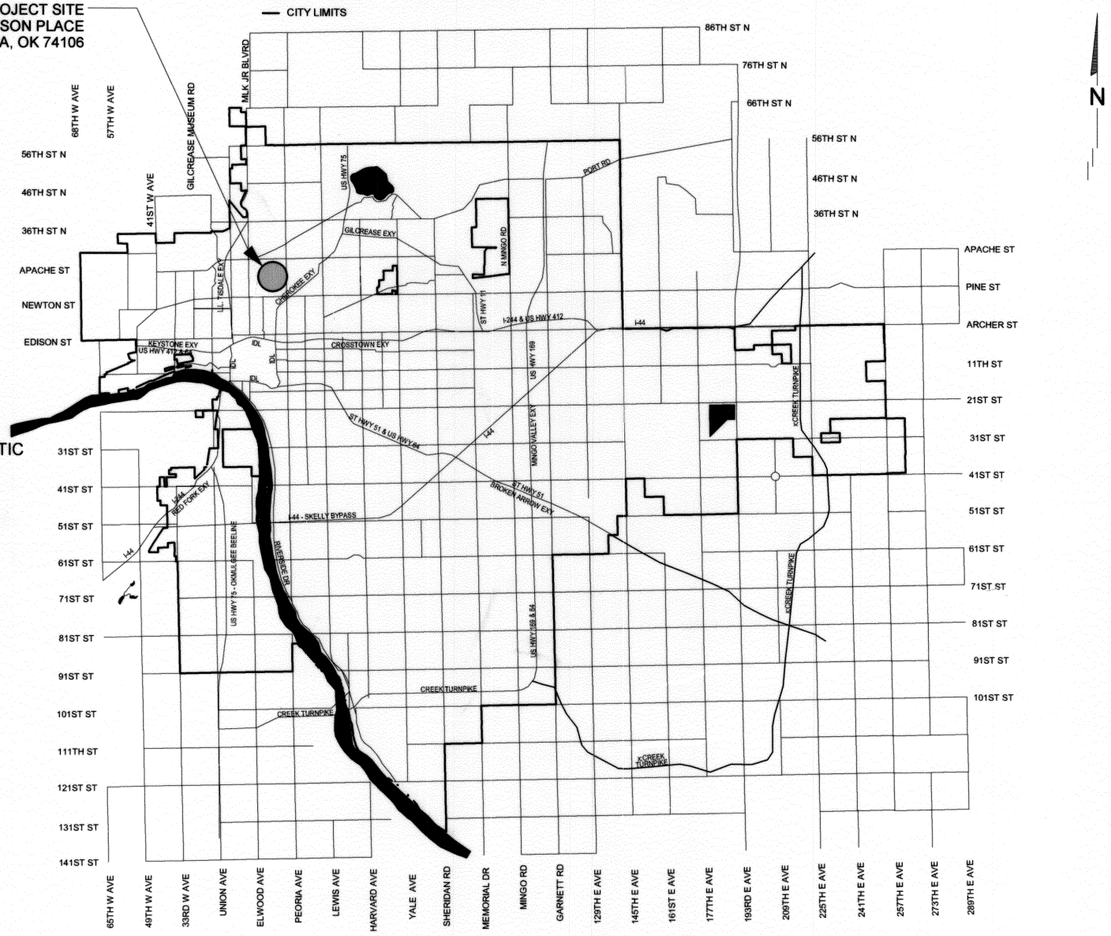

GENERAL NOTES:

ALL CONSTRUCTION SHALL BE IN STRICT ACCORDANCE WITH CURRENT CITY OF TULSA CODES AND ORDINANCES, ENGINEERING SERVICES STANDARDS, TULSA PARKS STANDARDS AND SPECIFICATIONS (CITY OF TULSA ORDINANCES AND CODE AMENDMENTS SUPERCEDE NATIONAL CODES.)

CONTRACTOR SHALL BE RESPONSIBLE FOR DAMAGE TO ALL STRUCTURES, LANDSCAPING, PAVING, AND ANY OTHER ITEMS LOCATED WITHIN AND OUTSIDE THE WORK AREA. ANY DAMAGE TO PERMANENT ITEMS INCURRED BY THE CONTRACTOR THROUGH HIS WORK IN THIS CONTRACT SHALL BE REPAIRED TO ORIGINAL CONDITION, BY THE CONTRACTOR, AT HIS OWN EXPENSE.

CONTRACTORS WILL COORDINATE WITH IDENTIFIED MAINTENANCE OPERATIONS PERSONNEL FOR APPLICATION, SHUT OFF, AND REMOVAL OF ALL UTILITIES.

VERIFY ALL DIMENSIONS AND EXISTING STRUCTURAL MEMBER SIZES IN THE FIELD PRIOR TO FABRICATION OF STRUCTURAL ITEMS. EXISTING PORTION OF PLANS ARE FROM A PRELIMINARY FIELD SURVEY, WHICH MAY OR MAY NOT REFLECT ACTUAL AS-BUILT CONDITIONS OR DIMENSIONS. IF ANY DISCREPANCIES ARE FOUND BETWEEN WHAT IS SHOWN ON THE DRAWINGS AND WHAT EXISTS IN THE FIELD, CONTACT THE ARCHITECT TO DETERMINE WHAT SHOULD BE DONE TO MATCH EXISTING CONDITION AS REQUIRED. BEGINNING OF FABRICATION MEANS ACCEPTANCE OF EXISTING CONDITIONS.

UTILITY COORDINATION BOX

	NUMBER
WATER DESIGN	918-596-9566
WASTEWATER DESIGN	918-596-9564
TRANSPORTATION DESIGN	918-596-9636
TRAFFIC ENGINEERING DESIGN	918-596-9741
STORMWATER DESIGN	918-596-9498
PSO/AEP	918-250-6257
ONG	918-831-8261
AT&T	918-576-2142
MCI	918-325-0187
COX COMMUNICATIONS	918-286-4716
CITY OF TULSA UTILITY COORDINATOR	918-596-9649
PARKS MAINTENANCE	918-596-2486

ARCHITECT & LANDSCAPE

GH2 ARCHITECTS

GH2 ARCHITECTS, LLC
320 SOUTH BOSTON, SUITE 100 TULSA, OK 74103
918.587.6158, FAX 918.587.0357,WWW.GH2.COM

STATE OF OKLAHOMA — MICHAEL RAY PECK — No. 33811 — TULSA, OK — LICENSED ARCHITECT

10-24-16

POOL DESIGN

Counsilman-Hunsaker AQUATICS FOR LIFE

COUNSILMAN-HUNSAKER
1073 SUNSET OFFICE DRIVE
314.894.1245, FAX 314.894.0109,
WWW.COUNSILMANHUNSAKER.COM

STRUCTURAL & MP

PEC

PEC
CHEROKEE BUILDING 4150 S. 100TH E. AVE., SUITE 401
TULSA, OK 74146
918.664.5400, WWW.PEC1.COM

CIVIL

wallace

WALLACE ENGINEERING
STRUCTURAL AND CIVIL CONSULTANTS
200 EAST MATHEW BRADY STREET TULSA, OK 74103
918.584.5858, WWW.WALLACESC.COM

ELECTRICAL

DWGATES Engineering Services

D.W. GATES ENGINEERING
616 S. MAIN ST, SUITE 112, TULSA, OK 74119
918.583.6905, WWW.DWGATESENGINEERING.COM

APPROVED BY

CITY ENGINEER — 11.02.16 — DATE

10/24/2016

10/27/2016 10:11:29 AM

© 2016 COPYRIGHT GH2 ARCHITECTS, LLC

PROJECT NO. 147400

TULSA PARKS DEPARTMENT LACY POOL RECONSTRUCTION

SYMBOLS

BUILDING SECTION REFERENCE — X / AXX

PARTITION TYPE SYMBOL — A

WALL / MILLWORK SECTION REFERENCE

ELEVATION OR HEIGHT SYMBOL

ENLARGED FLOOR PLAN OR PLAN DETAIL REFERENCE — x / xxx

KEY NOTE — A

FLOORING TRANSITION — XXX / XXX

ROOM NAME / ROOM NUMBER — ROOM / XXX

DOOR SYMBOL — X

WINDOW SYMBOL — x

STRUCTURAL GRID INDICATORS — A, 1

EQUIPMENT SYMBOL — X

ELEVATION SYMBOL — A / AXXX

LEGEND

- ← → * LINE OF TRAVEL
  - TRAVEL DISTANCE TO EXITS = 250' MAX (IBC 1016.1)
  - COMMON PATH OF TRAVEL = 75' MAX (IBC 1014.3)
  - DEAD ENDS = 50' MAX, FULLY SPRINKLED (IBC 1018.4)
- FE * FIRE EXTINGUISHER 2A WITH SEMI-RECESSED CABINET
  - 75' MAX TRAVEL DISTANCE TO EXTINGUISHER (NFPA 10, 3-2.1)
- *EXIT SIGN
- → LOCATION OF EXIT DISCHARGE (EXIT WIDTH IN INCHES)

CODE ANALYSIS

SUMMARY OF THE PROJECT

THE BUILDING DEPICTED IN THESE CONSTRUCTION DOCUMENTS IS A NEW POOL EQUIPMENT HOUSE WITH OUTDOOR SWIMMING POOL.
*POOL TO BE SUBMITTED UNDER SEPARATE PERMIT TO CITY OF TULSA

APPLICABLE CODES

2015 INTERNATIONAL EXISTING BUILDING CODE (IEBC)
2015 INTERNATIONAL BUILDING CODE (IBC)
2015 INTERNATIONAL PLUMBING CODE (IPC)
2014 NATIONAL ELECTRIC CODE (NEC)
2015 INTERNATIONAL FIRE CODE (IFC)
2015 INTERNATIONAL MECHANICAL CODE (IMC)
2010 ADA ACCESSORY GUIDELINES FOR BUILDINGS AND FACILITIES (ADA)
2009 AMERICAN NATIONAL STANDARDS A117.1
OKLAHOMA STATE DEPARTMENT OF HEALTH PUBLIC BATHING PLACE REGULATIONS (310:315)
TULSA COUNTY HEALTH

USE OR OCCUPANCY

303.1 ASSEMBLY GROUP A-3

TABLE 307.1 MAXIMUM ALLOWABLE QUANTITY PER CONTROL AREA OF HAZARDOUS MATERIALS

OXIDIZER CLASS 3 (CHLORINE)	20 GALLONS/200 LBS (NOTE K.)
CORROSIVE (MURIATIC ACID)	500 LIQUID GALLONS (TABLE 307.1(2))

TABLE 415.6.2 OXIDIZERS: LIQUIDS AND SOLIDS, CLASS 3, 1200 LBS OR LESS A DETACHED BUILDING NOT REQUIRED.

GENERAL BUILDING HEIGHTS AND AREAS

NON-SEPARATED USE GROUPS: A-3: TYPE IIB SPRINKLERED:

502.1

EXISTING BUILDING AREA TO BE DEMOLISHED	721 SF
PORTION OF NEW BUILDING AREA	1,271 SF
TOTAL BUILDING AREA	28,605 SF

TABLE 503 HEIGHT AND AREA LIMITATIONS OF BUILDING:

ALLOWABLE HEIGHT:	3 STORY/75 FEET
ALLOWABLE AREA:	28,500 SF PER STORY

TABLE 506.1 BUILDING AREA MODIFICATION:
Aa = 28,500 + (28,500 X 0.62) + 85,550 = 131,720 SF
Tf = (853/986 - 0.25) X 30/30 = 0.62

TABLE 507.6 GROUP A-3 BUILDINGS OF TYPE II CONSTRUCTION
THE AREA OF A GROUP A-3 BUILDING NO MORE THAN ON STORY ABOVE GRADE PLANE, USED AS A PLACE OF RELIGIOUS WORSHIP, COMMUNITY HALL, DANCE HALL, EXHIBITION HALL, GYMNASIUM, LECTURE HALL, INDOOR SWIMMING POOL OR TENNIS COURT OF TYPE II CONSTRUCTION, SHALL NOT BE LIMITED PROVIDED ALL OF THE FOLLOWING CRITERIA ARE MET:
1. THE BUILDING SHALL NOT HAVE A STAGE OTHER THAN A PLATFORM
2. THE BUILDING SHALL BE EQUIPPED THROUGHOUT WITH AN AUTOMATIC SPRINKLER SYSTEM IN ACCORDANCE WITH SECTION 903.3.1.1.
3. THE BUILDING SHALL BE SURROUNDED AND ADJOINED BY PUBLIC WAYS OR YARDS NOT LESS THAN 60 FEET IN WIDTH

TYPE OF CONSTRUCTION

TABLE 601

STRUCTURAL ELEMENT:	FIRE RESISTANCE RATING:
STRUCTURAL FRAME	0
BEARING WALLS	0
NON BEARING WALLS	0
FLOOR CONSTRUCTION	0
ROOF CONSTRUCTION	0

TABLE 602 FIRE-RESISTANCE RATING REQUIRED FOR EXTERIOR WALLS BASED ON FIRE SEPARATION DISTANCE:

	GROUP A	GROUP S-1
X< 5	1 HOUR	2 HOUR
5 ≤ X < 10	1 HOUR	1 HOUR
10 ≤ X < 30	0 HOUR	0 HOUR
X ≥ 30	0 HOUR	0 HOUR

MEANS OF EGRESS

TABLE 1004.1.2 MAX. FLOOR AREA ALLOWANCES PER OCCUPANT UNIT OF AREA

ACCESSORY STORAGE AREAS, MECHANICAL EQUIPMENT ROOMS	300 GSF / OCCUPANT	1,271 GSF/300 = 4.3 OCCUPANTS
EXISTING LOCKER ROOMS	50 GSF / OCCUPANT	2,011 GSF/50 = 40.2 OCCUPANTS
TOTAL POOL HOUSE OCCUPANT LOAD		45 OCCUPANTS
OUTDOOR POOLS	50 GSF / OCCUPANT	6,000 GSF/50 = 120 OCCUPANTS
OUTDOOR POOL DECKS	15 GSF / OCCUPANT	12,718 GSF/15 = 848 OCCUPANTS
TOTAL OUTDOOR POOL AREA OCCUPANT LOAD		968 OCCUPANTS
OTHER EGRESS WIDTH PER OCCUPANT		0.2 INCHES PER OCCUPANT
1005.1		45 x 0.2 = 9" REQUIRED
		128" PROVIDED
		970 x 0.2 = 194" REQUIRED
		208" PROVIDED

TABLE 1006.3.2 SPACES WITH ONE EXIT OR EXIT ACCESS DOORWAY FOR GROUP A CANNOT EXCEED AN OCCUPANT LOAD OF 49

TABLE 1017.2 EXIT ACCESS TRAVEL DISTANCE: WITH SPRINKLER; 300 FEET

1020.4 DEAD ENDS: 50 FEET MAXIMUM, WITH SPINKLER

TABLE 1006.3.1 MINIMUM NUMBER OF EXITS FOR OCCUPANT LOAD: 2 EXITS (1-500 OCCUPANTS)
MINIMUM NUMBER OF EXITS FOR OUTDOOR POOL AREA: 3 EXITS (501-1000 OCCUPANTS)

1109.2.1 FAMILY OR ASSISTED TOILET AND BATHING ROOMS IS REQUIRED

FIRE AND SMOKE PROTECTION

707 FIRE BARRIERS

TABLE 720.1.(2) RATED FIRE-RESISTANCE PERIODS FOR VARIOUS WALLS AND PARTITIONS
3. CONCRETE MASONRY UNITS 8 INCHES (2 HR)

INTERIOR FINISHES

TABLE 803.11 INTERIOR FINISH REQUIREMENTS: TYPE A-3 (NONSPRINKLERED)

EXIT ENCLOSURES /EXIT PASSAGEWAYS:	CLASS A MATERIALS
CORRIDORS PROVIDING EXIT ACCESS:	CLASS A MATERIALS
ROOMS OR ENCLOSED SPACES:	CLASS C MATERIALS

FIRE PROTECTION SYSTEMS

906 PORTABLE FIRE EXTINGUISHERS PER NFPA 10

TABLE 906.3 FIRE EXTINGUISHER FOR CLASS A FIRE HAZARDS:

MINIMUM RATED SINGLE EXTINGUISHER	2-A
MAX FLOOR AREA PER UNIT OF A	3,000 SF
MAX FLOOR AREA FOR FIRE EXTINGUISHER	11,250 SF
MAX TRAVEL DISTANCE FOR EXTINGUISHER	75 FT

5,579 SF / 3,000 SF = 2 UNITS OF A (2) 2-A

907 MANUAL FIRE ALARM AND DETECTION SYSTEM NOT REQUIRED (LESS THAN 300 OCCUPANT LOAD)

PLUMBING FIXTURE COUNT (POOL)

TABLE 2902.1 MINIMUM NUMBER OF PLUMBING FACILITIES PER FLOOR: (A-3)

FIXTURE TYPE	OK HEALTH DEPARTMENT FACTOR (OAC 310:315)	OK HEALTH DEPARTMENT REQUIRED (OAC 310:315-7-7 372 BATHING CAPACITY)	NUMBER PROVIDED
WATER CLOSETS	MEN 1:100	MEN 2	MEN: 2
	WOMEN 1:50	WOMEN 4	WOMEN: 4
URINALS	MEN 1:100	MEN 3	MEN: 3
LAVATORIES	MEN / WOMEN 1:100	MEN / WOMEN 4	MEN / WOMEN: 4
DRINKING FOUNTAIN	1 PER 500 OCCUPANTS:	2	2
SERVICE SINK		1	1
SHOWERS	MEN / WOMEN 1:40	MEN / WOMEN: 9	MEN / WOMEN: 9
			DECK SHOWERS: 1
FAMILY OR ASSISTED TOILET AND BATHING ROOM (TOILET, LAVATORY AND SHOWER)		1	1

EXISTING KNOX BOX PER CITY OF TULSA REQUIREMENTS AND LOCATION

3109.3 PUBLIC SWIMMING POOLS SHALL BE COMPLETELY ENCLOSED BY A FENCE AT LEAST 4 FEET IN HEIGHT

3109.4.1.5 CHAIN LINK DIMENSIONS. MAXIMUM MESH SIZE FOR CHAIN LINK FENCES SHALL BE 2 1/4 INCH SQUARE.

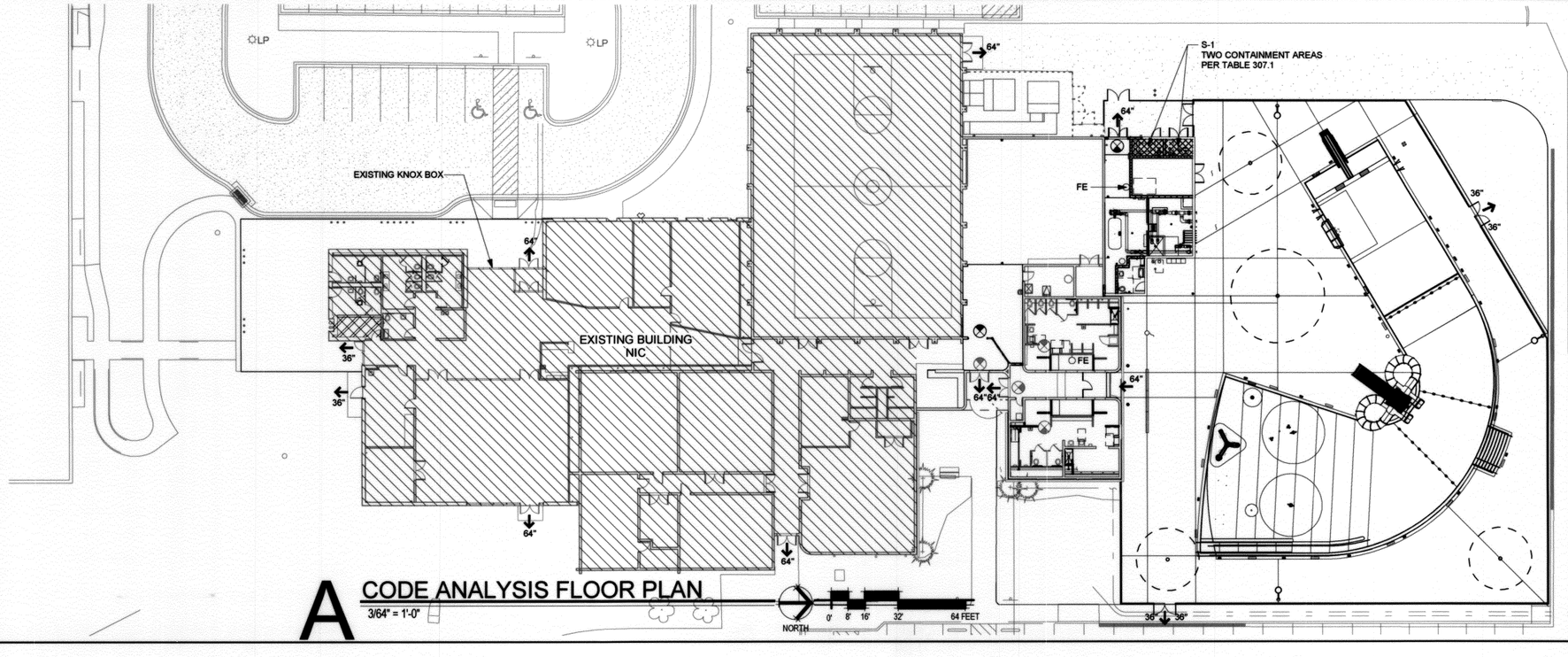

A CODE ANALYSIS FLOOR PLAN
3/64" = 1'-0"

GENERAL NOTES

1. DO NOT SCALE DRAWINGS. NOTIFY ARCHITECT OF ANY DIMENSIONAL DISCREPANCIES FOR CLARIFICATION.
2. DIMENSIONS UNLESS NOTED OTHERWISE: TO FACE OF CONCRETE AND MASONRY; TO CENTERLINE OF COLUMNS OR OTHER GRID POINTS; TO CENTERLINE FRAMED WINDOW AND DOOR OPENINGS; TO FINISH FACE OF CLEAR WIDTHS; TO FINISH FACE OF PARTITIONS

STATE OF OKLAHOMA
MICHAEL RAY HALL
No. 3381
TULSA, OK
LICENSED ARCHITECT
10-24-16

GH2 ARCHITECTS

G001 GENERAL INFORMATION AND CODE ANALYSIS

PROJECT NO. 147400 CONTRACT # 147400

TULSA PARKS DEPARTMENT
LACY POOL RECONSTRUCTION

CITY OF TULSA, OKLAHOMA
ENGINEERING SERVICES DEPARTMENT

PLANS AND ESTIMATES PREPARED BY:
GH2 ARCHITECTS, LLC.

REVISION	BY	DATE

PLAN SCALE: x:1" = ??'
PROFILE SCALE:
HORIZONTAL: x:1" = ??'
VERTICAL x:1" = ?'

DRAWN	NS	10/24/2016
DESIGNED	BT	10/24/2016
SURVEY		
PROJ. MGR.	KF	10/16
LEAD ENGR.		
FIELD MGR.	REH	10/16
RECOMMENDED	HGS	10/31/16
DESIGN MANAGER		

APPROVED:
CITY ENGINEER
DATE: 11.16.16
SHEET 01 OF 74 SHEETS

FILE: DRAWING: G004
ATLAS PAGE NO: 116

© 2016 COPYRIGHT GH2 ARCHITECTS, LLC

10/27/2016 10:11:55 AM

PAY ITEMS

#	DESCRIPTION	PAY ITEM NOTES	UNIT	QTY
001	OWNER'S ALLOWANCE	1	ALLOW	1
002	GENERAL CONDITIONS	2	LOT	1
003	MOBILIZATION	3	EA	1
004	PROJECT SIGN	4	EA	1
005	CONSTRUCTION FENCE	5	LF	744
006	SILT FENCE	6	LF	272
007	TEMPORARY FIBER LOG	7	LF	349
008	TEMPORARY SILT DIKE	7	LF	32
009	CONCRETE WASHOUT PIT	8	EA	1
010	STABILIZED ENTRANCE	9	SY	111
011	STORM WATER POLLUTION PREVENTION PLAN (SWP3)	10	EA	1
012	PAVEMENT SAW CUT	11	LF	402
013	CONCRETE SIDEWALK REMOVAL	12	SY	149
014	ASPHALT PAVEMENT REMOVAL	13	SY	610
015	DEMOLITION - SITE	14	LOT	1
016	DEMOLITION - BUILDING	15	LOT	1
017	DEMOLITION - BUILDING REMODEL AREA	16	LOT	1
018	DEMOLITION - POOL	17	LOT	1
019	DEMOLITION - CURB REMOVAL	82	LF	400
020	DEMOLITION - HANDRAIL REMOVAL	82	LOT	1
021	DEMOLITION - BENCH REMOVAL	82	LOT	1
022	SOILS - HAUL OFF	19	CY	24
023	SOILS - UNCLASSIFIED EXCAVATION/EMBANKMENT	20	CY	1,849
024	SOILS - SELECT FILL UNSATISFACTORY SOILS	21	CY	250
025	SOILS - GENERAL FILL UNSATISFACTORY SOILS	21	CY	50
026	SOILS - TOPSOIL	18	CY	76
027	GRADING	22	SY	311
028	SOD	49	SY	350
029	CONSTRUCTION STAKING	25	EA	1
030	PATCH/REPAIR OF STREET AND CURB (COT STD 731)	23, 33	SY	16
031	BUILDING AND POOL DECK PAD	24	CY	510
032	POOL SLAB PAD	24	CY	483
033	8 FOOT TALL WINYL COATED CHAINLINK FENCE	26	LF	468
034	3'-6" WIDE VINYLCOATED CHAINLINK GATE	27	EA	6
035	CURB RAMP (COT STD 790)	28, 33	EA	2
036	CURB AND GUTTER (COT STD 726)	29, 33	LF	317
037	5 FOOT CONCRETE SIDEWALK	30	SF	872
038	ASPHALT PAVING (COT STD 726)	31	SY	351
039	6"X6"X6" CUT IN TEE WITH SLEEVES	32	EA	1
040	6" PVC WATER LINE	33	LF	93
041	4" DIP WATER LINE	33	LF	65
042	1 1/4" PVC WATER LINE	33	LF	542
043	2" PVC SCH 40 WATER LINE	33	LF	59
044	6" WATER METER AND VAULT (COT STD 529)	33, 34	EA	1
045	6"X6"2" TEE	33	EA	1
046	6"X4" REDUCER	33	EA	1
047	2" PVC 90 DEGREE BEND	33	EA	1
048	4" DIP 90 DEGREE BEND	33	EA	1
049	6" PVC 22.5 DEGREE BEND	33	EA	2
050	6" PVC 45 DEGREE BEND	33	EA	2
051	6" DIP SANITARY SEWER LINE	33	LF	141
052	SEWER TAP	33, 35	EA	1
053	6" SANITARY SEWER BACKWATER VALVE	33	EA	1

PAY ITEMS

#	DESCRIPTION	PAY ITEM NOTES	UNIT	QTY
054	6" DIP WATER LINE	33	LF	21
055	8" HDPE STORM PIPE	33	LF	381
056	6" HDPE STORM PIPE	33	LF	36
057	12" AREA INLET	33, 37	EA	4
058	TRENCH DRAIN	40	LF	60
059	DOWNSPOUT CONNECTION	39	EA	2
060	STORM SEWER CATCH BASIN	33, 37	EA	2
061	4" PERFORATED HDPE WRAPPED IN FABRIC	33, 41	LF	753
062	STORM SEWER CONNECTION TO MANHOLE WITH FLAP GATE (COT STD 405)	33, 36	EA	2
063	8" HDPE 45 DEGREE BEND	33	EA	5
064	8" HDPE 90 DEGREE BEND	33	EA	3
065	8"X8"X8" HDPE TEE	33	EA	5
066	8"X4" REDUCER	33	EA	3
067	POOL - COMPLETE	42, 44	EA	1
068	CONCRETE POOL DECK	43	SF	12,882
069	BUILDING COMPLETE	50	EA	1
070	RELOCATE EXISTING BIKE RACK	47	EA	1
071	PICNIC TABLE AND SEATING , FIXED	45	EA	3
072	DAY LOCKERS	46	LOT	1
073	SIGNAGE - INTERIOR ROOM NAME PLAQUE	48	EA	3
074	SIGNAGE - EXTERIOR ROOM NAME PLAQUE	48	EA	4
075	SIGNAGE - MENS AND WOMENS ENTRY SIGNAGE	48	EA	4
076	SIGNAGE - CONTAINMENT (ACID, CHLORINE, AND POOL EQUIPMENT ROOMS)	48	LOT	1
077	REMODEL - ELECTRICAL	85	SYS	1
078	REMODEL - WOOD BLOCKING	53	LF	20
079	REMODEL - PAINT EXISTING DOOR AND FRAME	53	EA	5
080	REMODEL - PATCH AND REPAIR GYPSUM BOARD CEILING	53	SF	150
081	REMODEL - CONCRETE SLAB	79	CY	16
082	REMODEL - SOFFIT TRIM	53	LF	8
083	REMODEL - PAINT EXISTING STUCCO FASCIA	53	LF	60
084	REMODEL - CLEAN EXISTING CMU WALL	53	SF	100
085	REMODEL - CMU WALLS - 4" SMOOTH FACE	53	SF	450
086	REMODEL - CMU WALLS - 4" SPLIT FACE	53	SF	42
087	REMODEL - STOREFRONT, 1" CLEAR INSULATED GLASS TEMPERED, EXTERIOR	52	SF	8
088	REMODEL - STOREFRONT SYSTEM, 3/8" CLEAR TEMPERED LAMINATED, INTERIOR	52	SF	70
089	REMODEL - STOREFRONT DOOR, ALUMINUM FRAME, DOUBLE, HARDWARE	51	EA	1
090	DOOR HARDWARE - CHAIN LINK GATE	54	EA	4
091	DOOR HARDWARE - CHAIN LINK EGRESS GATE	54	EA	4
092	REMODEL - DOOR HARDWARE - WEATHER STRIP AT EXISTING OVERHEAD DOOR	54	EA	1
093	REMODEL - DOOR HARDWARE - EXISTING SINGLE DOOR	54	EA	2
094	REMODEL - DOOR HARDWARE - EXISTING PAIR OF DOORS	54	EA	1
095	REMODEL - WIRE MESH SECURITY SCREENS AND DOOR	54	LOT	1
096	REMODEL - FLOOR FINISH POLISH CONCRETE	55	SF	130
097	REMODEL - FLOOR FINISH, SEALED CONCRETE	55	SF	300
098	REMODEL - FLOOR FINISH AND BASE, EPOXY	55	SF	1,500
099	REMODEL - FLOOR FINISH, SPORTS FLOOR	55	SF	500
100	REMODEL - WALL FINISH, EPOXY	55	SF	4,650
101	REMODEL - WALL FINISH, PAINT	55	SF	1,500
102	REMODEL - WALL BASE	55	LF	600
103	REMODEL - 5/8" GYPSUM BOARD	56	SF	450
104	REMODEL - 6" METAL STUD FRAMING	57	SF	250
105	REMODEL - BATT INSULATION AND SOUND ATTENUATION	53	SF	250
106	REMODEL - CEILING FINISH, PAINT	55	SF	1,700

PAY ITEMS

#	DESCRIPTION	PAY ITEM NOTES	UNIT	QTY
107	REMODEL - ACOUSTICAL CEILING TILE	53	SF	2,500
108	REMODEL - CEILING GRID	53	SF	550
109	REMODEL - ADA CHANGING BENCHES (CONCRETE)	54	EA	2
110	REMODEL - ACCESS PANEL, GALVANIZED	54	EA	4
111	REMODEL - TOILET STEEL PARTITIONS AND DOORS	54	EA	1
112	REMODEL - TOILET ACCESSORIES	54	LOT	1
113	REMODEL - COUNTERTOP, STAINLESS STEEL	62	LF	18
114	REMODEL - PLUMBING	68	SYS	1
115	REMODEL - MECHANICAL	69	SYS	1
116	REMODEL - WALL OPENING AT EXISTING MASONRY WALL	67	EA	2
117	REMODEL - ELECTRICAL - SALVAGE / RELOCATE LIGHT FIXTURE	54	EA	7
118	REMODEL - ELECTRICAL - RECEPTACLES	80	EA	4
119	REMODEL - ELECTRICAL - 3/4" EMT	81	LF	20
120	FIRE EXTINGUISHER AND MOUNTING ACCESSORIES	53	EA	2
121	SHADE STRUCTURE 30' DIAMETER SINGLE POST (NOT CANVAS)	63	EA	1
122	GUTTER, DOWNSPOUTS AND CONCRETE SPLASH BLOCKS	64	LF	150
123	REPLACEMENT OF ROOF AT TIE-IN	65	SF	50
124	2" EXPANSION JOINT	54	LF	60
125	EXPANSION JOINT COVER	53	LF	60
126	FLASHING/COUNTER FLASHING	53	LF	100
127	FIRE PROTECTION	78	SYS	1
128	POOL SIDE HOSE BIBBS	54	EA	6
129	PSO PRIMARY WIRE INSTALLATION AND TRANSFORMER CONNECTION	70	EA	1
130	REMOVE EXISTING POWER POLE	71	EA	1
131	LIGHT POLE WITH RECEPT, AND LED FIXTURE	53	EA	3
132	LIGHT POLE FOUNDATION	54	EA	3
133	1" PVC CONDUIT TO LIGHTS FOR POWER	53	LF	360
134	WIRING FOR LIGHT POLES WITH RECEPTS	53	LF	400
135	1" SCH 40 PVC CONDUIT TO EXTERIOR LIGHT POLES FOR CAMERAS	53	LF	360
136	2 1/2" BURIED PVC CONDUIT FOR NEW PHONE SERVICE	72	LF	340
137	5" SCH 40 PVC - ELECTRICAL PRIMARY (UNDER GROUND)	53	LF	260
138	5" SCH 40 PVC - ELECTRICAL PRIMARY, SAW CUT/PATCHED IN PAVING	53	LF	50
139	3/4" EMT WITH PULL WIRE	53	LF	150
140	DEMOLITION - SALVAGE SECURITY CAMERA	83	EA	2
141	ADD ALTERNATE A1 - POOL FEATURE - MODULAR CLIMBING STRUCTURE COMPLETE	74	EA	1
142	ADD ALTERNATE A2 - SHADE STRUCTURE 20' DIAMETER SINGLE POST COMPLETE	75	EA	1
143	ADD ALTERNATE A3 - ENTRY CANOPY COMPLETE	76	EA	1
144	ADD ALTERNATE A4 - POOL DECK SHOWER STATION	77	EA	1
145	ADD ALTERNATE A5 - FAMILY CHANGING CANOPY COMPLETE	84	EA	1
146	ADD ALTERNATE A6 - OFFICE 141 MILLWORK	59	EA	1

STATE OF OKLAHOMA
MICHAEL RAY HALL
No. 3381
TULSA, OK
LICENSED ARCHITECT

10-24-16

REVISION	BY	DATE

GH2 ARCHITECTS

G002 PAY ITEM SCHEDULE AND NOTES

PROJECT NO. 147400 CONTRACT # 147400

TULSA PARKS DEPARTMENT
LACY POOL RECONSTRUCTION

CITY OF TULSA, OKLAHOMA
ENGINEERING SERVICES DEPARTMENT

PLANS AND ESTIMATES PREPARED BY:
GH2 ARCHITECTS, LLC.

PLAN SCALE: x:1" = 7'?	DRAWN	NS	10/24/2016	APPROVED:
	DESIGNED	BT	10/24/2016	
	SURVEY			
PROFILE SCALE:	PROJ. MGR.		10/24/16	
HORIZONTAL: x:1" = 7'	LEAD ENGR.			
	FIELD MGR.		10/16	
VERTICAL x:1" = 7'	RECOMMENDED		10/24/16	CITY ENGINEER
	DESIGN MANAGER			
FILE: DRAWING:G001				DATE: 11.4.16
ATLAS PAGE NO: 116				SHEET 02 OF 74 SHEETS

11/10/2016 9:40:43 AM

© 2016 COPYRIGHT GH2 ARCHITECTS, LLC

PAY ITEM NOTES

1. APPROVED BY THE OWNER PRIOR TO USE
2. INCLUDES JOB TRAILER, TEMPORARY FACILITIES AND CONTROLS, CLEANING, SANITARY FACILITIES
3. FOR CONTRACTOR TO MOBILIZE AND DEMOBILIZE ON SITE
4. PROVIDE AND MAINTAIN CITY OF TULSA PROJECT SIGN, STANDARD 102. INSTALL SIGN PRIOR TO ANY CONSTRUCTION ACTIVITIES. REMOVE SIGN UPON COMPLETION OF PROJECT
5. PROVIDE AND MAINTAIN 6 FOOT TALL CHAIN LINK FENCE AS SPECIFIED. REMOVE FENCE UPON COMPLETION OF PROJECT
6. EROSION PROTECTION PLACED AND MAINTAINED TO PREVENT EROSION WASH TO ADJACENT PROPERTY. EROSION PROTECTION SHALL BE REMOVED AT THE END OF THE PROJECT AS DIRECTED BY THE ENGINEER.
7. EROSION PROTECTION PLACED AND MAINTAINED TO PREVENT EROSION WASH TO ADJACENT PROPERTY. EROSION PROTECTION SHALL BE REMOVED AT THE END OF THE PROJECT AS DIRECTED BY THE ENGINEER.
8. INCLUDES ALL MATERIAL AND ACCESSORIES REQUIRED TO INSTALL AND MAINTAIN.
9. COT STD 126
10. DOCUMENTATION AND MANAGEMENT OF STORM WATER POLLUTION PREVENTION PLAN.
11. SAW CUT FULL DEPTH REQUIRED FOR SELECTIVE DEMOLITION
12. REMOVE AND DISPOSE OF CONCRETE SIDEWALK AND AGGREGATE BASE
13. REMOVE AND DISPOSE OF ASPHALT PAVEMENT AND AGGREGATE BASE
14. REMOVE AND DISPOSE OF ALL ITEMS NOTED ON SHEET C300 DEMOLITION PLAN INCLUDING BUT NOT LIMITED TO WATER LINES, EQUIPMENT VAULTS, AND SITE DEBRIS AND/OR OBSTRUCTIONS NOT COVERED BY A SEPARATE PAY ITEM ARE INCLUDED IN THE PRICE BID. ALL EXISTING DRAINAGE STRUCTURES SHALL BE CLEANED OF ALL SEDIMENTATION AND DEBRIS TO THE RIGHT OF WAY. COST OF CLEARING THE TOP 5 INCHES OF SOIL SHALL BE INCLUDED IN THE PRICE BID. INCLUDE TO CAP ABANDONED SANITARY SEWER SERVICE LINE AT MAIN AND FILL WITH FLOWABLE FILL.
15. INCLUDES DISPOSAL AND ALL WORK REQUIRED FOR COMPLETE REMOVAL OF POOL HOUSE STRUCTURE, FOUNDATIONS AND SYSTEMS. REFER TO SHEET D110.
16. REMOVE AND DISPOSE OF ALL WORK SPECIFIED ON THE DRAWINGS AND AS REQUIRED TO INSTALL NEW WORK. REFER TO SHEET D110.
17. INCLUDES DISPOSAL AND ALL WORK REQUIRED FOR COMPLETE REMOVAL OF POOL STRUCTURE, FOUNDATIONS, SYSTEMS, AND ALL ITEMS WITHIN THE AREA OF THE POOL PERIMETER FENCE INCLUDING THE POOL PERIMETER FENCE.
18. PROVIDE TOPSOIL AND FINE GRADE UNDER SOD AT ALL AREAS DISTURBED WITHIN THE WORK AREA.
19. HAUL OFF UNUSED SOILS
20. INCLUDES EXCAVATION BELOW BUILDING TO BOTTOM OF BUILDING PAD AND EXCAVATION BELOW THE POOL TO BOTTOM OF POOL AND POOL DECK PAD. REFER TO SPECIFICATIONS FOR SELECT FILL AND COMPACTION REQUIREMENTS. THE CONTRACTOR SHALL BE PAID FOR UNCLASSIFIED EXCAVATION ON THE BASIS OF ACTUAL QUANTITY. CONTRACTOR SHALL BE RESPONSIBLE FOR PROVIDING ADEQUATE SURVEY TO VERIFY ANY ADDITIONAL QUANTITIES.
21. APPROVED BY OWNER PRIOR TO USE, THIS QUANTITY IS ABOVE THE PLAN QUANTITY FOR UNDERCUTTING OF UNSUITABLE SUBGRADE MATERIAL AND FILL AND COMPACTION OF APPROVED FILL.
22. GRADING TO ACHIEVE SPOT ELEVATIONS AND CONTOURS INDICATED WITHIN CONTRACT DOCUMENTS.
23. COT STD 731
24. INCLUDES FILL AND COMPACTION TO SUBGRADE ELEVATION OF SELECT FILL.
25. INCLUDES LABOR, EQUIPMENT AND MATERIALS NECCESSARY FOR RESTABLISHING SURVEY AND CONTROL AND SETTING REFERENCE HORIZONTAL AND VERTICAL POINTS FOR CONSTRUCTION COMPONENTS
26. INCLUDE FENCING MATERIAL, HARDWARE, CONCRETE FOOTINGS, AND ALL MATERIAL REQUIRED FOR A COMPLETE INSTALLATION
27. INCLUDE GATE, AND ALL MATERIALS REQUIRED FOR A COMPLETE INSTALLATION. EXCEPT FOR ITEMS COVERED BY A SEPERATE PAY ITEM.
28. COT STD 790.
29. COT STD 726.
30. INCLUDES AGGREGATE BASE, FORMING, CONCRETE, REINFORCEMENT, JOINTS, SEALANTS, FINISHING. THE USE OF FLY-ASH IN CONCRETE IS PROHIBITED.
31. COT STD 726 TYPE 4. INCLUDES ASPHALT, AGGREGATE BASE, COMPACTION OF AGGREGATE UP TO 98% AASHTO T180 MODIFIED PROCTOR AND COMPACTED SUBGRADE.
32. CUT IN TEE WITH SLEEVES, COMPLETE AND IN PLACE FOR WATER TAP.
33. COMPLETE AND IN PLACE INCLUDING EXCAVATION AND BACKFILL AND COMPACTION.
34. COT STD 529
35. CONNECTION TO EXISTING MAIN
36. CONNECTION TO EXISTING MANHOLE, COT STD 405
37. NYOPLAST INLET OR APPROVED EQUAL COMPLETE IN PLACE.
38. POLYCAST 600 SERIES WITH DURAGUARD LONGITUDINAL SLOTTED GRATES AND CONCRETE, PER DETAIL 12/C801. 8" HDPE AND PIPE AND FITTINGS SHOWN BELOW TRENCH DRAIN COVERED BY SEPARATE PAY ITEM
39. COMPLETE, IN PLACE. INCLUDE STORM SEWER FROM DOWNSPOUT BOOT TO TRENCH GRATE CONNECTION.
40. COMPLETE, IN PLACE
41. EXCAVATION, PIPE, GEOTEXTILE FABRIC AND #57 STONE BACKFILL INCLUDED.
42. INCLUDES ALL LABOR, EQUIPMENT, MATERIALS REQUIRED FOR A COMPLETE INSTALLATION OF THE POOL STRUCTURE, POOL EQUIPMENT, SIGNAGE, ACCESSORIES, PLAYFEATURES, WATERSLIDE AND POOL SYSTEMS INCLUDING POOL SYSTEMS INSIDE THE ACID ROOM, CHLORINE ROOM AND POOL EQUIPMENT ROOM AND ITEMS NOT COVERED BY A SEPERATE PAY ITEM. PROVIDE ALL CONNECTIONS TO SITE UTILITIES.
43. INCLUDES EXCAVATION, AGGREGATE BASE, FORMING, CONCRETE, REINFORCEMENT, JOINTS, FINISHING FOR CONCRETE POOL DECK
44. ALL ACCESSORIES AND EQUIPMENT FOR POOL SAFETY AND MAINTENANCE.
45. PROVIDE AND INSTALL NEW PICNIC TABLES AND ASSOCIATED PARTS.
46. INCLUDES HOUSE KEEPING PAD AND ALL MATERIAL REQUIRED FOR A COMPLETE INSTALLATION.
47. REMOVE AND REINSTALL WITH TAMPER PROOF FASTENERS.
48. INCLUDES SIGNS, POSTS, FASTENERS, MATERIALS AND ACCESSORIES FOR A COMPLETE INSTALLATION.
49. FINE GRADE AND SOD AREAS DISTURBED BY CONSTRUCTION ACTIVITY. DISTURBED AREAS OUTSIDE OF LIMITS OF CONSTRUCTION AND OWNER DEFINED ACCESS ROUTES SHALL BE REPAIRED AT THE CONTRACTOR'S EXPENSE. WATER, FERTILIZE AND MAINTAIN UNTIL SOD IS ESTABLISHED AND MAINTAIN UNTIL FINAL ACCEPTANCE. SOD TYPE TO MATCH EXISTING ADJACENT.
50. INCLUDES ALL LABOR, EQUIPMENT, MATERIALS REQUIRED FOR A COMPLETE INSTALLATION OF THE NEW BUILDING AND ITS SYSTEMS TO A LINE 5 FEET OUTSIDE THE STRUCTURAL FOOTPRINT OF THE BUILDING. INCLUDES EXCAVATION INTO THE BUILDING PAD FOR FOUNDATIONS, SYSTEM UTILITIES, AND ITEMS NOT COVERED BY A SEPERATE PAY ITEM. PROVIDE ALL CONNECTIONS TO SITE UTILITIES AND . POOL PIPING SYSTEM IS INCLUDED IN PAY ITEM #67.
51. INCLUDES FASTENERS, CONSTRUCTION BLANK LOCKS DURING CONSTRUCTION AND ALL HARDWARE.
52. INCLUDES ALUMINUM FRAMES, GLAZING AND ALL MATERIALS AND ACCESSORIES FOR A COMPLETE INSTALLATION.
53. INCLUDES LABOR, MATERIALS AND ACCESSORIES FOR A COMPLETE INSTALLATION.
54. INCLUDES LABOR, EQUIPMENT, MATERIALS, HARDWARE, AND ACCESSORIES FOR A COMPLETE INSTALLATION.
55. INCLUDES FINISHING AND ALL MATERIALS AND ACCESSORIES FOR A COMPLETE INSTALLATION

PAY ITEM NOTES

56. INCLUDES ALL FASTENERS, TRIM, MUD, TAPE, FINISHING.
57. INCLUDES ALL FASTENERS, TRIM, FINISHING (PER SQUARE FOOT OF WALL SURFACE).
58. INCLUDES ALL MATERIALS AND ACCESSORIES FOR A COMPLETE INSTALLATION.
59. INCLUDES PLASTIC LAMINATE, WOOD SUBSTRATE, BLOCKING AND ALL MATERIALS AND ACCESSORIES FOR A COMPLETE INSTALLATION.
60. INCLUDES ALL FASTENERS, TRIM, HANGERS AND ALL MATERIALS AND ACCESSORIES FOR A COMPLETE INSTALLATION.
61. INCLUDES LABOR, EQUIPMENT, MATERIALS AND ACCESSORIES FOR COMPLETE INSTALLATION.
62. INCLUDES WOOD SUBSTRATE, SUPPORTS, BLOCKING AND ALL MATERIALS AND ACCESSORIES FOR A COMPLETE INSTALLATION.
63. INCLUDES EXCAVATION, CONCRETE FOOTINGS, CONCRETE FINISHING AND SHADE STRUCTURE COMPLETE IN PLACE.
64. INCLUDES STRAPS, FLASHING AND ALL MATERIALS AND ACCESSORIES FOR A COMPLETE INSTALLATION.
65. INCLUDES TEAR OFF OF EXISTING ROOF, REPLACEMENT OF INSULATION, MEMBRANE, FLASHING, EXPANSION FLASHING FASTENERS AND ALL MATERIALS AND ACCESSORIES FOR A COMPLETE INSTALLATION.
66. INCLUDES LABOR, DEMOLITION, EQUIPMENT, MATERIALS AND ACCESSORIES FOR A COMPLETE INSTALLATION
67. INCLUDES SELECTIVE DEMOLITION OF EXISTING MASONRY WALL, MISCELLANEOUS STEEL AND ANCHORAGE MATERIAL, WELDING, AND LABOR FOR EXISTING MATERIALS.
68. INCLUDES ALL LABOR, EQUIPMENT, MATERIALS, REQUIRED FOR A COMPLETE INSTALLATION OF THE PLUMBING SYSTEM NOT INCLUDED WITHIN PAY ITEMS 067 AND 069. INCLUDES EXCAVATION INTO THE BUILDING PAD FOR UTILITIES. PROVIDE ALL CONNECTIONS TO SITE UTILITIES UP TO 5' OUTSIDE OF THE BUILDING.
69. INCLUDES ALL LABOR, EQUIPMENT, MATERIALS, REQUIRED FOR A COMPLETE INSTALLATION OF THE MECHANICAL SYSTEM NOT INCLUDED WITHIN PAY ITEMS 067 AND 069.
70. PRIMARY WIRING, CONNECTIONS TO PSO SERVICE AND COORDINATION AND REQUIREMENTS WITH PSO.
71. REMOVE AND DISPOSE OF EXISTING POWER POLE.
72. RE-FEED CONDUIT ONLY FOR PHONE LINE TO BUILDING. INCLUDES LABOR, EQUIPMENT, MATERIALS AND ACCESSORIES FOR A COMPLETE INSTALLATION, UNDERGROUND CONDUIT WITH FILL AND COMPACTION, AND SURFACE MOUNTED CONDUIT TO BUILDING AND WALL PENETRATION TO BUILDING INTERIOR
73. INCLUDES ALL LABOR, DEMOLITION, EQUIPMENT, MATERIALS, REQUIRED FOR A COMPLETE INSTALLATION OF THE ELECTRICAL SYSTEM. PROVIDE ALL CONNECTIONS TO SITE UTILITIES.
74. INCLUDES LABOR, EQUIPMENT, MATERIALS AND ACCESSORIES FOR A COMPLETE INSTALLATION. REFER TO SPECIFICATION SECTION 13 1100.
75. INCLUDES EXCAVATION, CONCRETE FOOTINGS, CONCRETE FINISHING AND SHADE STRUCTURE FOR COMPLETE INSTALLATION. REFER TO SPECIFICATION SECTION 13 3410.
76. INCLUDES EXCAVATION, FORMWORK, CONCRETE, CONCRETE REINFORCEMENT, ANCHOR BOLTS, COLUMN AND BASE PLATE, STRUCTURAL STEEL FRAMING, STEEL ERECTION, WELDING, STEEL ROOF DECK, PAINT AND FINISH, FLASHING, AND STANDING SEAM METAL ROOF FOR A COMPLETE INSTALLATION.
77. INCLUDES TRENCHING PIPING FOR UNDERGOUND WATER PIPING, SEWER, ASSOCIATED PARTS AND SHOWER FIXTURE.
78. INCLUDES TIE INTO ALARM SYSTEM PANEL AND NEW FIRE ALARM SYSTEM DEVICES FOR NEW AND REMODEL WORK. INCLUDES WET SPRINKLER SYSTEMS MODIFICATIONS IN EXISTING AND NEW SYSTEMS IN NEW BUILDING TO TIE INTO EXISTING SYSTEM.
79. INCLUDES SAWCUT, SELECTIVE DEMOLITION, REMOVAL AND DISPOSAL OF MATERIAL, NEW BASE AGGREGATE, RECOMPACTION OF BASE, NEW VAPOR BARIER, CONCRETE REINFORCEMENT, CONCRETE, CONCRETE FINISHING, SAW CUTS, CURING FOR A COMPLETE INSTALLATION.
80. PROVIDE RECEPTACLES FOR NEW OFFICE DESKTOP IN OFFICE AREA IN EXISTING BUILDING.
81. PROVIDE CONDUIT IN BLOCK WALL AND FLUSH MOUNT BOX 18" ABOVE FLOOR FOR PHONE JACKS IN RELOCATED OFFICE. CONDUIT TO EXTEND 2" ABOVE LAY-IN CEILING.
82. INCLUDES DISPOSAL AND ALL WORK REQUIRED FOR COMPLETE REMOVAL OF DEMOLISHED MATERIALS.
83. SALVAGE EXISTING CAMERAS.
84. EXCAVATION OF BUILDING PAD, FOUNDATIONS, STRUCTURAL STEEL FRAMING, STEEL ERECTION, WELDING, STEEL ROOF DECK, PAINT AND FINISH, WOOD SOFIT SYSTEM, CANOPY LIGHTING, FLASHING, AND SBS MODIFIED BITUMEN ROOF SYSTEM FOR A COMPLETE INSTALLATION. INCLUDES DRY SPRINKLER SYSTEM, MODIFICATIONS AND CONNECTION TO TIE INTO EXISTING WET SPRINKLER SYSTEM.
85. INCLUDES LABOR, EQUIPMENT, MATERIALS AND ACCESSORIES FOR A COMPLETE INSTALL OF THE ELECTRICAL SYSTEM NOT COVERED BY A SEPERATE PAY ITEM. PROVIDE ALL CONNECTIONS TO SITE UTILITIES.

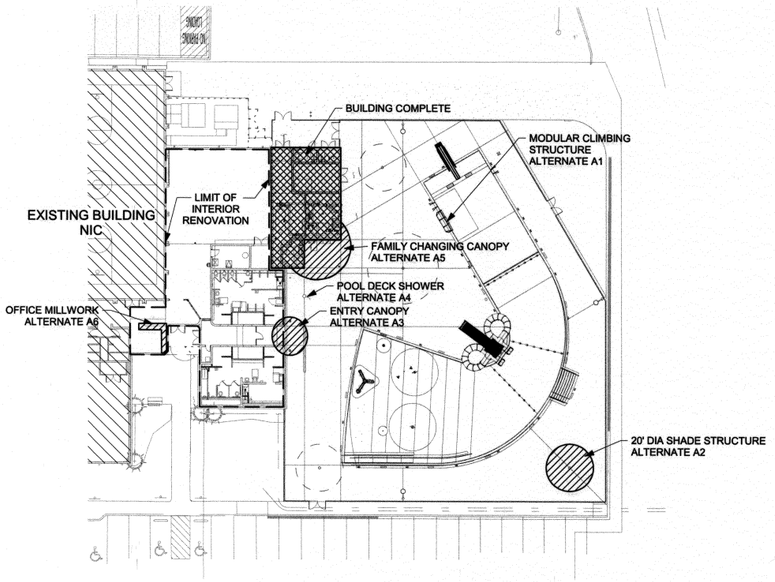

A PAY ITEM KEY PLAN
1/32" = 1'-0"

STATE OF OKLAHOMA
MICHAEL RAY HALL
No. 3381
TULSA
OK
LICENSED ARCHITECT

10-24-16

REVISION	BY	DATE

GH2 ARCHITECTS

G003 PAY ITEM SCHEDULE AND NOTES

PROJECT NO. 147400 CONTRACT # 147400

TULSA PARKS DEPARTMENT
LACY POOL RECONSTRUCTION

CITY OF TULSA, OKLAHOMA
ENGINEERING SERVICES DEPARTMENT

PLANS AND ESTIMATES PREPARED BY:
GH2 ARCHITECTS, LLC.

PLAN SCALE: 1"=?'	DRAWN	NS	10/24/2016	APPROVED:
	DESIGNED	BT	10/24/2016	
	SURVEY			
PROFILE SCALE:	PROJ. MGR.		10/16	
HORIZONTAL: 1"=?'	LEAD ENGR.			
	FIELD MGR.		10/16	
VERTICAL 1"=?	RECOMMENDED:			CITY ENGINEER
	DESIGN MANAGER			
FILE:	DRAWING: Designer			DATE: 11.4.16
ATLAS PAGE NO: 116				SHEET 03 OF 74 SHEETS

© 2016 COPYRIGHT GH2 ARCHITECTS, LLC

11/10/2016 10:45:10 AM

GENERAL:

CONDUCT SITE CLEARING OPERATIONS TO ENSURE MINIMUM INTERFERENCE WITH ROADS,STREETS,WALKS AND OTHER ADJACENT OCCUPIED OR USED FACILITIES. DO NOT CLOSE OR OBSTRUCT STREETS, WALKS, OR OTHER OCCUPIED OR USED FACILITIES WITHOUT PERMISSION FROM AUTHORITIES HAVING JURISDICTION. STREETS AND ROADWAYS SHALL BE THOROUGHLY CLEANED AND/OR SWEPT ON A DAILY BASIS OR MORE FREQUENTLY AS REQUIRED BY THE GOVERNING AUTHORITY. RESTORE DAMAGED IMPROVEMENTS TO ORIGINAL CONDITION AS ACCEPTABLE TO PARTIES HAVING JURISDICTION.

THE CONTRACTOR SHALL PROVIDE DUST CONTROL MEASURES IN ACCORDANCE WITH LOCAL AUTHORITIES.

ALL STREET SURFACES, DRIVEWAYS, CULVERTS, ROADSIDE DRAINAGE DITCHES AND OTHER STRUCTURES THAT ARE DISTURBED OR DAMAGED IN ANY MANNER AS A RESULT OF CONSTRUCTION SHALL BE REPLACED IN ACCORDANCE WITH THE SPECIFICATIONS.

UNLESS SPECIFIED OTHERWISE, ALL MATERIAL AND WORKMANSHIP SHALL BE IN ACCORDANCE WITH THE CITY OF TULSA STANDARDS, TULSA PARKS STANDARDS, OKLAHOMA DEPARTMENT OF ENVIRONMENTAL QUALITY STANDARDS AND/OR THE APPROPRIATE LOCAL AUTHORITIES.

THE CONTRACTOR SHALL BE RESPONSIBLE FOR TRADE PERMITS, TRADE PERMIT FEES, LICENSES, LICENSE FEES, AND TAP FEES, ETC.

ALL ELEVATIONS IN PAVED AREAS ARE TOP OF FINISHED PAVEMENT UNLESS OTHERWISE NOTED.

RELOCATION OF ANY UTILITIES SHALL BE PERFORMED IN ACCORDANCE WITH THE PROVISIONS OF THE APPROPRIATE UTILITY COMPANY AND/OR REGULATORY AGENCY AND/OR TULSA PARKS DEPARTMENT. CONTRACTOR SHALL OBTAIN WRITTEN APPROVAL FROM ENGINEER BEFORE ANY UTILITY RELOCATION.

NO DIMENSION MAY BE SCALED. REFER UNCLEAR ITEMS TO THE ENGINEER FOR INTERPRETATION.

OKIE:

FOR WORK WITHIN RIGHT-OF-WAY AND EASEMENTS, ALL CONTRACTORS SHALL NOTIFY UTILITY COMPANIES AND GOVERNMENT AGENCIES IN WRITING OF THE INTENT TO EXCAVATE NO LESS THAN 72 HOURS PRIOR TO SUCH EXCAVATION (EXCLUSIVE OF SATURDAYS, SUNDAYS AND HOLIDAYS) AND CALL "OKIE" AT 1-800-522-6543. CONTRACTOR SHALL NOTIFY MIKE BATTENFIELD (TULSA PARKS MAINTENANCE MANAGER) AT 918-596-2486 FOR LOCATIONS OF SERVICE LINES AND STRUCTURES ON PARK PROPERTY.

EXISTING UTILITY LOCATIONS SHOWN SHALL BE FIELD VERIFIED BY CONTRACTOR PRIOR TO CONSTRUCTION. LOCATIONS OF UNDERGROUND UTILITIES ON THESE DRAWINGS ARE APPROXIMATE ONLY AND BASED ON ACTUAL FIELD LOCATIONS OF VISIBLE STRUCTURES AND PLAN COMPUTATIONS.

SITE WORK AND GRADING:

ALL FEATURES OF THIS PROJECT INCLUDING, BUT NOT LIMITED TO, SIDEWALKS AND CURB RAMPS SHALL COMPLY WITH THE AMERICAN DISABILITIES ACT (ADA) ACCESSIBILITY GUIDELINES, AND THE INTERIM FINAL RULES FOR PUBLIC RIGHT-OF-WAY, PUBLISHED IN THE FEDERAL REGISTER, SEPTEMBER 2010. WHERE SPATIAL LIMITATIONS OR EXISTING FEATURES WITHIN THE LIMITS OF THE PROJECT PREVENT FULL COMPLIANCE WITH THIS ACT, THE CONTRACTOR SHALL IMMEDIATELY NOTIFY THE ENGINEER UPON DISCOVERY OF SUCH FEATURES. THE CONTRACTOR SHALL NOT PROCEED WITH ANY ASPECT OF THE WORK WHICH IS NOT IN FULL COMPLIANCE WITH THE ADA WITHOUT PRIOR, WRITTEN PERMISSION FROM THE ENGINEER. ANY WORK WHICH IS NOT PERFORMED WITHIN THE GUIDELINES OF THE ADA, FOR WHICH THE CONTRACTOR DOES NOT HAVE WRITTEN APPROVAL, SHALL BE CORRECTED AT THE CONTRACTOR'S EXPENSE.

- CROSS SLOPES FOR SIDEWALKS SHALL NOT EXCEED 1:50
- RAMP SLOPES SHALL NOT EXCEED 1:12
- GRADES EXCEEDING 5% WILL BE TREATED AS A RAMP SLOPE

FINISHED SUBGRADE SURFACE SHALL NOT BE MORE THAN 0.083 FEET ABOVE OR BELOW ESTABLISHED FINISHED SUBGRADE ELEVATIONS AND ALL GROUND SURFACES SHALL VARY UNIFORMLY BETWEEN INDICATED ELEVATIONS. FINISHED DITCHES SHALL BE GRADED TO ALLOW FOR PROPER DRAINAGE WITHOUT PONDING AND IN A MANNER THAT WILL MINIMIZE EROSION.

GEOTECHNICAL:

GEOTECHNICAL REPORTS PREPARED BY AIMRIGHT TESTING & ENGINEERING, DATED 02.19.2015 HAS BEEN PROVIDED FOR THE DESIGN OF THE PROJECT. A COPY MAY BE VIEWED/OBTAINED FROM THE ENGINEER OF RECORD.

SURVEY:

EXISTING TOPOGRAPHY IS BASED ON AN ACTUAL FIELD SURVEY PERFORMED BY CGA ENGINEERS, INC., DATED 8/10/15.

BENCHMARKS:

CP-1 (1/2" REBAR SET W/CAP)	CP-2 (1/2" REBAR SET W/CAP)	CP-3 (1/2" REBAR SET W/CAP)	CP-4 (1/2" REBAR SET W/CAP)	BM-1 (CHISELED BOX SET)
N=437993.546	N=437649.932	N=437512.912	N=438059.757	EL=659.798
E=2564965.030	E=2565025.500	E=2564645.820	E=2564587.009	
EL=665.320	EL=664.714	EL=666.214	EL=661.861	

EROSION CONTROL NOTES:

ALL EROSION CONTROL WORK SHALL BE DONE IN STRICT ACCORDANCE WITH THE EROSION CONTROL PLAN AND CITY OF TULSA STANDARDS AND SPECIFICATIONS.

THE CONTRACTOR SHALL BE RESPONSIBLE FOR PROVIDING A STABILIZED CONSTRUCTION ENTRANCE, AND FOR CLEANING OF VEHICLE WHEELS IN ACCORDANCE WITH THE CITY OF TULSA STANDARDS AND SPECIFICATIONS.

SILT FENCES: PLACEMENT OF SILT FENCES SHALL BE AS SHOWN ON THE DEMOLITION & EROSION CONTROL PLAN. FENCING WHICH BECOMES DAMAGED SHALL BE REPLACED PROMPTLY. DEPOSITS OF SILT WHICH BUILD UP BEHIND DIKES MAY BE DISKED INTO THE SITE BEFORE PLACEMENT OF TEMPORARY COVER. AFTER TEMPORARY COVER IS PLACED OR AFTER LANDSCAPING COMMENCES, SILT SHALL BE REMOVED AND DISPOSED OF IN A MANNER APPROVED BY THE ENGINEER.

TEMPORARY EROSION CONTROL:

ALL DISTURBED EARTH SURFACES WHICH ARE NOT PAVED OR BUILDING PADS SHALL BE LANDSCAPED OR REVEGETATED WITH A TEMPORARY COVER, DEPENDING ON THE PLANTING SEASON, AS OUTLINED BELOW.

PLANT TYPE	PER ACRE	PER 1000 SQ. FT.	PLANTING DATE	DEPTH OF SEEDING
ANNUAL RYEGRASS	40 LBS.	0.9 LBS.	09/05-11/30	¼ INCH
ELBON RYE	2 BU.	3.0 LBS.	08/15-11/30	2 INCH
WHEAT	2 BU.	3.0 LBS.	08/15-11/30	2 INCH
OATS	3 BU.	2.5 LBS.	08/15-11/30	2 INCH
SORGHUMS	60 LBS.	1.4 LBS.	03/01-09/15	2 INCH
SUDAN GRASS	60 LBS.	1.4 LBS.	04/01-09/15	2 INCH

PRIOR TO SEEDING, NEEDED EROSION CONTROL PRACTICES SHALL BE INSTALLED.

THE SUBGRADE SHALL BE LOOSENED EVENLY TO A DEPTH OF 2 TO 3 INCHES AND 10-20-10 FERTILIZER (10 LBS. PER 1000 SQ. FT. OR 450 LBS. PER ACRE) SHALL BE MIXED WITH THE LOOSENED SOIL BY DISKING OR OTHER SUITABLE MEANS.

SOIL SHALL BE TESTED AND LIME TREATED IF REQUIRED BY TESTING FIRM.

SEEDS MAY BE DRILLED OR BROADCAST UNIFORMLY.

SEEDING IMPLEMENTS SHOULD BE USED AT RIGHT ANGLES TO THE SLOPE TO MINIMIZE EROSION.

MULCH SHALL BE USED ON ALL SLOPES GREATER THAN 5 PERCENT OR AS NEEDED.

THE AREA SHALL BE WATERED DAILY OR AS OFTEN AS NECESSARY TO MAINTAIN ADEQUATE SOIL MOISTURE UNTIL THE PLANTS EXCEED 1 INCH IN HEIGHT.

PERMANENT EROSION CONTROL PRACTICES:

REFER TO SOD SPECIFICATION

AS-BUILTS:

THE CONTRACTOR SHALL KEEP ON SITE A CURRENT SET OF THE APPROVED CONSTRUCTION WORKING DRAWINGS AT ALL TIMES. THE CONTRACTOR SHALL MARK (IN RED INK) ALL APPROVED CHANGES INCURRED FOLLOWING ENGINEERING SERVICES DEPARTMENT APPROVAL OF THE INITIAL DRAWINGS. THESE CHANGES MAY BE INITIATED FROM FIELD CONDITIONS OR CHANGES MADE BY THE DESIGN ENGINEER OR THE CITY OF TULSA ENGINEER. EXCEPT FOR MINOR FIELD ADJUSTMENTS, ALL CHANGES SHALL BE REVIEWED AND AGREED TO BY THE DESIGN ENGINEER AND THE CITY OF TULSA ENGINEER PRIOR TO FINAL APPROVAL OF THE PROJECT. THE CONTRACTOR SHALL SUBMIT THE WORKING DRAWINGS TO THE ENGINEER OF RECORD (DESIGN ENGINEER) AFTER FINAL INSPECTION OF PROJECT TO SERVE AS A BASIS FOR DEVELOPMENT OF FINAL AS-BUILT RECORD DRAWINGS.

NOTES

1. ALL CONSTRUCTION TO BE IN STRICT ACCORDANCE WITH CURRENT CITY OF TULSA ENGINEERING SERVICES DEPARTMENT STANDARDS AND SPECIFICATIONS AND TULSA PARKS STANDARDS AND SPECIFICATIONS.
2. ENTIRE PROJECT IS WITHIN CORPORATE LIMITS OF CITY OF TULSA.
3. THIS PROJECT COMPLIES WITH ALL OKLAHOMA DEPARTMENT OF ENVIRONMENTAL QUALITY (ODEQ) REQUIRMENTS.
4. REFERENCE ATLAS PAGE #116 FOR CITY OF TULSA UTILITIES.
5. CONTRACTOR SHALL NOT STORE EQUIPMENT OR MATERIALS IN THE FLOODPLAIN

LEGEND

660	EXISTING MAJOR CONTOUR	BM	BENCH MARK
662	EXISTING MINOR CONTOUR	CO	CLEANOUT
660	NEW MAJOR CONTOUR		DOWN GUY
662	NEW MINOR CONTOUR	FH	FIRE HYDRANT
	FENCE	GM	GAS METER
T	TELEPHONE OVERHEAD		GAS VALVE
	POWER LINE OVERHEAD	LP	LIGHT POLE
G	GAS LINE		POWER POLE
O	OIL LINE	SS	SANITARY MANHOLE
PUG	POWER UNDERGROUND	S	STORM MANHOLE
TUG	TELEPHONE UNDERGROUND	XFMR	TRANSFORMER PAD
TVUG	TV UNDERGROUND		VALVE
W	WATER LINE	WM	WATER METER
SS	SANITARY SEWER LINE	HB	HOSE BIB
	FLOW LINE DITCH		
SF	SILT FENCE		

BC	BOT OF CURB	LF	LINEAR FEET		
CB	CATCH BASIN	OHD	OVERHEAD DOOR		
CI	CAST IRON	PAVT	PAVEMENT		
CLR	CLEAR	PE	POLYETHYLENE		
CJ	CONSTRUCTION JOINT	PVC	POLY VINYL CHLORIDE		
DB	DRAINAGE BASIN	R	RADIUS		
DIP	DUCTILE IRON PIPE	RD	ROOF DRAIN		
DGDI	DOUBLE GRATE CURB INLET	R/W	RIGHT OF WAY		
DO	DOOR OPENING	RCP	REINF CONCRETE PIPE		
EJ	EXPANSION JOINT	RJ	RESTRAINED JOINT		
EL	ELEVATION	SEP	SEMI-ELLIPTICAL PIPE		
FF	FINISH FLOOR	SGDI	SINGLE GRATE CURB INLET		
FG	FINISH GRADE	SF	SQUARE FEET		
FL	FLOWLINE	SJ	SAW JOINT		
GV	GATE VALVE	SSMH	SANITARY SEWER MANHOLE		
HB	HOSE BIB	TC	TOP OF CURB		
HDPE	HIGH DENSITY POLYETHYLENE	TG	TOP OF GRATE		
IRR	IRRIGATION	TOF	TOP OF FOOTING		
IST	INLET SEDIMENT TRAP	TP	TOP OF PAVEMENT		
		TR	TOP OF RIM		
		TS	TOP OF SIDEWALK		
		TW	TOP OF WALL		
		UNO	UNLESS NOTED OTHERWISE		

LIST OF CITY STANDARDS

102	CITY OF TULSA PROJECT SIGN
126	STANDARD SILT FENCE AND CONSTRUCTION ENTRANCE
304	BEDDING DETAIL - RIGID PIPE
305	BEDDING DETAIL - SEMI RIGID PIPE
315	THRUST BLOCK AND TRENCH CONDITIONS
529	6" METER STANDARD AND VAULT ASSEMBLY
726	ASPHALT PAVEMENT STANDARD DETAILS FOR RESIDENTIAL AND COLLECTOR STREETS
730	STANDARD ASPHALT PAVEMENT CUT AND REPAIR
731	STANDARD CONCRETE PAVEMENT CUT AND REPAIR
751	PIPE BEDDING DETAIL FOR STORM SEWER

LIST OF ODOT STANDARDS

TFL-1	TEMPORARY FIBER LOG
TSD-2	TEMPORARY SILT DIKE

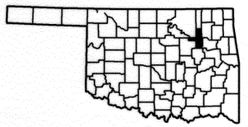

TULSA COUNTY
OKLAHOMA

R 12 E

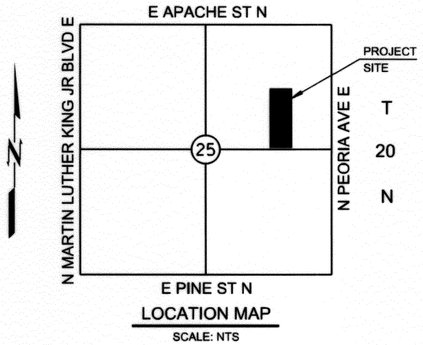

LOCATION MAP

SCALE: NTS

wallace

WALLACE ENGINEERING
STRUCTURAL CONSULTANTS INC.
200 EAST MATHEW BRADY STREET
TULSA,OK 74103
(918) 584-5858
OKLAHOMA CA #1460
EXP DATE 6/30/17

LICENSED PROFESSIONAL ENGINEER
JORDAN RODICH
26548
OKLAHOMA
10/24/2016

BEFORE YOU DIG
1-800-522-OKIE
CALL OKIE

CAUTION

NOTICE TO CONTRACTOR

THE CONTRACTOR IS SPECIFICALLY CAUTIONED THE LOCATION AND ELEVATION OF EXISTING UTILITIES AS SHOWN ON THESE PLANS ARE BASED ON RECORDS OF THE VARIOUS UTILITY COMPANIES AND MEASUREMENTS TAKEN IN THE FIELD. THE INFORMATION IS NOT TO BE RELIED ON AS BEING EXACT OR COMPLETE. THE CONTRACTOR MUST CALL THE LOCAL UTILITY LOCATION CENTER AT LEAST 72 HOURS BEFORE ANY EXCAVATION TO REQUEST EXACT FIELD LOCATIONS OF THE UTILITIES

REVISION	BY	DATE

C100 - GENERAL NOTES

PROJECT NO. 147400 CONTRACT # 147400

TULSA PARKS DEPARTMENT
LACY POOL RECONSTRUCTION

CITY OF TULSA, OKLAHOMA
ENGINEERING SERVICES DEPARTMENT

PLANS AND ESTIMATES PREPARED BY: WALLACE ENGINEERING
STRUCTURAL CONSULTANTS INC.
200 EAST MATHEW BRADY STREET, TULSA, OK 74103

PLAN SCALE: NA	DRAWN	MDE	8/26/16	APPROVED:
	DESIGNED	JR	8/26/16	
	SURVEY			
PROFILE SCALE: NA	PROJ. MGR.			
HORIZONTAL: NA	LEAD ENGR.			
	FIELD MGR.	RBM	10/16	
VERTICAL NA	RECOMMENDED: DESIGN MANAGER	HAS	10/16	CITY ENGINEER
FILE:	DRAWING:			DATE: 11.11.16
ATLAS PAGE NO: 116				SHEET 4 OF 74 SHEETS

10/24/2016 3:25:37 PM \\civil-server\projects\640018 Lacy Pool Reconstruction\Dgn\C0100GenNote.dgn

N. MADISON AVE

CITY OF TULSA FLOODPLAIN

ABANDON IN PLACE EXIST 6" SANITARY SEWER LATERAL

REMOVE ASPHALT DRIVE APPROX 536 SY

REMOVE CONDUIT APPROX 147 LF

REMOVE DIVING BOARDS

REMOVE BACKWASH VAULT

REMOVE WOOD POSTS

REMOVE CHAINLINK FENCE APPROX 242 LF

EXTENT OF CURB REMOVAL
N 437923.74
E 2564672.59

SAW CUT TO FULL DEPTH

EXTENT OF CURB REMOVAL
N 437955.41
E 2564686.88

REMOVE CONC CURB APPROX 43 LF

REMOVE CONC CURB APPROX 56 LF

REMOVE ASPHALT PARKING APPROX 64 SY

REMOVE CONC SIDEWALK APPROX 61 Sy

EXTENT OF CURB REMOVAL
N 437981.03
E 2564730.94

MANHOLE TO REMAIN - REMOVE - VALVE

REMOVE ELEC EQUIPMENT

LIGHT POLE TO REMAIN

EXTENT OF PAVEMENT REMOVAL
N 437963.04
E 2564731.22

REMOVE CONC CURB APPROX 24 LF

REMOVE GUARDRAIL APPROX 48 LF

REMOVE ASPHALT PARKING APPROX 113 SY

SAW CUT TO FULL DEPTH

REMOVE CONC PAVEMENT APPROX 112 SY

REMOVE BENCHES

REMOVE CANOPY AND FOUNDATION

REMOVE SPLASH PAD EQUIPMENT VAULT SALVAGE EQUIPMENT

REMOVE SPLASH PAD AND SALVAGE WATER FEATURES APPROX 270 SY

REMOVE WATER LINE AND CAP AT SIDEWALK APPROX 54 LF

REMOVE WATER LINE X 353 LF

CONC AND FENCE TO REMAIN

REMOVE EXIST 6" SANITARY SEWER LATERAL APPROX 16 LF

REMOVE BUILDING STRUCTURE

REMOVE CONCRETE POOL DECK APPROX 617 SY

REMOVE POOL STRUCTURE

SALVAGE BICK RACK

REMOVE HANDRAILS APPROX 44 LF

REMOVE POWER POLE AND GUY WIRES COORDINATE WITH ALL AFFECTED UTILITIES

REMOVE SOD

EXTENT OF WATER LINE REMOVAL
R / CAP END
N 437789.77
E 2564863.90

EXTENT OF SIDEWALK AND CURB REMOVAL
N 437789.63
E 2564865.90

SAW CUT TO FULL DEPTH

REMOVE CHAINLINK FENCE, APPROX 293 LF

N 437886.75
E 2564860.66

REMOVE CONC SIDEWALK AND CURB APPROX 88 SY

48" RCP ESTIMATED LOCATION

24" RCP TO 48" RCP

BUILDING FF= 663.55

POOL AREA

ASPHALT PARKING LOT

CONCRETE SIDEWALK

TRANSFORMER PAD

CHAINLINK FENCE

CABLE FENCE

GENERAL DEMOLITION NOTES

1. ALL CONCRETE AND ASPHALT SHALL BE SAW CUT FULL DEPTH AND REMOVED OFF SITE UNLESS NOTED OTHERWISE.
2. CONTRACTOR SHALL PROTECT ALL SURVEY CONTROL POINTS.
3. CONTRACTOR SHALL REMOVE ALL WASTE MATERIALS OFF SITE.
4. WITH PRIOR APPROVAL, CONTRACTOR MAY ESTABLISH AN ON-SITE STAGING AREA. CONTRACTOR SHALL BE RESPONSIBLE FOR RESTORING STAGING AREA TO ITS ORIGINAL CONDITION. SECURITY OF STAGING AREA SHALL BE THE RESPONSIBILITY OF THE CONTRACTOR
5. ON-SITE VEGETATION SHALL BE PROTECTED AS NOTED. IN DESIGNATED PROTECTION AREAS WHERE THE CONTRACTOR DOES NOT PROTECT VEGETATION AS NOTED, CONTRACTOR SHALL RESTORE VEGETATION TO EXISTING CONDITION AT NO ADDITIONAL EXPENSE TO THE OWNER, TO THE SATISFACTION OF THE ARCHITECT.
6. CONTRACTOR SHALL NOT STORE EQUIPMENT OR MATERIALS IN THE FLOODPLAIN

20 0 10 20 40 80

1"=20'

LEGEND

- CONC PAVEMENT TO BE REMOVED
- ASPHALT PAVEMENT TO BE REMOVED
- STRUCTURE TO BE REMOVED

BEFORE YOU DIG 1-800-522-OKIE CALL OKIE

CAUTION

NOTICE TO CONTRACTOR

THE CONTRACTOR IS SPECIFICALLY CAUTIONED THE LOCATION AND ELEVATION OF EXISTING UTILITIES AS SHOWN ON THESE PLANS ARE BASED ON RECORDS OF THE VARIOUS UTILITY COMPANIES AND MEASUREMENTS TAKEN IN THE FIELD. THE INFORMATION IS NOT TO BE RELIED ON AS BEING EXACT OR COMPLETE. THE CONTRACTOR MUST CALL THE LOCAL UTILITY LOCATION CENTER AT LEAST 72 HOURS BEFORE ANY EXCAVATION TO REQUEST EXACT FIELD LOCATIONS OF THE UTILITIES

wallace
WALLACE ENGINEERING
STRUCTURAL CONSULTANTS INC.
200 EAST MATHEW BRADY STREET
TULSA, OK 74103
(918) 584-5858
OKLAHOMA CA #1460
EXP DATE 6/30/17

LICENSED PROFESSIONAL ENGINEER JORDAN RODICH 26548 OKLAHOMA
10/24/2016

REVISION	BY	DATE

C300 - DEMOLITION PLAN

PROJECT NO. 147400 CONTRACT # 147400

TULSA PARKS DEPARTMENT
LACY POOL RECONSTRUCTION

CITY OF TULSA, OKLAHOMA
ENGINEERING SERVICES DEPARTMENT

PLANS AND ESTIMATES PREPARED BY: WALLACE ENGINEERING STRUCTURAL CONSULTANTS INC. 200 EAST MATHEW BRADY STREET, TULSA, OK 74103

PLAN SCALE: 1"=20'-0"	DRAWN	MDE	8/26/16
	DESIGNED	JR	8/26/16
	SURVEY		
PROFILE SCALE:	PROJ. MGR.		
HORIZONTAL: NA	LEAD ENGR.		
	FIELD MGR.		10/16
VERTICAL NA	RECOMMENDED DESIGN MANAGER		10/16

APPROVED: CITY ENGINEER

FILE: DRAWING:

DATE: 11.11.16

ATLAS PAGE NO: 116

SHEET 5 OF 74 SHEETS

10/24/2016 3:25:30 PM \\civil-server\projects\640018 Lacy Pool Reconstruction\Dgn\C0300demo.dgn

SILT FENCE
RE: COT STD 126
APPROX 158 LF

TEMPORARY FIBER LOG
RE: ODOT STD TFL-1
APPROX 18 LF

PLACE 20'X50' STABILIZED CONSTRUCTION ENTRANCE - STONE SHALL CONSIST OF 8" MIN ODOT COARSE AGGREGATE NO. 357 ENTRANCE SHALL BE MAINTAINED IN ACCORDANCE WITH CITY OF TULSA STANDARDS
N 437959.48
E 2564677.35
CITY OF TULSA FLOODPLAIN

N 437984.87
E 2564690.22

SILT FENCE
RE: COT STD 126
APPROX 74 LF

N 437985.63
E 2564735.49

LEAK-PROOF CONCRETE WASHOUT PIT/CONTAINER MUST BE LARGE ENOUGH TO PREVENT ANY OVERFLOW
RE: 1/ C301

SILT FENCE
RE: COT STD 126
APPROX 40 LF

TEMPORARY SILT DIKE (TYP)
RE: ODOT STD TSD-2

TSD

TSD

TEMPORARY FIBER LOG
RE: ODOT STD TFL-1
APPROX 331 LF

BUILDING
FF= 663.55

ASPHALT PARKING LOT

CONC MEDIAN

CHAIN LINK FENCE

CONCRETE SIDEWALK

48" RCP ESTIMATED LOCATION

24" RCP TO 48" TO SOUTH

AREA INLET TO=662.63 TO=660.49

SDMH 2137 RIM= 662.85 FL= 651.85

SDMH 2138 RIM= 662.49 FL= 652.19

20 0 10 20 40 80

1"=20'

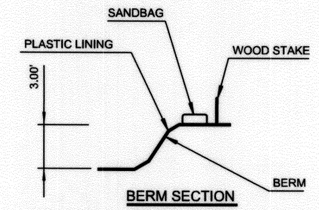

BERM SECTION

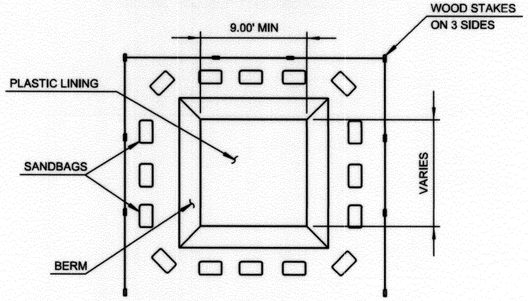

PLAN

1 CONCRETE WASHOUT PIT
SCALE: NTS

BEFORE YOU DIG 1-800-522-OKIE CALL OKIE

CAUTION
NOTICE TO CONTRACTOR

THE CONTRACTOR IS SPECIFICALLY CAUTIONED THE LOCATION AND ELEVATION OF EXISTING UTILITIES AS SHOWN ON THESE PLANS ARE BASED ON RECORDS OF THE VARIOUS UTILITY COMPANIES AND MEASUREMENTS TAKEN IN THE FIELD. THE INFORMATION IS NOT TO BE RELIED ON AS BEING EXACT OR COMPLETE. THE CONTRACTOR MUST CALL THE LOCAL UTILITY LOCATION CENTER AT LEAST 72 HOURS BEFORE ANY EXCAVATION TO REQUEST EXACT FIELD LOCATIONS OF THE UTILITIES

wallace
WALLACE ENGINEERING
STRUCTURAL CONSULTANTS INC.
200 EAST MATHEW BRADY STREET
TULSA,OK 74103
(918) 584-5858
OKLAHOMA CA #1460
EXP DATE 6/30/17

LICENSED PROFESSIONAL ENGINEER JORDAN RODICH 26548 OKLAHOMA
10/24/2016

C301 - EROSION CONTROL PLAN

PROJECT NO. 147400 CONTRACT # 147400

TULSA PARKS DEPARTMENT

LACY POOL RECONSTRUCTION

CITY OF TULSA, OKLAHOMA
ENGINEERING SERVICES DEPARTMENT

PLANS AND ESTIMATES PREPARED BY: WALLACE ENGINEERING STRUCTURAL CONSULTANTS INC. 200 EAST MATHEW BRADY STREET, TULSA, OK 74103

REVISION	BY	DATE

PLAN SCALE: 1"=20'-0"
PROFILE SCALE: NA
HORIZONTAL: NA
VERTICAL: NA

DRAWN	MDE	8/26/16
DESIGNED	JR	8/26/16
SURVEY		
PROJ. MGR.		
LEAD ENGR.		
FIELD MGR.		
RECOMMENDED: DESIGN MANAGER		

APPROVED: CITY ENGINEER

FILE: DRAWING:

DATE:

ATLAS PAGE NO: 116

SHEET 8 OF 74 SHEETS

10/24/2016 3:25:21 PM \\civil-server\projects\640018 Lacy Pool Reconstruction\Dgn\C030Erosion.dgn

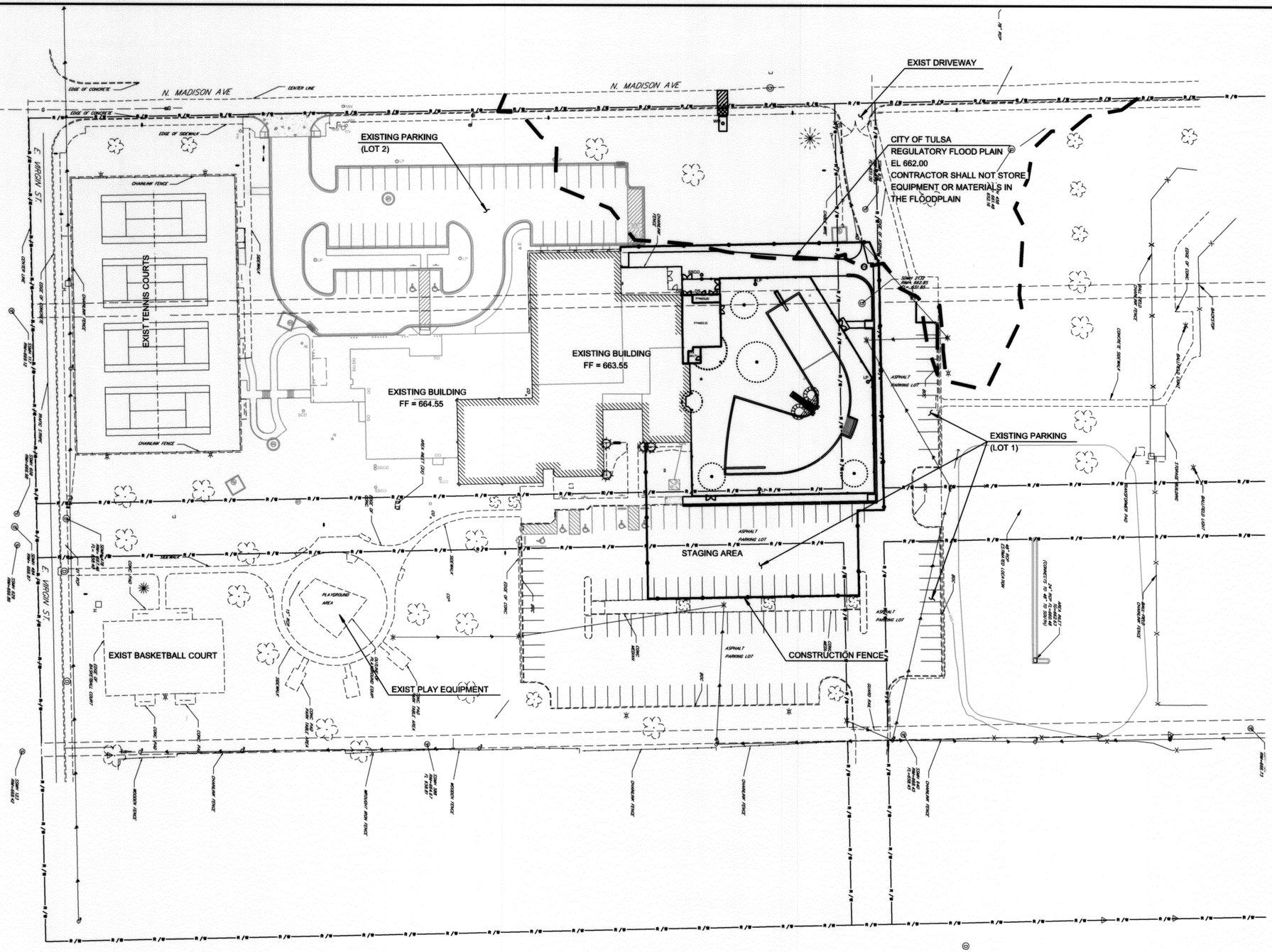

GENERAL SITE NOTES

1. ALL WORK AND MATERIALS SHALL COMPLY WITH ALL MUNICIPAL REGULATIONS AND CODES, WHICHEVER IS MORE STRINGENT.
2. ALL WORK AND MATERIALS SHALL COMPLY WITH O.S.H.A. STANDARDS.
3. REFER TO ARCHITECT SITE PLAN FOR GRASS, TREES AND PLANTED MATERIALS.
4. ALL DIMENSIONS AND COORDINATES ARE FROM BACK OF CURB UNLESS SHOWN OTHERWISE.
5. BUILDING COORDINATES ARE TO OUTSIDE FACE OF WALL.

N

40 0 20 40 80 160

1"=40'

PARKING SUMMARY (LOT 1)

	EXIST	REMOVED	TOTAL
ACCESSIBLE	1	0	1
VAN ACCESSIBLE	4	0	4
STANDARD PARKING	127	-11	116
TOTAL PARKING	132	0	121

IMPERVIOUS AREA CALCULATIONS

TOTAL DISTURBED AREA	29,648 SF
EXISTING IMPERVIOUS	194,697 SF
PROPOSED IMPERVIOUS	194,697 SF
INCREASE IMPERVIOUS	0 SF

wallace
WALLACE ENGINEERING
STRUCTURAL CONSULTANTS INC.
200 EAST MATHEW BRADY STREET
TULSA,OK 74103
(918) 584-5858
OKLAHOMA CA #1460
EXP DATE 6/30/17

LICENSED PROFESSIONAL ENGINEER
JORDAN RODICH
26548
OKLAHOMA
10/24/2016

BEFORE YOU DIG
1-800-522-OKIE
CALL OKIE

CAUTION

NOTICE TO CONTRACTOR

THE CONTRACTOR IS SPECIFICALLY CAUTIONED THE LOCATION AND ELEVATION OF EXISTING UTILITIES AS SHOWN ON THESE PLANS ARE BASED ON RECORDS OF THE VARIOUS UTILITY COMPANIES AND MEASUREMENTS TAKEN IN THE FIELD. THE INFORMATION IS NOT TO BE RELIED ON AS BEING EXACT OR COMPLETE. THE CONTRACTOR MUST CALL THE LOCAL UTILITY LOCATION CENTER AT LEAST 72 HOURS BEFORE ANY EXCAVATION TO REQUEST EXACT FIELD LOCATIONS OF THE UTILITIES

REVISION	BY	DATE

C400- OVERALL SITE PLAN

PROJECT NO. 147400 CONTRACT # 147400

TULSA PARKS DEPARTMENT
LACY POOL RECONSTRUCTION

CITY OF TULSA, OKLAHOMA
ENGINEERING SERVICES DEPARTMENT

PLANS AND ESTIMATES PREPARED BY: WALLACE ENGINEERING
STRUCTURAL CONSULTANTS INC.
200 EAST MATHEW BRADY STREET, TULSA, OK 74103

PLAN SCALE: 1"=4'-0"	DRAWN	MDE	8/26/16	APPROVED:
	DESIGNED	JR	8/26/16	
	SURVEY			
PROFILE SCALE:	PROJ. MGR.			
HORIZONTAL: NA	LEAD ENGR.			
	FIELD MGR.			
VERTICAL NA	RECOMMENDED: DESIGN MANAGER			CITY ENGINEER
FILE:	DRAWING:			DATE:
ATLAS PAGE NO: 116				SHEET 4 OF 74 SHEETS

10/24/2016 3:25:12 PM \\civil-server\projects\164008 Lacy PoolReconstruction\Dgn\C04000verallSite.dgn

N. MADISON AVE

R/W

WM

LP

CITY OF TULSA
FLOODPLAIN

ASPHALT PAVEMENT
x 347 SY
RE: COT STD 726, TYPE 4

SINGLE SWING GATE
RE: 11/C800 & A001

LIGHT POLE
(TYP)

CHAIN FENCE

CABLE WIRE

EDGE OF ASPHALT

SDMH 458
RIM= 661.48
I2= 652.16

SDMH 2132
RIM= 662.85
I2= 651.85

SDMH 2139
RIM= 662.85
I2= 651.00

CO-1

CITY OF TULSA
FLOODPLAIN

N 437912.03
E 2564673.78

N 437911.77
E 2564697.13

N 437922.74
E 2564672.56

CURB TAPER
RE: 7/C800

PAVEMENT TRANSITION
RE: 2/C800

N 437884.33
E 2564697.02

N 437913.87
E 2564714.12

N 437930.09
E 2564711.82

N 437876.05
E 2564708.67

DOUBLE SWING GATE
RE: 11/C800 & A001

SSCO

CB

DS

FF=663.05

N 437963.51
E 2564715.88

6" BARRIER CURB
AND GUTTER (TYP)
X 30 LF
RE: COT STD 726

N 437963.70
E 2564730.54

SHADE STRUCTURE
RE: ARCH, AS101

TRENCH DRAIN
RE: 12/C801

FF=663.55

N 437977.81
E 2564730.32

CURB RAMP (TYPE B)
RE: COT STD 790

SAW CUT JOINT
RE: 6/C800 (TYP)

N 437851.29
E 2564724.00

N 437844.62
E 2564760.52

ISOLATION JOINT
RE: 4/C800

SIDEWALK
RE: 4/C800

SINGLE SWING GATE
RE: 11/C800 & A001

POOL DECK SHOWER
RE: MECH

BUILDING
FF= 663.55

ASPHALT
PARKING LOT

N 437931.09
E 2564772.58

TRENCH DRAIN
RE: 12/C801

ISOLATION JOINT AT
BUILDING FACE (TYP)
RE: 6/C800

ISOLATION JOINT BETWEEN
BACK OF CURB AND POOL DECK
TURNDOWN (TYP)
RE: 6/C800

RELOCATED
BIKE RACK

N 437827.72
E 2564785.40

6" BARRIER CURB
AND GUTTER (TYP)
X 174 LF
RE: COT STD 726

EXPANSION JOINT
RE: 6/C800 (TYP)

POOL
RE: POOL PLANS

SHADE STRUCTURE
RE: ARCH, AS101

N 437811.10
E 2564845.41

N 437820.54
E 2564844.23

N 437917.18
E 2564842.82

SHADE STRUCTURE (TYP)
RE: ARCH, AS101

SINGLE SWING GATE
RE: 11/C800 & A001

CURB RAMP (TYPE B)
RE: COT STD 790

TRANSFORMER PAD

N 437789.62
E 2564865.90

CONC SIDEWALK
X 762 SF
RE: 4/C800

ASPHALT
PARKING LOT

NEW VINYL COATED
CHAIN LINK FENCE
X 468 LF
RE: 10/C800

CURB TERMINATION
RE: 1/C800

N 437927.26
E 2564863.23

ISOLATION JOINT WITH
THICKENED EDGE BETWEEN
POOL DECK AND SIDEWALK (TYP)
RE: 4/C800

BARRIER CURB
AND GUTTER (TYP)
X 143 LF
MATCH EXIST HEIGHT
OF CURB
RE: COT STD 726

CONC POOL DECK
X 1379 SY
RE: 6/C800

48" RCP
ESTIMATED LOCATION

(CONNECTS TO 48" RCP)

24" RCP FL=680.22
10"=662.22

AREA INLET

CONCRETE SIDEWALK

EDGE OF CONC

BOC

GENERAL SITE NOTES

1. ALL WORK AND MATERIALS SHALL COMPLY WITH ALL MUNICIPAL REGULATIONS AND CODES, WHICHEVER IS MORE STRINGENT.
2. ALL WORK AND MATERIALS SHALL COMPLY WITH O.S.H.A. STANDARDS.
3. REFER TO LANDSCAPE PLANS FOR GRASS, TREES AND PLANTED MATERIALS.
4. ALL DIMENSIONS AND COORDINATES ARE FROM BACK OF CURB UNLESS SHOWN OTHERWISE.
5. CONTRACTOR SHALL NOT STORE EQUIPMENT OR MATERIALS IN THE FLOODPLAIN

20 0 10 20 40 80

1"=20'

LEGEND

- ASPHALT PAVEMENT
- POOL DECK
- FENCE

CAUTION

NOTICE TO CONTRACTOR

THE CONTRACTOR IS SPECIFICALLY CAUTIONED THE LOCATION AND ELEVATION OF EXISTING UTILITIES AS SHOWN ON THESE PLANS ARE BASED ON RECORDS OF THE VARIOUS UTILITY COMPANIES AND MEASUREMENTS TAKEN IN THE FIELD. THE INFORMATION IS NOT TO BE RELIED ON AS BEING EXACT OR COMPLETE. THE CONTRACTOR MUST CALL THE LOCAL UTILITY LOCATION CENTER AT LEAST 72 HOURS BEFORE ANY EXCAVATION TO REQUEST EXACT FIELD LOCATIONS OF THE UTILITIES

BEFORE YOU DIG 1-800-522-OKIE CALL OKIE

wallace
WALLACE ENGINEERING
STRUCTURAL CONSULTANTS INC.
200 EAST MATHEW BRADY STREET
TULSA,OK 74103
(918) 584-5858
OKLAHOMA CA #1460
EXP DATE 6/30/17

LICENSED PROFESSIONAL ENGINEER
JORDAN RODICH
25548
OKLAHOMA
10/24/2016

C401 - SITE PLAN

PROJECT NO. 147400 CONTRACT # 147400

TULSA PARKS DEPARTMENT
LACY POOL RECONSTRUCTION

CITY OF TULSA, OKLAHOMA
ENGINEERING SERVICES DEPARTMENT

PLANS AND ESTIMATES PREPARED BY: WALLACE ENGINEERING
STRUCTURAL CONSULTANTS INC.
200 EAST MATHEW BRADY STREET, TULSA, OK 74103

REVISION	BY	DATE

PLAN SCALE: 1"=20'-0"	DRAWN	MDE	8/26/16	APPROVED:
	DESIGNED	JR	8/26/16	
	SURVEY			
PROFILE SCALE:	PROJ. MGR.	RBH	10/16	
HORIZONTAL: NA	LEAD ENGR.			
	FIELD MGR.	RBH	10/16	
VERTICAL NA	RECOMMENDED DESIGN MANAGER	HAS	10/16	CITY ENGINEER
FILE:	DRAWING:			DATE: 10/11/16
ATLAS PAGE NO: 116				SHEET 8 OF 74 SHEETS

10/24/2016 3:25:04 PM \\civil-server\projects\640018 Lacy Pool Reconstruction\Dgn\C040Site.dgn

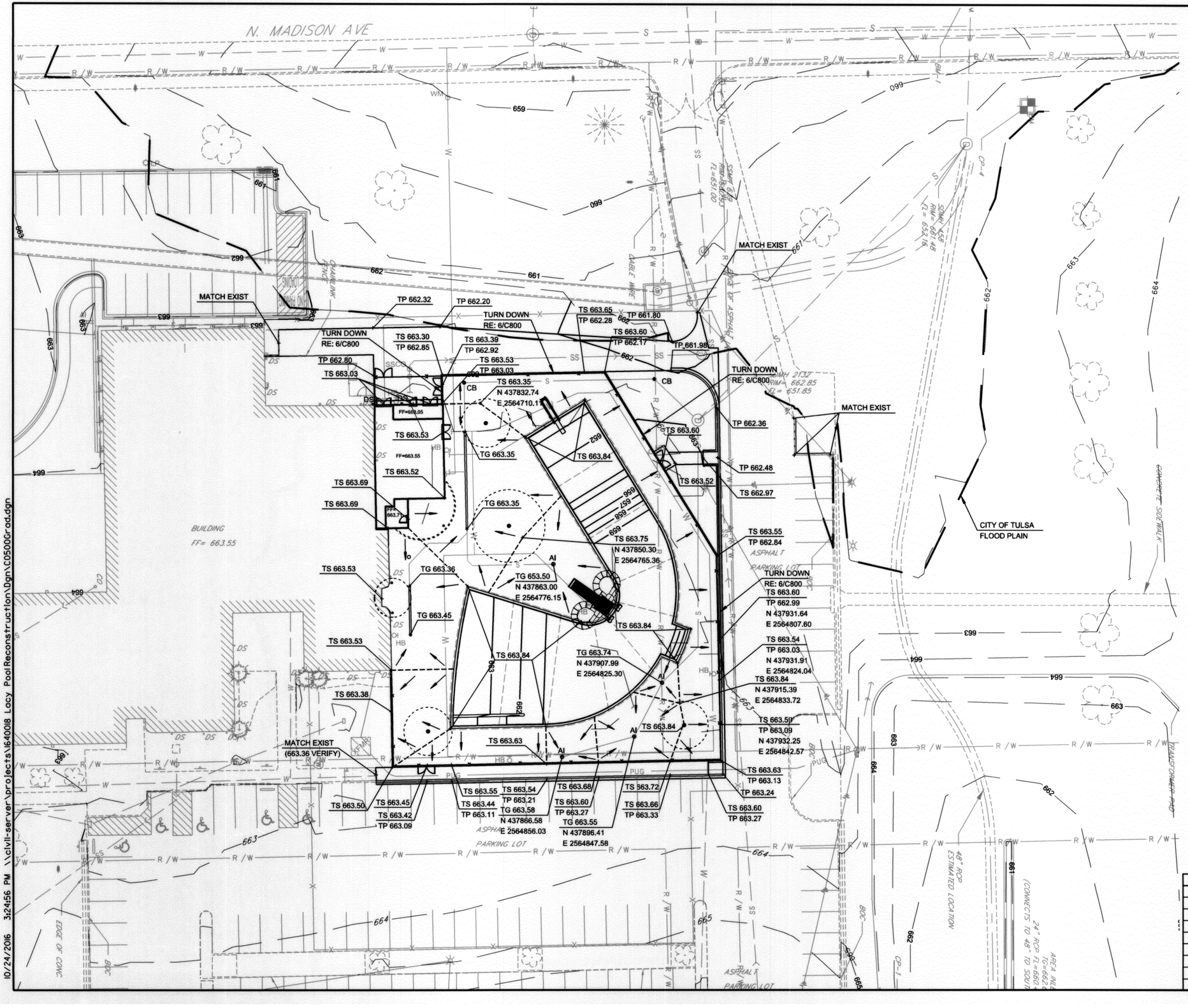

GENERAL GRADING NOTES

1. SITE GRADING SHALL NOT PROCEED UNTIL EROSION CONTROL MEASURES HAVE BEEN INSTALLED & INSPECTED AND APPROVED BY LOCAL AUTHORITIES.
2. ALL CUT OR FILL SLOPES SHALL BE 4:1 OR FLATTER UNLESS OTHERWISE NOTED.
3. IF ANY EXISTING STRUCTURES TO REMAIN ARE DAMAGED DURING CONSTRUCTION IT SHALL BE THE CONTRACTORS RESPONSIBILITY TO REPAIR OR REPLACE THE EXISTING STRUCTURE AT NO COST TO THE OWNER.
4. ALL STORM PIPE ENTERING STRUCTURES SHALL BE GROUTED TO ENSURE CONNECTION AT STRUCTURE IS WATER TIGHT.
5. CONTRACTOR SHALL ENSURE POSITIVE DRAINAGE AWAY FROM BUILDINGS AND STRUCTURES FOR ALL GRASSED AND PAVED AREAS.
6. CONSTRUCTION SHALL COMPLY WITH ALL APPLICABLE GOVERNING CODES AND BE CONSTRUCTED TO THE SAME.
7. CONTRACTOR SHALL MAINTAIN POSITIVE DRAINAGE OF ENTIRE SITE THROUGHOUT CONSTRUCTION AND AVOID PONDING OR RUTTING. TEMPORARY DEWATERING, INCLUDING PUMPING, MAY BE REQUIRED AND SHALL BE INCLUDED IN THE SCOPE OF WORK.
8. SIDEWALKS SHALL HAVE MAX 2% CROSS SLOPE.
9. POOL DECK MAX. SLOPE 2%.

20 0 10 20 40 80

1"=20'

LEGEND

- STANDARD CURB AND GUTTER
- FALL AWAY (REVERSE) CURB AND GUTTER RE: 3/C800
- BREAKLINE
- FLOW ARROWS

CAUTION

NOTICE TO CONTRACTOR

THE CONTRACTOR IS SPECIFICALLY CAUTIONED THE LOCATION AND ELEVATION OF EXISTING UTILITIES AS SHOWN ON THESE PLANS ARE BASED ON RECORDS OF THE VARIOUS UTILITY COMPANIES AND MEASUREMENTS TAKEN IN THE FIELD. THE INFORMATION IS NOT TO BE RELIED ON AS BEING EXACT OR COMPLETE. THE CONTRACTOR MUST CALL THE LOCAL UTILITY LOCATION CENTER AT LEAST 72 HOURS BEFORE ANY EXCAVATION TO REQUEST EXACT FIELD LOCATIONS OF THE UTILITIES

BEFORE YOU DIG 1-800-522-OKIE CALL OKIE

wallace
WALLACE ENGINEERING
STRUCTURAL CONSULTANTS INC.
200 EAST MATHEW BRADY STREET
TULSA,OK 74103
(918) 584-5858
OKLAHOMA CA #1460
EXP DATE 6/30/17

LICENSED PROFESSIONAL ENGINEER JORDAN RODICH 26548 OKLAHOMA 10/24/2016

REVISION	BY	DATE

C500 - GRADING PLAN

PROJECT NO. 147400 CONTRACT # 147400

TULSA PARKS DEPARTMENT

LACY POOL RECONSTRUCTION

CITY OF TULSA, OKLAHOMA

ENGINEERING SERVICES DEPARTMENT

PLANS AND ESTIMATES PREPARED BY: WALLACE ENGINEERING STRUCTURAL CONSULTANTS INC. 200 EAST MATHEW BRADY STREET, TULSA, OK 74103

PLAN SCALE: 1"=20'-0"	DRAWN	MDE	8/26/16	APPROVED:
	DESIGNED	JR	8/26/16	
	SURVEY			
PROFILE SCALE:	PROJ. MGR.		10/16	
HORIZONTAL: NA	LEAD ENGR.			
	FIELD MGR.		10/16	
VERTICAL NA	RECOMMENDED:		10/16	
	DESIGN MANAGER			CITY ENGINEER
FILE:	DRAWING:			DATE: 11.11.16
ATLAS PAGE NO: 116				SHEET 9 OF 74 SHEETS

10/24/2016 3:24:56 PM \\civil-server\projects\640018 Lacy Pool Reconstruction\Dgn\C0500Grad.dgn

INLET DESIGN TABLE (RATIONAL METHOD)

DRAINAGE AREA BASIN	INLET NO.	DRAINAGE AREA (SF)	DRAINAGE AREA (ACRES)	PAVED AREA (SF)	GRASS AREA (SF)	"C" FACTOR	OVERLAND REACH (FEET)	OVERLAND SLOPE (%)	OVERLAND VELOCITY (FPS)	SHALLOW CHANNELIZED REACH (FEET)	SHALLOW CHANNELIZED SLOPE (%)	SHALLOW CHANNELIZED VELOCITY (FPS)	INITIAL TIME OF CONCENTRATION Ti (MIN)	CHANNELIZED TIME OF CONCENTRATION Tt (MIN)	TOTAL Tc (MIN) (10 MIN. MAX)	I 100 (IN/HR)	Q 100 (CFS)	Q 100 CARRYOVER (CFS)	SUM Q 100 AT INLET (CFS)	D 100 INLET (FEET)	MAX DEPTH AT INLET (FEET)	SPREAD AT INLET (FT)	INLET MAX CAPACITY (CFS)	BYPASS TARGET STRUCTURE NO.	CLOGGING FACTOR	% CROSS SLOPE AT INLET	% SLOPE AT INLET	INLET DESIGN
A	A	1,434	0.033	1,434	-	0.90	22.96	0.01	2.10	-	-	-	0.18	-	0.18	11.91	0.35	-	0.35	0.14	0.16	7.22	0.68	-	0.50	2.00	sump	Area Drain Round 12"
B	B	73,978	1.698	47,000	26,978	0.70	149.00	0.03	1.22	365.00	0.02	2.48	2.04	2.45	4.49	10.62	12.61	-	12.61	0.84	0.50	34.91	13.19	-	0.70	2.40	sump	Exist Inlet
C	C	5,392	0.124	3,870	1,522	0.74	51.20	0.02	3.00	-	-	-	0.28	-	0.28	11.88	1.10	-	1.10	0.19	0.50	17.41	2.55	-	0.50	1.10	sump	Exist Inlet
D	D	2,705	0.062	2,705	-	0.90	24.82	0.02	3.30	-	-	-	0.13	-	0.13	11.91	0.67	-	0.67	0.05	0.15	3.61	4.77	-	0.50	1.00	sump	Trench Drain 32 lf
E	E	2,492	0.057	2,492	-	0.90	38.45	0.01	1.90	-	-	-	0.34	-	0.34	11.85	0.61	-	0.61	0.04	0.15	2.20	5.96	-	0.50	2.00	sump	Trench Drain 40 lf
F	F	1,530	0.035	1,530	-	0.90	29.65	0.01	1.90	-	-	-	0.26	-	0.26	11.88	0.38	-	0.38	0.15	0.16	7.52	0.39	-	0.50	2.00	sump	Area Drain Round 12"

CITY OF TULSA
REGULATORY FLOOD PLAIN
EL 662.00
CONTRACTOR SHALL NOT STORE EQUIPMENT OR MATERIALS IN THE FLOODPLAIN

30 0 15 30 60 120

1"=30'

LEGEND

- DRAINAGE AREA BOUNDARY
- FLOW PATH
- CATCHMENT AREA (B)
- STORM STRUCTURE (B)

CAUTION

NOTICE TO CONTRACTOR

THE CONTRACTOR IS SPECIFICALLY CAUTIONED THE LOCATION AND ELEVATION OF EXISTING UTILITIES AS SHOWN ON THESE PLANS ARE BASED ON RECORDS OF THE VARIOUS UTILITY COMPANIES AND MEASUREMENTS TAKEN IN THE FIELD. THE INFORMATION IS NOT TO BE RELIED ON AS BEING EXACT OR COMPLETE. THE CONTRACTOR MUST CALL THE LOCAL UTILITY LOCATION CENTER AT LEAST 72 HOURS BEFORE ANY EXCAVATION TO REQUEST EXACT FIELD LOCATIONS OF THE UTILITIES

BEFORE YOU DIG 1-800-522-OKIE CALL OKIE

wallace
WALLACE ENGINEERING
STRUCTURAL CONSULTANTS INC.
200 EAST MATHEW BRADY STREET
TULSA,OK 74103
(918) 584-5858
OKLAHOMA CA #1460
EXP DATE 6/30/17

LICENSED PROFESSIONAL ENGINEER JORDAN RODICH 26548 OKLAHOMA 10/24/2016

C501 - DRAINAGE AREA MAP

PROJECT NO. 147400 CONTRACT # 147400

TULSA PARKS DEPARTMENT
LACY POOL RECONSTRUCTION

CITY OF TULSA, OKLAHOMA
ENGINEERING SERVICES DEPARTMENT

PLANS AND ESTIMATES PREPARED BY: WALLACE ENGINEERING STRUCTURAL CONSULTANTS INC. 200 EAST MATHEW BRADY STREET, TULSA, OK 74103

REVISION	BY	DATE

PLAN SCALE: 1"=20'-0"
PROFILE SCALE:
HORIZONTAL: NA
VERTICAL: NA

DRAWN	MDE	8/26/16	APPROVED:
DESIGNED	JR	8/26/16	
SURVEY			
PROJ. MGR.		10/16	
LEAD ENGR.			
FIELD MGR.		10/16	
RECOMMENDED: DESIGN MANAGER	HAS	10/16	CITY ENGINEER

FILE: DRAWING:
DATE: 10.10.16
ATLAS PAGE NO: 116
SHEET 16 OF 74 SHEETS

10/24/2016 3:24:45 PM \\civil-server\projects\164008 Lacy Pool Reconstruction\Dgn\C050lDrainage.dgn

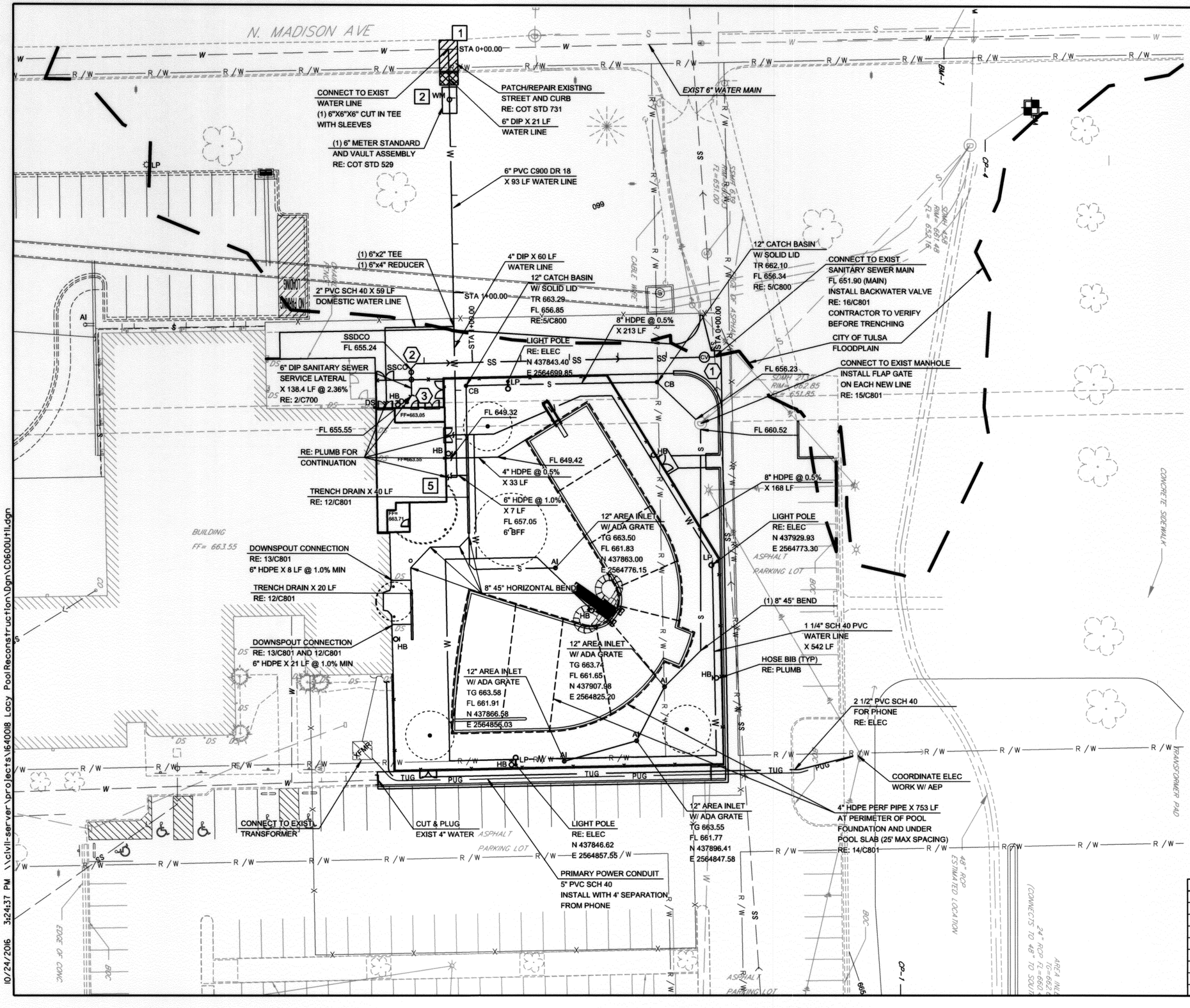

GENERAL UTILITY NOTES:

1. PRIOR TO CONSTRUCTION, LOCATION OF SITE UTILITIES SHALL BE VERIFIED BY CONTRACTOR WITH THE PROPER UTILITY COMPANY PROVIDING SERVICE.
2. CONTRACTOR SHALL NOTIFY THE UTILITY AUTHORITIES' INSPECTORS BEFORE CONNECTING TO ANY EXISTING LINE IN ACCORDANCE WITH LOCAL REQUIREMENTS.
3. RESTRAINED JOINTS SHALL BE PROVIDED ON 4" AND LARGER WATER LINES AT ALL BENDS TEES AND FIRE HYDRANTS FOR A MINIMUM 2 JOINTS BOTH SIDES OF FITTING PER AWWA MINIMUM STANDARDS.
4. TERMINATE SERVICE PIPING 5' FROM BUILDING WALL UNTIL BUILDING PIPING SYSTEMS ARE INSTALLED. TERMINATE PIPING WITH VALVE AND CAP PLUG OR FLANGE AS REQUIRED FOR PIPING MATERIAL.
5. ALL TRENCHING, PIPE LAYING AND BACKFILLING SHALL BE IN ACCORDANCE WITH FEDERAL OSHA REGULATIONS.
6. REFER TO PLUMBING AND/OR POOL CONSULTANT SHEETS FOR UTILITY LINE LEAD-IN LOCATION AND DETAIL.
7. ALL PIPING SHALL BE INSTALLED WITH A MINIMUM OF 30" OF COVER, UNLESS NOTED OTHERWISE.
8. CONTRACTOR IS RESPONSIBLE FOR COMPLYING WITH THE SPECIFICATIONS OF THE LOCAL AUTHORITIES REGARDING TO MATERIALS AND INSTALLATION OF THE WATER AND SEWER LINES.
9. CONTRACTOR IS TO COORDINATE WITH ALL UTILITY COMPANIES FOR INSTALLATION REQUIREMENTS AND SPECIFICATIONS.
10. TRENCH RIGID PIPE, RE: COT STDS 304 & 315
    TRENCH SEMI RIGID PIPE, RE: COT STDS 305 & 315
    TRENCH STORM PIPE, RE: COT STD 751 & 315
12. REFER TO PLUMB FOR CONTINUATION OF UTILITIES AT BUILDING.

20 0 10 20 40 80

1"=20'

CAUTION

NOTICE TO CONTRACTOR

THE CONTRACTOR IS SPECIFICALLY CAUTIONED THE LOCATION AND ELEVATION OF EXISTING UTILITIES AS SHOWN ON THESE PLANS ARE BASED ON RECORDS OF THE VARIOUS UTILITY COMPANIES AND MEASUREMENTS TAKEN IN THE FIELD. THE INFORMATION IS NOT TO BE RELIED ON AS BEING EXACT OR COMPLETE. THE CONTRACTOR MUST CALL THE LOCAL UTILITY LOCATION CENTER AT LEAST 72 HOURS BEFORE ANY EXCAVATION TO REQUEST EXACT FIELD LOCATIONS OF THE UTILITIES

BEFORE YOU DIG 1-800-522-OKIE CALL OKIE

wallace
WALLACE ENGINEERING
STRUCTURAL CONSULTANTS INC.
200 EAST MATHEW BRADY STREET
TULSA,OK 74103
(918) 584-5858
OKLAHOMA CA #1460
EXP DATE 6/30/17

LICENSED PROFESSIONAL ENGINEER JORDAN RODICH 26548 OKLAHOMA 10/24/2016

REVISION	BY	DATE

C600 - UTILITY PLAN

PROJECT NO. 147400 CONTRACT # 147400

TULSA PARKS DEPARTMENT
LACY POOL RECONSTRUCTION

CITY OF TULSA, OKLAHOMA
ENGINEERING SERVICES DEPARTMENT

PLANS AND ESTIMATES PREPARED BY: WALLACE ENGINEERING STRUCTURAL CONSULTANTS INC. 200 EAST MATHEW BRADY STREET, TULSA, OK 74103

PLAN SCALE: 1"=20'-0"	DRAWN	MDE	8/26/16	APPROVED:
	DESIGNED	JR	8/26/16	
	SURVEY			
PROFILE SCALE:	PROJ. MGR.		10/16	
HORIZONTAL: NA	LEAD ENGR.			
	FIELD MGR.		10/16	
VERTICAL NA	RECOMMENDED DESIGN MANAGER	HAS	10/16	CITY ENGINEER
FILE:	DRAWING:			DATE: 11.11.16
ATLAS PAGE NO: 116				SHEET 11 OF 74 SHEETS

10/24/2016 3:24:37 PM \\civil-server\projects\640008 Lacy Pool Reconstruction\Dgn\C0600Util.dgn

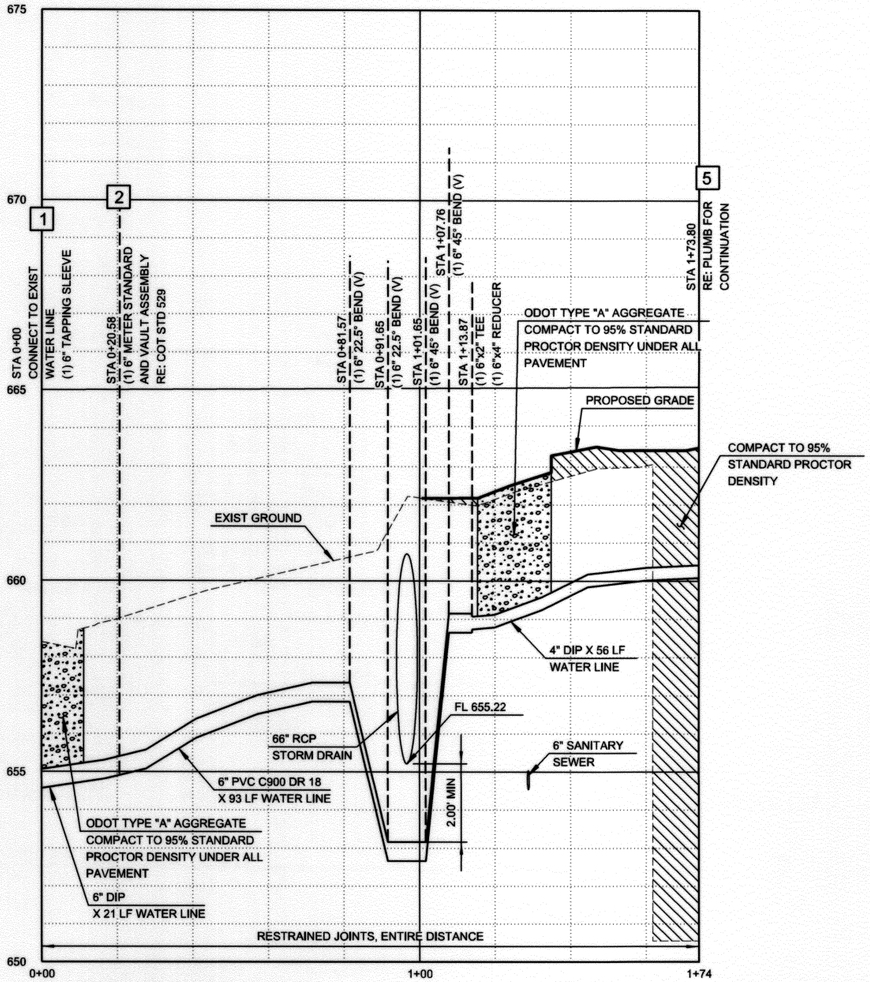

1 WATER LINE PROFILE

SCALE: HORIZ 1"=20'
VERT 1"=2'

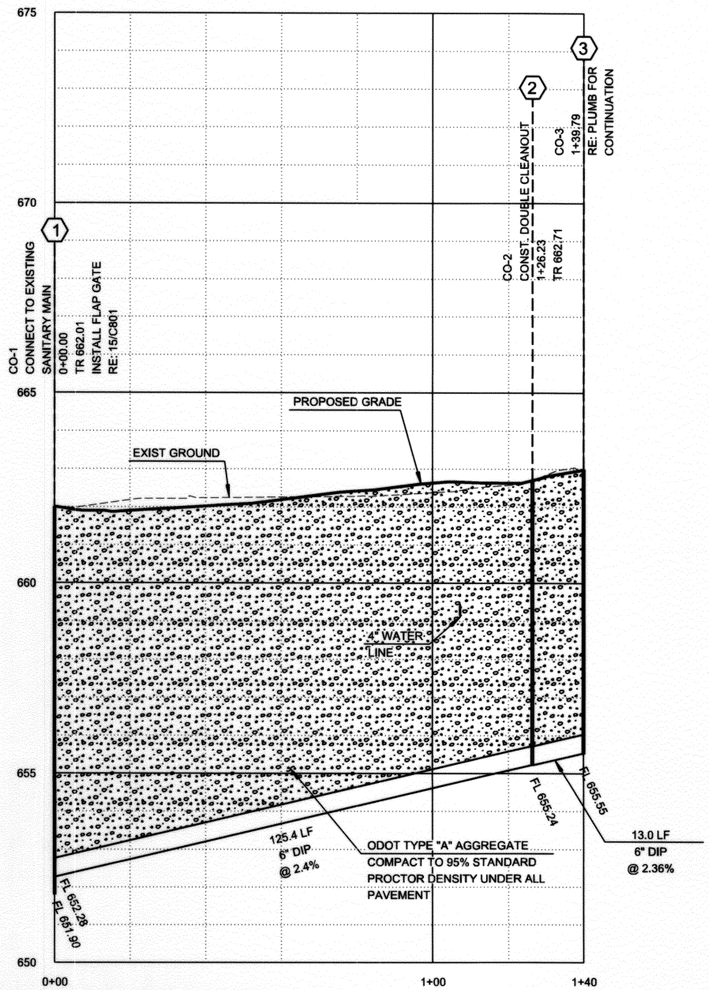

2 SEWER SERVICE PROFILE

SCALE: HORIZ 1"=20'
VERT 1"=2'

wallace
WALLACE ENGINEERING
STRUCTURAL CONSULTANTS INC.
200 EAST MATHEW BRADY STREET
TULSA,OK 74103
(918) 584-5858
OKLAHOMA CA #1460
EXP DATE 6/30/17

LICENSED PROFESSIONAL ENGINEER
JORDAN RODICH
26548
OKLAHOMA
10/24/2016

C700 - UTILITY PROFILES

PROJECT NO. 147400 CONTRACT # 147400

TULSA PARKS DEPARTMENT
LACY POOL RECONSTRUCTION

CITY OF TULSA, OKLAHOMA
ENGINEERING SERVICES DEPARTMENT

PLANS AND ESTIMATES PREPARED BY: WALLACE ENGINEERING
STRUCTURAL CONSULTANTS INC.
200 EAST MATHEW BRADY STREET, TULSA, OK 74103

REVISION	BY	DATE

PLAN SCALE: N.A.	DRAWN	MDE	8/26/16
	DESIGNED	JR	8/26/16
	SURVEY		
PROFILE SCALE:	PROJ. MGR.		10/16
HORIZONTAL: 1" = 20'	LEAD ENGR.		
	FIELD MGR.		10/16
VERTICAL 1" = 2'	RECOMMENDED DESIGN MANAGER	HAS	10/16

APPROVED: CITY ENGINEER

FILE: DRAWING:

DATE: 10.11.16

ATLAS PAGE NO: 116

SHEET 12 OF 74 SHEETS

10/24/2016 3:24:29 PM \\civil-server\projects\640018 Lacy Pool Reconstruction\Dgn\C0700PP.dgn

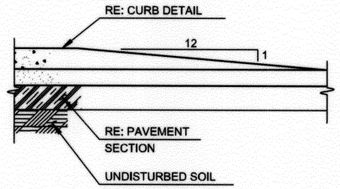

1 CURB TERMINATION
SCALE: NTS

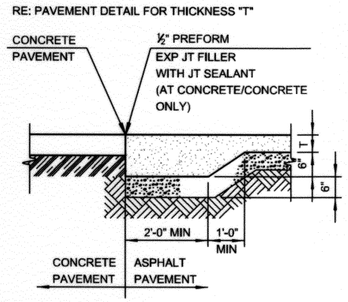

2 PAVEMENT TRANSITION
SCALE: NTS

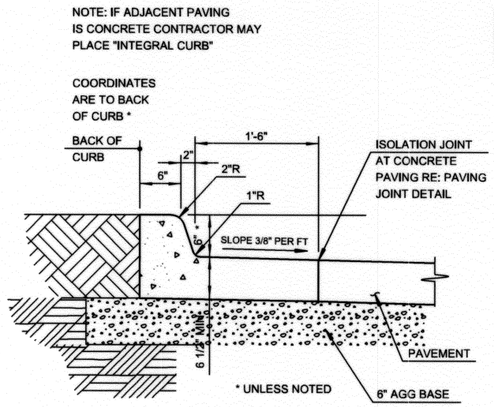

3 FALL-AWAY CURB AND GUTTER
SCALE: NTS

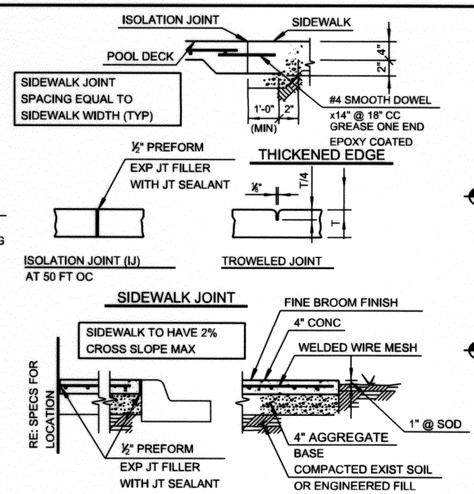

4 SIDEWALK
SCALE: NTS

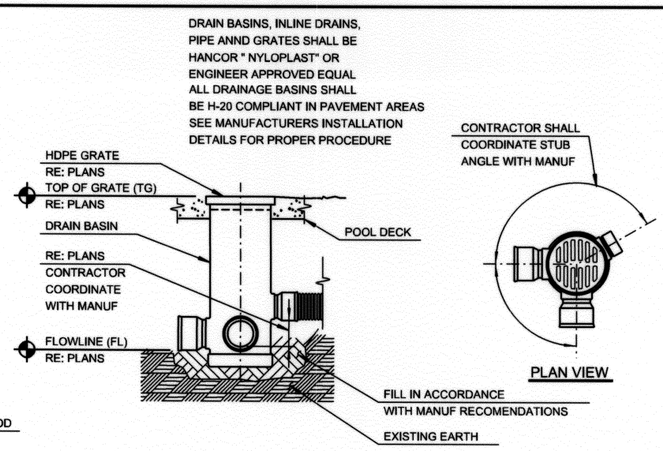

5 AREA INLET
SCALE: NTS

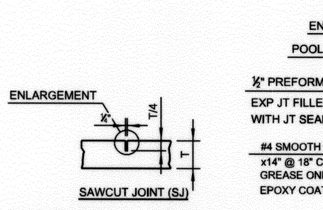

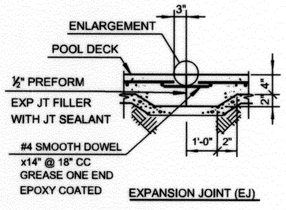

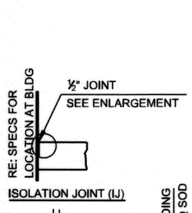

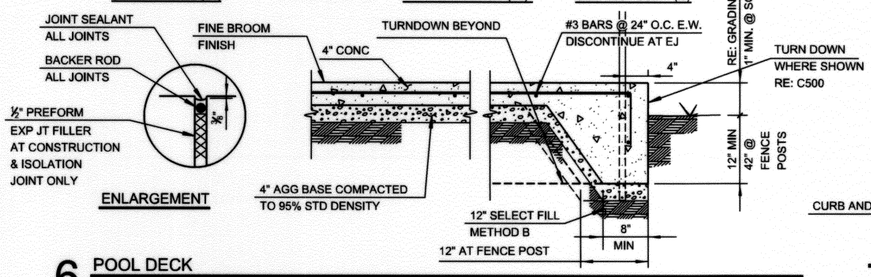

6 POOL DECK
SCALE: NTS

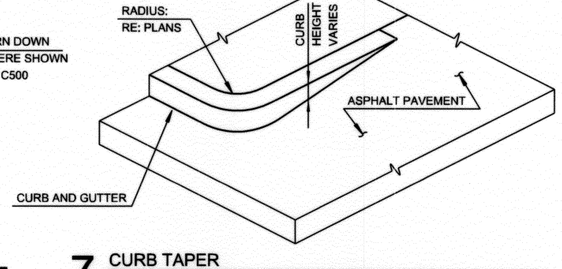

7 CURB TAPER
SCALE: NTS

8 NOT USED
SCALE: NTS

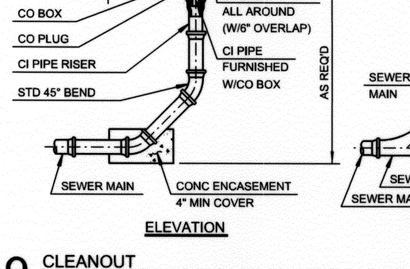

9 CLEANOUT
SCALE: NTS

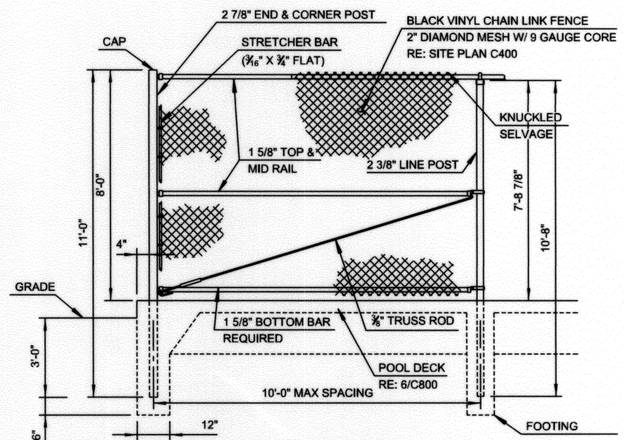

10 8' HIGH FENCE
SCALE: NTS

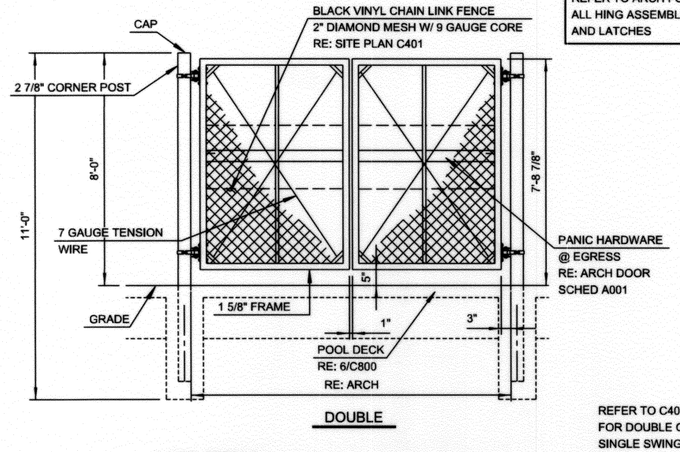

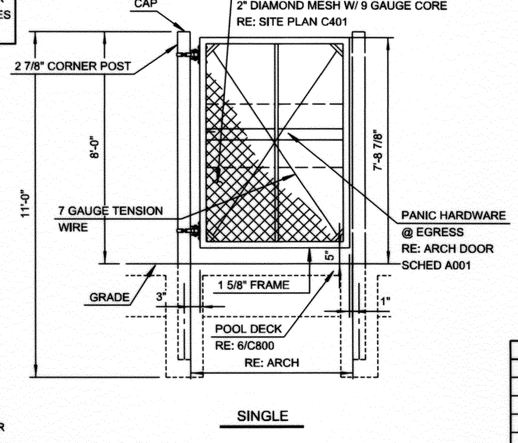

11 GATE DETAIL
SCALE: NTS

wallace
WALLACE ENGINEERING
STRUCTURAL CONSULTANTS INC.
200 EAST MATHEW BRADY STREET
TULSA,OK 74103
(918) 584-5858
OKLAHOMA CA #1460
EXP DATE 6/30/17

LICENSED PROFESSIONAL ENGINEER
JORDAN RODICH
26548
OKLAHOMA
10/24/2016

C800 - DETAILS

PROJECT NO. 147400 CONTRACT # 147400

TULSA PARKS DEPARTMENT
LACY POOL RECONSTRUCTION

CITY OF TULSA, OKLAHOMA
ENGINEERING SERVICES DEPARTMENT

PLANS AND ESTIMATES PREPARED BY: WALLACE ENGINEERING STRUCTURAL CONSULTANTS INC. 200 EAST MATHEW BRADY STREET, TULSA, OK 74103

REVISION	BY	DATE

PLAN SCALE: NA
PROFILE SCALE:
HORIZONTAL: NA
VERTICAL NA

DRAWN	MDE	8/26/16	APPROVED:
DESIGNED	JR	8/26/16	
SURVEY			
PROJ. MGR.		10/16	
LEAD ENGR.			
FIELD MGR.		10/16	
RECOMMENDED: DESIGN MANAGER		10/16	CITY ENGINEER

FILE: DRAWING:
DATE: 10.24.16
ATLAS PAGE NO: 116
SHEET 13 OF 74 SHEETS

10/24/2016 3:24:19 PM \\civil-server\projects\640018 Lacy PoolReconstruction\Dgn\C0800Details.dgn

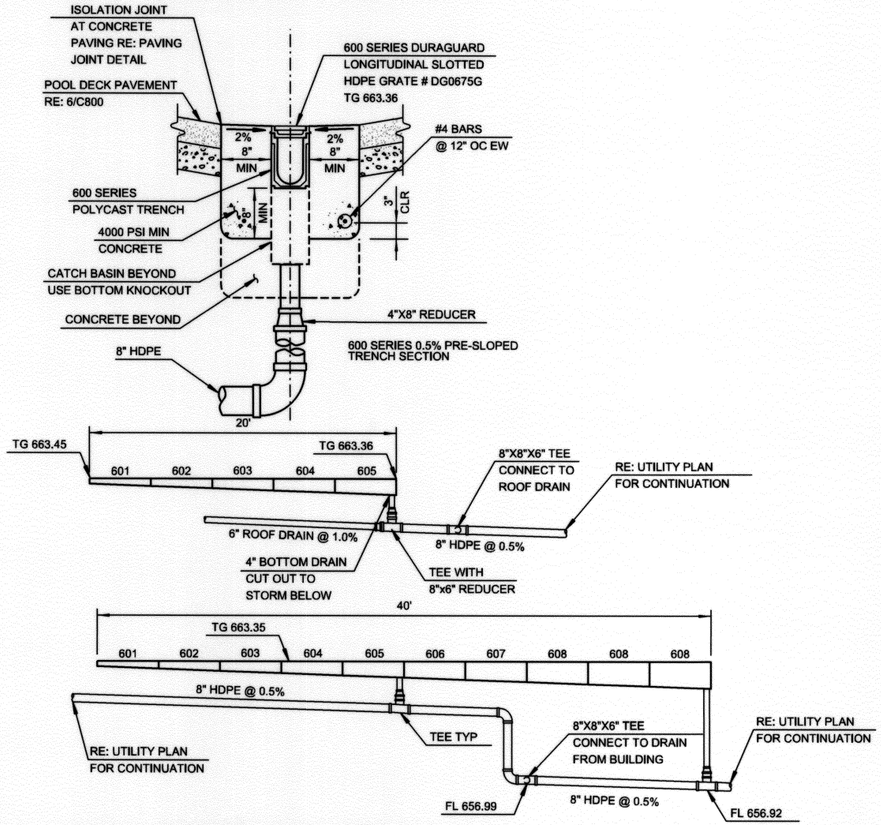

12 POLYCAST 600 SERIES PRESLOPED DRAIN SYSTEM
SCALE: NTS

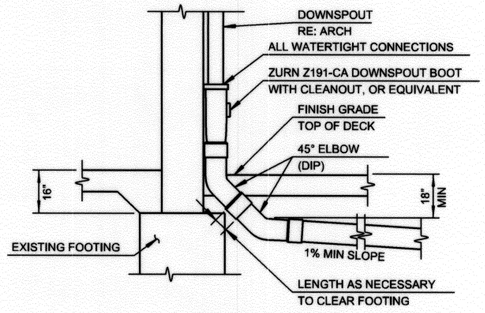

13 DOWNSPOUT TO STORMDRAIN CONNECTION
SCALE: NTS

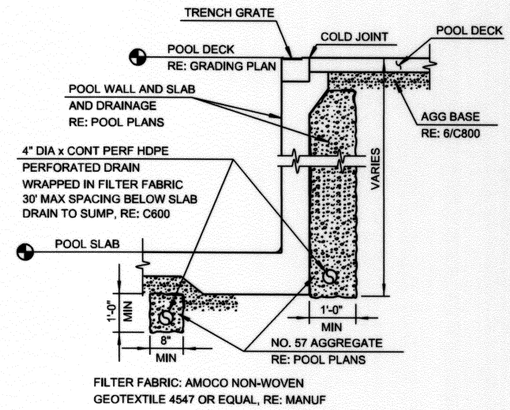

14 POOL SLAB/FOUNDATION DRAIN
SCALE: NTS

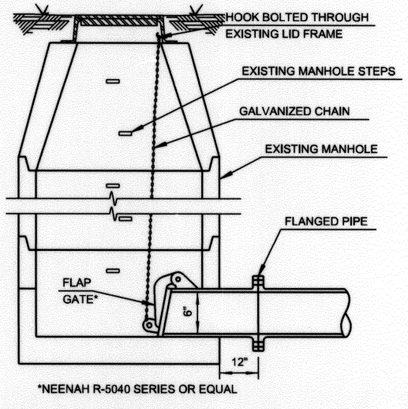

15 FLAP GATE AT MANHOLE
SCALE: NTS

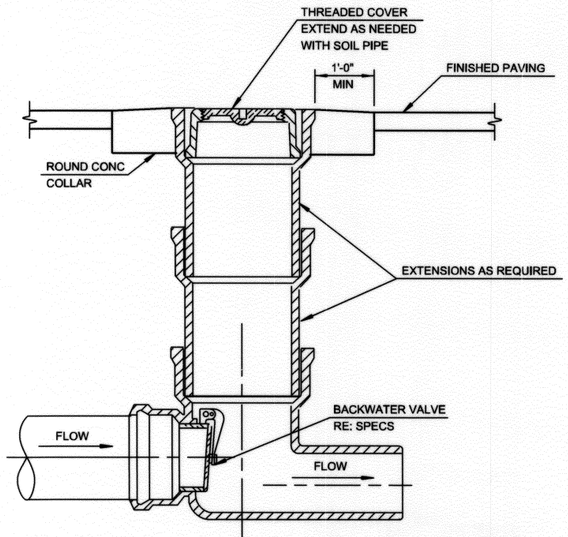

16 BACKWATER VALVE AT SEWER CONNECTION
SCALE: NTS

wallace
WALLACE ENGINEERING
STRUCTURAL CONSULTANTS INC.
200 EAST MATHEW BRADY STREET
TULSA,OK 74103
(918) 584-5858
OKLAHOMA CA #1460
EXP DATE 6/30/17

LICENSED PROFESSIONAL ENGINEER
JORDAN RODICH
26548
OKLAHOMA
10/24/2016

C801 - DETAILS

PROJECT NO. 147400 CONTRACT # 147400

TULSA PARKS DEPARTMENT
LACY POOL RECONSTRUCTION

CITY OF TULSA, OKLAHOMA
ENGINEERING SERVICES DEPARTMENT

PLANS AND ESTIMATES PREPARED BY: WALLACE ENGINEERING
STRUCTURAL CONSULTANTS INC.
200 EAST MATHEW BRADY STREET, TULSA, OK 74103

REVISION	BY	DATE

PLAN SCALE: NA	DRAWN	MDE	8/26/16	APPROVED:
	DESIGNED	JR	8/26/16	
	SURVEY			
PROFILE SCALE:	PROJ. MGR.		10/16	
HORIZONTAL: NA	LEAD ENGR.			
	FIELD MGR.		10/16	
VERTICAL NA	RECOMMENDED: DESIGN MANAGER		10/16	CITY ENGINEER
FILE:	DRAWING:			DATE: 11.11.16
ATLAS PAGE NO: 116				SHEET 14 OF 74 SHEETS

10/24/2016 3:23:47 PM \\civil-server\projects\164008 Lacy Pool Reconstruction\Dgn\C080Details.dgn

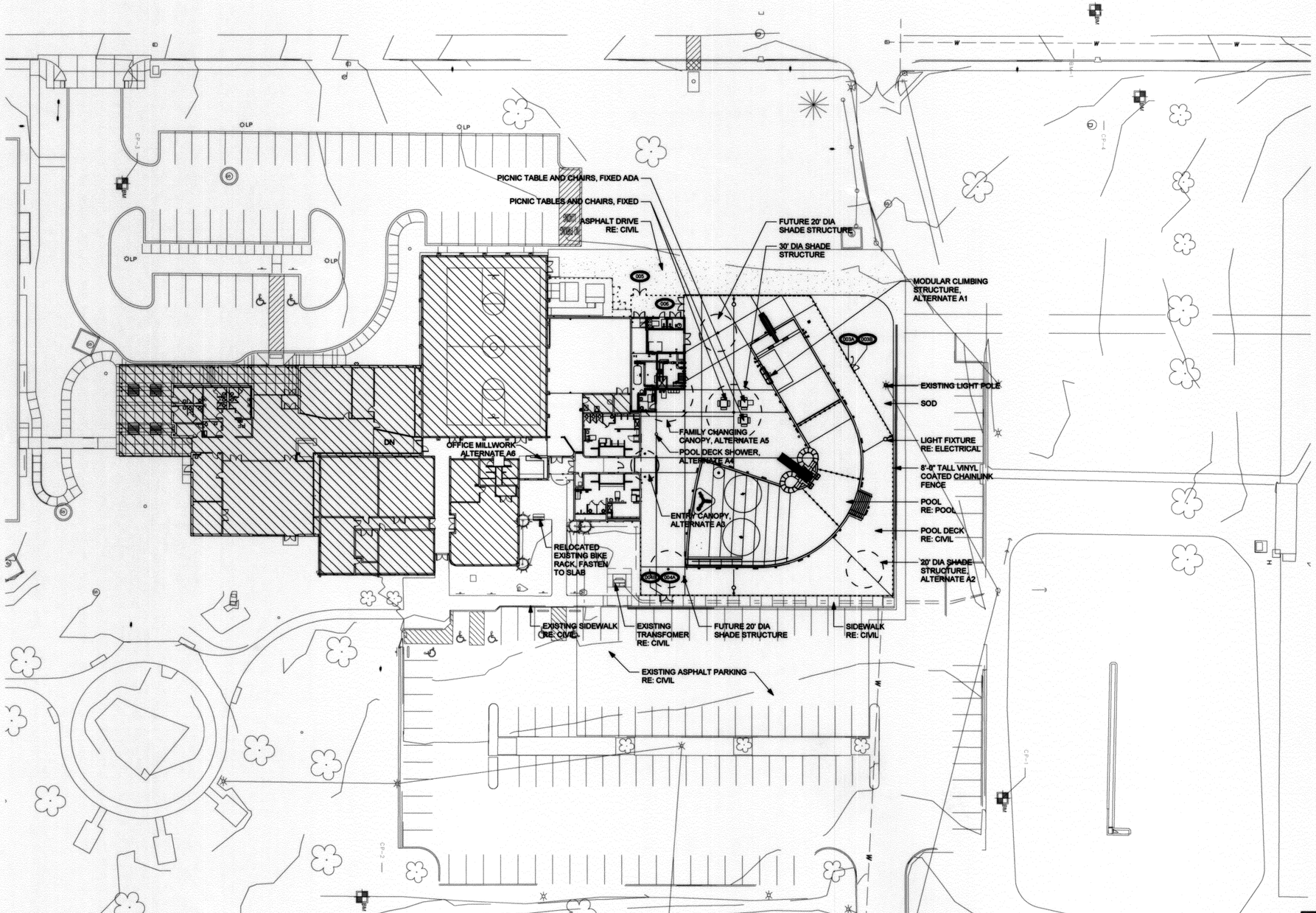

A ARCHITECTURAL SITE PLAN

1" = 30'-0"

NORTH 0' 10' 20' 40' 80 FEET

STATE OF OKLAHOMA
MICHAEL RAY HALL
No. 3381
TULSA, OK
LICENSED ARCHITECT

10-24-16

GH2 ARCHITECTS

AS101 ARCHITECTURAL SITE PLAN

PROJECT NO. 147400 CONTRACT # 147400

TULSA PARKS DEPARTMENT
LACY POOL RECONSTRUCTION

CITY OF TULSA, OKLAHOMA
ENGINEERING SERVICES DEPARTMENT

PLANS AND ESTIMATES PREPARED BY:
GH2 ARCHITECTS, LLC.

REVISION	BY	DATE

PLAN SCALE: x:1" = ??	DRAWN	NS	10/24/2016	APPROVED:
	DESIGNED	BT	10/24/2016	
	SURVEY			
PROFILE SCALE:	PROJ. MGR.	EBW	10/16	
HORIZONTAL: x:1" = ??	LEAD ENGR.			
	FIELD MGR.	EBW	10/16	
VERTICAL x:1" = ?	RECOMMENDED DESIGN MANAGER	HBS	10/16	CITY ENGINEER
FILE: DRAWING: AS101				DATE: 11.11.16
ATLAS PAGE NO: 116				SHEET 15 OF 74 SHEETS

© 2016 COPYRIGHT GH2 ARCHITECTS, LLC

10/27/2016 10:13:00 AM

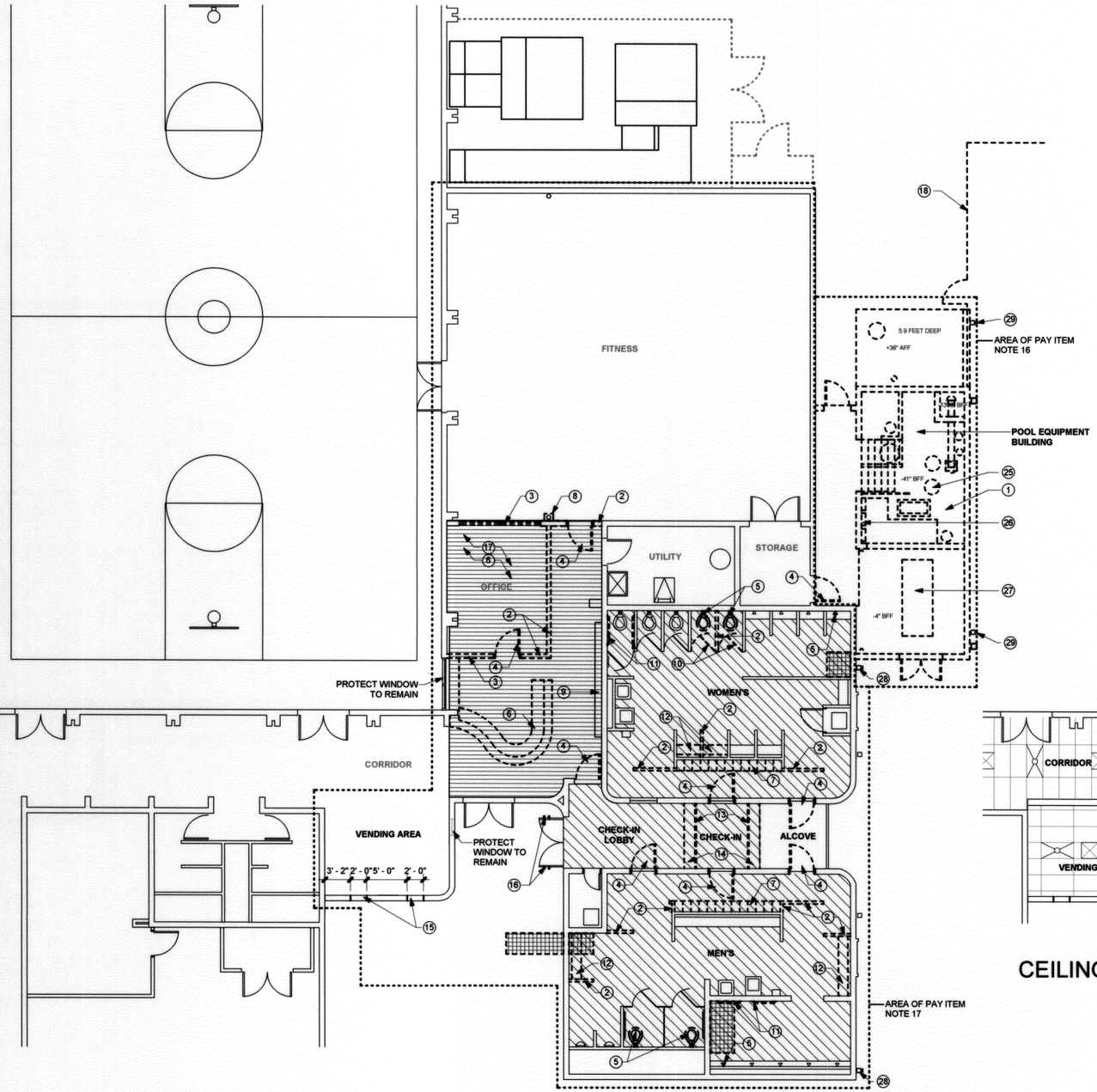

A DEMOLITION PLAN

1/8" = 1'-0"

NORTH 0' 2' 4' 8' 16 FEET

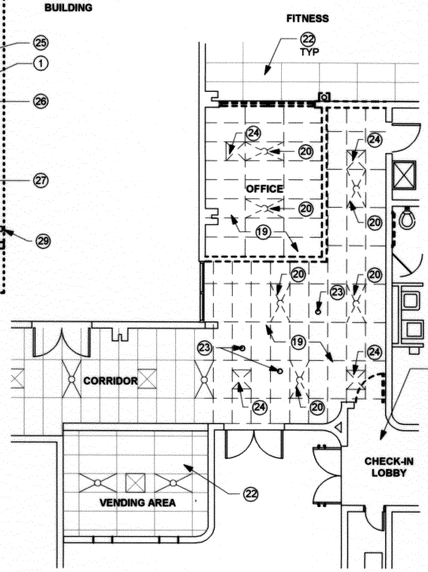

CEILING DEMOLITION PLAN

GENERAL DEMOLITION NOTES

1. ALL ITEMS SHOWN ON DEMOLITION PLANS WITH DASHED LINEWORK ARE TO BE REMOVED. SEE ADDITIONAL SPECIFIC INFORMATION IN "DEMOLITION KEY NOTES" THAT ARE NOTED ON THE DRAWINGS. DEMOLITION KEYNOTES MAY NOT BE SHOWN AT EVERY LOCATION THAT SPECIFIC WORK IS REQUIRED. THEY ARE INTENDED TO APPLY TO ALL LOCATIONS WHERE A SPECIFIC GRAPHIC OCCURS USING DASHED LINEWORK.
2. PATCH AND REPAIR EXISTING SUBSTRATES THAT ARE TO REMAIN AS REQUIRED TO PREPARE THEM FOR NEW WORK AND FINISHES AS DEFINED ELSEWHERE IN THE DOCUMENTS.
3. REMOVE EXISTING SUSPENDED CEILING(S), TRIM, GRID OR FRAMING SYSTEM AND ALL OF ITS COMPONENTS IN THEIR ENTIRETY AT LOCATIONS INDICATED ON PLAN, LEAVING EXPOSED STRUCTURE READY TO RECEIVE NEW CEILINGS.
4. DO NOT ALTER, REMOVE OR DEMOLISH ANY STRUCTURAL SYSTEMS DURING DEMOLITION OR CONSTRUCTION.
5. CONTACT ARCHITECT BEFORE REMOVING OR DEMOLISHING ANY EXISTING CONSTRUCTION OR ITEMS NOT SHOWN TO BE REMOVED.
6. CONTRACTOR TO COORDINATE ALL DEMOLITION WORK WITH NEW CONSTRUCTION AND RENOVATION PRIOR TO START
7. LOCATIONS OF EXISTING FIXTURES ARE BASED ON GENERAL FIELD OBSERVATIONS. CONTRACTOR TO FIELD VERIFY LOCATIONS OF FIXTURES AND REPORT ANY DISCREPANCIES TO THE ARCHITECT.
8. REFER TO CIVIL (C300), STRUCTURAL AND MEP/FP (P100, E110, M101) DRAWINGS FOR DEMOLITION.

DEMOLITION KEYNOTES

1. REMOVE BUILDING AND FOUNDATIONS IN THEIR ENTIRETY
2. REMOVE WALL
3. REMOVE WINDOW SYSTEM
4. REMOVE DOOR AND FRAME
5. REMOVE FIXTURES RE: MEP
6. REMOVE MILLWORK
7. REMOVE LOCKERS AND BASE
8. REMOVE FURRING AROUND EXISTING COLUMN
9. PROTECT EXISTING ARTWORK TO REMAIN
10. REMOVE PARTITION DOORS
11. REMOVE GRAB BARS AND PATCH WALL
12. REMOVE CONCRETE BENCH
13. REMOVE WIRE MESH SCREEN
14. REMOVE CONCRETE COUNTER TOP
15. REMOVE PORTION OF EXISTING WALL
16. REMOVE HARDWARE. EXISTING DOOR AND FRAME TO REMAIN.
17. REMOVE/SALVAGE/RELOCATE DVR, TELEPHONE, AND DATA. COORDINATE WITH CITY OF TULSA AND AT&T PRIOR TO REMOVAL. REMOVE ELECTRICAL FROM WALLS NOTED TO REMOVE.
18. REMOVE CHAINLINK FENCE, RE: CIVIL
19. REMOVE CEILING SYSTEM
20. SALVAGE/RELOCATE EXISTING LIGHT FIXTURES
21. REMOVE/SALVAGE/RELOCATE EXISTING VENDING MACHINES
22. REPLACE CEILING TILES, CEILING GRID TO REMAIN
23. REMOVE LIGHT FIXTURE
24. REMOVE DIFFUSER
25. REMOVE PLUMBING SYSTEM IN ITS ENTIREY
26. REMOVE ELECTRICAL AND LIGHTING SYSTEM IN ITS ENTIREY
27. REMOVE POOL SYSTEM IN ITS ENTIREY
28. EXISTING CAMERA TO REMAIN
29. SALVAGE CAMERA, RETURN TO OWNER

DEMOLITION LEGEND

- REMOVE PAINTED TILE FLOOR FINISH IN ITS ENTIRETY TO CONCRETE SLAB
- COMPLETE REMOVAL OF POOL EQUIPMENT BUILDING STRUCTURE AND SYSTEMS
- REMOVE AREA OF EXISTING CONCRETE FLOOR
- REMOVE AREA OF EXISTING SLAB FOR NEW SANITARY SEWER LINE
- ITEM TO BE DEMOLISHED

STATE OF OKLAHOMA
MICHAEL RAY HALL
No. 3381
TULSA, OK
LICENSED ARCHITECT
10-24-16

GH2 ARCHITECTS

D110 DEMOLITION PLAN

PROJECT NO. 147400 CONTRACT # 147400

TULSA PARKS DEPARTMENT

LACY POOL RECONSTRUCTION

CITY OF TULSA, OKLAHOMA

ENGINEERING SERVICES DEPARTMENT

PLANS AND ESTIMATES PREPARED BY:

GH2 ARCHITECTS, LLC.

REVISION	BY	DATE

PLAN SCALE: x;1" = ??'

PROFILE SCALE:

HORIZONTAL: x;1" = ??'

VERTICAL x;1" = ?'

DRAWN	NS	10/24/2016	APPROVED:
DESIGNED	BT	10/24/2016	
SURVEY			
PROJ. MGR.			
LEAD ENGR.			
FIELD MGR.			
RECOMMENDED DESIGN MANAGER			CITY ENGINEER

FILE: DRAWING: D110

DATE: 11.11.16

ATLAS PAGE NO: 116

SHEET 16 OF 74 SHEETS

2134 N. MADISON PLACE, TULSA, OK GH2 PROJECT #:2014022.01

© 2016 COPYRIGHT GH2 ARCHITECTS, LLC

10/27/2016 10:13:01 AM

ROOM FINISH SCHEDULE

* PLAN NORTH

#	ROOM NAME	FLOOR	BASE	WALLS				CEILING		NOTES
				NORTH*	EAST *	SOUTH*	WEST*	FINISH	HEIGHT	
102	CHECK-IN LOBBY	SC	-	TPT1	TPT1	TPT1	TPT1	PT-1	7'-4"	1.
103	CHECK-IN	SC	-	TPT1	TPT1	TPT1	TPT1	PT-1	7'-4"	1.
104	ALCOVE	SC	-	TPT1	TPT1	TPT1	TPT1	PT-1	7'-4"	1.
105	MECHANICAL	EXISTING	-	EXISTING	EXISTING	EXISTING	EXISTING	EXISTING	EXISTING	1.
106	MEN'S	EXY4	EXY	TPT1	TPT1	TPT1	TPT1	PT-1	8'-6"	2.
107	WOMEN'S	EXY4	EXY	TPT1	TPT1	TPT1	TPT1	PT-1	8'-6"	2.
127	POOL EQUIPMENT	SC	-	-	-	-	-	PT-1	OTS	1.
128	POOL STORAGE	SC	-	-	-	-	-	PT-1	OTS	1.
129	ACID	SC	-	-	-	-	-	SC	8'-0"	1.3.4.
130	CHLORINE	SC	-	-	-	-	-	SC	8'-0"	1.
131	FAMILY CHANGING	EXY4	EXY	TPT1	TPT1	TPT1	TPT1	PT-1	8'-4"	
140	FITNESS	SP-1	RB-2	PAINT TO MATCH EXISTING	PAINT TO MATCH EXISTING	PAINT TO MATCH EXISTING	PAINT TO MATCH EXISTING	ACT-1	VARIES	2.
141	OFFICE	EXISTING	EXISTING	PT-2	PT-2	PT-2	PT-2	ACT-1	EXISTING	
150	HALLWAY	EXISTING/PC	EXISTING/RB-2	PAINT TO MATCH EXISTING	PAINT TO MATCH EXISTING	PAINT TO MATCH EXISTING	PAINT TO MATCH EXISTING	EXISTING	EXISTING	

NOTES:
1. NO BASE ON CMU WALLS.
2. REFER TO REFERENCE FLOOR PLAN FOR SPECIFIC FINISH LOCATIONS.
3. ALL METAL, FITTINGS, EXPOSED CONNECTIONS TO BE EPOXY PAINTED TO PREVENT CORROSION
4. ALL CUT METAL TO BE SEALED WITH CORROSION RESISTANT COATING

FINISH LEGEND

NOTES:
1. PAINT ALL EXPOSED MECHANICAL, ELECTRICAL, COMMUNICATIONS, PLUMBING, SPRINKLER COMPONENTS TO MATCH ADJACENT SURFACE COLOR UNLESS NOTED OTHERWISE.

FLOOR FINISH:

SC	SEAL CONCRETE FINISH: LIGHT BROOM
PC	POLISHED CONCRETE FINISH: SMOOTH (MATCH EXISTING)
EXY4	EPOXY DOUBLE BROADCAST SYSTEM COLOR: GREY
SP-1	SPORTS FLOOR TO MATCH EXISTING

BASE FINISH:

EXY	8" EPOXY COVE BASE COLOR: GREY
RB-1	RUBBER BASE MANUF: ROPPE COLOR: 129 DOLPHIN
RB-2	RUBBER BASE TO MATCH EXISTING

WALL FINISH:

CMU-1	8" CONCRETE MASONRY UNIT STYLE: MIDWEST BLOCK SMOOTH FACE COLOR: GREY SIZE: 8" X 8" X 16"
PT-1	MANUF: SHERWIN WILLIAMS COLOR: # SW 7007 BRIGHT WHITE
PT-2	MANUF: SHERWIN WILLIAMS FINISH: EGGSHELL COLOR: # SW 7044 AMAZING GRAY
PT-5	MANUF: SHERWIN WILLIAMS COLOR: # SW 6258 TRICORN BLACK
TPT1	TNEMEC PAINT TO MATCH: MANUF: SHERWIN WILLIAMS FINISH: SEMI-GLOSS COLOR # SW 7008 ALABASTER
TPT2/PT-3	TNEMEC PAINT TO MATCH: MANUF: SHERWIN WILLIAMS FINISH: SEMI-GLOSS COLOR # SW 7606 BLUE CRUISE
TPT3	TNEMEC PAINT TO MATCH: MANUF: SHERWIN WILLIAMS FINISH: SEMI-GLOSS COLOR # SW 6711 PARAKEET

CEILING FINISH:

WDC-1	WOOD SOFFIT SEALED
ACT-1	ACOUSTIC CEILING TO MATCH EXISTING

MISCELLANEOUS:

TPT4/PT-4	EXTERIOR ACCENT PAINT MANUF: SHERWIN WILLIAMS COLOR: # SW 7675 SEALSKIN
TPT5	TNEMEC PAINT TO MATCH: STANDING SEAM METAL ROOF COLOR: BRISTOL BLUE
SS-1	STAINLESS STEEL
SS-2	SOLID SURFACE MANUF: CORIAN COLOR: SILT
ST-1	WOOD STAIN MANUF: SHERWIN WILLIAMS COLOR: PEARWOOD 3121-B
VIN	VINYL COATED COLOR: BLACK

GLAZING LEGEND

G1	1" CLEAR INSULATED GLASS TEMPERED
G2	1/4" CLEAR GLASS TEMPERED LAMINATED

DOOR SCHEDULE

#	ROOM NAME	DOOR TYPE	DOOR WIDTH	DOOR HEIGHT	DOOR FINISH	DOOR GLAZING	HARDWARE SET	FRAME TYPE	FRAME FINISH	FIRE RATING	DETAILS HEAD	DETAILS JAMB	DETAILS THRES	NOTES
003A	POOL DECK	D	3' - 6"	8' - 0"	VIN	-	1	-	VIN	-	-	-	-	
003B	POOL DECK	D	3' - 6"	8' - 0"	VIN	-	1	-	VIN	-	-	-	-	
004A	POOL DECK	D	3' - 6"	8' - 0"	VIN	-	1	-	VIN	-	-	-	-	
004B	POOL DECK	D	3' - 6"	8' - 0"	VIN	-	1	-	VIN	-	-	-	-	
005	MECHANCIAL YARD	E	7' - 0"	8' - 0"	VIN	-	2	-	VIN	-	-	-	-	1.
006	POOL DECK	E	7' - 0"	8' - 0"	VIN	-	2	-	VIN	-	-	-	-	1.
102	CHECK-IN LOBBY	EXIST	6' - 0"	7' - 0"	PT-2	-	3	EXIST	PT-2	-	EXIST	EXIST	EXIST	1.
103	CHECK-IN	F	3' - 0"	7' - 0"	VIN	-	4	-	VIN	-	-	-	-	
104	ALCOVE	C (EXIST)	8' - 0"	8' - 0"	PT-2	-	11	EXIST	PT-2	-	EXIST	EXIST	EXIST	
105	MECHANICAL	EXIST	2' - 0"	6' - 8"	PT-2	-	5	EXIST	PT-2	-	EXIST	EXIST	EXIST	
107	WOMEN'S	EXIST	2' - 10"	6' - 8"	PT-2	-	5	EXIST	PT-2	-	EXIST	EXIST	EXIST	
127	POOL EQUIPMENT	A	6' - 0"	7' - 0"	PT-2	-	6	2	PT-2	-	F/18	E/18	D/18	1.2.4.
128	POOL STORAGE	A	6' - 0"	7' - 0"	PT-2	-	8	2	PT-2	-	F/18	E/18	D/18	1.4.
129	ACID	A	3' - 0"	7' - 0"	PT-2	-	7	3	PT-2	-	F/18	E/18	D/18	2.4.
130	CHLORINE	A	6' - 0"	7' - 0"	PT-2	-	6	3	PT-2	-	F/18	E/18	D/18	1.2.4.
131	FAMILY CHANGING	A	3' - 0"	7' - 0"	PT-2	-	9	1	PT-2	-	F/18	E/18	C/18	
140	FITNESS	B	6' - 0"	7' - 0"	CLEAR ANODIZED	G2	10	1	CLEAR ANODIZED	-				1.

NOTES:
1. PAIR (2) OF DOORS
2. 1" UNDERCUT
3. 2" HOLLOW METAL FRAME
4. HOT DIPPED GALVANIZED DOOR AND FRAME

GENERAL NOTES:
ALL HARDWARE TO MEET ADA AND ANSI ACCESSIBILITY REQUIREMENTS.
ALL TOILET PARTITION STALL DOORS TO PROVIDE A MINIMUM OF 32" CLEAR TO MEET ADA/ANSI 117.1 - 2003 REQUIREMENTS.

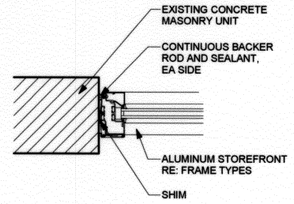

H STOREFRONT JAMB
1 1/2" = 1'-0"

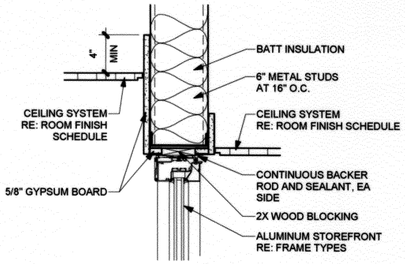

G STOREFRONT HEAD
1 1/2" = 1'-0"

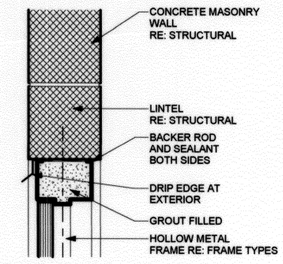

F CMU DOOR HEAD
1 1/2" = 1'-0"

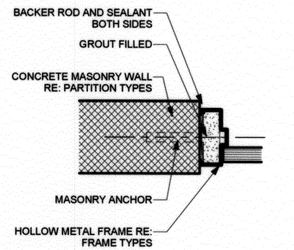

E CMU DOOR JAMB
1 1/2" = 1'-0"

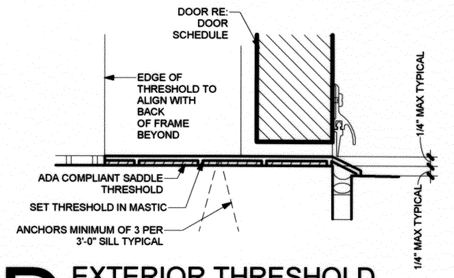

D EXTERIOR THRESHOLD
6" = 1'-0"

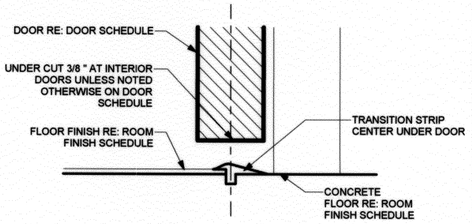

C TRANSITION STRIP
6" = 1'-0"

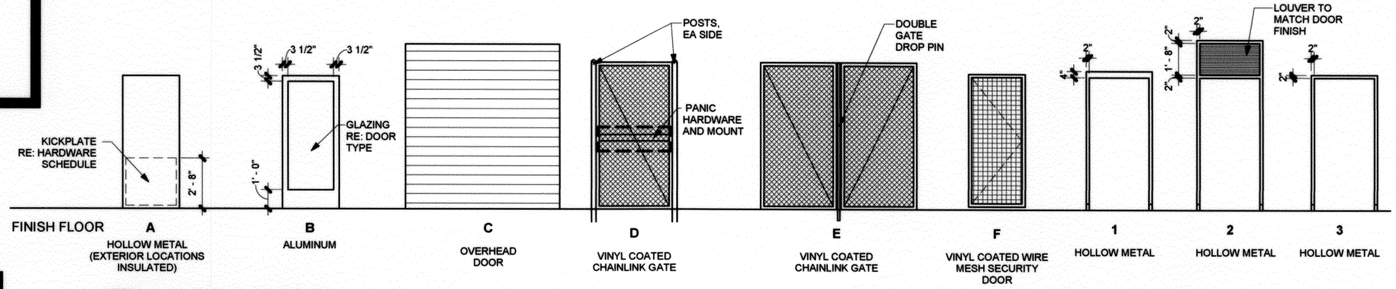

B DOOR TYPES
1/4" = 1'-0"

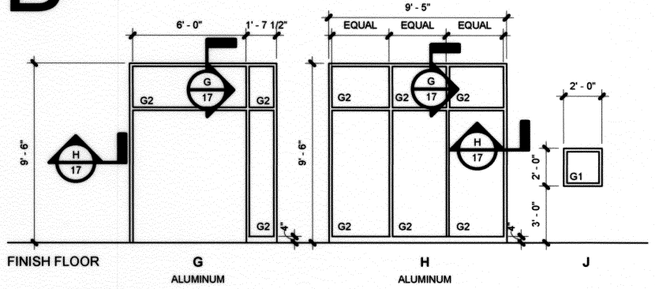

A FRAME TYPES
1/4" = 1'-0"

STATE OF OKLAHOMA
MICHAEL RAY HALL
No. 3381
TULSA, OK
LICENSED ARCHITECT
10-24-16

GH2 ARCHITECTS

A001 SCHEDULES AND NOTES

PROJECT NO. 147400 CONTRACT # 147400

TULSA PARKS DEPARTMENT
LACY POOL RECONSTRUCTION

CITY OF TULSA, OKLAHOMA
ENGINEERING SERVICES DEPARTMENT

PLANS AND ESTIMATES PREPARED BY:
GH2 ARCHITECTS, LLC.

REVISION	BY	DATE

PLAN SCALE: x;1" = ??'
PROFILE SCALE: x;1" = ??'
HORIZONTAL: x;1" = ??'
VERTICAL x;1" = ?'

DRAWN	NS	10/24/2016
DESIGNED	BT	10/24/2016
SURVEY		
PROJ. MGR.		
LEAD ENGR.		
FIELD MGR.		10/16
RECOMMENDED: DESIGN MANAGER		10/16

APPROVED: CITY ENGINEER

FILE: DRAWING: A001
DATE: 11.11.16
ATLAS PAGE NO: 116
SHEET 17 OF 74 SHEETS

© 2016 COPYRIGHT GH2 ARCHITECTS, LLC

ACCESSORY AND EQUIPMENT SCHEDULE (X)

#	DESCRIPTION	FURNISHES	INSTALLATION	FINAL HOOK-UP	NOTES
1	TOILET TISSUE (DUAL-ROLL) DISPENSER	CONTRACTOR	CONTRACTOR	CONTRACTOR	
2	NAPKIN DISPOSAL	CONTRACTOR	CONTRACTOR	CONTRACTOR	
3	SOAP DISPENSER	CONTRACTOR	CONTRACTOR	CONTRACTOR	
4	1 1/2" GRAB BAR 42" HORIZONTAL	CONTRACTOR	CONTRACTOR	CONTRACTOR	
5	1 1/2" GRAB BAR 36" HORIZONTAL	CONTRACTOR	CONTRACTOR	CONTRACTOR	
6	1 1/2" GRAB BAR 18" VERTICAL	CONTRACTOR	CONTRACTOR	CONTRACTOR	
7	1 1/2" GRAB BAR 18" HORIZONTAL	CONTRACTOR	CONTRACTOR	CONTRACTOR	
8	WARM-AIR HAND DRYER	CONTRACTOR	CONTRACTOR	CONTRACTOR	
9	SURFACE MOUNTED COAT HOOK/TOWEL PIN	CONTRACTOR	CONTRACTOR	CONTRACTOR	
10	MOP HOLDER AND SHELF	CONTRACTOR	CONTRACTOR	CONTRACTOR	
11	BABY CHANGING STATION (ADA)	CONTRACTOR	CONTRACTOR	CONTRACTOR	
12	MIRROR	CONTRACTOR	CONTRACTOR	CONTRACTOR	
13	SWIM SUIT WATER EXTRACTOR	CONTRACTOR	CONTRACTOR	CONTRACTOR	
14	SHOWER CURTAIN, CURTAIN ROD AND CURTAIN HOOKS	CONTRACTOR	CONTRACTOR	CONTRACTOR	
15	12"X12" LOCKERS (DAY GUEST) (4 WIDE X 4 TALL UNIT)	CONTRACTOR	CONTRACTOR	CONTRACTOR	
16	ADA FOLDING SHOWER SEAT	CONTRACTOR	CONTRACTOR	CONTRACTOR	

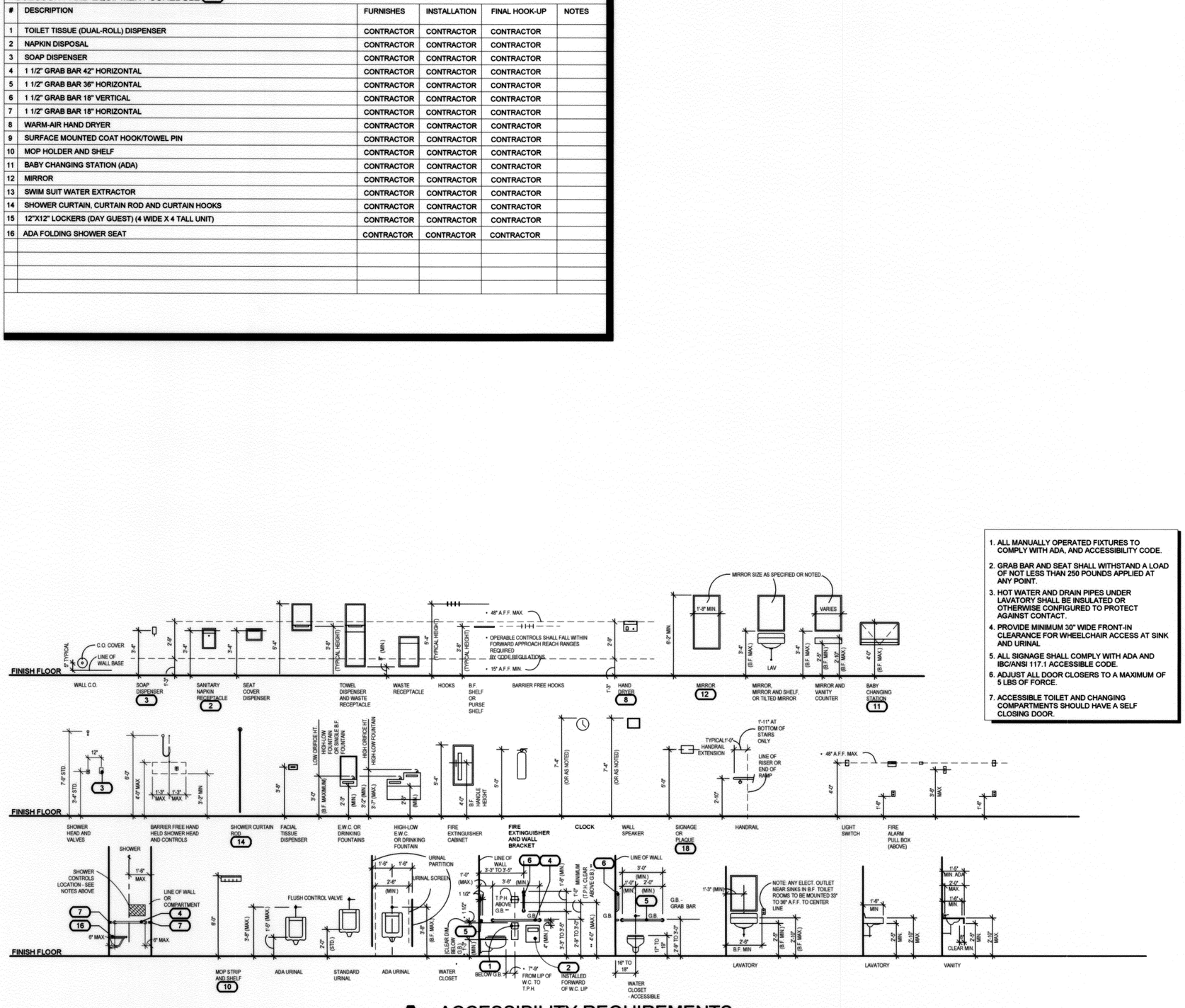

A ACCESSIBILITY REQUIREMENTS

1/4" = 1'-0"

1. ALL MANUALLY OPERATED FIXTURES TO COMPLY WITH ADA, AND ACCESSIBILITY CODE.
2. GRAB BAR AND SEAT SHALL WITHSTAND A LOAD OF NOT LESS THAN 250 POUNDS APPLIED AT ANY POINT.
3. HOT WATER AND DRAIN PIPES UNDER LAVATORY SHALL BE INSULATED OR OTHERWISE CONFIGURED TO PROTECT AGAINST CONTACT.
4. PROVIDE MINIMUM 30" WIDE FRONT-IN CLEARANCE FOR WHEELCHAIR ACCESS AT SINK AND URINAL
5. ALL SIGNAGE SHALL COMPLY WITH ADA AND IBC/ANSI 117.1 ACCESSIBLE CODE.
6. ADJUST ALL DOOR CLOSERS TO A MAXIMUM OF 5 LBS OF FORCE.
7. ACCESSIBLE TOILET AND CHANGING COMPARTMENTS SHOULD HAVE A SELF CLOSING DOOR.

STATE OF OKLAHOMA
MICHAEL RAY HALL
No. 3381
TULSA, OK
LICENSED ARCHITECT
10-24-16

GH2 ARCHITECTS

A002 EQUIPMENT SCHEDULE AND DETAILS

PROJECT NO. 147400 CONTRACT # 147400

TULSA PARKS DEPARTMENT
LACY POOL RECONSTRUCTION

CITY OF TULSA, OKLAHOMA
ENGINEERING SERVICES DEPARTMENT

PLANS AND ESTIMATES PREPARED BY:
GH2 ARCHITECTS, LLC.

REVISION	BY	DATE

PLAN SCALE: x;1" = ?'
PROFILE SCALE:
HORIZONTAL: x;1" = ?'
VERTICAL x;1" = ?'

DRAWN	NS	10/24/2016	APPROVED:
DESIGNED	BT	10/24/2016	
SURVEY			
PROJ. MGR.		10/26	
LEAD ENGR.			
FIELD MGR.		10/16	
RECOMMENDED: DESIGN MANAGER		10/26/16	CITY ENGINEER

FILE: DRAWING: A002
DATE: 11.11.16
ATLAS PAGE NO: 116
SHEET 18 OF 74 SHEETS

© 2016 COPYRIGHT GH2 ARCHITECTS, LLC

GENERAL PARTITION TYPE NOTES

1. AT TOILET EXTEND GYPSUM BOARD TO DECK.
2. IF NO CEILING, EXTEND GYPSUM BOARD TO UNDERSIDE OF STRUCTURE/DECK.

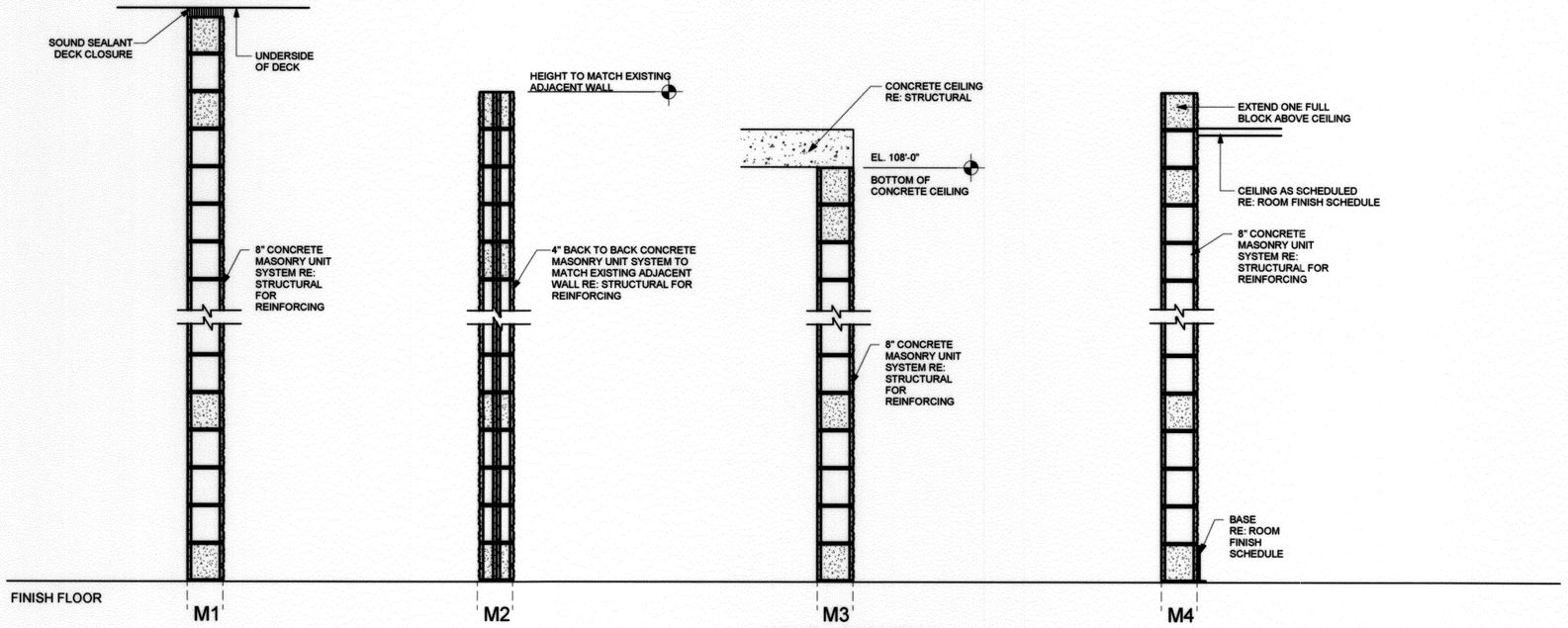

M10 SMOOTH FACE

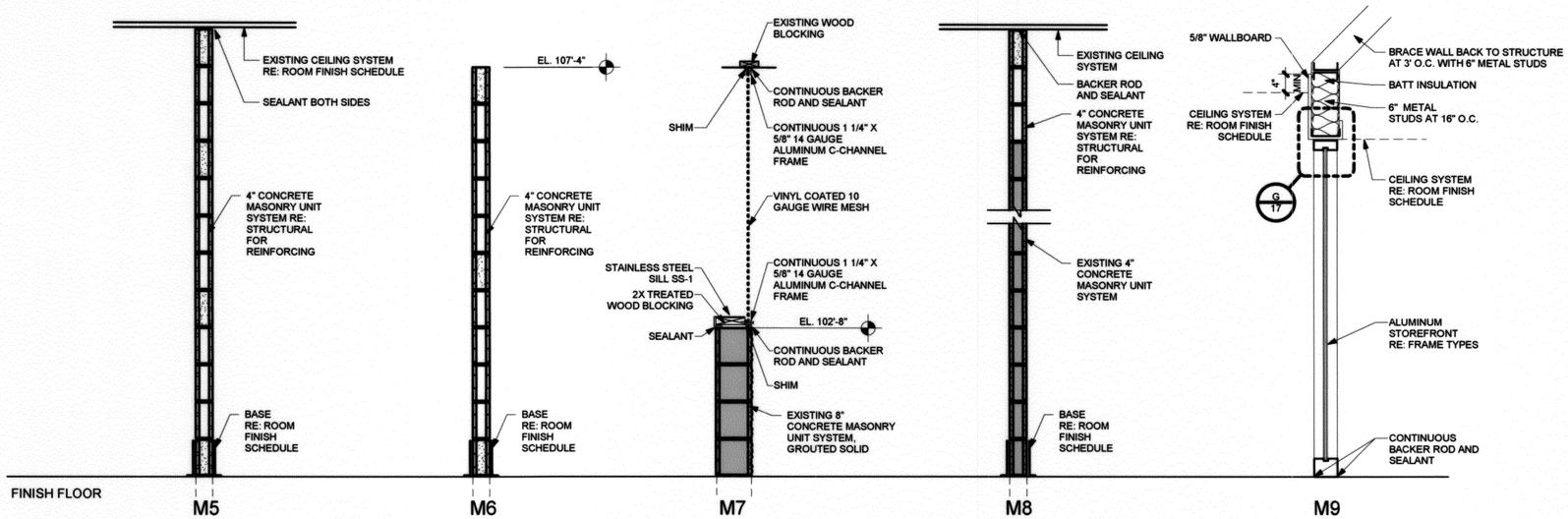

A PARTITION TYPES
N.T.S.

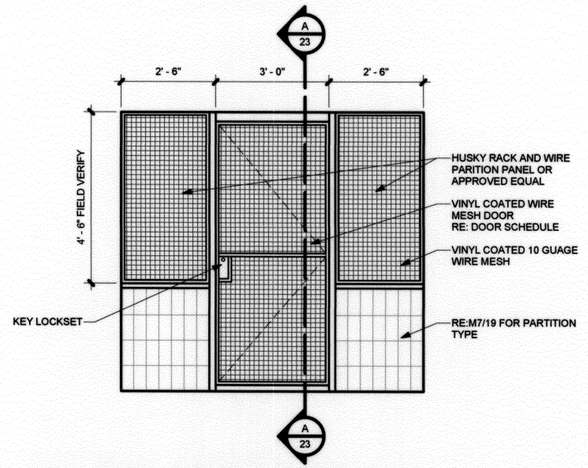

C WIRE MESH ELEVATION
1/2" = 1'-0"

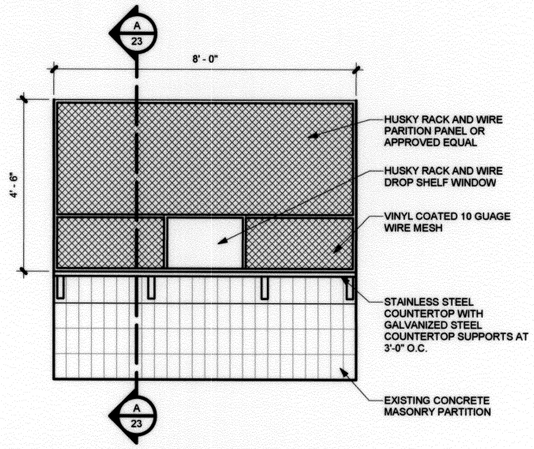

B WIRE MESH ELEVATION
1/2" = 1'-0"

STATE OF OKLAHOMA
MICHAEL RAY HALL
No. 3381
TULSA, OK
LICENSED ARCHITECT
10-24-16

GH2 ARCHITECTS

A003 PARTITION TYPES AND DETAILS

PROJECT NO. 147400 CONTRACT # 147400

TULSA PARKS DEPARTMENT
LACY POOL RECONSTRUCTION

CITY OF TULSA, OKLAHOMA
ENGINEERING SERVICES DEPARTMENT

PLANS AND ESTIMATES PREPARED BY:
GH2 ARCHITECTS, LLC.

REVISION	BY	DATE

PLAN SCALE: x;1" = ??'	DRAWN	NS	10/24/2016	APPROVED:
	DESIGNED	BT	10/24/2016	
	SURVEY			
PROFILE SCALE:	PROJ. MGR.		10/26	
HORIZONTAL: x;1" = ??'	LEAD ENGR.			
	FIELD MGR.		10/26	
VERTICAL x;1" = ?'	RECOMMENDED: DESIGN MANAGER		10/26	CITY ENGINEER
FILE:	DRAWING: A004			DATE: 11.11.16
ATLAS PAGE NO: 116				SHEET 19 OF 74 SHEETS

© 2016 COPYRIGHT GH2 ARCHITECTS, LLC

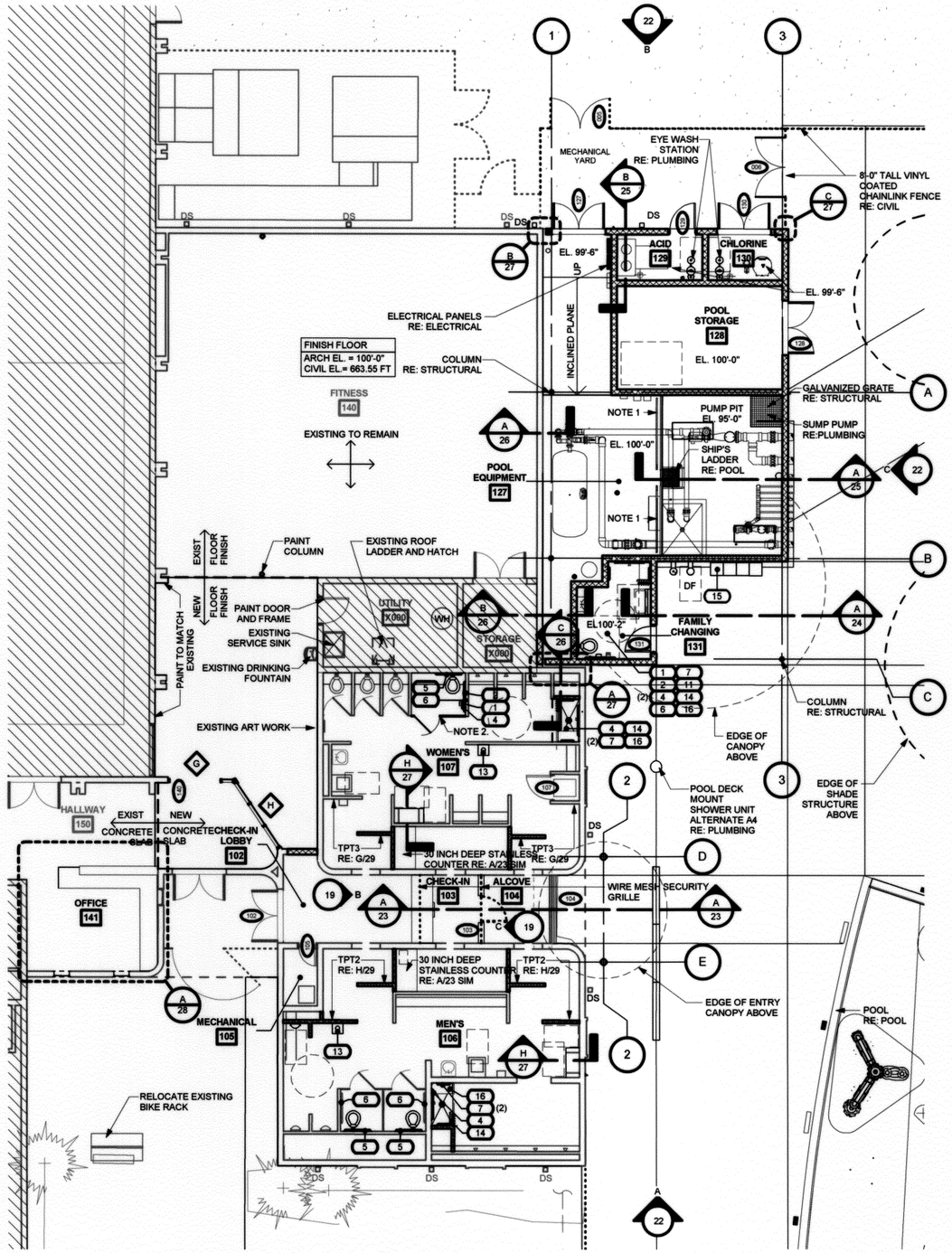

A FLOOR PLAN REFERENCE

1/8" = 1'-0"

NORTH 0' 2' 4' 8' 16 FEET

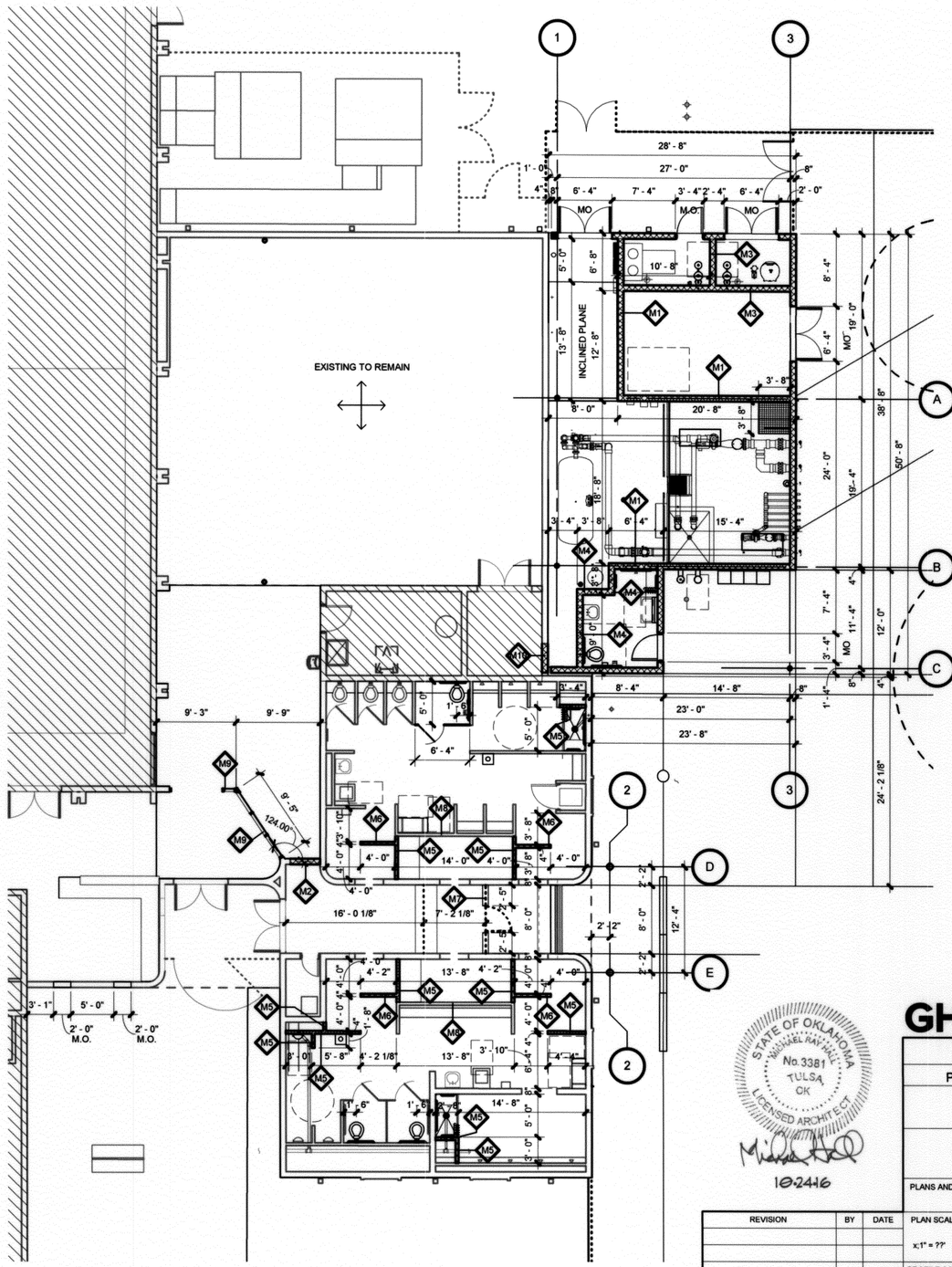

B FLOOR PLAN DIMENSION

1/8" = 1'-0"

NORTH 0' 2' 4' 8' 16 FEET

GENERAL NOTES

1. REFER TO SHEET 19 FOR EQUIPMENT SCHEDULE
2. REFER TO SHEET 18 FOR THE FINISH SCHEDULE AND DOOR SCHEDULE

PARTITION LEGEND

- CMU
- PARTITION
- EXISTING

PARTITION TYPES, RE: SHEET 20

NOTES

1. REMOVABLE 1 1/2" OUTSIDE DIAMETER HOT-DIP GALVANIZED PIPE GUARD RAIL, RE: STRUCTURAL.
2. NEW TOILET PARTITION TO MATCH EXISTING

STATE OF OKLAHOMA
MICHAEL RAY HALL
No. 3381
TULSA, OK
LICENSED ARCHITECT
10-24-16

GH2 ARCHITECTS

A111 FLOOR PLANS

PROJECT NO. 147400 CONTRACT # 147400

TULSA PARKS DEPARTMENT
LACY POOL RECONSTRUCTION

CITY OF TULSA, OKLAHOMA
ENGINEERING SERVICES DEPARTMENT

PLANS AND ESTIMATES PREPARED BY:
GH2 ARCHITECTS, LLC.

REVISION	BY	DATE

PLAN SCALE: x;1" = ??	DRAWN	NS	10/24/2016
	DESIGNED	BT	10/24/2016
	SURVEY		
PROFILE SCALE:	PROJ. MGR.		
	LEAD ENGR.		
HORIZONTAL: x;1" = ??	FIELD MGR.		
VERTICAL x;1" = ?'	RECOMMENDED: DESIGN MANAGER		
FILE:	DRAWING: A111		
ATLAS PAGE NO: 116			

APPROVED:

CITY ENGINEER

DATE: 11.21.16

SHEET 20 OF 74 SHEETS

© 2016 COPYRIGHT GH2 ARCHITECTS, LLC

10/27/2016 10:13:13 AM

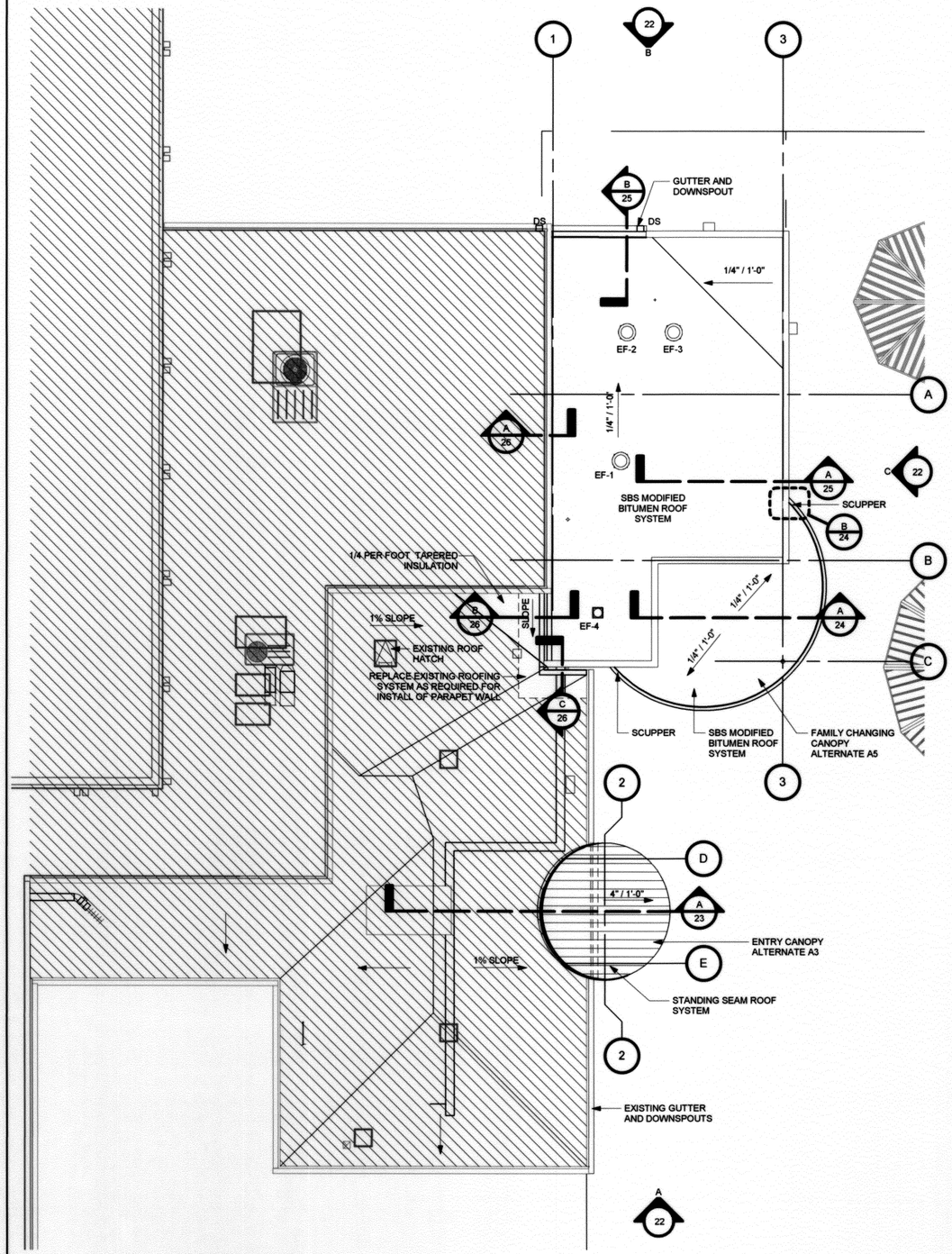

A ROOF PLAN
1/8" = 1'-0"

NORTH 0' 2' 4' 8' 16 FEET

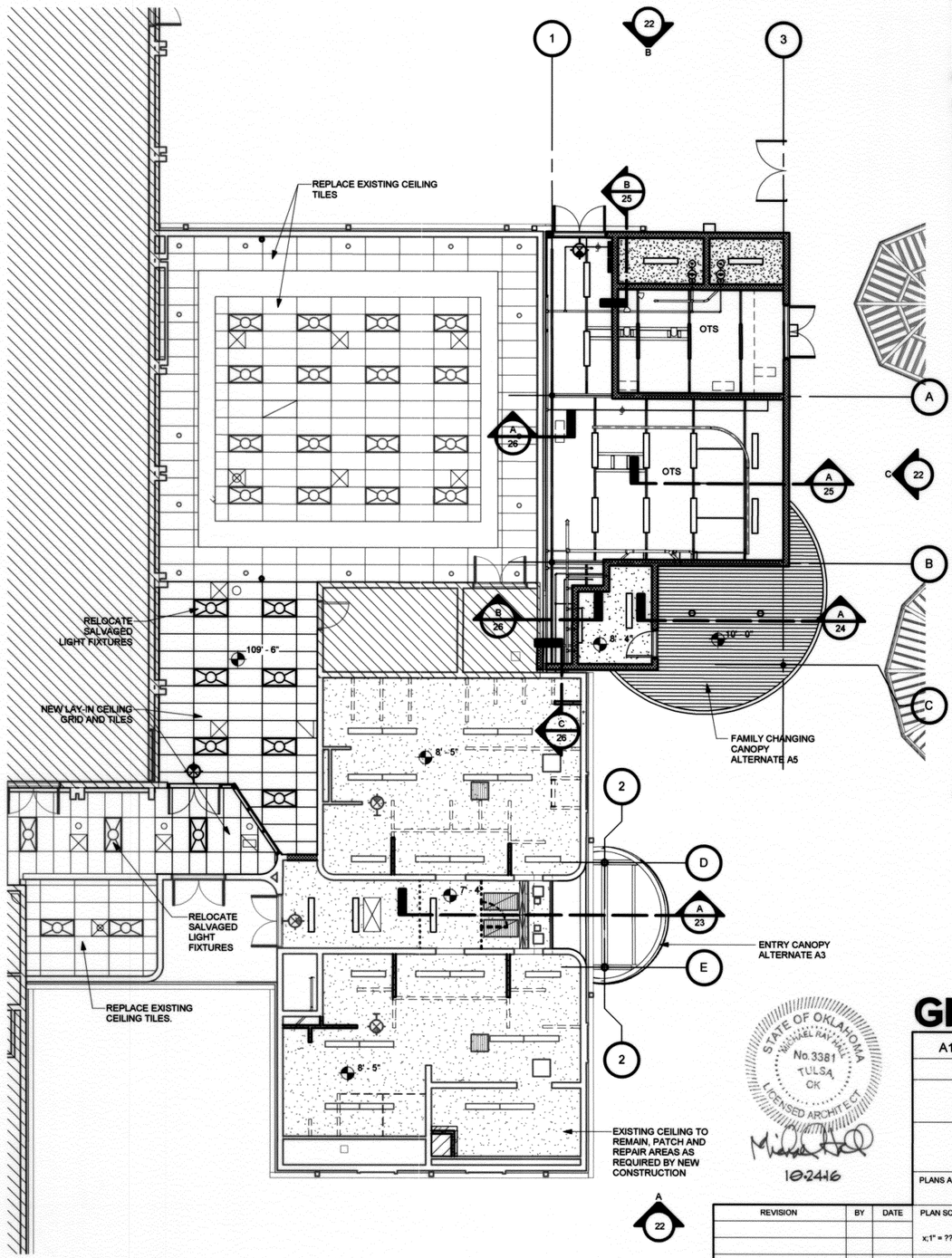

B REFLECTED CEILING PLAN
1/8" = 1'-0"

NORTH 0' 2' 4' 8' 16 FEET

NOTES

1. GYPSUM BOARD CONTROL JOINT (CJ) NO. 093

REFLECTED CEILING PLAN LEGEND

CEILING MATERIAL

- PAINTED GYPSUM BOARD
- ACT - 2 X 4 ACOUSTICAL LAY-IN CEILING
- WOOD SOFFIT, 5/4" X 6" WOOD BOARDS WITH 1/8" GAP, WDC-1
- OTS - OPEN TO STRUCTURE PAINT

LIGHT FIXTURES: RE: ELECTRICAL

- LIGHT FIXTURE
- EXTERIOR WALL MOUNTED LIGHT FIXTURE
- RECESSED LIGHT FIXTURE
- FIXTURE
- EXIT SIGN
- 2X4 FLORESCENT LIGHT FIXTURE

MECHANICAL FIXTURES: RE: MECHANICAL

- DIFFUSER
- RETURN
- HEATER

STATE OF OKLAHOMA
MICHAEL RAY HALL
No. 3381
TULSA, OK
LICENSED ARCHITECT
10-24-16

GH2 ARCHITECTS

A113 ROOF AND REFELECTED CEILING PLAN

PROJECT NO. 147400 CONTRACT # 147400

TULSA PARKS DEPARTMENT
LACY POOL RECONSTRUCTION

CITY OF TULSA, OKLAHOMA
ENGINEERING SERVICES DEPARTMENT

PLANS AND ESTIMATES PREPARED BY:
GH2 ARCHITECTS, LLC.

REVISION	BY	DATE

PLAN SCALE: x:1" = ??	DRAWN	NS	10/24/2016	APPROVED:
	DESIGNED	BT	10/24/2016	
	SURVEY			
PROFILE SCALE:	PROJ. MGR.			
HORIZONTAL: x:1" = ??	LEAD ENGR.			
	FIELD MGR.			
VERTICAL x:1" = ?	RECOMMENDED			
	DESIGN MANAGER			CITY ENGINEER
FILE: DRAWING:A113				DATE: 11.11.16
ATLAS PAGE NO: 116				SHEET 21 OF 74 SHEETS

2134 N. MADISON PLACE, TULSA, OK GH2 PROJECT #:20140022.01

© 2016 COPYRIGHT GH2 ARCHITECTS, LLC

10/27/2016 10:13:16 AM

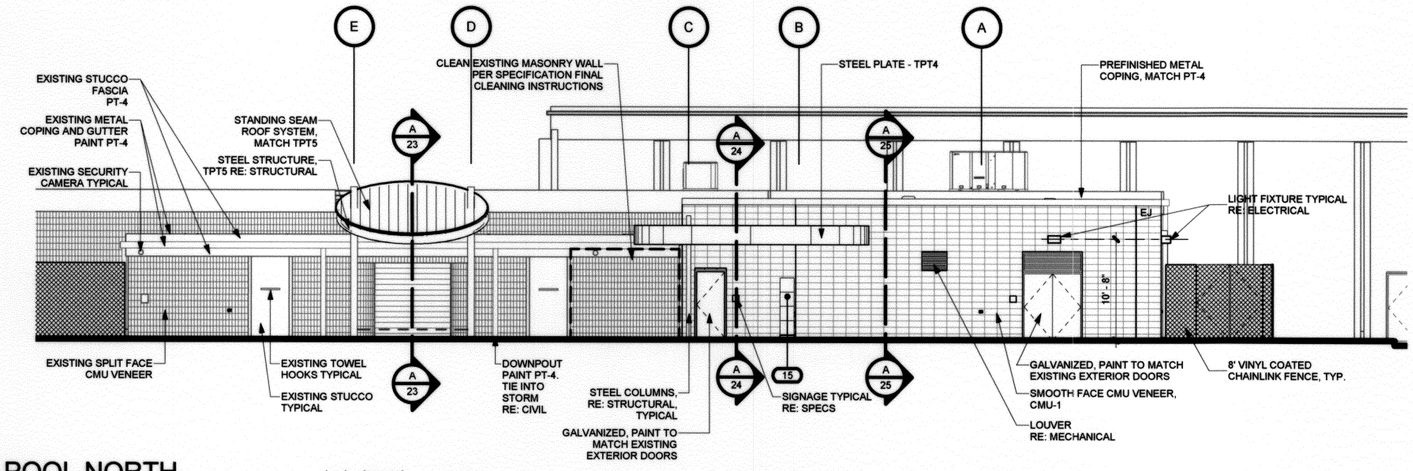

C ELEVATION POOL NORTH

1/8" = 1'-0"

0' 2' 4' 8' 16 FEET

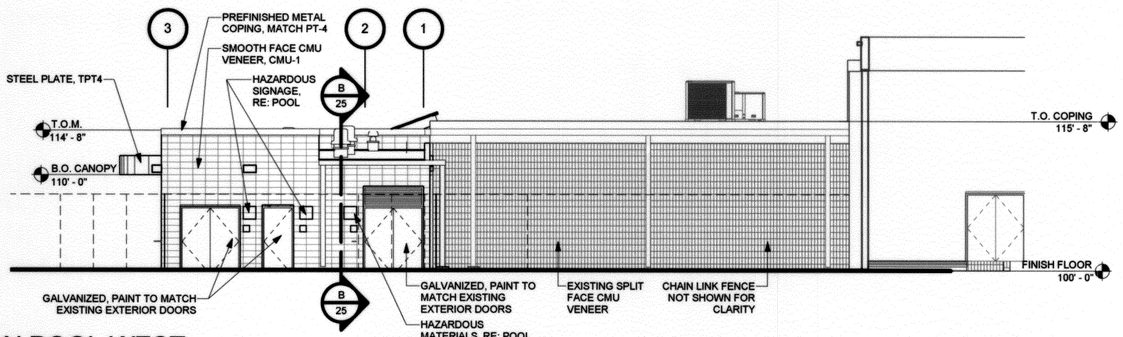

B ELEVATION POOL WEST

1/8" = 1'-0"

0' 2' 4' 8' 16 FEET

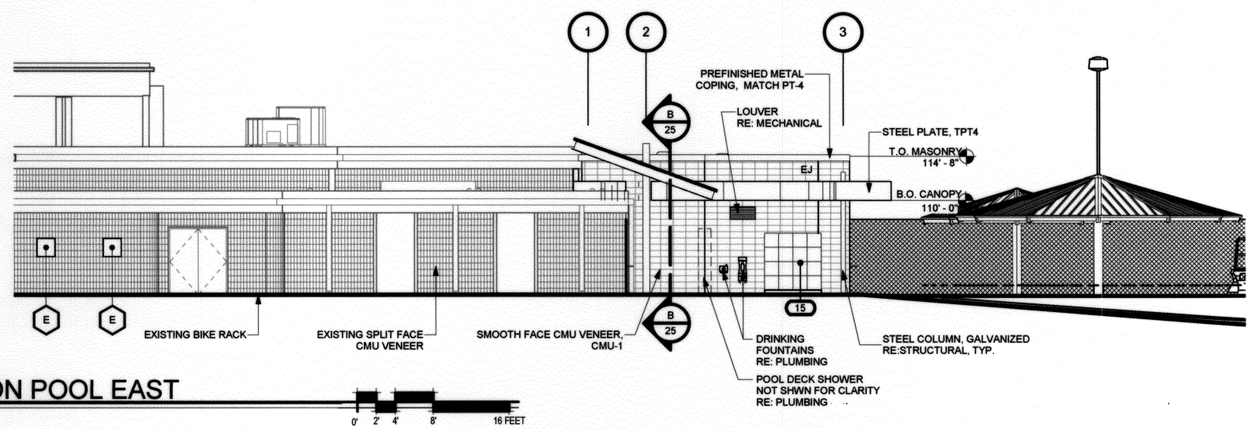

A ELEVATION POOL EAST

1/8" = 1'-0"

0' 2' 4' 8' 16 FEET

10/27/2016 11:14:52 AM

STATE OF OKLAHOMA
MICHAEL RAY HALL
No. 3381
TULSA, OK
LICENSED ARCHITECT

10-24-16

GH2 ARCHITECTS

A201 EXTERIOR ELEVATIONS

PROJECT NO. 147400 CONTRACT # 147400

TULSA PARKS DEPARTMENT
LACY POOL RECONSTRUCTION

CITY OF TULSA, OKLAHOMA
ENGINEERING SERVICES DEPARTMENT

PLANS AND ESTIMATES PREPARED BY:
GH2 ARCHITECTS, LLC.

REVISION	BY	DATE

PLAN SCALE: x:1" = ??'
PROFILE SCALE:
HORIZONTAL: x:1" = ??'
VERTICAL x:1" = ?'

DRAWN	NS	10/24/2016
DESIGNED	BT	10/24/2016
SURVEY		
PROJ. MGR.	EF	10/24/16
LEAD ENGR.		
FIELD MGR.	BT	10/24/16
RECOMMENDED DESIGN MANAGER	MS	10/24/16

APPROVED:
CITY ENGINEER

FILE: DRAWING: A201
DATE: 11.11.16
ATLAS PAGE NO: 116
SHEET 22 OF 74 SHEETS

© 2016 COPYRIGHT GH2 ARCHITECTS, LLC

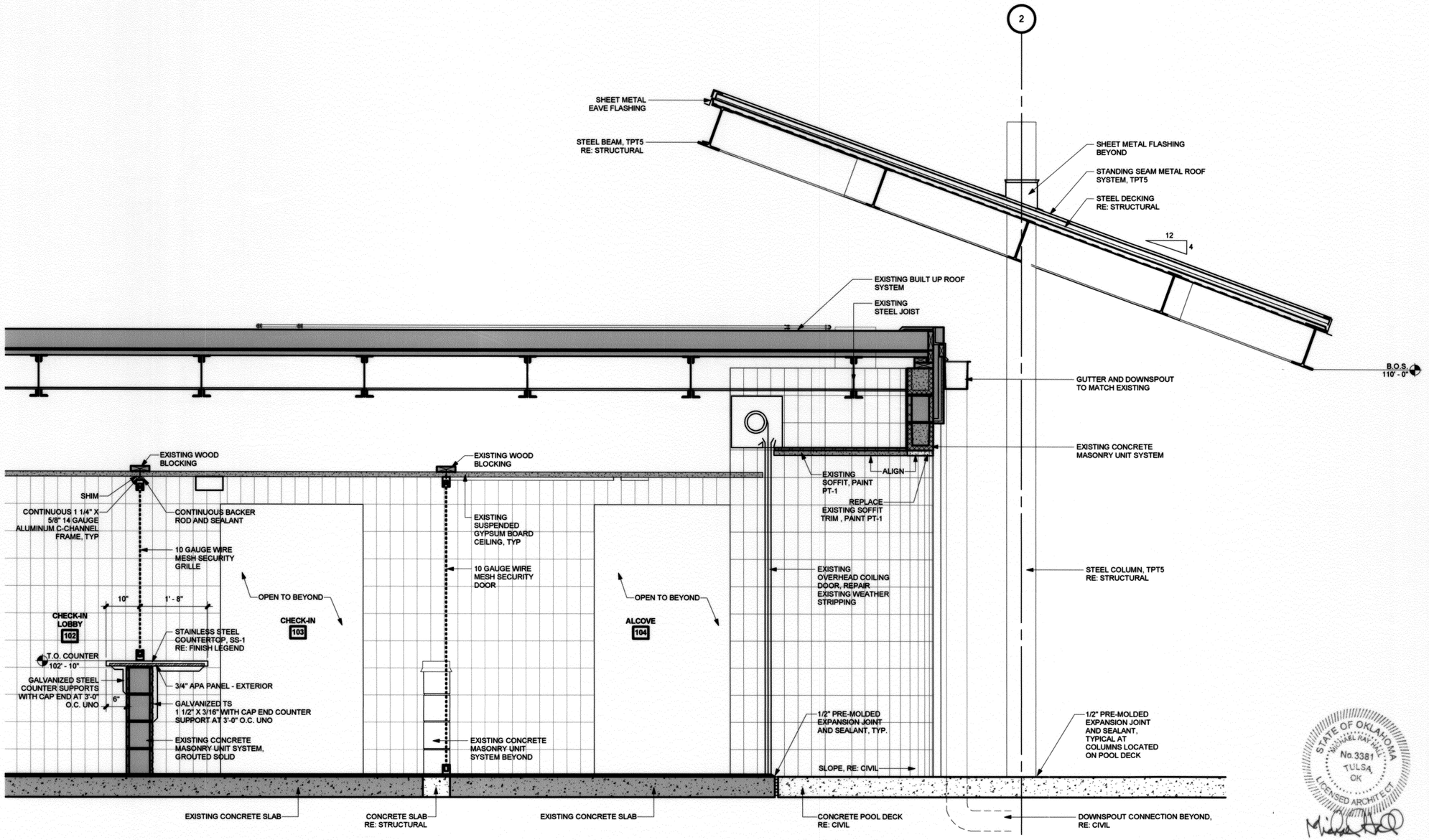

A SECTION AT EXISTING CHECK-IN

3/4" = 1'-0"

STATE OF OKLAHOMA
MICHAEL RAY HALL
No. 3381
TULSA, OK
LICENSED ARCHITECT

10-24-16

GH2 ARCHITECTS

A301 WALL SECTIONS

PROJECT NO. 147400 CONTRACT # 147400

TULSA PARKS DEPARTMENT
LACY POOL RECONSTRUCTION

CITY OF TULSA, OKLAHOMA
ENGINEERING SERVICES DEPARTMENT

PLANS AND ESTIMATES PREPARED BY:
GH2 ARCHITECTS, LLC.

REVISION	BY	DATE

PLAN SCALE: x;1" = ??'
PROFILE SCALE:
HORIZONTAL: x;1" = ??'
VERTICAL x;1" = ?'

DRAWN	NS	10/24/2016	APPROVED:
DESIGNED	BT	10/24/2016	
SURVEY			
PROJ. MGR.		10/16	
LEAD ENGR.			
FIELD MGR.		10/16	
RECOMMENDED: DESIGN MANAGER		10/16	CITY ENGINEER

FILE: DRAWING: A301
DATE: 11.11.16
ATLAS PAGE NO: 116
SHEET 23 OF 74 SHEETS

10/27/2016 10:13:22 AM

© 2016 COPYRIGHT GH2 ARCHITECTS, LLC

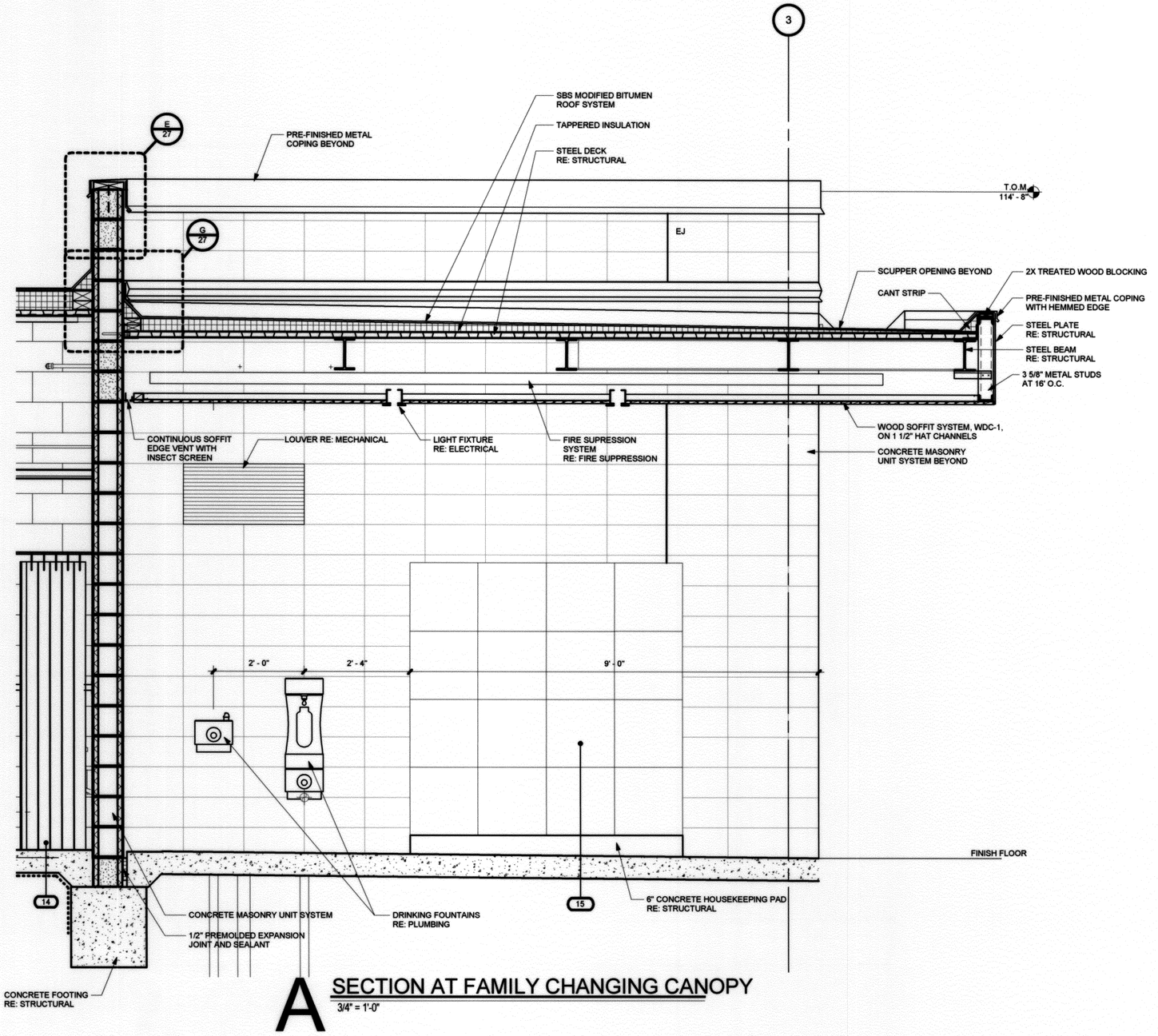

A SECTION AT FAMILY CHANGING CANOPY
3/4" = 1'-0"

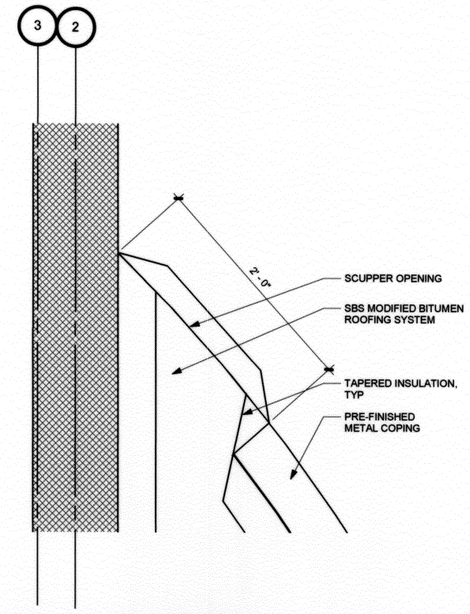

B SCUPPER AT CANOPY
1 1/2" = 1'-0"

10/27/2016 11:14:53 AM

STATE OF OKLAHOMA
MICHAEL RAY HALL
No. 3381
TULSA, OK
LICENSED ARCHITECT
10-24-16

GH2 ARCHITECTS

A302 WALL SECTIONS

PROJECT NO. 147400 CONTRACT # 147400

TULSA PARKS DEPARTMENT
LACY POOL RECONSTRUCTION

CITY OF TULSA, OKLAHOMA
ENGINEERING SERVICES DEPARTMENT

PLANS AND ESTIMATES PREPARED BY:
GH2 ARCHITECTS, LLC.

REVISION	BY	DATE

PLAN SCALE: x:1" = ??'	DRAWN	NS	10/24/2016	APPROVED:
	DESIGNED	BT	10/24/2016	
	SURVEY			
PROFILE SCALE:	PROJ. MGR.	EF	10/26	
HORIZONTAL: x:1" = ??'	LEAD ENGR.			
	FIELD MGR.	RW	10/26	
VERTICAL x:1" = ?'	RECOMMENDED	HHS	10/26	CITY ENGINEER
	DESIGN MANAGER			
FILE:	DRAWING: A302			DATE: 11.11.16
ATLAS PAGE NO: 116				SHEET 24 OF 74 SHEETS

© 2016 COPYRIGHT GH2 ARCHITECTS, LLC

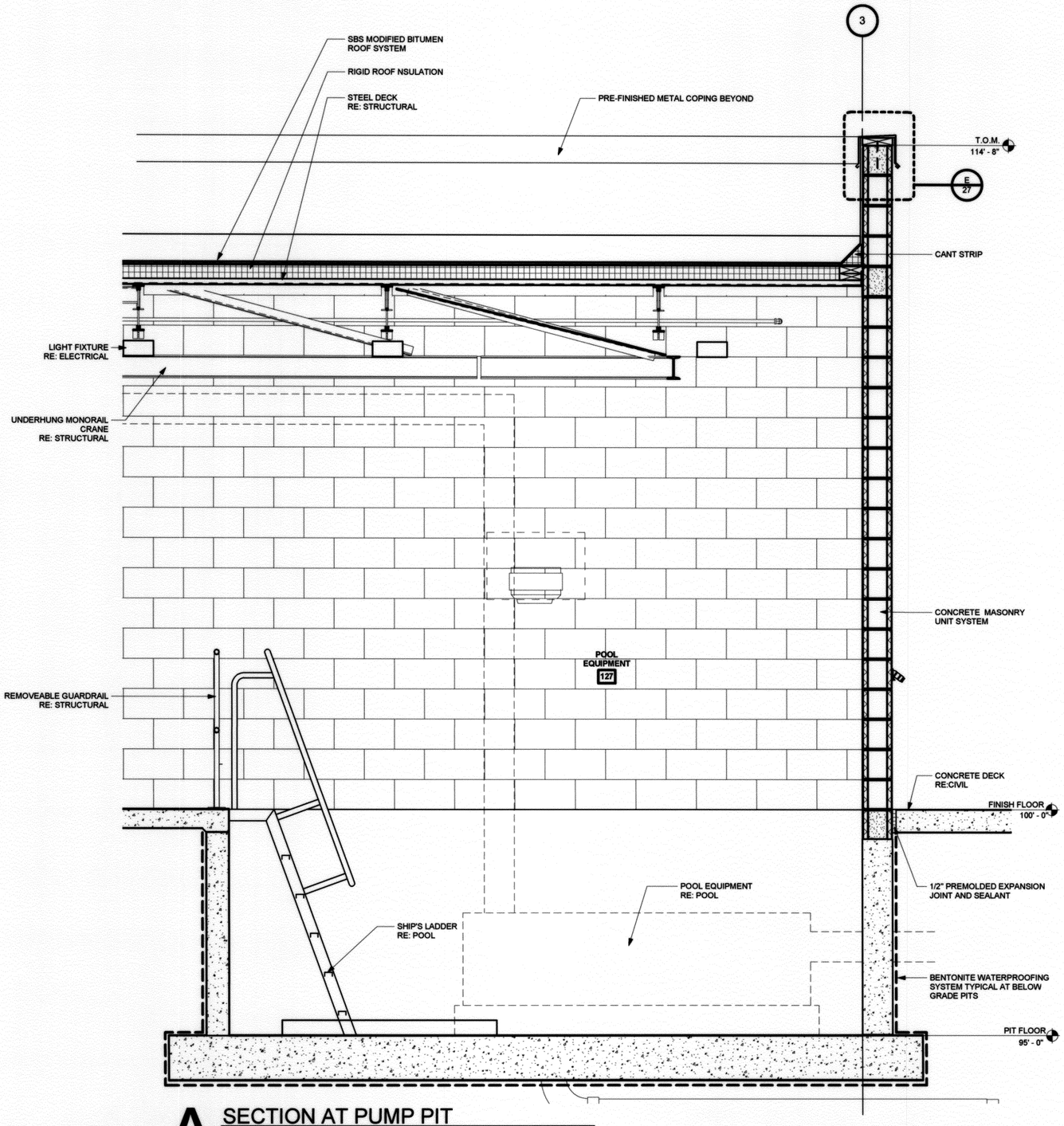

A SECTION AT PUMP PIT
3/4" = 1'-0"

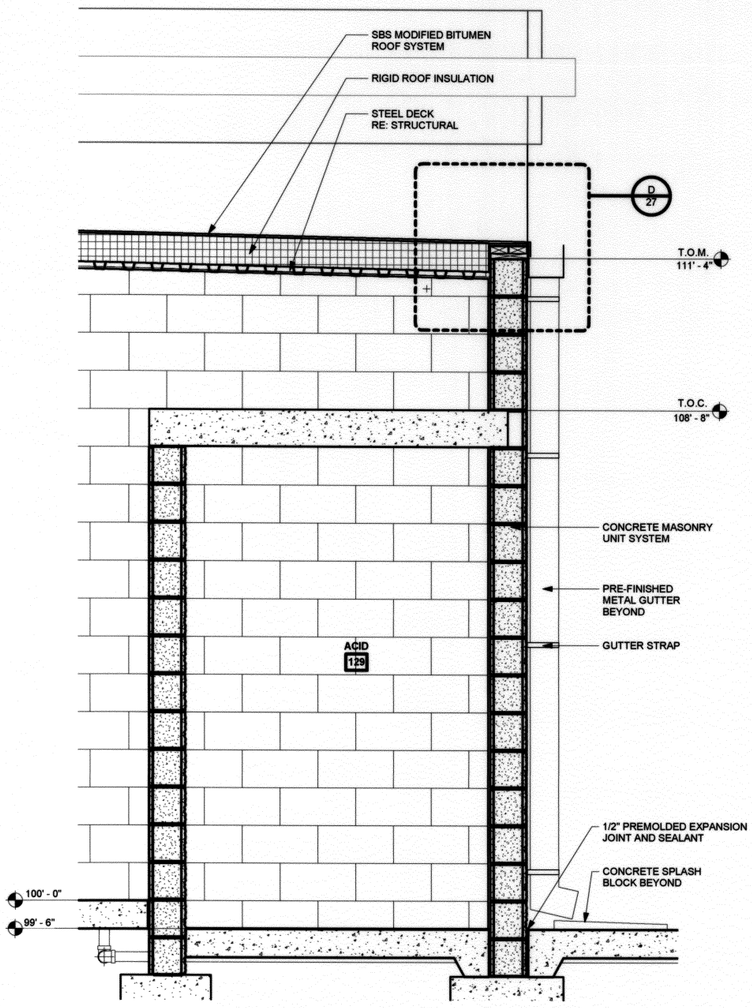

B SECTION AT ACID
3/4" = 1'-0"

STATE OF OKLAHOMA
MICHAEL RAY HALL
No. 3381
TULSA, OK
LICENSED ARCHITECT
10-24-16

GH2 ARCHITECTS

A303 WALL SECTIONS

PROJECT NO. 147400 CONTRACT # 147400

TULSA PARKS DEPARTMENT
LACY POOL RECONSTRUCTION

CITY OF TULSA, OKLAHOMA
ENGINEERING SERVICES DEPARTMENT

PLANS AND ESTIMATES PREPARED BY:
GH2 ARCHITECTS, LLC.

REVISION	BY	DATE

PLAN SCALE: x:1" = ??'
PROFILE SCALE:
HORIZONTAL: x:1" = ??'
VERTICAL x:1" = ?'

DRAWN	NS	10/24/2016
DESIGNED	BT	10/24/2016
SURVEY		
PROJ. MGR.		
LEAD ENGR.		
FIELD MGR.		
RECOMMENDED DESIGN MANAGER		

APPROVED: CITY ENGINEER

FILE: DRAWING:A303

DATE: 11.1.16

ATLAS PAGE NO: 116

SHEET 25 OF 74 SHEETS

10/27/2016 10:13:25 AM

© 2016 COPYRIGHT GH2 ARCHITECTS, LLC

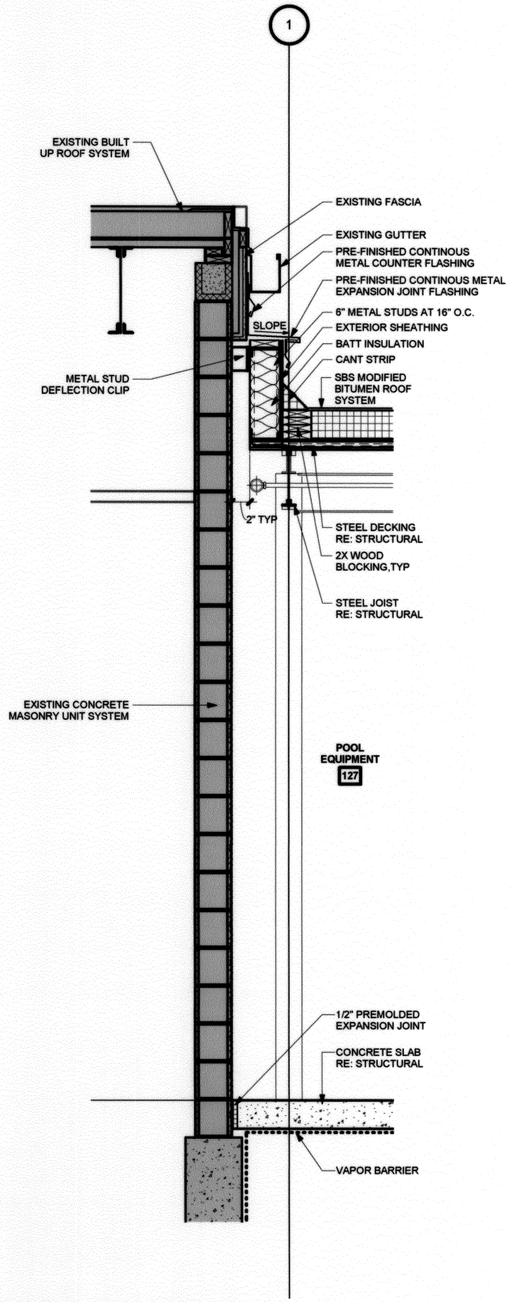

A SECTION AT ROOF

3/4" = 1'-0"

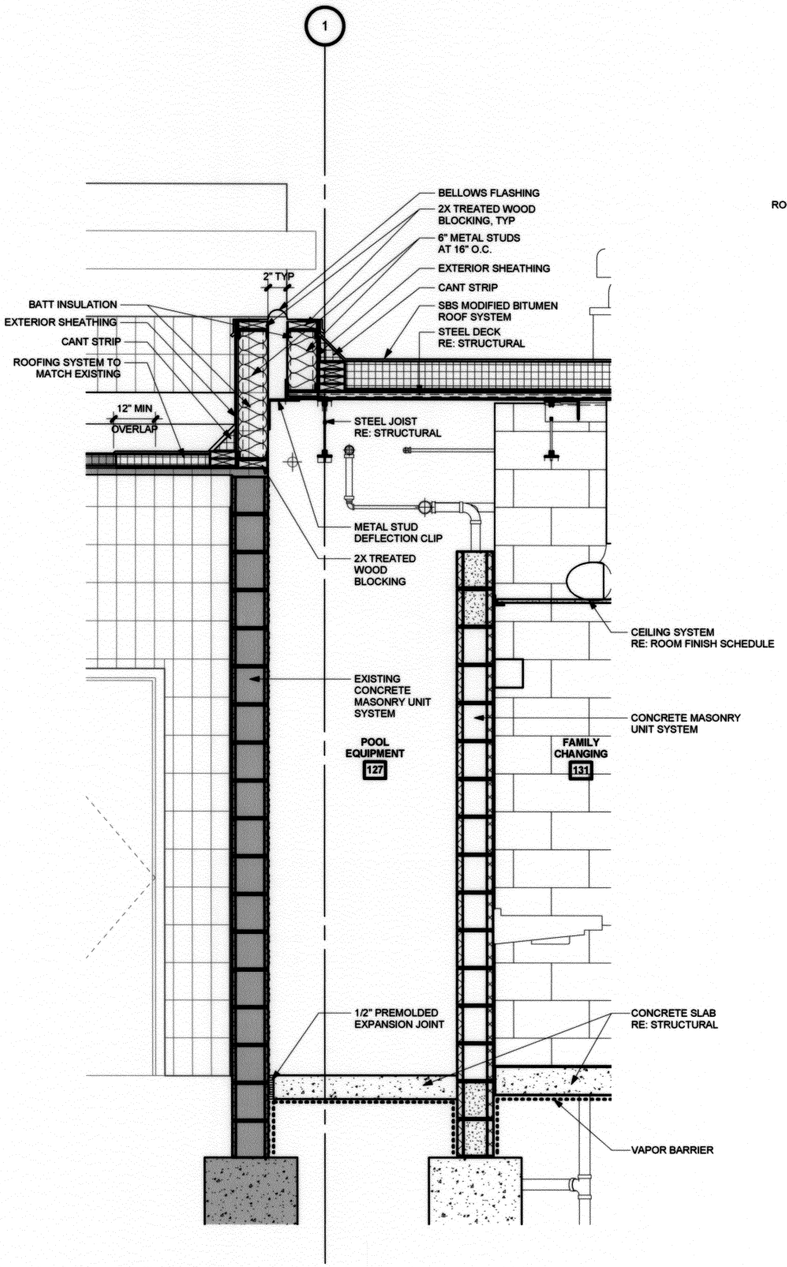

B SECTION AT ROOF

3/4" = 1'-0"

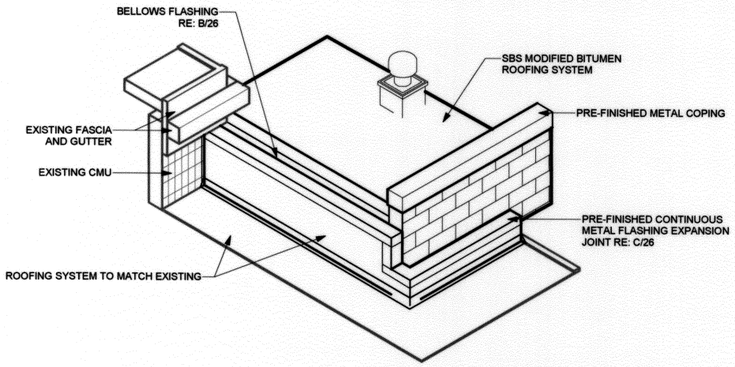

D PARAPET ISO

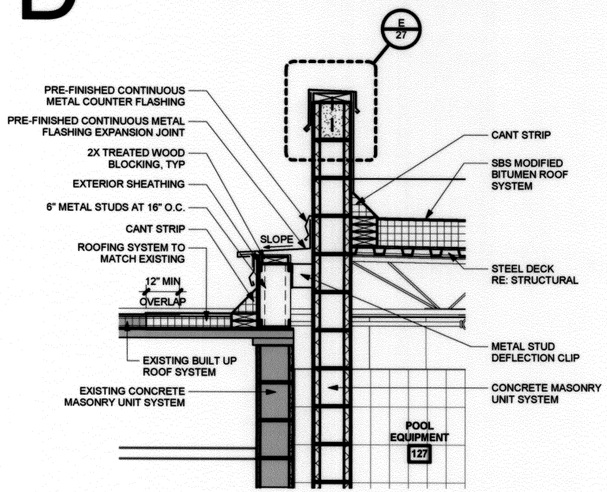

C SECTION AT POOL EQUIPMENT AND WOMEN'S

3/4" = 1'-0"

STATE OF OKLAHOMA
MICHAEL RAY HALL
No. 3381
TULSA, OK
LICENSED ARCHITECT

10-24-16

GH2 ARCHITECTS

A304 WALL SECTIONS

PROJECT NO. 147400 CONTRACT # 147400

TULSA PARKS DEPARTMENT
LACY POOL RECONSTRUCTION

CITY OF TULSA, OKLAHOMA
ENGINEERING SERVICES DEPARTMENT

PLANS AND ESTIMATES PREPARED BY:
GH2 ARCHITECTS, LLC.

REVISION	BY	DATE

PLAN SCALE: x;1" = ??	DRAWN	NS	10/24/2016
	DESIGNED	BT	10/24/2016
	SURVEY		
PROFILE SCALE:	PROJ. MGR.		
HORIZONTAL: x;1" = ??	LEAD ENGR.		
	FIELD MGR.		
VERTICAL x;1" = ?	RECOMMENDED:		
	DESIGN MANAGER		
FILE:	DRAWING: Designer		
ATLAS PAGE NO: 116			

APPROVED:

CITY ENGINEER

DATE: 11.11.16

SHEET 26 OF 74 SHEETS

10/27/2016 10:13:28 AM

© 2016 COPYRIGHT GH2 ARCHITECTS, LLC

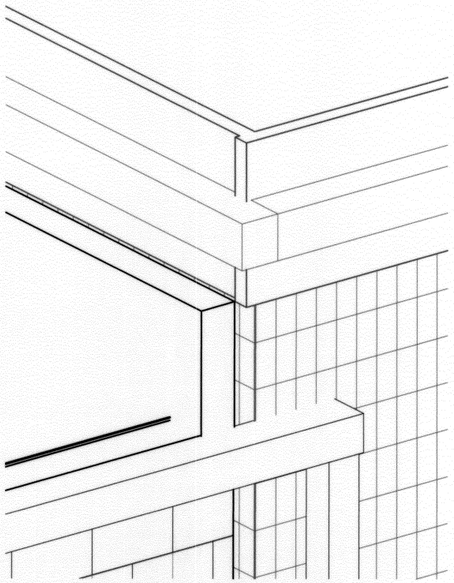

F ROOF FLASHING ISOMETRIC

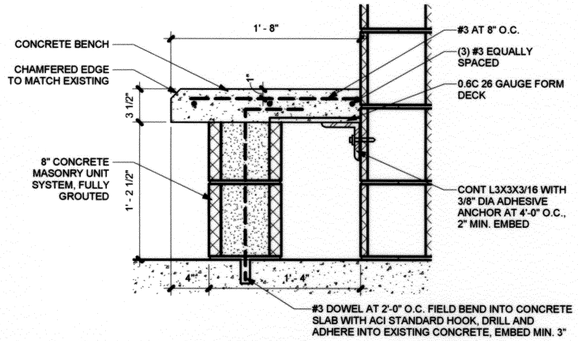

H DETAIL AT BENCH

1 1/2" = 1'-0"

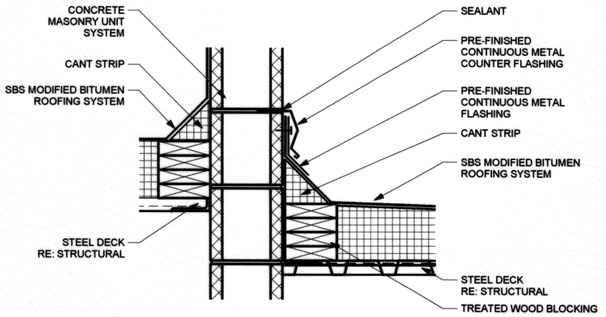

G DETAIL AT ROOF MEMBRANE TERMINATION

1 1/2" = 1'-0"

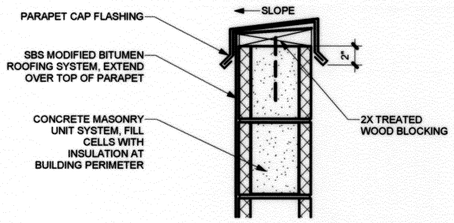

E DETAIL AT PARAPET CAP

1 1/2" = 1'-0"

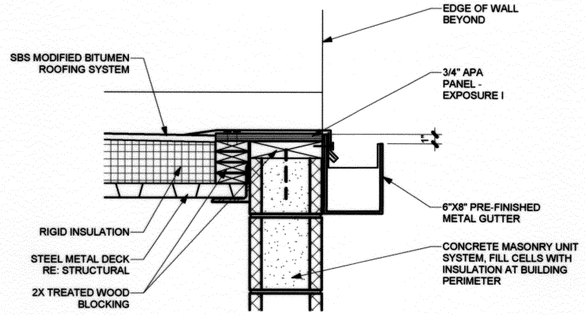

D DETAIL AT GUTTER AND SCUPPER

1 1/2" = 1'-0"

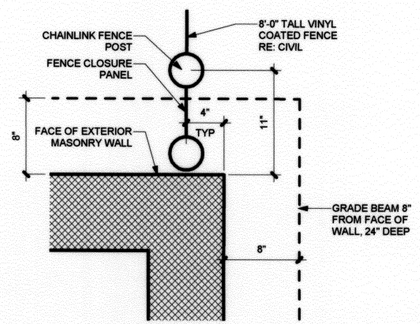

C DETAIL AT FENCE POST TO CMU

1 1/2" = 1'-0"

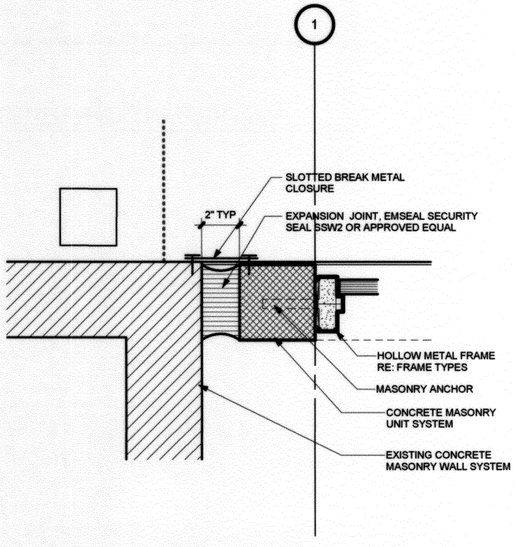

B DETAIL OF EXPANSION JOINT

1 1/2" = 1'-0"

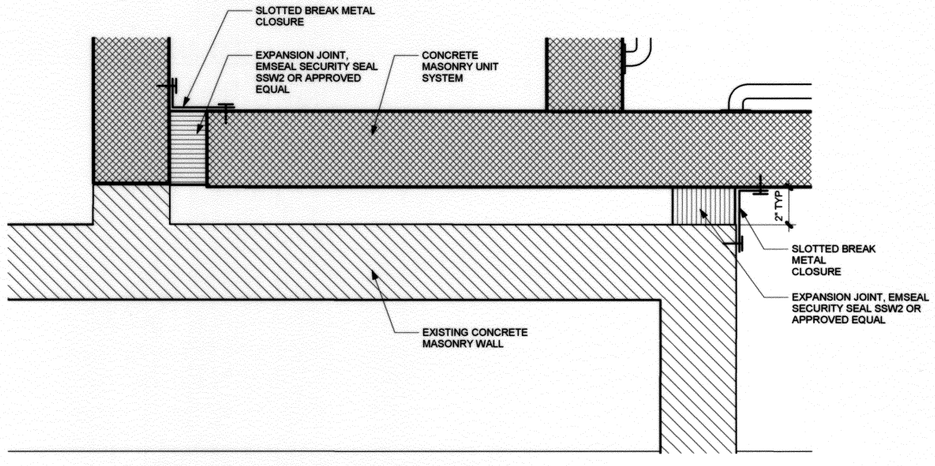

A DETAIL OF EXPANSION JOINT AT FAMILY CHANGING

1 1/2" = 1'-0"

STATE OF OKLAHOMA
MICHAEL RAY HALL
No. 3381
TULSA, OK
LICENSED ARCHITECT

10-24-16

GH2 ARCHITECTS

A501 DETAILS

PROJECT NO. 147400 CONTRACT # 147400

TULSA PARKS DEPARTMENT
LACY POOL RECONSTRUCTION

CITY OF TULSA, OKLAHOMA
ENGINEERING SERVICES DEPARTMENT

PLANS AND ESTIMATES PREPARED BY:
GH2 ARCHITECTS, LLC.

REVISION	BY	DATE

PLAN SCALE: x:1" = ??	DRAWN	NS	10/24/2016	APPROVED:
	DESIGNED	BT	10/24/2016	
	SURVEY			
PROFILE SCALE:	PROJ. MGR.			
	LEAD ENGR.			
HORIZONTAL: x:1" = ??	FIELD MGR.			
	RECOMMENDED			
VERTICAL x:1" = ?	DESIGN MANAGER			CITY ENGINEER
FILE:	DRAWING: A501			DATE: 11.11.16
ATLAS PAGE NO: 116				SHEET 27 OF 74 SHEETS

10/27/2016 10:13:31 AM

© 2016 COPYRIGHT GH2 ARCHITECTS, LLC

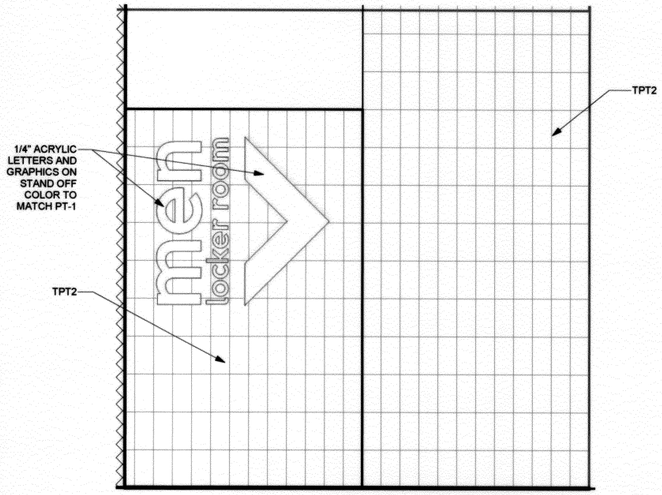

H LOCKER ROOM SIGNAGE
3/4" = 1'-0"

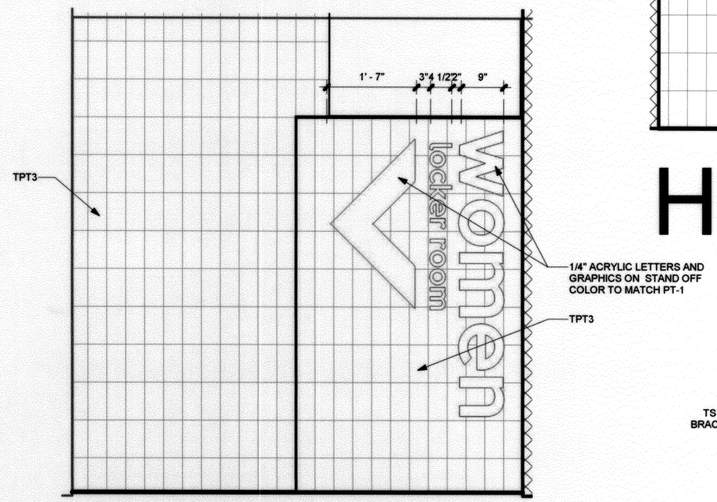

G LOCKER ROOM SIGNAGE
3/4" = 1'-0"

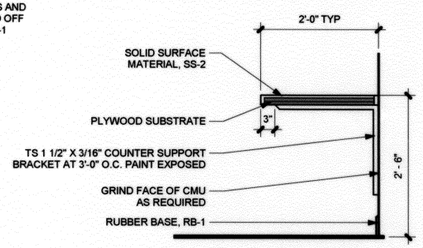

F MILLWORK SECTION SIDE
3/4" = 1'-0"

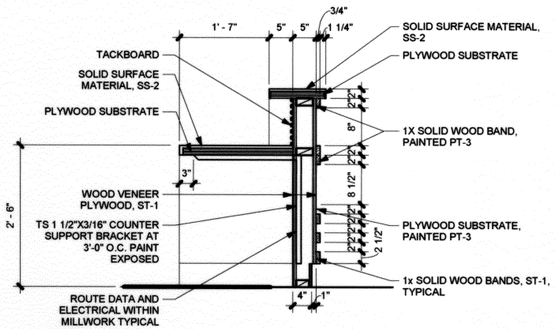

E MILLWORK FRONT SECTION
3/4" = 1'-0"

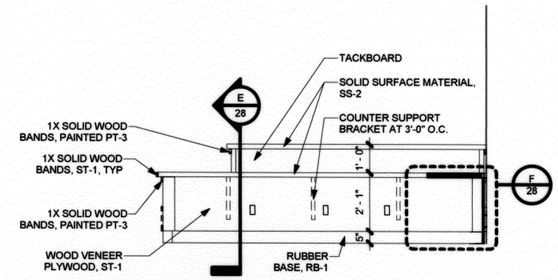

D MILLWORK ELEVATION NORTH
3/8" = 1'-0"

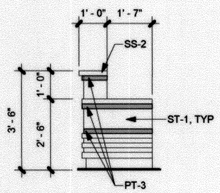

C MILLWORK ELEVATION SOUTH
3/8" = 1'-0"

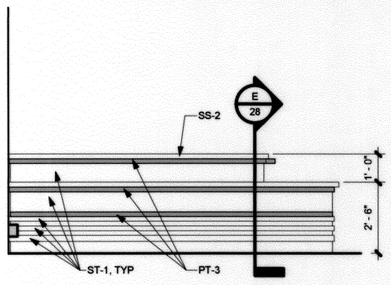

B MILLWORK ELEVATION WEST
3/8" = 1'-0"

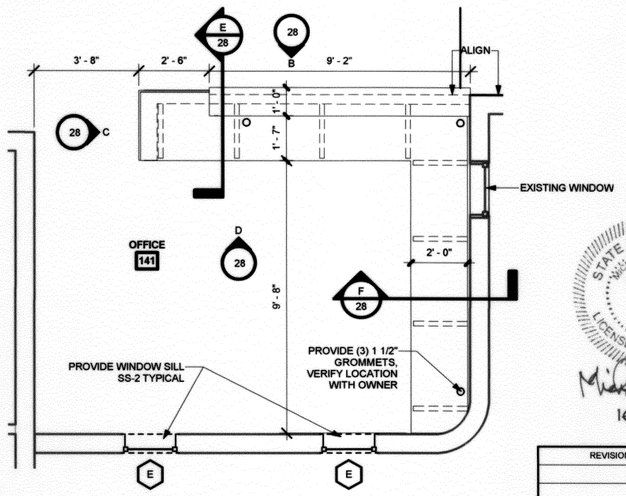

A OFFICE MILLWORK PLAN ALTERNATE A6
3/8" = 1'-0"

STATE OF OKLAHOMA
MICHAEL RAY HALL
No. 3381
TULSA, OK
LICENSED ARCHITECT
10-24-16

GH2 ARCHITECTS

A502 DETAILS

PROJECT NO. 147400 CONTRACT # 147400

TULSA PARKS DEPARTMENT
LACY POOL RECONSTRUCTION

CITY OF TULSA, OKLAHOMA
ENGINEERING SERVICES DEPARTMENT

PLANS AND ESTIMATES PREPARED BY:
GH2 ARCHITECTS, LLC.

REVISION	BY	DATE

PLAN SCALE: x;1" = ??'	DRAWN	NS	10/24/2016	APPROVED:
	DESIGNED	BT	10/24/2016	
	SURVEY			
PROFILE SCALE:	PROJ. MGR.			
	LEAD ENGR.			
HORIZONTAL: x;1" = ??'	FIELD MGR.			
	RECOMMENDED: DESIGN MANAGER			CITY ENGINEER
VERTICAL x;1" = ?'	FILE: DRAWING: Designer		DATE: 11.11.16	
	ATLAS PAGE NO: 116		SHEET 28 OF 74 SHEETS	

10/27/2016 10:13:34 AM

© 2016 COPYRIGHT GH2 ARCHITECTS, LLC

GENERAL STRUCTURAL NOTES

A. DESIGN CRITERIA

1. BUILDING CODE: INTERNATIONAL BUILDING CODE (IBC), 2015 EDITION, INCLUDING LOCAL SUPPLEMENTS. THIS STRUCTURE IS CLASSIFIED AS AN OCCUPANCY CATEGORY III FACILITY.

2. DEAD AND LIVE LOADS:

LOCATION	UNIFORM LIVE LOAD	CONCENTRATED LIVE LOAD	TOTAL DEAD LOAD
ROOF	20 PSF	------	20 PSF
SLAB ON GRADE	100 PSF	2000 LB	------

3. SNOW LOADS:

GROUND SNOW LOAD:	10 PSF
FLAT ROOF SNOW LOAD:	11 PSF
SNOW EXPOSURE FACTOR:	1.0
SNOW IMPORTANCE FACTOR:	1.1
THERMAL FACTOR:	1.0

DRIFTING OF SNOW AND UNBALANCED SNOW SHALL BE IN ACCORDANCE WITH CODE.

4. LATERAL LOADS (PER ASCE 7):

A. WIND:

ULTIMATE WIND SPEED:	120 MPH (3 SECOND GUST & ASD METHOD)
WIND EXPOSURE:	C
INTERNAL PRESSURE COEF:	+/- 0.18

COMPONENTS AND CLADDING PRESSURE SHALL BE USED FOR DESIGN OF EXTERIOR WALLS, WINDOWS, DOORS, AND MISCELLANEOUS MATERIALS NOT SPECIFICALLY SHOWN ON THE PLANS.

B. SEISMIC:

SITE CLASS:	C
SEISMIC DESIGN CATEGORY:	B
SEISMIC IMPORTANCE FACTOR:	1.25
Ss:	0.161
S1:	0.067
Sds:	0.172
Sd1:	0.107
LATERAL SYSTEM:	INTERMEDIATE REINF. MASONRY SHEAR WALL (R=3.5)
METHOD OF ANALYSIS:	EQUIVALENT LATERAL FORCE
Cs:	0.061

5. RAIN LOADS:

RAINFALL:	10.8 INCHES (100 YEAR, 1-HOUR RAINFALL)
ROOF LOAD, R:	15.6 PSF

ROOF SLOPES ARE GREATER THAN OR EQUAL TO ¼" PER FOOT, THUS PONDING ANALYSIS PER ASCE 7 OF THE ROOF STRUCTURE IS NOT REQUIRED.

B. CONSTRUCTION DETAILS FOR STRUCTURAL MOVEMENT

1. IT IS THE CONTRACTOR'S RESPONSIBILITY TO PROVIDE ACCOMMODATIONS IN GLAZING, ARCHITECTURAL FINISHES, PLUMBING, HVAC, AND ELECTRICAL ELEMENTS TO PREVENT DAMAGE DUE TO DEFLECTION OF ROOF, WALL AND FLOOR MEMBERS.

2. VERTICAL DEFLECTIONS DUE TO GRAVITY LOADS:

WIDE FLANGE ROOF BEAMS & GIRDERS	LENGTH IN INCHES/240

3. HORIZONTAL DEFLECTIONS DUE TO WIND (W) OR SEISMIC (E):

CONVENTIONAL METAL STUDS	LENGTH IN INCHES/240(W), 200(E)
CONVENTIONAL BUILDING (FLOOR TO ROOF)	HEIGHT IN INCHES/360(W), 200(E)

C. SOIL PREPARATION AND FOUNDATIONS

1. THE FOUNDATION SYSTEM IS DESIGNED AND CONSTRUCTED AS RECOMMENDED IN SECTION 31 2000 EARTH MOVING SPECIFICATION.

2. REMOVE TOP SOIL CONTAINING ORGANIC MATERIAL AND PREPARE THE BUILDING PAD IN ACCORDANCE WITH THE CIVIL ENGINEERING PLANS, SPECIFICATIONS.

3. REMOVE SOIL AS REQUIRED TO ALLOW FOR A LOW VOLUME CHANGE ZONE 3'-0" THICK UNDER THE FLOOR SLAB AND DRAINAGE MATERIAL. FILL TO SUBGRADE ELEVATION SHOWN ON THE DRAWINGS WITH NON-EXPANSIVE FILL OR STABILIZED SOIL PER SPECIFICATION.

4. SOIL SUPPORTED FOUNDATIONS:

A. DESIGN BEARING PRESSURE (NET) IS 2000 PSF FOR FOUNDATIONS BEARING ON UNDISTURBED SOIL OR APPROVED ENGINEERED FILL MATERIAL. BEARING MATERIALS SHALL BE VERIFIED BY A LICENSED GEOTECHNICAL ENGINEER.

B. ALL FOUNDATIONS ARE DESIGNED WITH EARTH FORMED SIDES; THE TOP 7 1/4" OF THE FOUNDATION SHALL BE FORMED TO THE DESIGN DIMENSION WHEN VISIBLE AFTER CONSTRUCTION IS COMPLETE. THE CONSTRUCTED FOUNDATION DIMENSION SHALL BE NO LESS THAN THE DESIGN DIMENSION, AND NO MORE THAN 6" GREATER THAN THE DESIGN DIMENSION.

D. CONCRETE

1. ALL CONCRETE HAS BEEN DESIGNED IN ACCORDANCE WITH ACI 318 AND THE BUILDING CODE, AND IN CONFORMANCE WITH THE CURRENT "ACI MANUAL OF CONCRETE PRACTICE."

2. THE CONCRETE REQUIREMENTS ARE:

A. CEMENT SHALL BE TYPE I OR II CONFORMING TO ASTM C150. FLY ASH CONFORMING TO ASTM C618 TYPE C OR F MAY BE USED TO REPLACE A MAXIMUM OF 20% OF THE CEMENT.

B. FINE AGGREGATE FOR NORMAL WEIGHT CONCRETE SHALL MEET ASTM C33.

C. COARSE AGGREGATES FOR NORMAL WEIGHT CONCRETE SHALL CONFORM TO ASTM C33, GRADE 67 OR LARGER. COARSE AGGREGATES SHALL BE NO LESS THAN 50% OF THE TOTAL AGGREGATE BY WEIGHT, UNLESS APPROVED BY THE ENGINEER PRIOR TO MIX DESIGN SUBMITTAL.

D. MIX REQUIREMENTS ARE:

LOCATION	MIN. F'C PSI	MIN. CEM. PCY	MAX. W/C RATIO	AIR CONTENT	SLUMP§ INCHES
GRADE BEAMS	4000	470	0.45	5%±1%	2-5
INTERIOR SLAB	4000	564	0.42	3% MAX.	2-5

§ PRIOR TO THE ADDITION OF WATER REDUCING ADMIXTURES, IF APPROVED BY ENGINEER, AFTER ADDITION THE SLUMP MAY NOT EXCEED 8".

F'C SPECIFIED IS BASED ON THE 28 DAY COMPRESSIVE STRENGTH IN ACCORDANCE WITH ACI 318 ACCEPTANCE CRITERIA.

3. ADMIXTURES, HARDENERS, & CURING COMPOUNDS

A. ALL CONCRETE ADMIXTURES SHALL, WHEN MIXED INTO CONCRETE, BE NON-CHLORIDE AND NON-CHLORIDE FORMING.

B. ALL ADMIXTURES MUST CONFORM TO ASTM C-494 AND C-260.

C. CONCRETE CURING COMPOUND AND SEALERS SHALL MEET ASTM C-309 TYPE 1 OR 1D

D. THE CONTRACTOR SHALL VERIFY THAT ALL ADMIXTURES, HARDENERS, CURING COMPOUNDS, AND FLOOR COVERING ADHESIVES ARE COMPATIBLE WITH EACH OTHER.

4. MISCELLANEOUS CONCRETE DETAILS:

A. ALL EXPOSED EDGES OF CONCRETE SHALL BE CHAMFERED 3/4" INSIDE FORMS OR TOOLED TO 3/4" RADIUS UNLESS NOTED OTHERWISE.

B. THE CONTRACTOR SHALL BE RESPONSIBLE FOR THE DESIGN OF ALL FORMING AND SHORING.

5. WHEN THE CONCRETE WILL HAVE MOISTURE SENSITIVE FLOOR COVERING, THE CONTRACTOR SHALL COORDINATE THE CURING TIME TO ALLOW THE MOISTURE VAPOR TRANSMISSION TO REDUCE TO THE LEVEL THAT THE ADHESIVE MANUFACTURER WILL GUARANTEE THE INSTALLATION. THE CONTRACTOR SHALL HAVE THE FLOOR COVERING INSTALLER TEST THE MOISTURE VAPOR TRANSMISSION OR USE AN ADHESIVE DESIGNED FOR THE RATE OF VAPOR TRANSMISSION OCCURRING AT THE TIME OF INSTALLATION.

E. CONCRETE REINFORCING

1. MATERIALS:

	ASTM	GRADE
PLATE & ANGLE	A36	---
REINFORCING STEEL:	A615	60
ANCHOR RODS (BOLTS):	F1554	36

2. DETAILS:

A. WELDING OF REINFORCING STEEL IS PROHIBITED UNLESS NOTED OTHERWISE. WHEN WELDING IS APPROVED, WELDING SHALL BE IN ACCORDANCE WITH AWS D1.4 "WELDING REINFORCING STEEL, ETC."

B. SHOP DRAWINGS SHALL BE SUBMITTED WITH REINFORCING STEEL IN ACCORDANCE WITH ACI 315.

3. PLACEMENT

A. ALL REINFORCING AND EMBEDMENTS SHALL BE SUPPORTED ON CHAIRS/BOLSTERS TO THE DESIGN DIMENSIONS. SPACING SHALL BE SUFFICIENTLY CLOSE TO PREVENT DISPLACEMENT OR PERMANENT DEFORMATION DUE TO CONCRETE PLACEMENT, FOOT TRAFFIC, OR VIBRATION. "PUDDLING IN" OR "PULLING UP" REINFORCING IS NOT AN ACCEPTABLE METHOD FOR PLACING REINFORCING. CHAIRS/BOLSTERS SHALL HAVE PLASTIC COATED FEET OR BE MADE OF STAINLESS STEEL. CHAIRS/BOLSTERS IN CONTACT WITH EARTH SHALL HAVE BOTTOM PLATES AND BE COATED TO PREVENT CORROSION. ANCHOR RODS SHALL BE HELD IN PLACE WITH TEMPLATES SUFFICIENTLY STRONG TO PREVENT DISPLACEMENT OR TILTING.

B. MAINTAIN ACI CLEAR COVER ON REINFORCING AS LISTED BELOW UNLESS NOTED OTHERWISE.

CAST AGAINST EARTH (BOTTOM OR SIDES):	3"
FORMED - EXPOSED TO SOIL, WEATHER OR LIQUIDS:	2"
SLABS ON GRADE (FROM TOP OF SLAB):	1.5"

C. PROVIDE CORNER BARS OF THE SAME SIZE AND SPACING AS ADJACENT REINFORCING.

D. OPENINGS IN WALLS OR SLABS SHALL BE REINFORCED PER DETAIL 6/S0.3.

E. REINFORCING STEEL SHALL BE LAPPED PER TABLE A.

F. STRUCTURAL STEEL

1. STRUCTURAL STEEL SHALL MEET THE LATEST "CODE OF STANDARD PRACTICE FOR STEEL BUILDINGS AND BRIDGES," AND HAS BEEN DESIGNED IN ACCORDANCE WITH THE BUILDING CODE AND THE LATEST EDITION OF AISC "MANUAL OF STEEL CONSTRUCTION."

2. STRUCTURAL STEEL SHALL BE NEW AND MEET THE FOLLOWING REQUIREMENTS UNLESS NOTED OTHERWISE ON THE DRAWINGS:

TYPE	ASTM	GRADE
W & WT SHAPES	A992	------
PLATES, CHANNELS & ANGLES	A36	------
RECTANGULAR HSS SECTIONS	A500	B (Fy = 46 KSI)
STRUCTURAL BOLTS	A325	------ (ASTM F1852)
ERECTION BOLTS	A307	------

3. ALL BOLTED CONNECTIONS SHALL BE STANDARD AISC BEARING TYPE FRAMING CONNECTIONS. BOLTS SHALL BE TENSION-INDICATING FOR INSPECTION PURPOSES.

4. ALL CONNECTIONS NOT DETAILED OR OTHERWISE NOTED SHALL BE PROVIDED BY THE FABRICATOR AND HIGHLIGHTED FOR THE ENGINEER OF RECORD'S REVIEW.

5. ALL WELDING SHALL BE IN ACCORDANCE WITH LATEST AWS CODE, SECTION D1.1. ALL WELD MATERIAL SHALL BE 70 KSI TENSILE STRENGTH.

6. OPENINGS SHALL NOT BE FIELD-CUT IN THE FLANGE OR WEBS OF STEEL MEMBERS.

G. STEEL JOISTS

1. STEEL JOISTS SHALL MEET THE LATEST STEEL JOIST INSTITUTE AND AISC JOIST SPECIFICATIONS, AND SHALL BE FABRICATED BY A MEMBER OF THE SJI.

2. STEEL JOIST SPACING SHALL BE AS SHOWN ON PLANS.

3. ALL STEEL JOIST BEARING CONNECTIONS SHALL BE WELDED UNLESS NOTED OTHERWISE.

A. PROVIDE ERECTION BOLTS AT LOCATIONS PER SJI SPECIFICATIONS.

4. WHERE JOIST BEARING CONDITIONS REQUIRE NON-STANDARD BEARING ENDS, JOIST FABRICATOR SHALL PROVIDE SPECIAL BEARING ENDS AS REQUIRED TO ACCOMMODATE SUCH CONDITIONS.

5. SUSPENSION OF ANY MISCELLANEOUS ITEMS FROM JOISTS SHALL BE ONLY AT TOP OR BOTTOM CHORD PANEL POINTS UNLESS INDICATED OTHERWISE.

6. JOIST FABRICATOR SHALL PROVIDE JOIST BRIDGING PER SJI RECOMMENDATIONS. REF. PLANS AND DETAILS FOR SPECIAL BRIDGING AND BRACING REQUIREMENTS.

A. DESIGN ALL STEEL ROOF JOISTS AND BRIDGING FOR A NET UPLIFT PRESSURE OF 22.5 PSF. BRIDGING LOCATIONS TO BE DETERMINED BY JOIST SUPPLIER PER SJI RECOMMENDATIONS.

7. JOISTS SHALL BE DESIGNED BY THE MANUFACTURER FOR ALL LOADING CONDITIONS AND TABLES PER SJI AND, IN ADDITION, ANY SPECIAL OR APPLIED LOADS AS MAY BE INDICATED IN THE DRAWINGS. JOIST MANUFACTURER SHALL NOT DESIGN JOISTS FOR LESS THAN LOADS SPECIFIED IN SJI CAPACITY TABLES FOR JOIST DESIGNATION SHOWN ON PLANS.

A. JOIST EXTENSIONS SHALL BE DESIGNED FOR THE SAME LOADS AS THE MAIN JOIST SPAN UNLESS NOTED OR DETAILED OTHERWISE.

8. UNLESS SPECIFICALLY NOTED, JOIST SIZES INDICATED ARE FOR UNIFORMLY APPLIED LOADS. MANUFACTURER SHALL PROVIDE JOIST CAPACITY TO SUPPORT SPECIAL LOADS AS NOTED ON PLANS.

9. GENERAL CONTRACTOR IS RESPONSIBLE FOR COORDINATING ROUTING OF MECHANICAL OR ELECTRICAL COMPONENTS WITH JOIST BRIDGING AND/OR JOIST WEB MEMBERS PRIOR TO JOIST FABRICATION.

H. STEEL DECKING

1. DECK SHALL BE ATTACHED TO ALL SUPPORTING MEMBERS PER ONE OF THE FOLLOWING:

A. ATTACH METAL DECK TO STEEL MEMBERS WITH 5/8" DIA. PUDDLE WELDS. USE WELDING WASHERS FOR DECKS THINNER THAN 22 GAUGE. WELDS SHALL BE IN ACCORDANCE WITH THE CURRENT STANDARDS OF THE AWS. REF. DECK ATTACHMENT DETAIL.

B. SIDE LAPS OF METAL DECK SHALL BE FASTENED TOGETHER WITH #10 TEK SCREWS WITH METAL IN FULL CONTACT. REF. DECK ATTACHMENT DETAIL.

2. STEEL ROOF DECK SHALL BE 1 1/2" DEEP, 22 GA., WIDE RIB METAL DECKING WITH THE FOLLOWING PROPERTIES:

MINIMUM Fy:	33 KSI
MINIMUM I:	0.169 IN4
MINIMUM Sp:	0.186 IN3
MINIMUM Sn:	0.192 IN3

ROOF DECK SHALL RECEIVE FINISH PER SPECIFICATION. DECK SHALL BE CONTINUOUS OVER A MINIMUM OF THREE SPANS. EACH DECK UNIT SHALL BE ATTACHED TO SUPPORTING MEMBERS AND ADJACENT PANELS PER THE DIAPHRAGM ATTACHMENT DETAIL.

3. PROVIDE ANGLE FRAME TO SUPPORT METAL DECK AT ALL ROOF DRAINS AND OTHER OPENINGS GREATER THAN 8" X 8". OPENINGS SMALLER THAN 8" REQUIRE NO REINFORCEMENT.

I. COLD-FORMED STEEL FRAMING

1. ALL COLD-FORMED STEEL STUDS SHALL BE GALVANIZED PER AISI STANDARDS. APPLY ZINC-RICH PAINT TO ALL AREAS WHERE FINISH IS DAMAGED DUE TO WELDING.

2. THIS STRUCTURE IS DESIGNED AS CONVENTIONAL FIELD FRAMED CONSTRUCTION. SHOULD PANELIZED CONSTRUCTION BE USED, THE CONTRACTOR IS SOLELY RESPONSIBLE FOR ALL ENGINEERING, COORDINATION WITH ALL OTHER BUILDING SYSTEMS AND REVIEW OF SHOP DRAWINGS. COORDINATION AND REVIEW OF PANELIZED CONSTRUCTION SHOP DRAWINGS ARE NOT INCLUDED IN THE ENGINEER OF RECORD'S SCOPE OF SERVICES FORTHIS PROJECT. REQUESTS FOR INFORMATION PERTAINING TO, OR DIRECTLY ASSOCIATED WITH, PANELIZED CONSTRUCTION WILL NOT BE REVIEWED.

3. PRODUCTS SHALL BE FORMED FROM STEEL MEETING THE REQUIREMENTS OF AISI, SPECIFICATIONS FOR THE DESIGN OF COLD-FORMED STEEL STRUCTURAL MEMBERS.

4. STUD TRACK SECTIONS SHALL MEET OR EXCEED THICKNESS OF STUD MEMBERS, UNLESS NOTED OTHERWISE.

5. ALL FRAMING COMPONENTS SHALL BE CUT SQUARELY FOR ATTACHMENT TO PERPENDICULAR MEMBERS.

6. PROVIDE ALL ACCESSORIES INCLUDING, BUT NOT LIMITED TO, TRACKS, CLIPS, WEB STIFFENERS, FASTENERS, ANCHORAGE DEVICES, CONNECTION ANGLES, BRIDGING, AND MISCELLANEOUS HARDWARE REQUIRED TO COMPLETE ALL CONNECTIONS AND INSTALLATION.

7. FASTENING OF FRAMING COMPONENTS SHALL BE WITH SELF-TAPPING SCREWS OR WELDING OF SUFFICIENT SIZE TO INSURE THE STRENGTH OF THE CONNECTION. WELDS SHALL BE PERFORMED IN ACCORDANCE WITH THE LATEST AWS D1.3 CODE.

8. COLD-FORMED STEEL STUD PRODUCTS SHALL BE MANUFACTURED BY A CURRENT MEMBER OF THE STEEL STUD MANUFACTURERS ASSOCIATION (SSMA).

A. THE PHYSICAL AND STRUCTURAL PROPERTIES SHALL BE EQUIVALENT TO THOSE LISTED BY THE SSMA "PRODUCT TECHNICAL INFORMATION" AND ICBO ER-4943P FOR "S" AND "T" SECTIONS. COMPOSITE CONSTRUCTION IS NOT PERMITTED WITHOUT PRIOR APPROVAL BY THE ENGINEER OF RECORD.

B. COLD FORMED METAL STUDS FORMING THE EXTERIOR WALLS SHALL HAVE THE FOLLOWING PROPERTIES, UNLESS NOTED OR DETAILED OTHERWISE:

VERTICAL SPAN	SPA IN.	DESIGNATION	MIN. YLD. KSI
LESS THAN 14 FEET	16	600S162-33	33

C. PROVIDE WALL STUD BRIDGING SPACED AT 4'-0" O.C., MAX. IN ALL EXTERIOR WALLS AND INTERIOR, LOAD BEARING WALLS.

D. PROVIDE DEFLECTION TRACK AT THE TOP OF ALL NON-LOAD BEARING STUD WALLS WHERE THE TOP OF WALL ABUTS THE BOTTOM OF THE STRUCTURE. DEFLECTION TRACK SHALL ACCOMMODATE A DEFLECTION DESCRIBED UNDER CONSTRUCTION DETAILS FOR STRUCTURAL MOVEMENT.

E. ATTACH STUDS TO TRACK WITH A MINIMUM OF ONE SCREW IN EACH STUD FLANGE, UNLESS NOTED OTHERWISE.

J. POST INSTALLED ANCHORING SYSTEMS

1. SUBSTITUTION OF POST INSTALLED ANCHORS FOR EMBEDDED ANCHORS SHOWN ON THE DRAWINGS WILL NOT BE PERMITTED UNLESS APPROVED BY THE ENGINEER IN ADVANCE.

2. ANCHORS SHALL BE INSTALLED IN ACCORDANCE WITH THE MANUFACTURER'S PRINTED INSTALLATION INSTRUCTIONS (MPII) AND THE EVALUATION REPORT (ER/ESR) SPECIFIED INCLUDING HOLE PREPARATION, TEMPERATURE AND MOISTURE CONDITIONS.

3. POWDER ACTUATED FASTENERS

A. WHEN CALLED FOR ON THE PLANS, THE APPROVED ANCHORS ARE:

MANUFACTURER AND PRODUCT	USE	ICC
HILTI X-GN (1" EMBED)	METAL STUD TRACK TO CONCRETE	ESR-1752
HILTI X-EGN	METAL STUD TRACK TO STEEL	ESR-1752
HILTI* X-EDNK22 THQ12(1/8≤t≤1/4)	METAL DECK TO STEEL	ESR-2197
X-EDN-19 THQ12(3/16≤t≤3/8)		ESR-2776
X-ENP-19 L15(t≥1/4)		

* ALL FASTENERS SHALL MEET THE MINIMUM FULLY SEATED DEPTH INDICATED BY THE HILTI DEPTH GAUGE. NO EXCEPTIONS WILL BE APPROVED.

PEC
PROFESSIONAL ENGINEERING CONSULTANTS, P.A.
CHEROKEE BUILDING
4150 S. 100TH E. AVE., SUITE 401
TULSA, OK 74146
918-664-5400
www.pec1.com

GH2 ARCHITECTS

GEOFFREY K. BLISS 24966 LICENSED PROFESSIONAL ENGINEER
10/24/16

S001 GENERAL NOTES

PROJECT NO. 147180 CONTRACT # 147180

TULSA PARKS DEPARTMENT
LACY POOL RECONSTRUCTION

CITY OF TULSA, OKLAHOMA
ENGINEERING SERVICES DEPARTMENT

PLANS AND ESTIMATES PREPARED BY:
GH2 ARCHITECTS, LLC.

REVISION	BY	DATE

PLAN SCALE: x:1" = 7'
PROFILE SCALE: HORIZONTAL: x:1" = 7' VERTICAL x:1" = 7'

DRAWN	CTM	10/24/2016
DESIGNED	CTM	10/24/2016
SURVEY		
PROJ. MGR.	GKB	10/16
LEAD ENGR.		
FIELD MGR.	BM	10/16
RECOMMENDED	HAS	10/16
DESIGN MANAGER		

APPROVED: CITY ENGINEER

FILE: DRAWING: S001
DATE: 11.4.16
ATLAS PAGE NO: 116
SHEET 29 OF 74 SHEETS

11/10/2016 11:30:35 AM

K. CONTRACT/CONSTRUCTION DOCUMENTS

1. THE CONTRACTOR SHALL BE RESPONSIBLE TO OBTAIN A FULL SET OF THE MOST RECENT REVISIONS OF EACH DOCUMENT INCLUDING ALL PLANS, SPECIFICATIONS, ADDENDAS, AND SUPPLEMENTAL INSTRUCTIONS.
2. THE CONTRACTOR SHALL REVIEW THE DOCUMENTS PRIOR TO FABRICATION AND/OR INSTALLATION OF ANY MATERIALS FOR CONFLICTS. IF CONFLICTS OCCUR THE CONTRACTOR SHALL USE THE MOST STRINGENT REQUIREMENT OR REQUEST A CLARIFICATION THROUGH A REQUEST FOR INFORMATION (RFI).
3. THE DOCUMENTS MAY NOT BE REPRODUCED IN WHOLE OR IN PART FOR USE ON PROJECTS OTHER THAN IDENTIFIED IN THE TITLE BLOCK. SHOULD THE CONTRACTOR USE THE DOCUMENTS AS A PORTION OF A SHOP DRAWING SUBMITTAL, THE CONTRACTOR SHALL BE RESPONSIBLE FOR ANY CONSEQUENCES RESULTING FROM ERRORS IN THE REPRODUCED DOCUMENTS.
4. DETAILS LABELED TYPICAL ARE INTENDED TO REPRESENT A CONDITION THAT OCCURS AT SEVERAL LOCATIONS IN THE PLANS WHETHER OR NOT THE DETAIL IS REFERENCED.
5. DO NOT SCALE THE PLANS AND DETAILS FOR THE PURPOSE OF ESTABLISHING DIMENSIONS.

L. CONTRACTOR'S RESPONSIBILITY

1. THE CONTRACTOR SHALL BE RESPONSIBLE FOR REVIEWING ALL SUB-CONTRACTOR SUBMITTALS AND NOTING ALL DEVIATIONS FROM THE CONSTRUCTION DOCUMENTS PRIOR TO SUBMITTING TO THE ENGINEER FOR REVIEW.
2. WHEN THE CONTRACTOR BECOMES AWARE OF WHAT MAY BE AN UNFORESEEN CONDITION THAT COULD AFFECT COST OR SCHEDULE, THE CONTRACTOR SHALL NOTIFY THE ENGINEER IN WRITING WITHIN 2 WORKING DAYS. AFTER REVIEW AND ENGINEER'S DETERMINATION THAT AN UNFORESEEN CONDITION EXISTS; THE CONTRACTOR SHALL SUBMIT A CHANGE ORDER REQUEST FOR APPROVAL WITH BOTH COST AND SCHEDULE IMPACT ATTACHED.
3. THE CONTRACTOR'S SCHEDULE MUST PROVIDE A REASONABLE TIME ALLOWANCE FOR THE ENGINEERING REVIEW AND APPROVAL.
4. THE CONTRACTOR WILL BE SOLELY RESPONSIBLE FOR SITE SAFETY. THE ENGINEER IS RESPONSIBLE FOR FOLLOWING THE CONTRACTOR'S CONSTRUCTION SITE SAFETY INSTRUCTIONS PROVIDED IN WRITING. ALTERNATELY THE CONTRACTOR SHALL ASSIGN AN ESCORT TO ADVISE THE ENGINEER OF SITE SAFETY ISSUES DURING SITE VISITS. THE ENGINEER'S PURPOSE OF A SITE VISIT IS SOLELY TO BECOME FAMILIAR WITH THE GENERAL PROGRESS AND QUALITY OF THE PROJECT. THE ENGINEER'S SITE VISIT IS NOT A QUALITY CONTROL FUNCTION.

M. CONSTRUCTION MEANS AND METHODS ISSUES

1. SLABS ON GRADE AND ELEVATED SLABS ARE NOT DESIGNED TO SUPPORT CRANES, FORKLIFTS, TRUCKS, MANLIFTS, OR OTHER CONSTRUCTION RELATED EQUIPMENT UNLESS NOTED AS SUCH. IT IS THE CONTRACTOR'S RESPONSIBILITY TO DETERMINE IF CONSTRUCTION EQUIPMENT CAN BE SAFELY OPERATED ON THESE SLABS AND TO REPAIR ANY DAMAGE THE EQUIPMENT MAY CAUSE.
2. THE CONSTRUCTION DOCUMENTS REPRESENT A STABLE STRUCTURE IN THE COMPLETED FORM. THE CONTRACTOR SHALL PROVIDE ANY TEMPORARY BRACING AND/OR SHORES TO SAFELY CONSTRUCT THE BUILDING AND PREVENT DAMAGE DURING CONSTRUCTION.
3. THE CONTRACTOR SHALL VERIFY ALL DIMENSIONS AND ELEVATIONS OF EXISTING CONSTRUCTION THAT MAY AFFECT THE PROJECT AND REPORT DISCREPANCIES TO THE ENGINEER. ANY DIMENSIONS OR ELEVATIONS THAT IMPACT NEW WORK SHALL BE VERIFIED PRIOR TO FABRICATION OF ANY MATERIAL. EXISTING BUILDING ELEMENTS THAT ARE TO BE ABANDONED THAT INTERFERE WITH NEW CONSTRUCTION SHALL BE REMOVED.
4. WHEN A PIECE OF EQUIPMENT (HVAC, ELECTRICAL, KITCHEN, ETC.) IS PROVIDED THAT IS DIFFERENT THAN THE EQUIPMENT THAT THE STRUCTURE WAS DESIGNED FOR EITHER BY SIZE, WEIGHT OR CONFIGURATION, THE CONTRACTOR SHALL BE RESPONSIBLE FOR ALL COSTS ASSOCIATED WITH THE REMEDY OF THE SITUATION. THOSE COSTS SHALL INCLUDE THE ENGINEERING COSTS TO REDESIGN PORTIONS OF THE STRUCTURE TO ACCOMMODATE THE SUBSTITUTED EQUIPMENT.
5. THE CONTRACTOR SHALL BE RESPONSIBLE FOR THE STRUCTURAL DESIGN AND MATERIALS FOR ATTACHING NON-STRUCTURAL ELEMENTS TO ANY PORTION OF THE STRUCTURE TO RESIST ALL LOADS INCLUDING SEISMIC IN A WAY THAT DOES NOT OVERSTRESS STRUCTURAL MEMBERS. NON-STRUCTURAL ELEMENTS CAN BE FOUND IN EACH OF THE OTHER DISCIPLINES (ARCHITECTURAL, MECHANICAL, ELECTRICAL, ETC.).

N. STRUCTURAL TESTS, INSPECTIONS, AND QUALITY ASSURANCE

ALL STRUCTURAL TESTS AND INSPECTIONS SHALL BE PERFORMED PER CHAPTER 17 OF THE BUILDING CODE WITH LOCAL SUPPLEMENTS, UNLESS MORE STRINGENT REQUIREMENTS ARE SPECIFIED.

O. MASONRY

1. MASONRY HAS BEEN DESIGNED IN ACCORDANCE WITH THE ACI 530 AND THE BUILDING CODE USING THE ORDINARY REINFORCED METHOD.

2. MATERIALS:
   - A. ALL CONCRETE MASONRY UNITS (CMU) SHALL BE TWO-CELL, LIGHTWEIGHT AGGREGATE UNITS WITH A SPECIFIED MINIMUM COMPRESSIVE STRENGTH OF 1900 PSI ON NET AREA AT 28 DAYS CONFORMING TO ASTM C90.
   - B. ALL MORTAR SHALL BE TYPE "S" CONFORMING TO ASTM C270.
   - C. GROUT SHALL CONFORM TO ASTM C476 WITH ⅜" AGGREGATE WITH TYPE I CEMENT, A MAXIMUM WATER/CEMEMT RATION OF 0.65, AND A SLUMP OF 5" TO 9". THE MINIMUM GROUT COMPRESSIVE STRENGTH (f'_c) SHALL BE 2500 PSI.
   - D. CMU LOCATED BELOW GRADE SHALL BE NORMAL-WEIGHT AGGREGATE UNITS WITH ALL CELLS GROUTED SOLID.

3. HORIZONTAL WALL REINFORCING:

3.A. PROVIDE CONTINUOUS HORIZONTAL REINFORCING AT THE TOP OF THE WALL AND AT A MAXIMUM OF 4'-0" ON CENTER IN KNOCK-OUT BOND BEAMS UNLESS NOTED OTHERWISE. REINFORCING STEEL SHALL LAP PER TABLE.

3.B. PROVIDE HORIZONTAL REINFORCING AT THE HEAD OF ALL OPENINGS IN A "U" SHAPED SOLID BOTTOM LINTEL BLOCK. CUT OFF THE BOTTOM SHELL OF THE LINTEL BLOCKS AT VERTICAL REINFORCING LOCATION FOR JAMBS. PROVIDE HORIZONTAL REINFORCING AT THE SILL OF ALL OPENINGS IN A KNOCK-OUT BOND BEAM. REINFORCING STEEL SHALL EXTEND BEYOND OPENING PER DETAILS.

3.C. MINIMUM HORIZONTAL REINFORCING IN ALL LINTELS AND BOND BEAMS SHALL BE AS FOLLOWS UNLESS NOTED OTHERWISE:

WALL THICKNESS	REINFORCING
8"	(2) #4

4. VERTICAL REINFORCING:

4.A. PROVIDE VERTICAL REINFORCING (NORMAL REINFORCING) IN FULLY GROUTED CELLS, CENTERED AND HELD IN PLACE BY REINFORCING STEEL GUIDES IN ALL WALLS AS FOLLOWS, UNLESS NOTED OTHERWISE:

THICKNESS	INTERIOR NON-LOAD BRG. WALLS	EXTERIOR & LOAD BRG. WALLS
8"	#5 AT 48" O.C.	#5 AT 48" O.C.

4.B. PROVIDE VERTICAL FULLY GROUTED REINFORCED CELLS AT EACH SIDE OF AN ISOLATION JOINT, AT INTERSECTIONS OF WALLS, EACH SIDE OF A WALL OPENING, AT EACH BEAM BEARING, AND AT THE END OF A WALL.

4.C. VERTICAL REINFORCING SHALL EXTEND CONTINUOUSLY FROM THE TOP OF THE SUPPORTING MEMBER TO THE TOP BOND BEAM. THERE SHALL BE A DOWEL, CAST INTEGRAL WITH THE SUPPORTING MEMBER, FOR EACH VERTICAL REINFORCING BAR EXCEPT AS NOTED. ALL VERTICAL REINFORCING STEEL SHALL BE HOOKED INTO TOP BOND BEAM. ALL HOOKS, STRAIGHT EMBEDMENTS AND LAPS SHALL BE PER TABLE.

5. LOCATION AND DETAILS OF CONTROL AND ISOLATION JOINTS IN MASONRY WALLS SHALL BE PER THE ARCHITECTURAL DRAWINGS. IF NOT SHOWN OR NOTED ON THE ARCHITECTURAL DRAWINGS, THE MAXIMUM SPACING OF CONTROL OR ISOLATION JOINTS SHALL BE AT A LENGTH TO HEIGHT RATIO OF 2:1 OR 30'-0" O.C., WHICHEVER IS LESS. REINFORCING IN ALL BOND BEAMS, INCLUDING THE TOP BOND BEAM, SHALL BE DISCONTINUOUS AT CONTROL AND ISOLATION JOINTS. CONTRACTOR SHALL SUBMIT A JOINT LAYOUT PLAN FOR APPROVAL PRIOR TO CONSTRUCTION.

6. CONTRACTOR SHALL BE RESPONSIBLE FOR PROVING WALL ELEVATIONS AS PART OF THE SUBMITTAL. WALL ELEVATIONS SHALL INCLUDE HORIZONTAL AND VERTICAL REINFORCING, EMBEDS, CONTROL JOINTS, OPENINGS, ETC. IT IS THE CONTRACTOR'S RESPONSIBILITY TO COORDINATE WITH THE ARCHITECTURAL, MECHANICAL AND ELECTRICAL DRAWINGS FOR ALL OPENING LOCATION.

7. EMBEDDED CONDUIT, PIPES OR SLEEVES SHALL BE NO CLOSER THAN 3 DIAMETER ON CENTER OR DISPLACE MORE THAN 2% OF THE NET AREA.

8. LOOSE LINTELS SUPPORTING MASONRY VENEERS, UNLESS NOTED OTHERWISE, SHALL BE:

OPENING WIDTH	LINTEL
< 4'-0"	L3½"X3½"X5/16"
4'-0" - 8'-0"	L 5"X3½"X⅜" LLV
> 8'-0"	REF. PLANS

ALL LINTELS SHALL BEAR A MINIMUM OF 8" ON EACH END.

REQUIRED SPECIAL INSPECTION AND TESTS OF CONCRETE CONSTRUCTION

VERIFICATION AND INSPECTION	FREQUENCY	REFERENCED STANDARD	IBC REFERENCE
1. Inspection reinforcement, including prestressing tendons, and verify placement.	Periodic	ACI 318 Ch. 20, 25.2, 25.3, 26.5.1-26.5.3	1908.4
2. Reinforcing bar welding:		AWS D1.4 ACI 318: 26.5.4	
a. Verify weldability of reinforcing bars other than ASTM A 706	Periodic		
b. Inspect single-pass fillet welds, maximum 5/16"	Periodic		
c. Inspect all other welds.	Continuous		
3. Inspection anchors cast in concrete.	Periodic	ACI 318: 17.8.2	
4. Inspection of anchors post installed in hardened concrete members.			
a. Adhesive anchors insatlled in horizontally or upwardly inclined orientations to resist sustained tension loads.	Continuous	ACI 318: 17.8.2.4	
b. Mechanical anchors and adhesize anchors not defined in 4.a.	Periodic	ACI 318: 17.8.2	
5. Verifying use of required mix design.	Periodic	ACI 318: Ch. 19, 26.4.3, 26.4.4	1904.1, 1904.2 1908.2, 1908.3
6. Prior to concrete placement, fabricate specimens for strength tests, perform slump and air content tests, and determine the tempaerature of the concrete.	Continuous	ASTM C172, ASTM C31, ACI 318: 26.4.5, 26.12	1908.10
7. Inspection of concrete and shotcrete placement for proper application techniques.	Continuous	ACI 318: 26.4.5	1908.6, 1908.7, 1908.8
8. Verify maintenance of specified curing temperature and techniques.	Periodic	ACI 318: 26.4.7-26.4.9	1908.9
9. Inspection of prestressed concrete for:			
a. Application of prestressing forces; and	Continuous	ACI 318: 26.9.2.1	
b. Grouting of bonded prestressing tendons.	Continuous	ACI 318: 26.9.2.3	
10. Inspect erection of precast concrete members.	Periodic	ACI 318: Ch. 26.8	
11. Verification of in-situ concrete strength, prior to stressing of tendons in posttensioned concrete and prior to removal of shores and forms from beams and structural slabs.	Periodic	ACI 318: 26.10.2	
12. Inspect formwork for shape, location and dimensions of the concrete member being formed.	Periodic	ACI 318: 26.10.1(b)	

REQUIRED VERIFICATION & INSPECTION OF SOILS

VERIFICATION AND INSPECTION	FREQUENCY
1. Verify materials below shallow foundations are adequate to achieve the design bearing capacity.	Periodic
2. Verify excavations are extended to proper depth and have reached proper material.	Periodic
3. Perform classification and testing of compacted fill materials.	Periodic
4. Verify use of proper materials, densities and lift thicknesses during placement and compaction of compacted fill.	Continuous
5. Prior to placement of compacted fill, observe subgrade and verify that site has been properly prepared.	Periodic

REQUIRED VERIFICATION & INSPECTION OF CAST-IN-PLACE DEEP FOUNDATION ELEMENTS

VERIFICATION AND INSPECTION	FREQUENCY
1. Observe drilling operations and maintain complete and accurate records for each element..	Continuous
2. Verify placement locations and plumbness, confirm element diameters, bell diameters (if applicable), lengths, embedment into bedrock (if applicable) and adequate end-bearing strata capacity. Record concrete or grout volumes.	Continuous
3. For concrete elements, perform additional inspections in accordance with Section 1704.4.	

Special Inspection Additional Requirements:

-Additional items that need special inspection, in the opinion of the building official, shall be inspected.

-Coordination of Special Inspections with construction of the inspected items shall be the responsibility of the contractor.

-If Special Inspection is waived by the Authority having Jurisdiction, the general contractor shall provide the designer of record with a copy of the written exemption for each item that has been waived.

-The building official may perform inspections in addition to and/or concurrently with the Special Inspection's outlined in the tables.

-The general contractor is responsible for implementing a quality control program. The quality controlprogram is in addition to the Special Inspection requirements and must meet or exceed those responsibilities required as part of the contract drawings and specifications.

REQUIRED VERIFICATION & INSPECTION OF STEEL CONSTRUCTION

VERIFICATION AND INSPECTION	FREQUENCY	REFERENCED STANDARD	IBC REFERENCE
1. Material verification of high-strength bolts, nuts and washers:			
a. Identification markings to conform to ASTM standards specified in the approved construction documents.	Periodic	ASTM 360, Section A3.3 and applicable ASTM material standards	
b. Manufacturer's certificate of compliance required.	Periodic		
2. Inspection of high-strength bolting:			
a. Snug-tight joints.	Periodic	AISC 360, Section M2.5	1704.3.3
b. Pretensioned and slip-critical joints using turn-of-nut with matchmarking, twist-off bolt or direct tension indicator methods of insallation.	Periodic		
c. Pretensioned and slip-critical joints using turn-of-nut without matchmarking or calibrated wrench methods of insallation.	Continuous		
3. Material verification of structural steel and cold-formed steel deck:			
a. For structural steel, identification markings to conform to AISC 360.	Periodic	AISC 360, Section M5.5	
b. For other steel, identification markings to conform to ASTM standards specified in the approved construction documents.	Periodic	Applicable ASTM material standard	
c. Manufacturer's certified test reports.	Periodic		
4. Material verification of weld filler materials:			
a. Identification markings to conform to AWS specification in the approved construction documents.	Periodic	AISC 360, Section A3.5 and applicable AWS A5 documents.	
b. Manufacturer's certificate of compliance required.	Periodic		
5. Inspection of welding:			
a. Structural steel and cold-formed deck:			
1) Complete and partial joint penetration groove welds.	Continuous	AWS D1.1	1704.3.1
2) Multipass fillet welds.	Continuous		
3) Single-pass fillet welds > 5/16"	Continuous		
4) Plug and slot welds.	Continuous		
5) Single-pass fillet welds <= 5/16"	Periodic		
6) Floor or roof deck welds.	Periodic	AWS D1.3	
b. Reinforcing steel:			
1) Verification of weldability of reinforcing steel other than ASTM A706.	Periodic	AWS D1.4 and ACI 318, Section 3.5.2	
2) Reinforcing steel resisting flexural and axial forces in intermediate and special moment frames, and boundary elements of special structural walls of concrete and shear reinforcement.	Continuous		
3) Shear reinforcement.	Continuous		
4) Other reinforcing steel.	Periodic		
6. Inspection of steel frame joint details for compliance:			
a. Details such as bracing and stiffening.	Periodic		1704.3.2
b. Member locations.	Periodic		
c. Application of joint details at each connection.	Periodic		

REQUIRED VERIFICATION & INSPECTION OF STEEL CONSTRUCTION OTHER THAN STRUCTURAL STEEL

VERIFICATION AND INSPECTION	FREQUENCY	REFERENCED STANDARD
1. Material verification of cold-formed steel deck:		
a. Identification markings to conform to ASTM standards specified in the approved construction documents.	Periodic	Applicable ASTM material standards
b. Manufacturer's certified test reports.	Periodic	

REQUIRED SPECIAL INSPECTION OF OPEN-WEB STEEL JOISTS AND JOIST GIRDERS

VERIFICATION AND INSPECTION	FREQUENCY	REFERENCED STANDARD
1. Installation of open-web steel joists and joist girders.		
a. End connections - welding or bolted.	Periodic	SJI specificaitons listed in Section 2207.1.
b. Bridging - horizontal or diagonal.		
1. Standard bridging	Periodic	SJI specificaitons listed in Section 2207.1.
2. Bridging that differs from the SJI specifications linted in Section 2207.1.	Periodic	

GEOFFREY K. BLISS 24966 LICENSED PROFESSIONAL ENGINEER
10/24/16

PEC PROFESSIONAL ENGINEERING CONSULTANTS, P.A.
CHEROKEE BUILDING
4150 S. 100TH E. AVE., SUITE 401
TULSA, OK 74146
918-664-5400
www.pec1.com

GH2 ARCHITECTS

S002 SPECIAL INSPECTION TABLES

PROJECT NO. 147180 CONTRACT # 147180

TULSA PARKS DEPARTMENT
LACY POOL RECONSTRUCTION

CITY OF TULSA, OKLAHOMA
ENGINEERING SERVICES DEPARTMENT

PLANS AND ESTIMATES PREPARED BY:
GH2 ARCHITECTS, LLC.

REVISION	BY	DATE

PLAN SCALE:
PROFILE SCALE:
HORIZONTAL:
VERTICAL

DRAWN	CTM	10/24/2016	APPROVED:
DESIGNED	CTM	10/24/2016	
SURVEY			
PROJ. MGR.			
LEAD ENGR.			
FIELD MGR.			
RECOMMENDED DESIGN MANAGER			CITY ENGINEER

FILE: DRAWING: S002 DATE: 11.11.16
ATLAS PAGE NO: 116 SHEET 30 OF 74 SHEETS

10/24/2016 12:09:16 PM

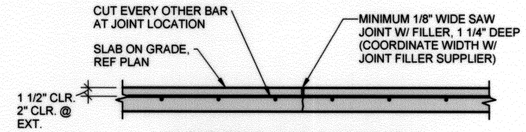

REINFORCING SAWN JOINT (SJ) DETAIL

SMOOTH BAR DOWELS		
SLAB DEPTH	DOWEL DIMENSIONS	DOWEL SPACING
4" TO 6"	3/4"ØX1'-2"	12" O.C.
7" TO 8"	1"ØX1'-4"	12" O.C.
9" TO 11"	1-1/4"ØX1'-6"	12" O.C.

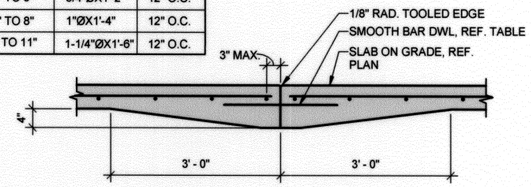

REINFORCING CONSTRUCTION JOINT (CJ) DETAIL

1 / 31 TYPICAL SLAB ON GRADE JOINT DETAIL
3/4" = 1'-0"

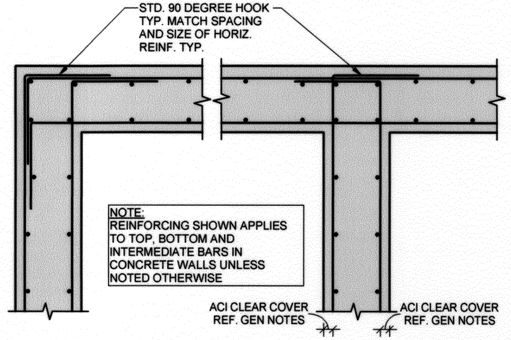

2 / 31 TYPICAL CORNER AND INTERSECT. REINF.
NO SCALE

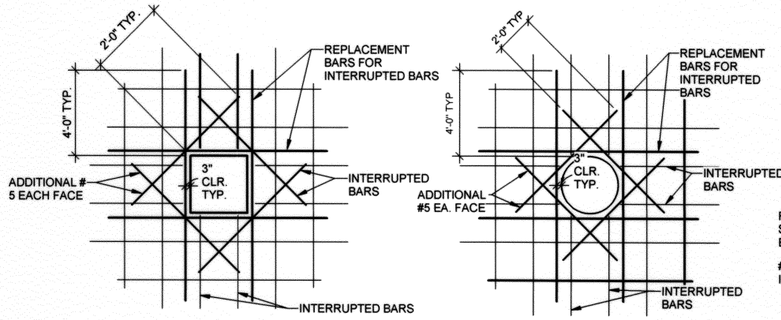

NOTES:

1. USE THIS DETAIL FOR ALL OPENINGS GREATER THAN 8" IN CONCRETE WALLS AND SLABS, PROVIDE (2) #5 ON DIAGONAL AT EACH CORNER AS SHOWN. EXTEND BARS 2'-0" PAST OPENING. REPLACE ALL VERTICAL AND HORIZONTAL BARS INTERUPTED BY THE OPENING WITH AN EQUAL NUMBER AND SIZE BARS EVENLY DIVIDED ON EACH SIDE OF THE OPENING UNLESS NOTED OTHERWISE.
2. REFER TO PLANS FOR ALL OPENING LOCATIONS.

3 / 31 TYPICAL SLAB/WALL OPENINGS1
NO SCALE

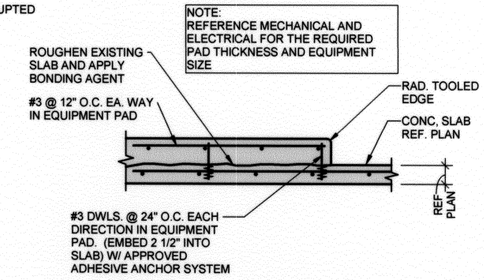

4 / 31 TYP INTERIOR EQUIPMENT PAD SECTION2
NO SCALE

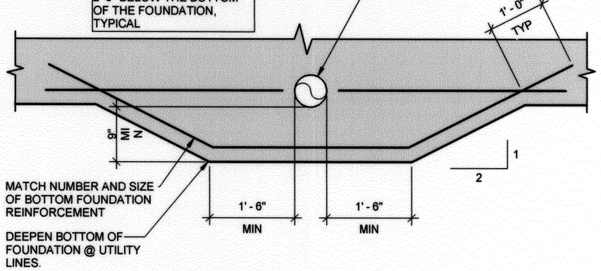

5 / 31 TYPICA.L THICKENED FOUNDATION DETAIL
NO SCALE

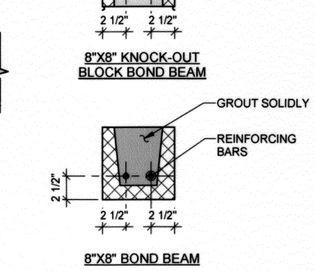

6 / 31 S301/10-MASONRY BOND BEAM REINFORCING
NO SCALE

NOTE: REFER TO WALL SCHEDULE AND PLAN FOR REINFORCEMENT SIZE AND SPACING OF CMU WALL

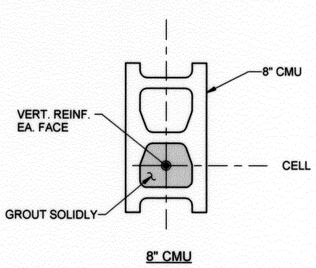

7 / 31 MASONRY VERTICAL CELL REINFORCING
NO SCALE

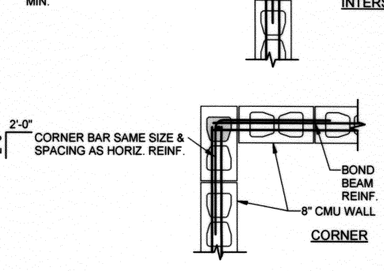

8 / 31 MASONRY CORNER AND INTERSECTION REINFORCING
NO SCALE

TABLE A - REINFORCEMENT LAPS, EMBEDMENTS, AND HOOK LENGTHS

fy = 60000 psi f'c = 4000 psi

BAR SIZE (d)	CLEAR SPACING (S) (in.)			EMBEDMENT & CLASS A LAP (in.)						CLASS B LAP (in.)						HOOK (in.)
				TOP BAR			OTHER BARS			TOP BAR			OTHER BARS			
	2d	3d	5d	2d<S<3d	S≥3d	S≥5d	2d<S<3d	S≥3d	S≥5d	2d<S<3d	S≥3d	S≥5d	2d<S<3d	S≥3d	S≥5d	
3	3/4	1 1/8	1 7/8	28	18	12	21	14	12	36	24	14	28	18	12	8
4	1	1 1/2	2 1/2	37	25	15	28	19	12	48	32	19	37	25	15	10
5	1 1/4	1 7/8	3 1/8	46	31	18	36	24	14	60	40	24	46	31	18	12
6	1 1/2	2 1/4	3 3/4	55	37	22	43	28	17	72	48	29	55	37	22	15
7	1 3/4	2 5/8	4 3/8	81	54	32	62	42	25	105	70	42	81	54	32	18
8	2	3	5	92	62	37	71	47	28	120	80	48	92	62	37	20
9	2 1/4	3 3/8	5 5/8	104	70	42	80	54	32	136	90	54	104	70	42	22
10	2.54	3.81	6.35	117	78	47	90	60	36	153	102	61	117	78	47	25
11	2.82	4.23	7.05	130	87	52	100	67	40	170	113	68	130	87	52	27

NOTES:

1. LENGTHS SHOWN CONFORM WITH NON-SEISMIC PROVISIONS OF ACI 318 FOR UNCOATED BARS.
2. BAR CLEAR SPACING IS THE CENTER TO CENTER BAR SPACING MINUS ONE BAR DIAMETER.
3. CLASS A LAP LENGTHS APPLY WHEN BAR LAPS ARE STAGGERED TO LAP HALF THE BARS AT THE SAME LOCATION. USE CLASS B LAP FOR ALL OTHER CASES.
4. TOP BARS ARE HORIZONTAL REINFORCEMENT PLACED SO THAT MORE THAN 12 INCHES OF CONCRETE IS CAST BELOW THE REINFORCEMENT.
5. MULTIPLY LAP AND EMBEDMENT LENGTHS GIVEN BY 2.0 FOR BARS WITH CLEAR SPACING OF TWO BAR DIAMETERS OR LESS, OR CONCRETE COVER OF ONE BAR DIAMETER OR LESS.

12 / 31 LAP TABLE
NO SCALE

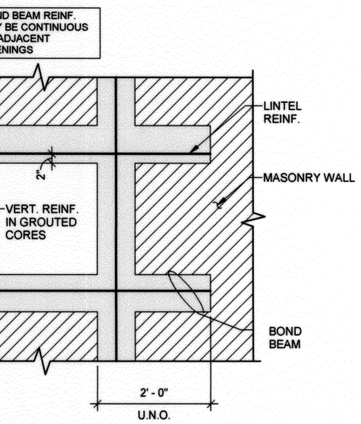

9 / 31 MASONRY OPENING REINFORCING
NO SCALE

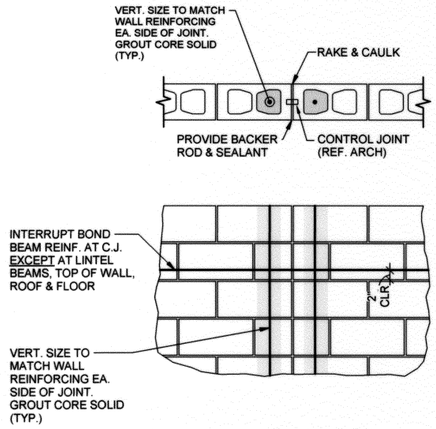

10 / 31 MASONRY CONTROL JOINT DETAIL
NO SCALE

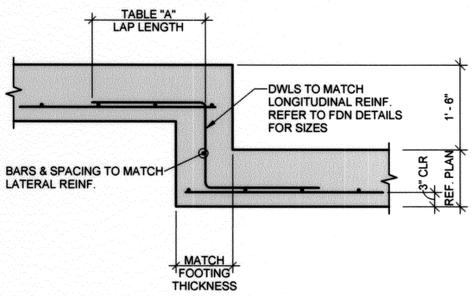

11 / 31 STEP FOOTING
3/4" = 1'-0"

GH2 ARCHITECTS

PEC PROFESSIONAL ENGINEERING CONSULTANTS, P.A.
CHEROKEE BUILDING
4150 S. 100TH E. AVE., SUITE 401
TULSA, OK 74146
918-664-5400
www.pec1.com

S003 TYPICAL DETAILS

PROJECT NO. 147180 CONTRACT # 147180

TULSA PARKS DEPARTMENT
LACY POOL RECONSTRUCTION

CITY OF TULSA, OKLAHOMA
ENGINEERING SERVICES DEPARTMENT

PLANS AND ESTIMATES PREPARED BY:
GH2 ARCHITECTS, LLC.

GEOFFREY K. BLISS 24966 LICENSED PROFESSIONAL ENGINEER
10/24/16

REVISION	BY	DATE

PLAN SCALE: PROFILE SCALE: HORIZONTAL: VERTICAL

DRAWN	CTM	10/24/2016	APPROVED:
DESIGNED	CTM	10/24/2016	
SURVEY			
PROJ. MGR.			
LEAD ENGR.			
FIELD MGR.			
RECOMMENDED			
DESIGN MANAGER			CITY ENGINEER

FILE: DRAWING: S003 DATE: 11.11.16

ATLAS PAGE NO: 116 SHEET 31 OF 74 SHEETS

10/24/2016 12:09:20 PM

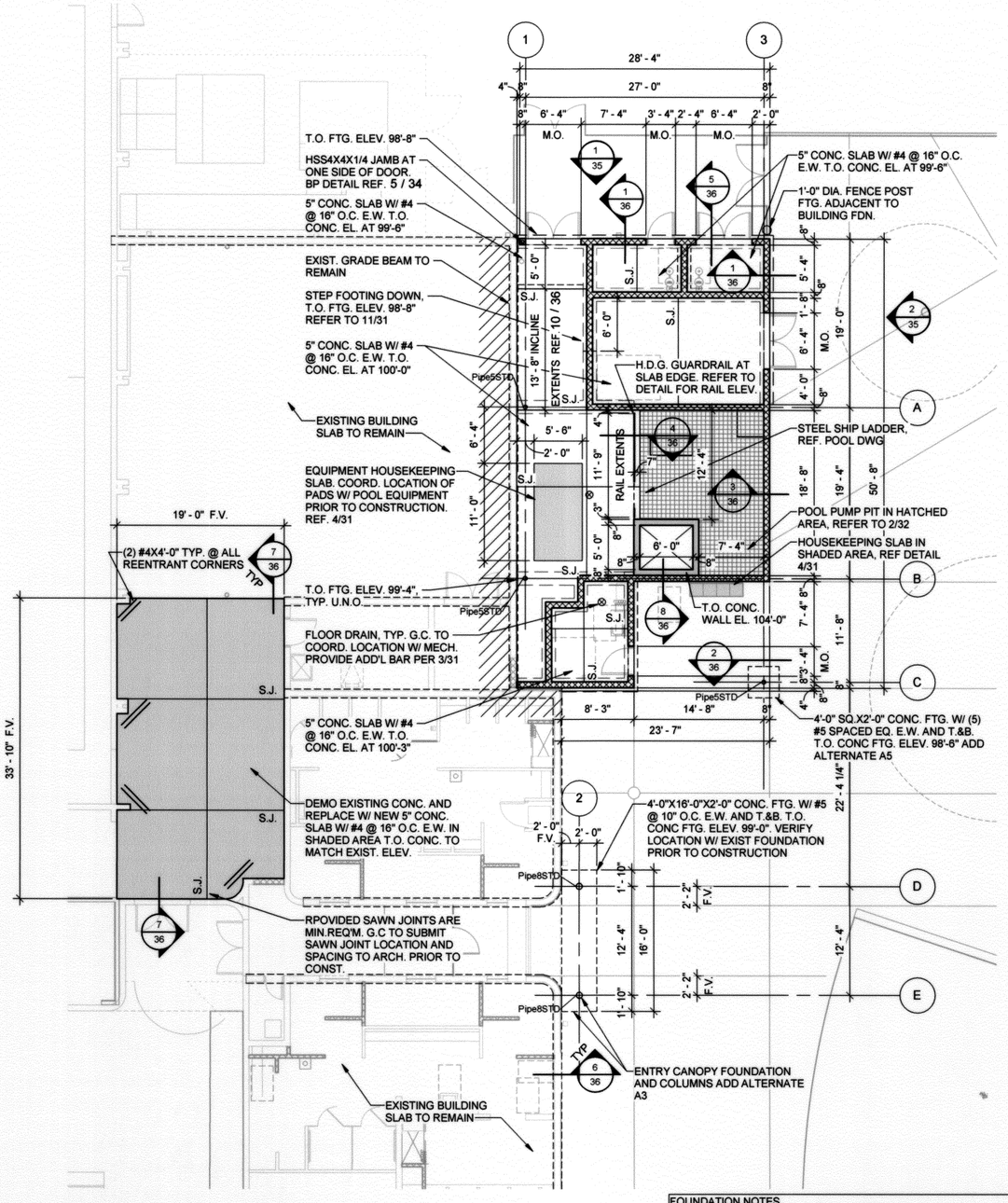

1/32 FOUNDATION PLAN
1/8" = 1'-0"

FOUNDATION NOTES

1. DIMENSIONS ARE FROM EDGE OF SLAB/FACE OF WALL OR CENTERLINE OF BEAM.
2. REF. S001 FOR GENERAL NOTES.
3. REF. S003 FOR TYP. FDN. DETAILS.
4. FIELD VERIFY ALL DIMENSIONS W/ EXISTING BUILDING PRIOR TO CONSTRUCTION. IF DISCREPENCIES ARE FOUND BETWEEN WHAT IS SHOWN ON THE DRAWINGS AND WHAT EXISTS IN THE FIELD, CONTACT THE ARCHITECT TO DETERMINE WHAT SHOULD BE DONE TO MATCH THE EXISTING CONDITIONS AS REQUIRED.
5. G.C. NOT TO OVEREXCAVATE EXISTING BUILDING FOUNDATION DURING CONSTRUCTION. FIELD VERIFY EXISTING FOOTING DEPTHS ARE BELOW ALL NEW FOUNDATIONS PRIOR CONSTRUCTION.
6. T.O. OF CONC. SLAB 663.55' = 100'-0", U.N.O.
7. PREPARE AND COMPACT SUBGRADE ADJACENT TO EXISTING BUILDING FOUNDATIONS PER DETAIL 6/S401. CONTRACTOR SHALL VERIFY EXISTING BUILDING FOOTING PRIOR TO CONSTRUCTION TO ENSURE EXISTING BUILDING FOUNDATIONS ARE NOT UNDERMINED DURNING CONSTRUCTION.

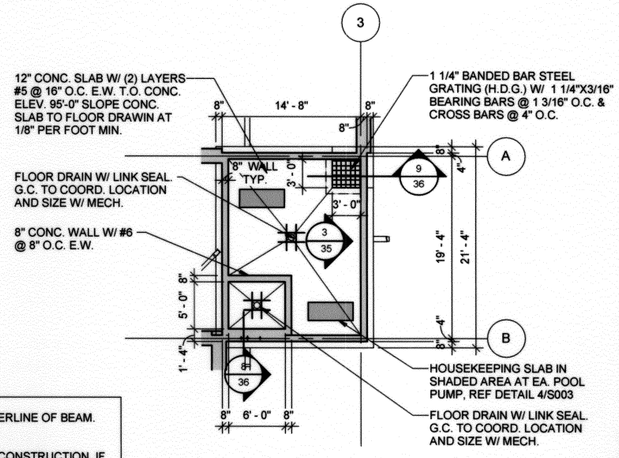

2/32 FOUNDATION PLAN
1/8" = 1'-0"

LEVEL B - QUALITY ASSURANCE

MINIMUM TESTS

Verification of Slump flow and Visual Stability Index (VSI) as delivered to the project site in accordance with Specification Article 1.5 B.1.b.3 for self-consolidating grout

Verification of f'_m and f'_{AAC} in accordance with Specification Article 1.4 B prior to construction, except where specifically exempted by Code

MINIMUM INSPECTION

Inspection Task	FREQUENCY[a] Continuous	FREQUENCY[a] Periodic	REFERENCE FOR CRITERIA TMS 402/ACI 530/ASCE 5	REFERENCE FOR CRITERIA TMS 602/ACI 530.1/ASCE 6
1. Verify compliance with the approved submittals		X		Art. 1.5
2. As masonry construction begins, verify that the following are in compliance:				
a. Proportions of site-prepared mortar		X		Art. 2.1, 2.6 A
b. Construction of mortar joints		X		Art. 3.3 B
c. Grade and size of prestressing tendons and anchorages		X		Art. 2.4 B, 2.4 H
d. Location of reinforcement, connectors, and prestressing tendons and anchorages		X		Art. 3.4, 3.6 A
e. Prestressing technique		X		Art. 3.6 B
f. Properties of thin-bed mortar for AAC masonry	X[b]	X[c]		Art. 2.1 C
3. Prior to grouting, verify that the following are in compliance:				
a. Grout space		X		Art. 3.2 D, 3.2 F
b. Grade, type, and size of reinforcement and anchor bolts, and prestressing tendons and anchorages		X	Sec. 1.16	Art. 2.4, 3.4
c. Placement of reinforcement, connectors, and prestressing tendons and anchorages		X	Sec. 1.16	Art. 3.2 E, 3.4, 3.6 A
d. Proportions of site-prepared grout and prestressing grout for bonded tendons		X		Art. 2.6 B, 2.4 G.1.b
e. Construction of mortar joints		X		Art. 3.3 B
4. Verify during construction:				
a. Size and location of structural elements		X		Art. 3.3 F
b. Type, size and location of anchors, including other details of anchorage of masonry to structural members, frames or other construction		X	Sec. 1.16.4.3, 1.17.1	
c. Welding of reinforcement	X		Sec. 2.1.7.7.2, 3.3.3.4 (c), 8.3.3.4(b)	
d. Preparation, construction and protection of masonry during cold weather (temperatures below 40° F (4.4°C)) or hot weather (temperatures above 90° F (32.2°C))		X		Art. 1.8 C, 1.8 D
e. Application and measurement of prestressing force	X			Art. 3.6 B
f. Placement of grout and prestressing grout for bonded tendons is in compliance	X			Art. 3.5, 3.6 C
g. Placement of AAC masonry units and construction of thin-bed mortar joints	X[b]	X[c]		Art. 3.3 B.8
5. Observe preparation of grout specimens, mortar specimens, and/or prisms		X		Art. 1.4 B.2.a.3, 1.4 B.2.b.3, 1.4 B.2.c.3, 1.4 B.3, 1.4 B.4

(a) Frequency refers to the frequency of inspection, which may be continuous during the task listed or periodically during the listed task, as defined in the table.
(b) Required for the first 5000 square feet (465 square meters) of AAC masonry.
(c) Required after the first 5000 square feet (465 square meters) of AAC masonry.

PEC PROFESSIONAL ENGINEERING CONSULTANTS, P.A.
CHEROKEE BUILDING
4150 S. 100TH E. AVE., SUITE 401
TULSA, OK 74146
918-664-5400
www.pec1.com

GH2 ARCHITECTS

S101 FOUNDATION PLAN

PROJECT NO. 147180 CONTRACT # 147180

TULSA PARKS DEPARTMENT
LACY POOL RECONSTRUCTION

CITY OF TULSA, OKLAHOMA
ENGINEERING SERVICES DEPARTMENT

LICENSED PROFESSIONAL ENGINEER GEOFFREY K. BLISS 24966 10/24/16

PLANS AND ESTIMATES PREPARED BY:
GH2 ARCHITECTS, LLC.

REVISION	BY	DATE

PLAN SCALE:	DRAWN	CTM	10/24/2016	APPROVED:
	DESIGNED	CTM	10/24/2016	
	SURVEY			
PROFILE SCALE:	PROJ. MGR.		10/16	
HORIZONTAL:	LEAD ENGR.			
	FIELD MGR.		10/16	
VERTICAL	RECOMMENDED		10/16	
	DESIGN MANAGER			CITY ENGINEER
FILE:	DRAWING: S101			DATE: 11.11.16
ATLAS PAGE NO: 116				SHEET 32 OF 74 SHEETS

10/24/2016 12:09:21 PM

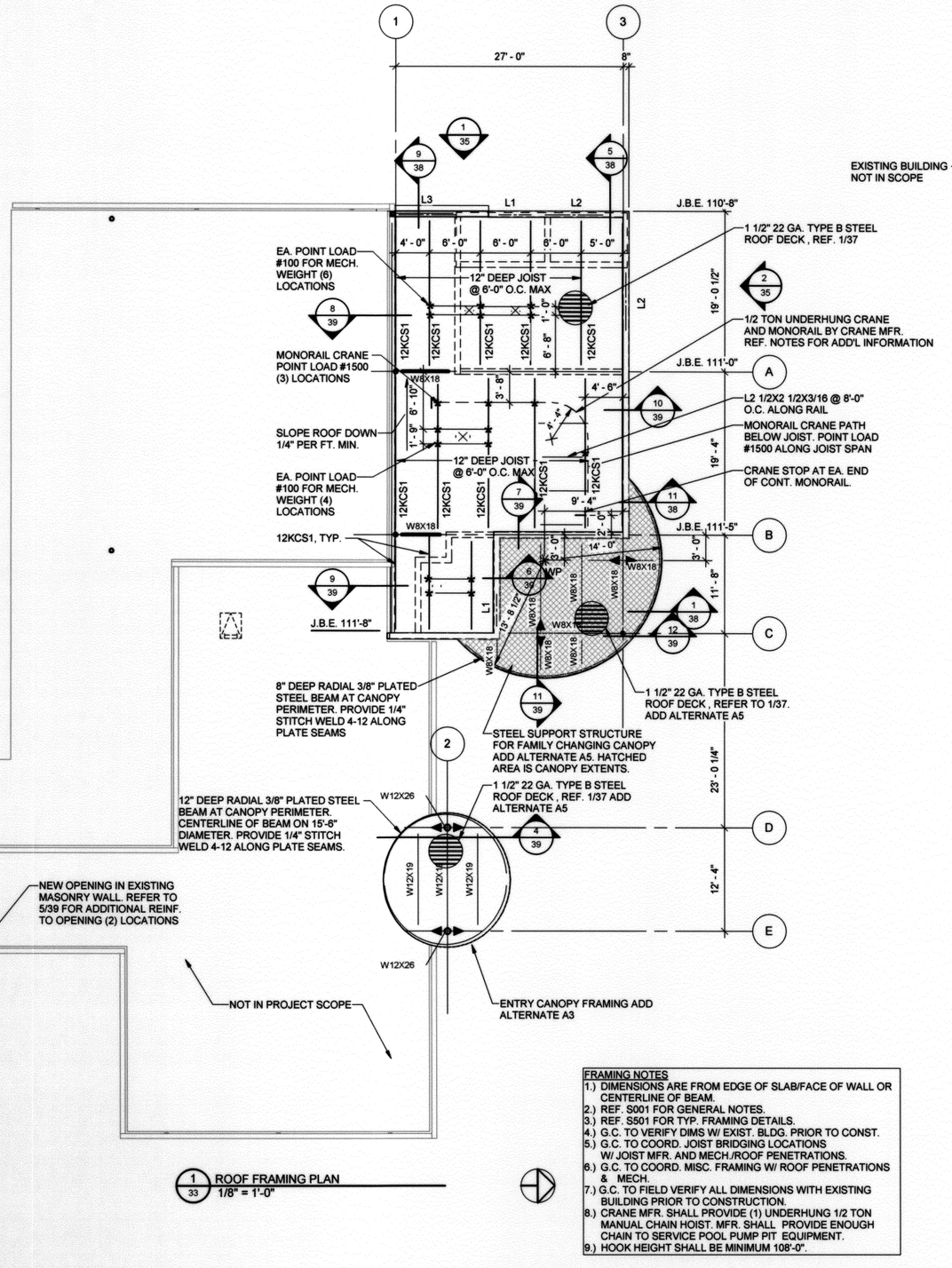

1 / 33 ROOF FRAMING PLAN
1/8" = 1'-0"

FRAMING NOTES
1.) DIMENSIONS ARE FROM EDGE OF SLAB/FACE OF WALL OR CENTERLINE OF BEAM.
2.) REF. S001 FOR GENERAL NOTES.
3.) REF. S501 FOR TYP. FRAMING DETAILS.
4.) G.C. TO VERIFY DIMS W/ EXIST. BLDG. PRIOR TO CONST.
5.) G.C. TO COORD. JOIST BRIDGING LOCATIONS W/ JOIST MFR. AND MECH./ROOF PENETRATIONS.
6.) G.C. TO COORD. MISC. FRAMING W/ ROOF PENETRATIONS & MECH.
7.) G.C. TO FIELD VERIFY ALL DIMENSIONS WITH EXISTING BUILDING PRIOR TO CONSTRUCTION.
8.) CRANE MFR. SHALL PROVIDE (1) UNDERHUNG 1/2 TON MANUAL CHAIN HOIST. MFR. SHALL PROVIDE ENOUGH CHAIN TO SERVICE POOL PUMP PIT EQUIPMENT.
9.) HOOK HEIGHT SHALL BE MINIMUM 108'-0".

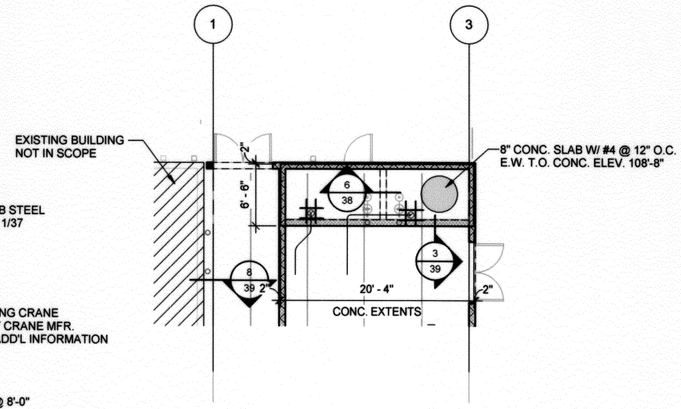

2 / 33 CHEMICAL STORAGE CEILING
1/8" = 1'-0"

GEOFFREY K. BLISS 24966
10/24/16

GH2 ARCHITECTS

S102 ROOF FRAMING PLAN

PROJECT NO. 147180 CONTRACT # 147180

TULSA PARKS DEPARTMENT
LACY POOL RECONSTRUCTION

CITY OF TULSA, OKLAHOMA
ENGINEERING SERVICES DEPARTMENT

PLANS AND ESTIMATES PREPARED BY:
GH2 ARCHITECTS, LLC.

REVISION	BY	DATE

PLAN SCALE: HORIZONTAL: PROFILE SCALE: VERTICAL

DRAWN	CTM	10/24/2016	APPROVED:
DESIGNED	CTM	10/24/2016	
SURVEY			
PROJ. MGR.			
LEAD ENGR.			
FIELD MGR.			
RECOMMENDED: DESIGN MANAGER			CITY ENGINEER

FILE: DRAWING: S102 DATE: 11.11.16

ATLAS PAGE NO: 116 SHEET 33 OF 74 SHEETS

PEC PROFESSIONAL ENGINEERING CONSULTANTS, P.A.
CHEROKEE BUILDING
4150 S. 100TH E. AVE., SUITE 401
TULSA, OK 74146
918-664-5400
www.pec1.com

10/24/2016 12:09:21 PM

COLUMN SCHEDULE

MARK (C#)	C1	C2	C3
EDGE ROOF EL. 116'-0" / FAMILY CHANGE CANOPY EL. 111'-5" / INTERIOR COL EL. 111'-0"	5"ø STD. COL.	5"ø STD. COL.	8"ø STD. COL.
FINISH FLOOR EL. 100' - 0"			
BASE PLATE	3/S301	3/S301	4/S301
PLATE THICKNESS	3/4"	3/4"	1 1/2"
ANCHOR BOLTS	(4) 3/4" DIA.	(4) 3/4" DIA.	(12) 3/4" DIA.
DETAIL	2/S301	2/S301	2/S301
REMARKS		ADD ALT #5	ADD ALT #3 NOTE #3

NOTE:
1) ALL EXTERIOR STEEL COLUMNS SHALL BE H.D.G.
2) COLUMN BASE ELEVATIONS ARE SHOWN IN SCHEDULE U.N.O.
3) BREAK COLUMN AT BEAM CONNECTION.

1/34 COLUMN SCHEDULE
NO SCALE

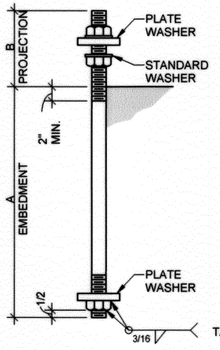

DIAMETER	A	B	PLATE SIZE
3/4"	1'-6"	6"	1/4"X2"Ø
1"	2'-0"	6"	3/8"X2 1/2"Ø
1 1/4"	2'-8"	8"	1/2"X3"Ø
1 1/2"	3'-0"	8"	1/2"X3"Ø

1. ALL ANCHOR BOLTS ARE TO BE SUPPLIED WITH 3 NUTS.
2. MINIMUM EMBEDMENT LENGTH OF ANCHOR MUST BE PLACED INTO A SINGLE POUR OF CONCRETE

2/34 ANCHOR ROD DETAIL
3/4" = 1'-0"

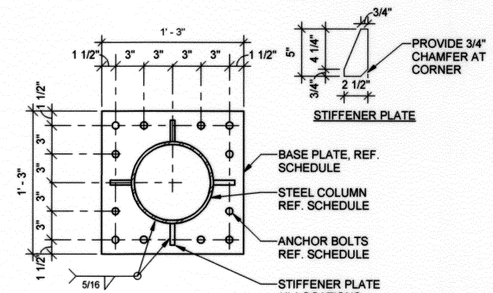

4/34 BASE PLATE DETAIL
1 1/2" = 1'-0"

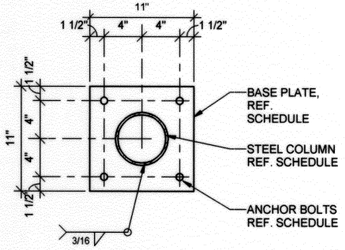

3/34 BASE PLATE DETAIL
1 1/2" = 1'-0"

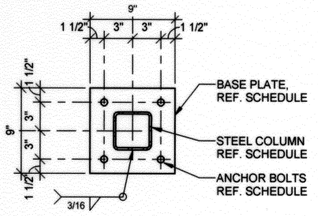

5/34 BASE PLATE DETAIL - HSS
1 1/2" = 1'-0"

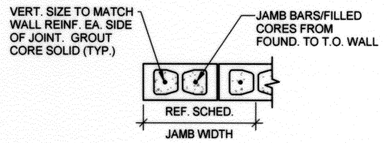

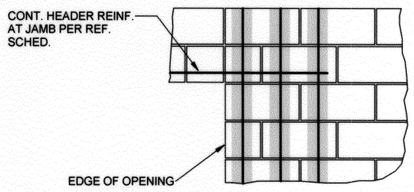

6/34 MASONRY JAMB DETAIL
NO SCALE

HEADER AND JAMB SCHEDULE

MARK (L#)	HEADER SIZE	JAMB SIZE	SILL SIZE	REMARKS
L1	8" W/ (2) #4 BOT.	8" W/ (1) #5 EA. CELL	N/A	REF. 6/S301
L2	16" W/ (2) #4 TOP & BOT.	16" W/ (1) #5 EA. CELL	N/A	REF. 6/S301
L3	W8X24	HSS4X4X1/4 & 16" W/ (1) #5 EA. CELL	N/A	REF. 8/S301 REF. 6/S301

REFERENCE GENERAL NOTES FOR HEADER AND JAMB REQUIREMENTS FOR OPENINGS NOT SHOWN ON PLAN.

9/34 CMU HEADER SCHEDULE
NO SCALE

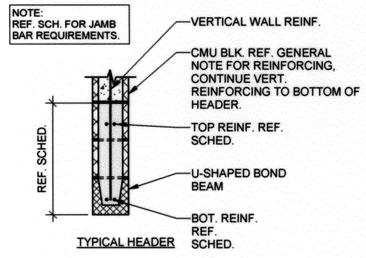

7/34 MASONRY LINTEL DETAIL
NO SCALE

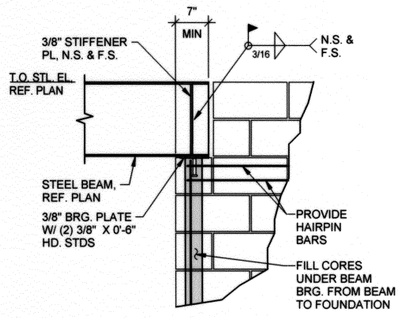

8/34 TYP STEEL BEAM BEARING DETAIL
3/4" = 1'-0"

PEC
PROFESSIONAL ENGINEERING CONSULTANTS, P.A.
CHEROKEE BUILDING
4150 S. 100TH E. AVE., SUITE 401
TULSA, OK 74146
918-664-5400
www.pec1.com

GEOFFREY K. BLISS 24966 — 10/24/16

GH2 ARCHITECTS

S301 SCHEDULES

PROJECT NO. 147180 CONTRACT # 147180

TULSA PARKS DEPARTMENT
LACY POOL RECONSTRUCTION

CITY OF TULSA, OKLAHOMA
ENGINEERING SERVICES DEPARTMENT

PLANS AND ESTIMATES PREPARED BY:
GH2 ARCHITECTS, LLC.

REVISION	BY	DATE

PLAN SCALE:	DRAWN	CTM	10/24/2016
	DESIGNED	CTM	10/24/2016
	SURVEY		
PROFILE SCALE:	PROJ. MGR.		
HORIZONTAL:	LEAD ENGR.		
	FIELD MGR.		
VERTICAL	RECOMMENDED		
	DESIGN MANAGER		

APPROVED:
CITY ENGINEER

FILE: DRAWING: S301
DATE: 11.11.16
ATLAS PAGE NO: 116
SHEET 34 OF 74 SHEETS

10/24/2016 12:09:22 PM

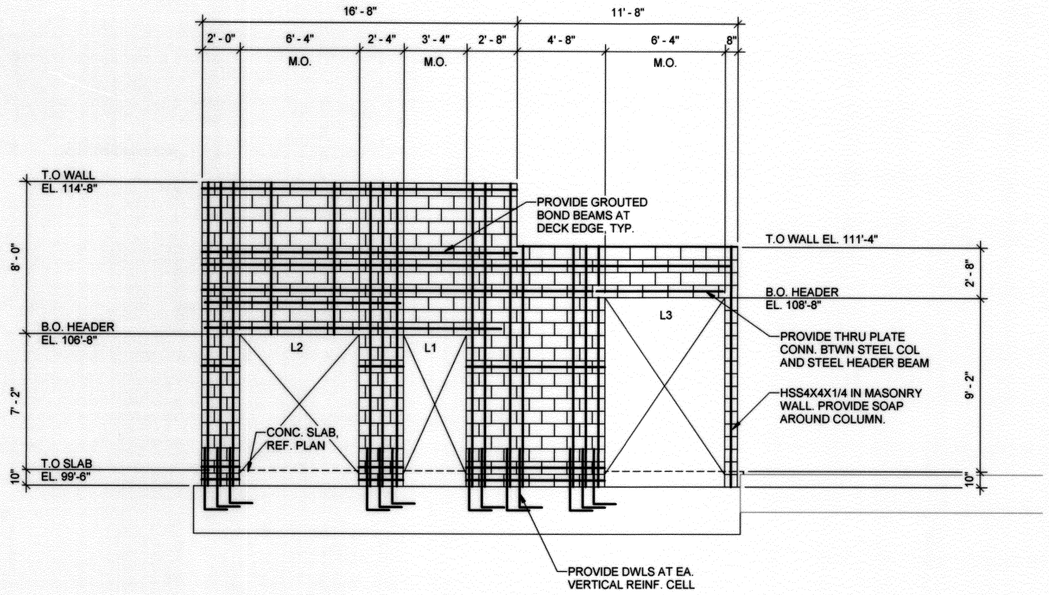

1 / 35 WEST ELEVATION
1/4" = 1'-0"

ELEVATOION NOTES:
1) DIMENSIONS ARE FROM FACE OF WALL/CENTERLINE OF COLUMN/EDGE OF CONCRETE
2) G.C. TO FIELD VERIFY BLOCK COURSE MATCHES EXISTING BUILDING PRIOR TO CONSTRUCTION.
3) FOUNDATION REINFORCEMENT NOT SHOWN FOR CLARITY.

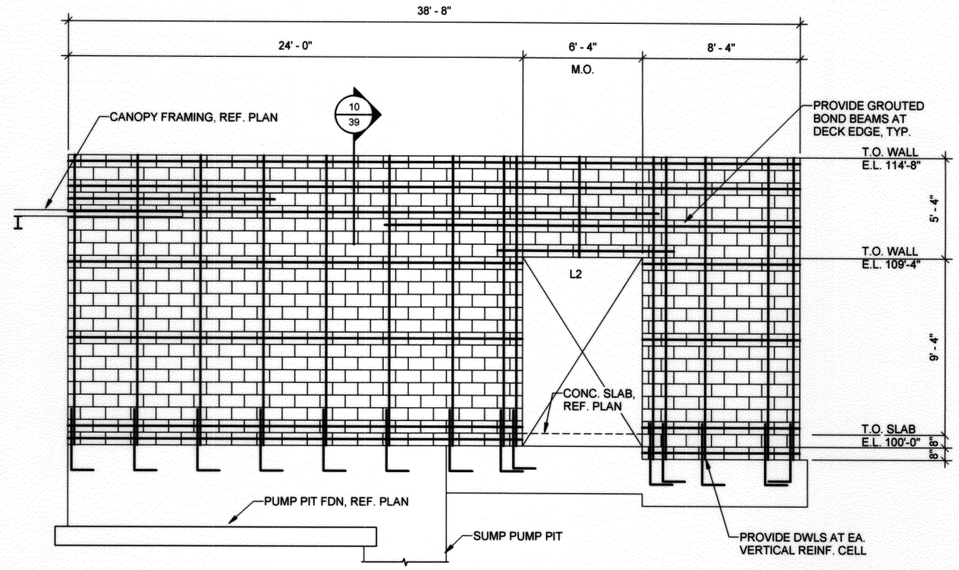

2 / 35 NORTH ELEVATION
1/4" = 1'-0"

OPENING LEGEND	
MARK	SIZE
P1	10 1/2" DIA.
P2	4 1/2" DIA.
P3	2 1/2" DIA.
P4	3 1/2" DIA.
P5	6 1/2" DIA.
P6	8 1/2" DIA.

NOTE:
1) ALL OPENING SHALL BE REINFORCED PER TYP. WALL OPENING DETAIL ON S003
2) G.C. SHALL VERIFY ALL OPENING SIZES AND LOCATIONS W/ POOL DRAWINGS PRIOR TO CONSTRUCTION

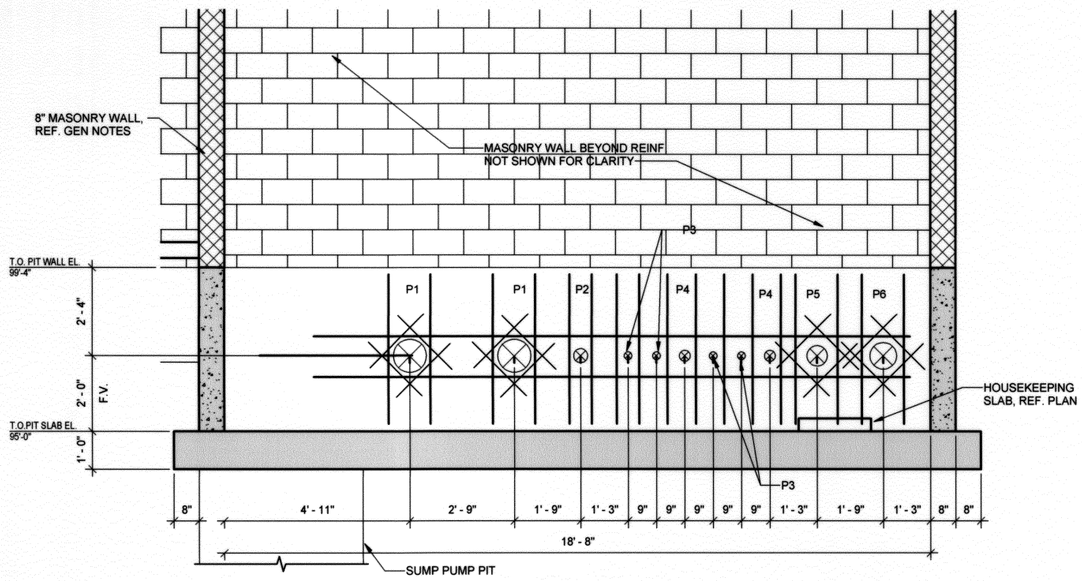

3 / 35 CONC. WALL ELEVATION
1/2" = 1'-0"

10/24/2016 12:09:24 PM

PEC
PROFESSIONAL ENGINEERING CONSULTANTS, P.A.
CHEROKEE BUILDING
4150 S. 100TH E. AVE., SUITE 401
TULSA, OK 74146
918-664-5400
www.pec1.com

GH2 ARCHITECTS

S302 ELEVATIONS

PROJECT NO. 147180 CONTRACT # 147180

TULSA PARKS DEPARTMENT
LACY POOL RECONSTRUCTION

CITY OF TULSA, OKLAHOMA
ENGINEERING SERVICES DEPARTMENT

PLANS AND ESTIMATES PREPARED BY:
GH2 ARCHITECTS, LLC.

GEOFFREY K. BLISS
LICENSED PROFESSIONAL ENGINEER
24966
10/24/16

REVISION	BY	DATE

PLAN SCALE:	DRAWN	CTM	10/24/2016
	DESIGNED	CTM	10/24/2016
	SURVEY		
PROFILE SCALE:	PROJ. MGR.		
HORIZONTAL:	LEAD ENGR.		
	FIELD MGR.	RBH	10/16
VERTICAL	RECOMMENDED		
	DESIGN MANAGER	HMS	10/16

APPROVED:
CITY ENGINEER

FILE: DRAWING: S302
DATE: 11.11.16

ATLAS PAGE NO: 116
SHEET 35 OF 74 SHEETS

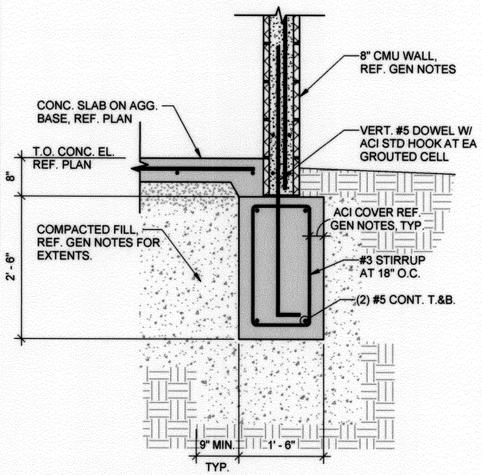

1 36 TYP WALL FDN SECTION
3/4" = 1'-0"

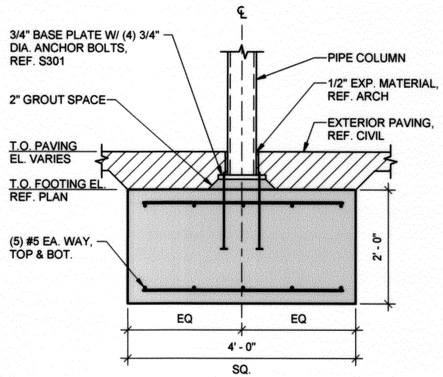

2 36 TYP SPREAD FOOTING AT EXTERIOR
3/4" = 1'-0"

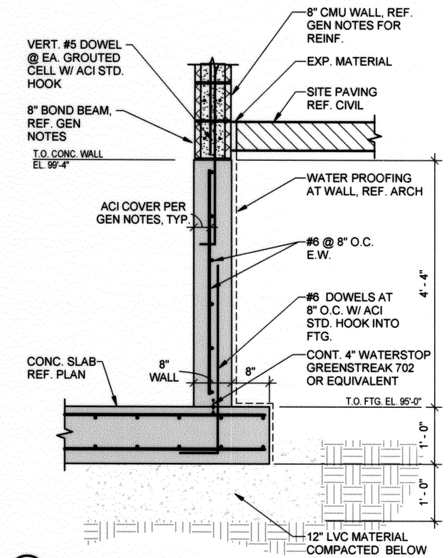

3 36 SUMP PIT WALL
3/4" = 1'-0"

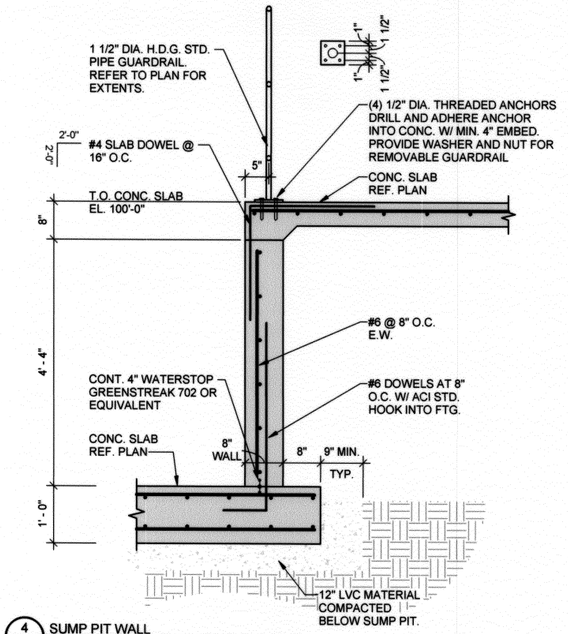

4 36 SUMP PIT WALL
3/4" = 1'-0"

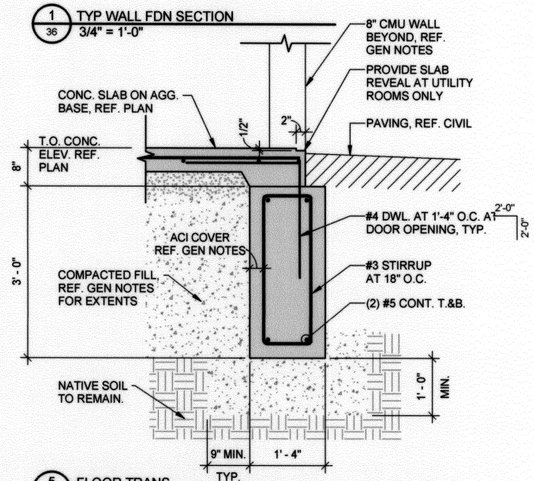

5 36 FLOOR TRANS.
3/4" = 1'-0"

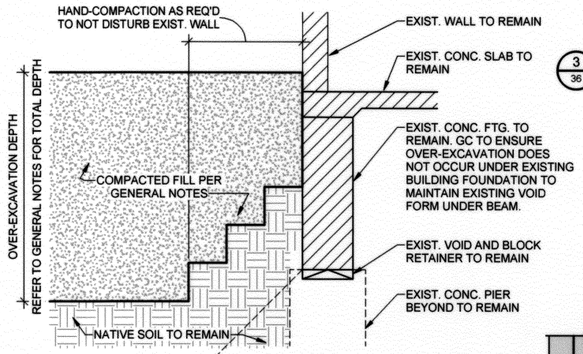

6 36 COMPACTION AT EXIST. FDN.
1/2" = 1'-0"

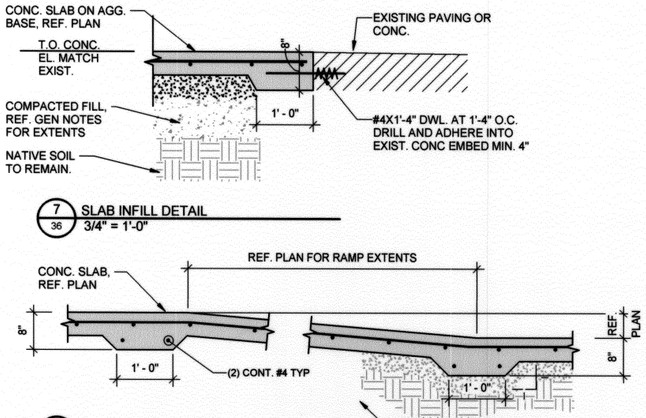

7 36 SLAB INFILL DETAIL
3/4" = 1'-0"

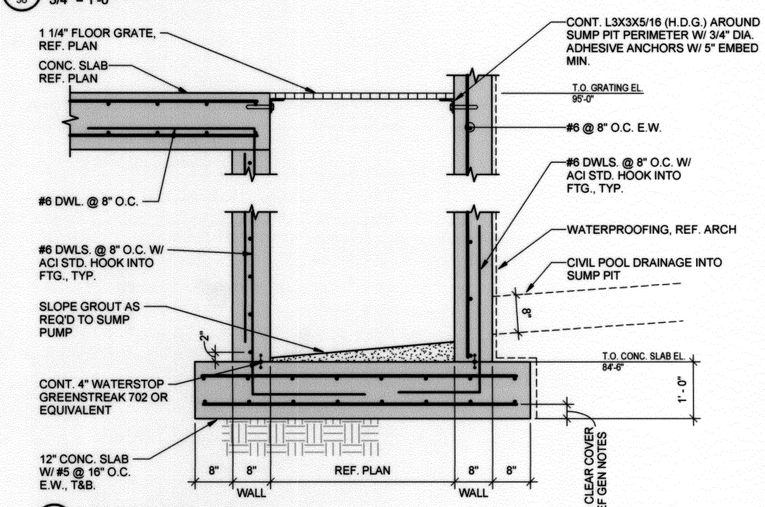

9 36 POOL TANK BASE
3/4" = 1'-0"

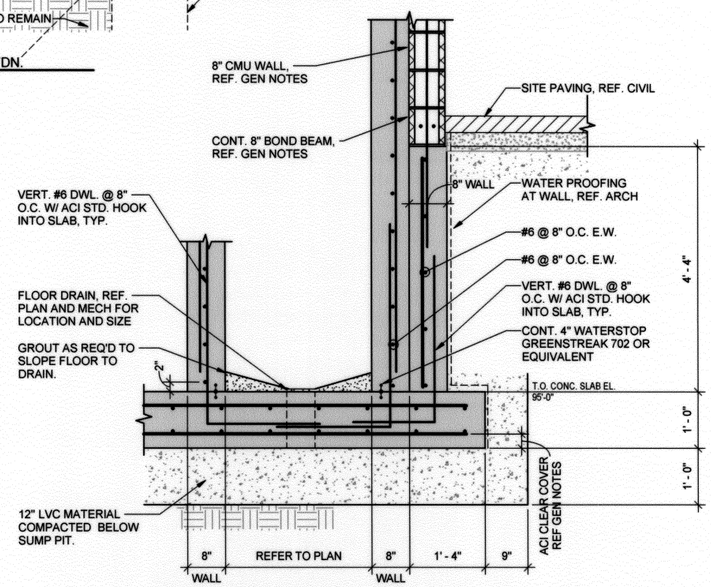

8 36 POOL TANK BASE
3/4" = 1'-0"

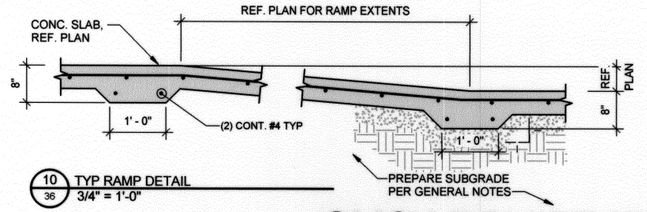

10 36 TYP RAMP DETAIL
3/4" = 1'-0"

GH2 ARCHITECTS

S401 FOUNDATION DETAILS

PROJECT NO. 147180 CONTRACT # 147180

TULSA PARKS DEPARTMENT
LACY POOL RECONSTRUCTION

CITY OF TULSA, OKLAHOMA
ENGINEERING SERVICES DEPARTMENT

PLANS AND ESTIMATES PREPARED BY:
GH2 ARCHITECTS, LLC.

GEOFFREY K. BUSS 24966 — 10/24/16

REVISION	BY	DATE

PLAN SCALE:	DRAWN	CTM	10/24/2016	APPROVED:
	DESIGNED	CTM	10/24/2016	
	SURVEY			
PROFILE SCALE:	PROJ. MGR.			
HORIZONTAL:	LEAD ENGR.			
	FIELD MGR.		10/16	
VERTICAL	RECOMMENDED			CITY ENGINEER
	DESIGN MANAGER			

FILE: DRAWING: S401 — DATE: 11.11.16

ATLAS PAGE NO: 116 — SHEET 36 OF 74 SHEETS

PEC PROFESSIONAL ENGINEERING CONSULTANTS, P.A.
CHEROKEE BUILDING
4150 S. 100TH E. AVE., SUITE 401
TULSA, OK 74146
918-664-5400
www.pec1.com

10/24/2016 12:09:25 PM

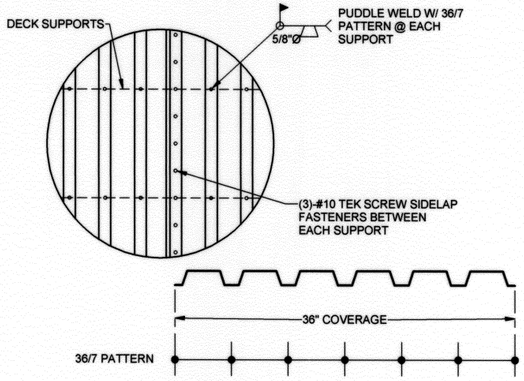

1 37 1 1/2" ROOF DECK ATTACHMENT
NO SCALE

NOTE:
ANGLES ARE REQUIRED AT ALL CURBS OF RTU AND AT THE EDGE OF DUCT OPENINGS IF THE ROOF DECK PROJECTS MORE THAN 4" BEYOND SUPPORTS IN THE SPANNING DIRECTION, FASTEN DECK TO ALL OPENING ANGLES PER GENERAL NOTES AND DETAILS

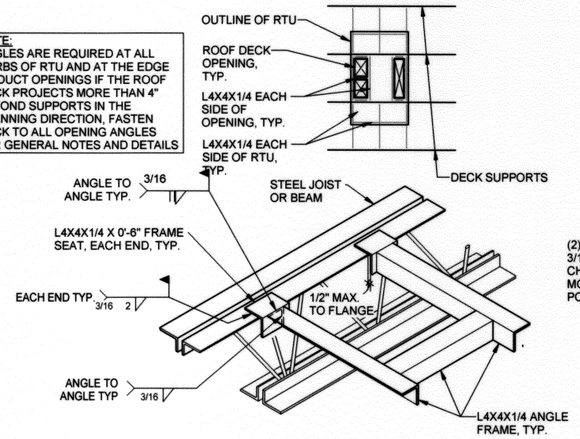

2 37 TYPICAL METAL DECK ROOF OPENING DETAIL
NO SCALE

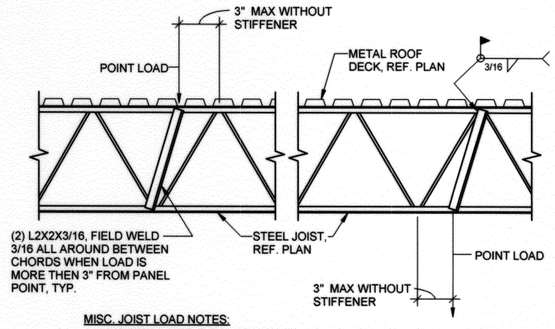

MISC. JOIST LOAD NOTES:
1. A MAXIMUM SINGLE CONCENTRATED LOAD OF 50 LBS. MAY BE APPLIED BETWEEN PANEL POINTS WITHOUT ANY JOIST REINFORCING
2. FOR CONCENTRATED LOADS IN EXCESS OF 50 LBS. AND UP TO 200 LBS, REINFORCE THE JOIST WITH THE MEMBERS NOTED ABOVE
3. FOR LOADS IN EXCESS OF 200 LBS. AND NOT INDICATED ON FRAMING PLANS, THE JOIST MANUFACTURER SHALL BE NOTIFIED BY THE CONTRACTOR OF THE MAGNITUDE AND LOCATION SO THE JOIST CAN BE DESIGNED FOR THE ADDITIONAL LOAD.

3 37 MISCELLANIOUS JOIST LOADING DETAIL
NO SCALE

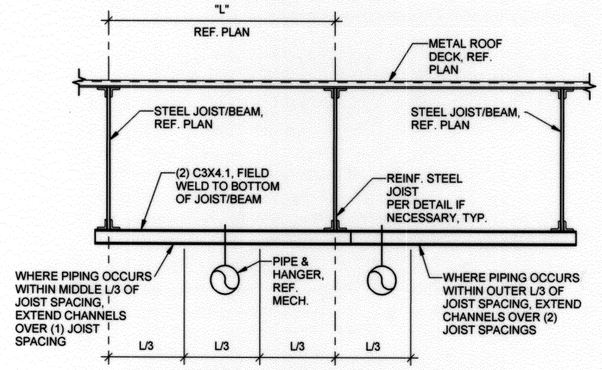

NOTE:
THIS DETAIL APPLIES FOR ONE PIPE 6" TO 10" IN DIAMETER. WHEN HANGING MULTIPLE PIPES VERIFY SUPPORT WITH ARCHITECT & STRUCTURAL ENGINEER PRIOR TO INSTALLATION. REFERENCE MECHANICAL FOR LOCATIONS, TYP.

4 37 PIPE SUPPORT DETAIL
NO SCALE

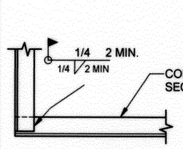

TYPICAL CORNER SPLICE

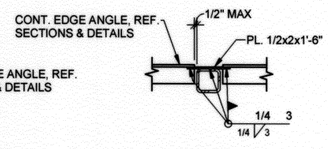

TYPICAL SPLICE AT COLUMN

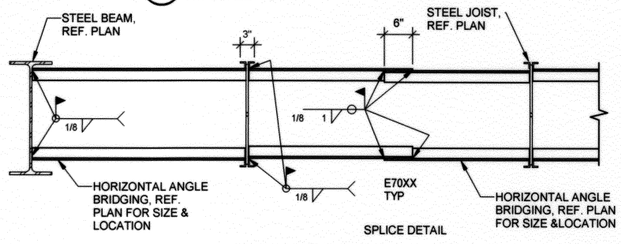

SPLICE DETAIL

HORIZONTAL BRIDGING

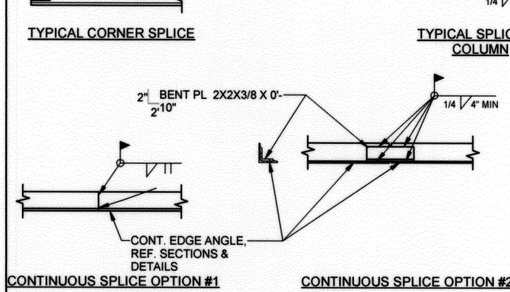

CONTINUOUS SPLICE OPTION #1

CONTINUOUS SPLICE OPTION #2

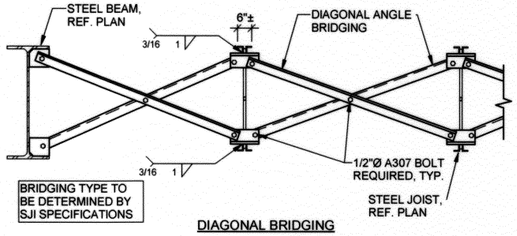

BRIDGING TYPE TO BE DETERMINED BY SJI SPECIFICATIONS

DIAGONAL BRIDGING

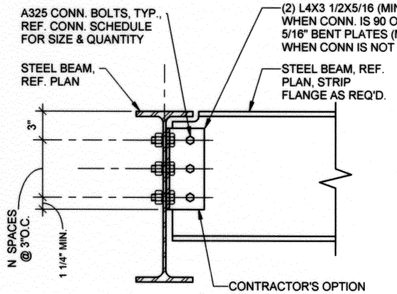

7 37 DOUBLE ANGLE CONNECTION
NO SCALE

BEAM CONNECTION SCHEDULE			
BEAM DEPTH	NUMBER OF BOLT LINES	BOLT DIAMETER U.N.O.	CAPACITY ASD / LRFD
W8	2	3/4" DIA.	21k / 31k
W10			
W12	3	3/4" DIA.	31k / 47k
W14			
W16			
W18	4	3/4" DIA.	42k / 63k
W21	5	3/4" DIA.	53k / 79k
W24	6	3/4" DIA.	63k / 95k
W27	7	3/4" DIA.	74k / 111k
W30	8	3/4" DIA.	
W33	-	3/4" DIA.	

NOTE:
AT CONTRACTORS OPTION, BOLTED CONNECTIONS TO BEAM WEBS MAY BE USED FOR CONSTRUCTABILITY.

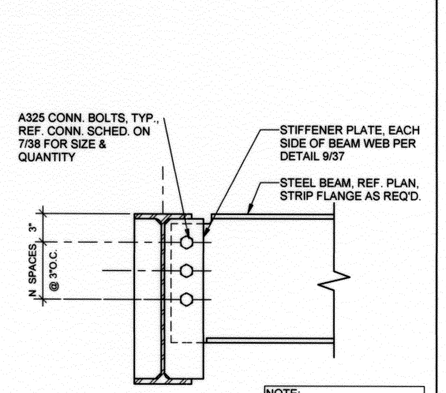

NOTE:
STEEL BEAMS MAY HAVE SHEAR CONNECTORS, REF. PLAN FOR LOCATIONS

8 37 WEB PLATE CONNECTION
NO SCALE

5 37 TYPICAL EDGE ANGLE SPLICE
NO SCALE

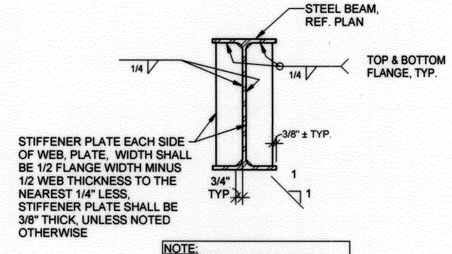

NOTE:
STIFFENER MAY BE REQUIRED TO EXTEND PAST THE FLANGE EDGE FOR CONNECTIONS PER DETAIL 8/37

9 37 WEB STIFFENER DETAIL
NO SCALE

6 37 BRIDGING DETAILS
NO SCALE

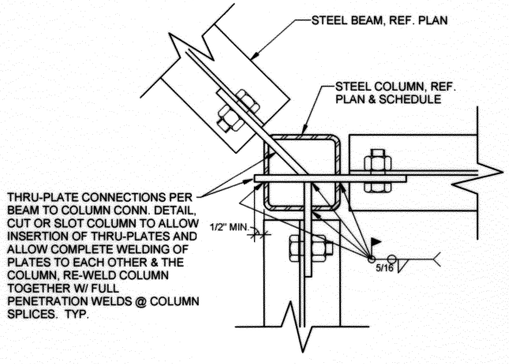

10 37 COLUMN ASSEMBLY
3" = 1'-0"

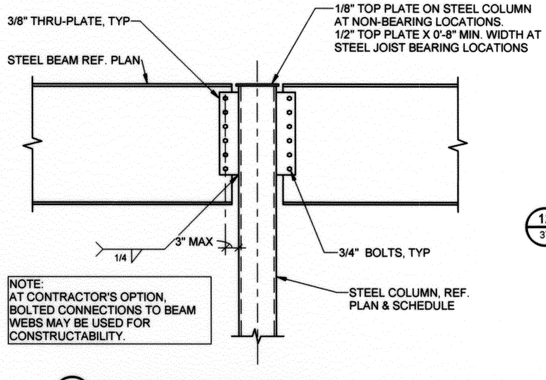

NOTE:
AT CONTRACTOR'S OPTION, BOLTED CONNECTIONS TO BEAM WEBS MAY BE USED FOR CONSTRUCTABILITY.

11 37 BEAM TO HSS COLUMN CONNECTION
NO SCALE

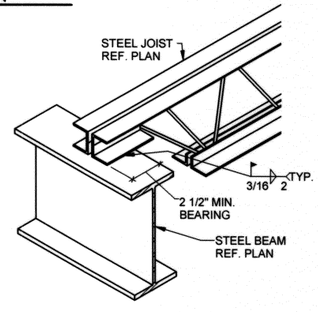

12 37 TYP. JOIST BEARING AT EDGE BEAM
NO SCALE

GH2 ARCHITECTS

REVISION	BY	DATE

PEC
PROFESSIONAL ENGINEERING CONSULTANTS, P.A.
CHEROKEE BUILDING
4150 S. 100TH E. AVE., SUITE 401
TULSA, OK 74146
918-664-5400
www.pec1.com

GEOFFREY K. BLISS 24966 LICENSED PROFESSIONAL ENGINEER
10/24/16

S501 TYPICAL FRAMING DETAILS

PROJECT NO. 147180 CONTRACT # 147180

TULSA PARKS DEPARTMENT
LACY POOL RECONSTRUCTION

CITY OF TULSA, OKLAHOMA
ENGINEERING SERVICES DEPARTMENT

PLANS AND ESTIMATES PREPARED BY:
GH2 ARCHITECTS, LLC.

PLAN SCALE:	DRAWN	CTM	10/24/2016	APPROVED:
	DESIGNED	CTM	10/24/2016	
	SURVEY			
PROFILE SCALE:	PROJ. MGR.	GKB	10/16	
HORIZONTAL:	LEAD ENGR.			
	FIELD MGR.	BEM	10/16	
VERTICAL	RECOMMENDED	HMS	10/16	
	DESIGN MANAGER			CITY ENGINEER

FILE: DRAWING: S501
DATE: 11.11.16
ATLAS PAGE NO: 116
SHEET 37 OF 74 SHEETS

10/24/2016 12:09:28 PM

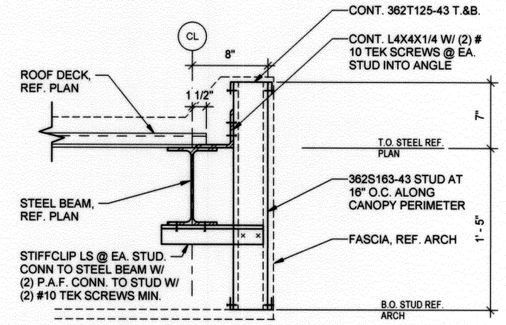

1 / 38 FASCIA DETAIL
1 1/2" = 1'-0" (ADD ALT A5)

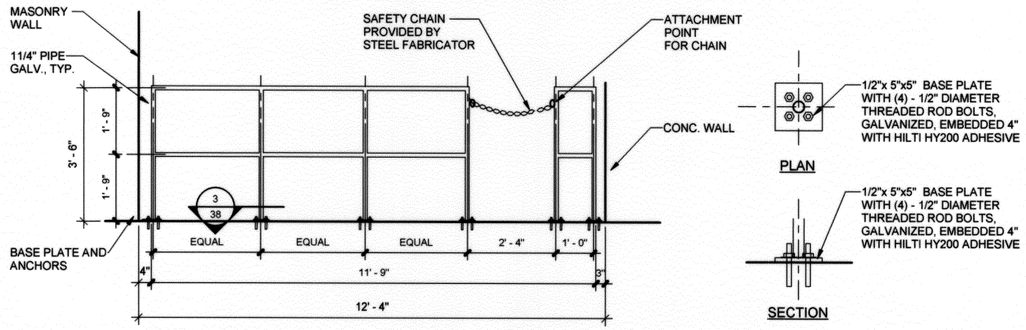

2 / 38 GUARDRAIL ELEVATION
1/2" = 1'-0"

3 / 38 POOL PIT GUARD RAIL BASE
1 1/2" = 1'-0"

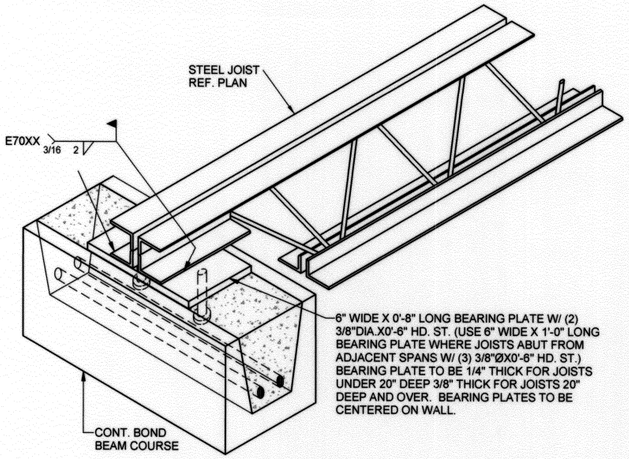

4 / 38 TYP. JOIST BRG. @ CMU WALL
NO SCALE

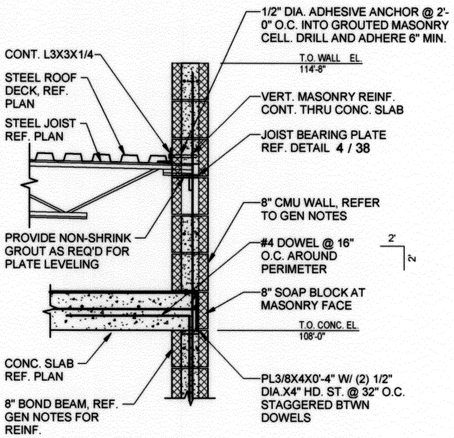

5 / 38 CHEMICAL STORAGE ROOF DETAIL
3/4" = 1'-0"

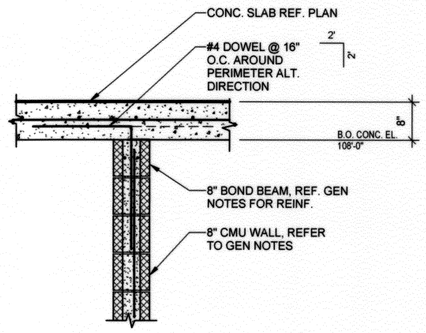

6 / 38 CHEMICAL STORAGE ROOF
3/4" = 1'-0"

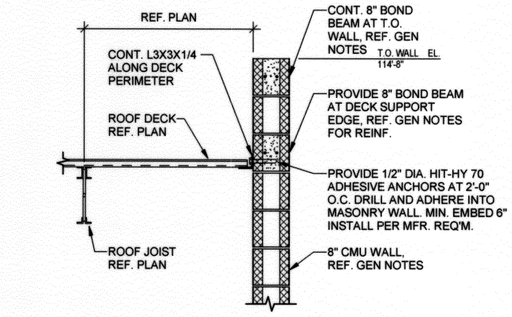

7 / 38 DECK EDGE CONN TO WALL
3/4" = 1'-0"

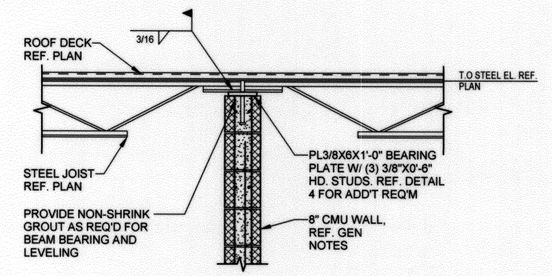

8 / 38 GIRDER DETAIL
3/4" = 1'-0"

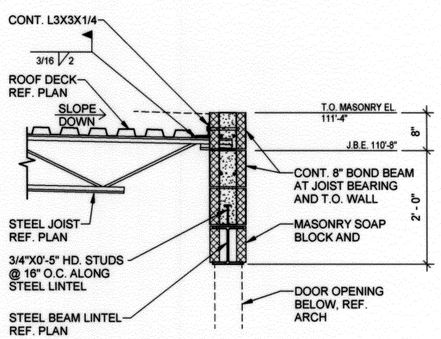

9 / 38 SECTION AT SCUPPER
3/4" = 1'-0"

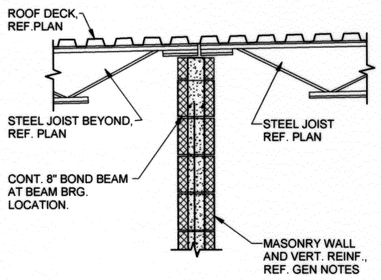

10 / 38 CENTER WALL CONNECTION
3/4" = 1'-0"

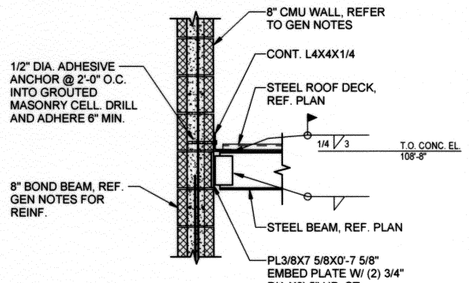

11 / 38 ROLLED MEMBER CONN
3/4" = 1'-0"

PEC
PROFESSIONAL ENGINEERING CONSULTANTS, P.A.
CHEROKEE BUILDING
4150 S. 100TH E. AVE., SUITE 401
TULSA, OK 74146
918-664-5400
www.pec1.com

GEOFFREY K. BLISS 24966 LICENSED PROFESSIONAL ENGINEER
10/24/16

GH2 ARCHITECTS

S502 FRAMING DETAILS

PROJECT NO. 147180 CONTRACT # 147180

TULSA PARKS DEPARTMENT
LACY POOL RECONSTRUCTION

CITY OF TULSA, OKLAHOMA
ENGINEERING SERVICES DEPARTMENT

PLANS AND ESTIMATES PREPARED BY:
GH2 ARCHITECTS, LLC.

REVISION	BY	DATE

PLAN SCALE:	DRAWN	CTM	10/24/2016	APPROVED:
	DESIGNED	CTM	10/24/2016	
	SURVEY			
PROFILE SCALE:	PROJ. MGR.		10/26/16	
HORIZONTAL:	LEAD ENGR.			
	FIELD MGR.		10/26/16	
VERTICAL	RECOMMENDED		10/26/16	CITY ENGINEER
	DESIGN MANAGER			

FILE: DRAWING: S502
DATE: 11.11.16
ATLAS PAGE NO: 116
SHEET 38 OF 74 SHEETS

10/24/2016 12:09:29 PM

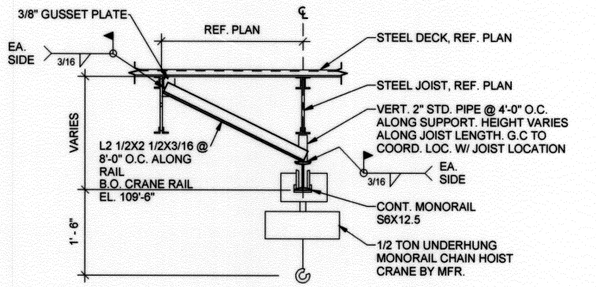

1 / 39 CRANE DETAIL
3/4" = 1'-0"

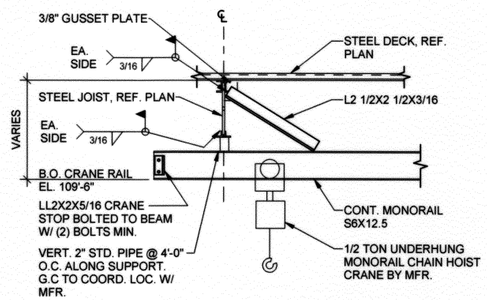

2 / 39 CRANE DETAIL
3/4" = 1'-0"

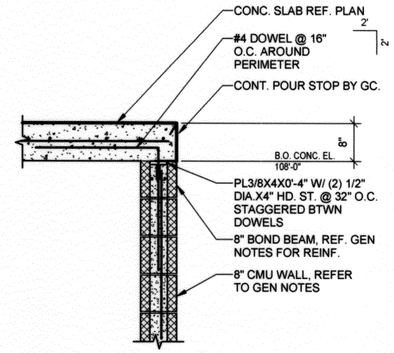

3 / 39 CHEMICAL STORAGE ROOF
3/4" = 1'-0"

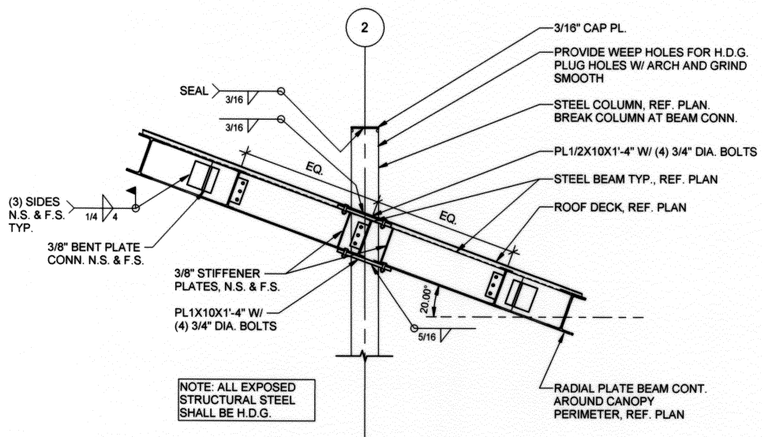

4 / 39 CANOPY SECTION
1/2" = 1'-0"

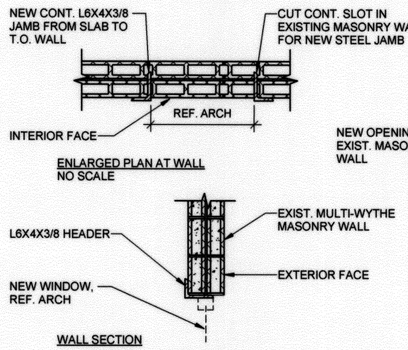

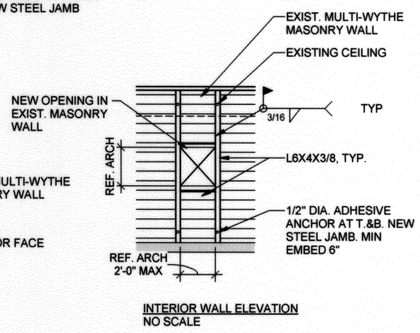

5 / 39 EXISTING WALL OPENING
3/4" = 1'-0"

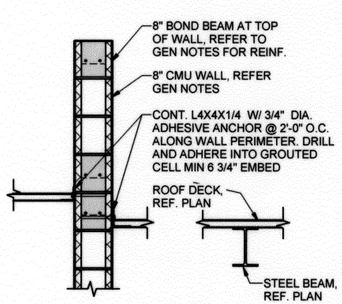

6 / 39 WALL SECTION AT CANOPY
3/4" = 1'-0"

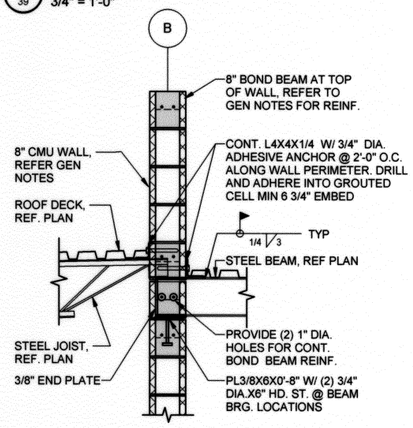

7 / 39 WALL SECTION AT CANOPY
3/4" = 1'-0"

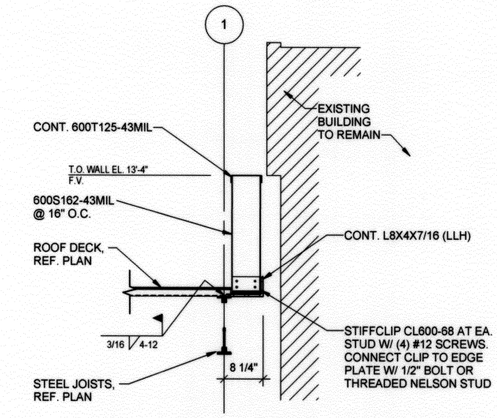

8 / 39 ROOF SECTION AT EXISTING
3/4" = 1'-0"

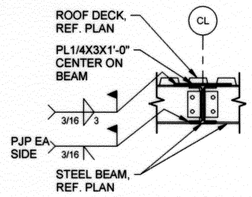

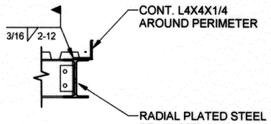

11 / 39 CANOPY SECTION
3/4" = 1'-0"

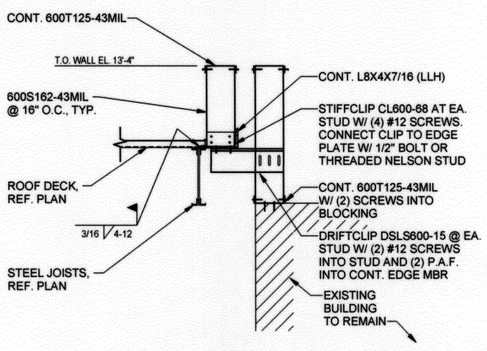

9 / 39 ROOF SECTION AT EXISTING
3/4" = 1'-0"

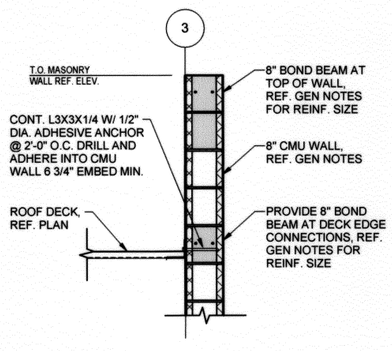

10 / 39 SECTION AT ROOF EDGE
3/4" = 1'-0"

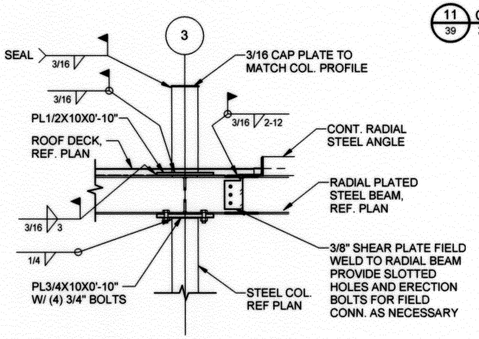

12 / 39 CANOPY SECTION
3/4" = 1'-0"

PEC
PROFESSIONAL ENGINEERING CONSULTANTS, P.A.
CHEROKEE BUILDING
4150 S. 100TH E. AVE., SUITE 401
TULSA, OK 74146
918-664-5400
www.pec1.com

GH2 ARCHITECTS

S503 FRAMING DETAILS

PROJECT NO. 147180 CONTRACT # 147180

TULSA PARKS DEPARTMENT
LACY POOL RECONSTRUCTION

CITY OF TULSA, OKLAHOMA
ENGINEERING SERVICES DEPARTMENT

PLANS AND ESTIMATES PREPARED BY:
GH2 ARCHITECTS, LLC.

GEOFFREY K. BLISS 24966 — 10/24/16

REVISION	BY	DATE

PLAN SCALE:	DRAWN	CTM	10/24/2016	APPROVED:
	DESIGNED	CTM	10/24/2016	
	SURVEY			
PROFILE SCALE:	PROJ. MGR.	GKB	10/24/16	
HORIZONTAL:	LEAD ENGR.			
	FIELD MGR.	BSM	10/24/16	
VERTICAL	RECOMMENDED DESIGN MANAGER	HAS	10/24/16	CITY ENGINEER

FILE: DRAWING: S502 — DATE: 11.11.16

ATLAS PAGE NO: 116 — SHEET 39 OF 74 SHEETS

10/24/2016 12:09:30 PM

HVAC & PLUMBING SYMBOL SCHEDULE

SYMBOL	DESCRIPTION
	DOMESTIC COLD WATER LINE (CW)
	EXISTING DOMESTIC COLD WATER LINE (CW)
	DOMESTIC HOT WATER LINE (HW)
	EXISTING DOMESTIC HOT WATER LINE (HW)
	HOT WATER RECIRC LINE (HWC)
	EXISTING HOT WATER RECIRC LINE (HWC)
F	FIRE PROTECTION LINE (F)
	BELOW WASTE LINE (W)
	EXISTING BELOW WASTE LINE (W)
	PLUMBING VENT LINE (V)
	EXISTING PLUMBING VENT LINE (V)
	NATURAL GAS LINE (G)
FD-#	FLOOR DRAIN
FCO ○	CLEANOUT (FLOOR)
YCO ○	CLEANOUT (FLOOR)
2-WAY YCO ○○	2-WAY CLEANOUT (FLOOR)
WCO	WALL CLEANOUT
%%UP-#	PLUMBING FIXTURE CALLOUT
WHA#	WATER HAMMER ARRESTOR - PDI SIZE
FPWH	FREEZE PROOF WALL HYDRANT
DHWP	DOMESTIC HOT WATER PUMP
%%UWH-#	WATER HEATER CALLOUT
FHC	FIRE HOSE CABINET
	CAP
	PIPE RISE
	PIPE DROP
	UNION OR FLANGE CONNECTION
	TOP CONNECTION, 45° OR 90°
	BOTTOM CONNECTION, 45° OR 90°
	SIDE CONNECTION
	CAPPED OUTLET
	VALVE IN DROP
	VALVE IN RISER
	GATE VALVE / SHUT OFF VALVE
	BALL VALVE
	BUTTERFLY VALVE
	CHECK VALVE
	STRAINER
	THERMOMETER
24x12	(UP) DUCT SECTION, POSITIVE PRESSURE (FIRST SIZE IS TOP DIMENSION)
24x12	(DOWN) DUCT SECTION, POSITIVE PRESSURE (FIRST SIZE IS TOP DIMENSION)
	EXHAUST DUCT DROP
	EXHAUST DUCT RISER
	TURNING VANES
18x12	DUCT SIZE, FIRST FIGURE IS SIDE SHOWN (CLEAR INSIDE DIMENSIONS)
OBD	OPPOSED BLADE DAMPER
EF	EXHAUST FAN
EA	EXHAUST AIR
FD ▲	FIRE DAMPER IN WALL (VERTICAL POSITION)
FD ◆	FIRE DAMPER IN FLOOR (HORIZONTAL POSITION)
SD	SMOKE DAMPER
FSD	COMBINATION FIRE/SMOKE DAMPER (VERTICAL POSITION)
FSD	COMBINATION FIRE/SMOKE DAMPER (HORIZONTAL POSITION)
(T)	ELECTRIC OR DDC THERMOSTAT
M.C.	MECHANICAL CONTRACTOR
P.C.	PLUMBING CONTRACTOR
E.C.	ELECTRICAL CONTRACTOR
G.C.	GENERAL CONTRACTOR
EUH	ELECTRIC UNIT HEATER
GUH	GAS UNIT HEATER
111	ROOM CALLOUT
#	REVISION NUMBER
	CONNECT NEW TO EXISTING. VERIFY EXACT LOCATION.
(#)	REFER TO PLAN NOTES
(E)	EXISTING EQUIPMENT OR MATERIAL DESIGNATION

NOT ALL MAY BE USED ON PROJECT

GENERAL NOTES

1. VERIFY JOB SITE CONDITIONS AND DIMENSIONS BEFORE BEGINNING WORK. PLANS ARE SCHEMATIC IN NATURE. LAYOUT IS BASED ON BEST AVAILABLE INFORMATION. CONTRACTOR SHALL FIELD VERIFY EXISTING CONDITIONS AND DIMENSIONS.
2. NO PIPING, DUCTWORK, ETC. SHALL PENETRATE STRUCTURAL MEMBERS.
3. PROVIDE MISCELLANEOUS CUTTING, PATCHING AND REPAIRING OF FINISHES, ROOF, WALLS, ETC., AS REQUIRED TO ACCOMMODATE THE NEW WORK.
4. G.C. IS TO PATCH ANY OPENINGS IN CORRIDORS REQUIRED TO BE CONSTRUCTED TO LIMIT THE TRANSFER OF SMOKE AND IN SMOKE BARRIERS AS REQUIRED TO MEET CODE REQUIREMENTS. SEE ARCHITECTURAL DRAWINGS FOR LOCATIONS.
5. IT IS THE CONTRACTOR'S RESPONSIBILITY TO FIELD VERIFY EXACT LOCATION, CONFIGURATION AND ROUTING OF EXISTING SYSTEMS REQUIRED TO REMAIN IN OPERATION DURING THE PROJECT TO PREVENT DAMAGE DURING DEMOLITION AND PHASING.
6. REMOVE ALL EXISTING EQUIPMENT, DUCTWORK AND PIPING THAT IS NOT REQUIRED FOR A WORKING INSTALLATION.
7. COORDINATE ALL WORK WITH OTHER TRADES PRIOR TO INSTALLATION.
8. UNLESS OTHERWISE INDICATED, INSTALL ALL SPACE THERMOSTATS AND OTHER OCCUPANT ADJUSTABLE CONTROL DEVICES SAME HEIGHT AS ADJACENT LIGHT SWITCHES, BUT IN NO CASE HIGHER THAN 48 INCHES ABOVE FINISHED FLOOR PER ADA REQUIREMENTS. COORDINATE EXACT HEIGHT WITH ARCHITECT PRIOR TO INSTALLATION.
9. ALL CUTTING AND PATCHING SHALL BE CLOSELY COORDINATED WITH THE G.C.
10. COORDINATE ROUTING OF PLUMBING WITH DUCTWORK, LIGHTS, ARCHITECTURAL CEILING AND STRUCTURAL ELEMENTS. PIPING SHALL RISE AND DROP, JOG OR OFFSET AS REQUIRED TO AVOID CONFLICTS. DUCTWORK SHALL TAKE PRECEDENCE OVER ALL PIPING, EXCEPT WHERE GRADE MUST BE MAINTAINED FOR DRAINAGE. REWORK OF INSTALLED WORK TO RESOLVE CONFLICTS RISING FROM LACK OF COORDINATION SHALL NOT JUSTIFY AN INCREASE IN THE CONTRACT AMOUNT.
11. ALL DIFFUSERS ARE 4-WAY BLOW UNLESS INDICATED OTHERWISE ON THE DRAWINGS.
12. FLEXIBLE DUCTWORK IS ALLOWED ON RUNOUTS TO SUPPLY DIFFUSERS ONLY. UTILIZE ONLY ABOVE LAY-IN ACCESSIBLE CEILINGS. DO NOT INSTALL FLEX DUCT ABOVE HARD CEILINGS OR WHERE EXPOSED. A MAXIMUM LENGTH OF 6'-0" MAY BE USED AT EACH CONNECTION.
13. SEAL DUCTWORK AS CALLED OUT BELOW USING HARDCAST DT TAPE AND FTA-20 ADHESIVE OR HARDCAST AFG-1402 "FOIL GRIP" PER MANUFACTURERS INSTRUCTIONS. SEAL TO SMACNA SEAL CLASS A:

TYPE OF DUCT	APPLY TO JOINTS
EXHAUST DUCT (ROUND OR RECT)	TRANSVERSE AND LONGITUDINAL
LOW VELOCITY SUPPLY AND RETURN (RECT)	TRANSVERSE AND LONGITUDINAL
LOW VELOCITY SUPPLY (ROUND)	TRANSVERSE AND LONGITUDINAL

14. INSTALL BALANCE DAMPER WITH STANDOFF AND LOCKING QUADRANT IN AN ACCESSIBLE LOCATION AT EACH RUNOUT TO SUPPLY DIFFUSERS, EXHAUST GRILLES, AND RETURN GRILLES WHERE AIRFLOW IS INDICATED, OR AS INDICATED OTHERWISE.
15. ALL PENETRATIONS THROUGH FIRE RATED ASSEMBLIES SHALL BE FIRE STOPPED BY THE TRADE MAKING THE PENETRATION. REFER TO ARCHITECTURAL DRAWINGS AND SPECIFICATIONS FOR REQUIREMENTS.
16. DO NOT ROUTE PIPING OR DUCTWORK OVER ELECTRICAL PANELS OR EQUIPMENT. PIPING OR DUCTWORK SHALL NOT BE ROUTED THROUGH ELECTRICAL ROOMS, TELECOM ROOMS OR ELEVATOR EQUIPMENT ROOMS UNLESS SPECIFICALLY SERVING THAT ROOM. COORDINATE WITH E.C. PROVIDE WATERTIGHT DRIP PAN WITH DRAIN TO NEAREST APPROVED RECEPTOR WHERE REQUIRED.
17. COORDINATE SIZE AND LOCATION OF ACCESS DOORS IN CONSTRUCTION REQUIRED FOR ACCESS TO MECHANICAL EQUIPMENT WITH G.C.
18. ALL WORK IS TO CONFORM WITH APPLICABLE CODES AND STANDARDS.
19. DUCT SIZES SHOWN ARE ACTUAL INSIDE CLEAR DIMENSIONS. INCREASE SHEET METAL DIMENSIONS AS REQUIRED TO ACCOMMODATE DUCT LINER WHERE LINER IS SPECIFIED.
20. ALL EQUIPMENT SUPPORT STANDS SHALL BE PRIMED AND PAINTED WITH EPOXY ENAMEL.
21. REFER TO ARCHITECTURAL REFLECTED CEILING PLANS FOR EXACT LOCATION OF ALL CEILING MOUNTED AIR DISTRIBUTION DEVICES.
22. PAINT INSIDE OF DUCTWORK BLACK ANYWHERE VISIBLE THROUGH FACE OF GRILLE OR DIFFUSER.
23. UNDERGROUND-TYPE UTILITY MARKER: PROVIDE A CAST ALUMINUM UTILITY MARKER AT EVERY 100 FEET FOR ALL UNDERGROUND UTILITIES. 4"X7" TOP WITH 10" MINIMUM SPIKE; LABEL WITH THE APPROPRIATE UTILITY. MARKERS AS MANUFACTURED BY LAKE SHORE MARKERS, ERIE, PENNSYLVANIA.
24. CONTRACTOR SHALL FURNISH AND INSTALL ALL LOW VOLTAGE WIRING AND ASSOCIATED CONDUIT REQUIRED FOR MECHANICAL CONTROL SYSTEM. WIRING SHALL BE IN CONDUIT INSIDE WALLS, IN ROOMS WITH EXPOSED CEILINGS, AND ABOVE HARD CEILINGS. LINE VOLTAGE WIRING AND ASSOCIATED CONDUIT SHALL BE PROVIDED AND INSTALLED BY E.C. CONTROL SYSTEM SHALL BE INSTALLED IN ACCORDANCE WITH SPECIFICATIONS.
25. ALL CONTROL DAMPERS AND MOTOR OPERATORS SHALL BE FURNISHED AND INSTALLED BY THE CONTRACTOR.
26. COORDINATE ACCESS TO EQUIPMENT AND VALVES INSTALLED ABOVE 'HARD' CEILINGS AND IN MASONRY CHASES WITH GENERAL CONTRACTOR. PROVIDE LOCKING ACCESS DOORS FOR INSTALLATION BY CONTRACTOR AS REQUIRED TO SERVICE CONCEALED DAMPERS, VALVES AND EQUIPMENT. CEILING ACCESS DOORS FOR FIRE DAMPERS, SMOKE DAMPERS AND FIRE SMOKE DAMPERS FURNISHED AND INSTALLED BY CONTRACTOR.
27. CONTRACTOR TO INSTALL TEMPORARY FILTERS OVER ALL RETURN AND EXHAUST GRILLES IN WORK AREA DURING CONSTRUCTION.
28. THESE DRAWINGS ARE ACCOMPANIED BY SPECIFICATIONS. REFER TO SPECIFICATIONS FOR FURTHER INFORMATION.
29. EQUIPMENT THAT REQUIRES MAINTENANCE SHALL BE LOCATED A MINIMUM OF 10'-0" FROM THE BUILDING ROOF EDGE WHERE REQUIRED BY CODE.

PIPING & VALVE IDENTIFICATION SCHEDULE

SERVICE (AND PIPE LABEL)	VALVE TAG #	TAG SHAPE	TAG SIZE	COLOR OF BACKGROUND	COLOR OF LETTERING
DOMESTIC COLD WATER	CW	ROUND	1-1/2"	GREEN	WHITE
DOMESTIC TEMPERED HOT WATER (100 DEG)	THW	ROUND	1-1/2"	YELLOW	BLACK
FIRE PROTECTION	FP	ROUND	1-1/2"	RED	WHITE

VALVE TAG CONFIGURATION

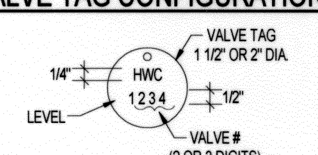

DRAWING SYMBOLS

EQUIPMENT CALLOUT

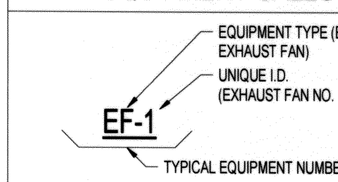

SHEET INDEX

MP001 - MECHANICAL COVER SHEET
M101 - MECHANICAL FLOOR PLAN
M301 - MECHANICAL DETAILS AND SCHEDULES
P100 - PLUMBING DEMO PLAN
P101 - PLUMBING FLOOR PLAN
P301 - PLUMBING SCHEDULES
P401 - PLUMBING DETAILS

GENERAL DEMOLITION NOTES

1. VERIFY ALL EXISTING CONDITIONS PRIOR TO BEGINNING WORK. BRING ANY DISCREPANCIES FROM THE DRAWINGS AND NOTES TO THE ARCHITECT IMMEDIATELY. MINOR CHANGES IN THE SCOPE OF THE DEMOLITION WORK SHALL NOT JUSTIFY AN ADDITIONAL COST.
2. REMOVAL OF EXISTING FIXTURES AND EQUIPMENT WILL REQUIRE ISOLATING THE PIPING RISERS OR MAINS VIA SHUT-OFF VALVES. INSTALL NEW ISOLATION VALVES WHERE REQUIRED FOR COMPLETION OF WORK
3. REMOVAL OF EXISTING PLUMBING FIXTURES AND EQUIPMENT, ETC. WILL REQUIRE CAPPING AND SEALING EXISTING MAINS OR BRANCHES AS NECESSARY AND REQUIRED TO ALLOW THE REMAINING SYSTEMS TO FULLY OPERATE WITHOUT DEGRADATION.
4. CONTRACTOR SHALL PROVIDE PROTECTIVE PLASTIC DROP CLOTHS TO PROTECT THE EXISTING OCCUPIED AREAS AND EQUIPMENT FROM DUST AND DEBRIS DURING THE CONSTRUCTION WORK, AND SHALL CLEAN THE AREAS OF ALL CONSTRUCTION DIRT DAILY, AND UPON COMPLETION OF THE WORK.
5. ALL DRAINED PIPING RISERS AND MAINS SHALL BE REFILLED WITH PROPER FLUID AND PROPERLY VENTED BY THIS CONTRACTOR, ONCE NEW WORK HAS BEEN INSTALLED.
6. COORDINATE WITH GENERAL CONTRACTOR THE REMOVAL AND REPLACEMENT OF ALL EXISTING CEILINGS, WALLS, ETC. AS REQUIRED FOR MECHANICAL DEMOLITION WORK.
7. EXISTING PIPING AND EQUIPMENT, ETC., NOT TO BE UTILIZED IN THE COMPLETED BUILDING SHALL BE DISCONTINUED OR REMOVED AS REQUIRED. ALL ENDS OF DISCONTINUED PIPING SHALL BE CAPPED IN THE NEAREST WALL, CEILING OR FLOOR SO THAT THEY ARE COMPLETELY CONCEALED. OPENINGS LEFT IN WALLS, CEILINGS, ETC., WHERE EQUIPMENT AND PIPE, ETC., ARE REMOVED AND NOT REPLACED, SHALL BE PATCHED NEATLY WITH SIMILAR MATERIAL TO ADJACENT CONSTRUCTION. REFER TO DRAWINGS DELINEATING NEW WORK FOR ADDITIONAL INFORMATION REGARDING SYSTEMS OR PORTIONS OF SYSTEMS WHERE USE IS TO BE DISCONTINUED.
8. EXISTING PIPING, FIXTURES AND EQUIPMENT THAT ARE NOT TO BE REUSED SHALL BE REMOVED AND SHALL REMAIN THE PROPERTY OF THE OWNER IF THEY WISH TO RETAIN OWNERSHIP OF SAME. IF NOT, EQUIPMENT SHALL BECOME THE PROPERTY OF THIS CONTRACTOR AND SHALL BE REMOVED FROM THE SITE AS SOON AS PRACTICAL AND DISPOSED OF IN ACCORDANCE WITH APPLICABLE LAWS AND REGULATIONS.
9. ALL CUTTING AND CHANNELING OF EXISTING BUILDING SHALL BE ACCOMPLISHED IN A NEAT AND WORKMANLIKE MANNER WITHOUT REMOVAL OF EXCESS MATERIALS. THIS CONTRACTOR SHALL PATCH AND REPLACE WITH MATERIAL SIMILAR TO ADJACENT CONSTRUCTION.
10. WHERE EXISTING PIPING AND EQUIPMENT, ETC., THAT ARE TO BE UTILIZED IN THE COMPLETED PROGRAM CONFLICT WITH NEW CONSTRUCTION AND THE REQUIRED DEMOLITION, THEY SHALL BE RELOCATED AND RECONNECTED TO MAINTAIN THE DESIRED SERVICE.
11. PORTIONS OF EXISTING SYSTEMS MAY BE SHOWN FOR CLARITY EVEN THOUGH IT MAY NOT BE NECESSARY TO MODIFY OR REVISE THEM. ALL EXISTING SYSTEMS ARE SHOWN BASED ON ORIGINAL OR REMODEL BUILDING DRAWINGS. CONTRACTOR TO VERIFY ALL EXISTING CONDITIONS.
12. ALL WORK MUST BE COORDINATED AND SCHEDULED WITH THE OWNER AND OCCUPANTS OF THIS BUILDING SO AS TO PROVIDE THE LEAST AMOUNT OF DISRUPTION OF BUILDING ACTIVITIES AS POSSIBLE. MAINTAIN CONDITIONED SPACE FOR ALL OWNER OCCUPIED AREAS DURING CONSTRUCTION.
13. ALL ACCESSIBLE ABANDONED PIPING AND DUCTWORK SHALL BE REMOVED AND PROPERLY DISPOSED OF.

GH2 ARCHITECTS

PROFESSIONAL ENGINEERING CONSULTANTS, P.A.
4150 S. 100TH EAST AVE., SUITE 401
CHEROKEE BLDG. TULSA, OK 74146
918-664-5400 www.pec1.com

LICENSED PROFESSIONAL ENGINEER JESSICA E. McFARLAND 28394 10/24/16 OKLAHOMA

MP001 MECHANICAL COVER SHEET

PROJECT NO. 147400 CONTRACT # 147400

TULSA PARKS DEPARTMENT
LACY POOL RECONSTRUCTION

CITY OF TULSA, OKLAHOMA
ENGINEERING SERVICES DEPARTMENT

PLANS AND ESTIMATES PREPARED BY:
GH2 ARCHITECTS, LLC.

REVISION	BY	DATE	PLAN SCALE:	DRAWN	AJD	10/24/2016	APPROVED:
			N/A	DESIGNED	AJD	10/24/2016	
				SURVEY			
			PROFILE SCALE:	PROJ. MGR.	GG 10/16		
			HORIZONTAL: N/A	LEAD ENGR.			
				FIELD MGR.	RBV 10/16		
			VERTICAL N/A	RECOMMENDED: HAS 10/16 DESIGN MANAGER			CITY ENGINEER
			FILE:	DRAWING:MP001			DATE: 11.11.16
			ATLAS PAGE NO: 116				SHEET 40 OF 74 SHEETS

© 2016 COPYRIGHT GH2 ARCHITECTS, LLC

10/24/2016 1:03:29 PM

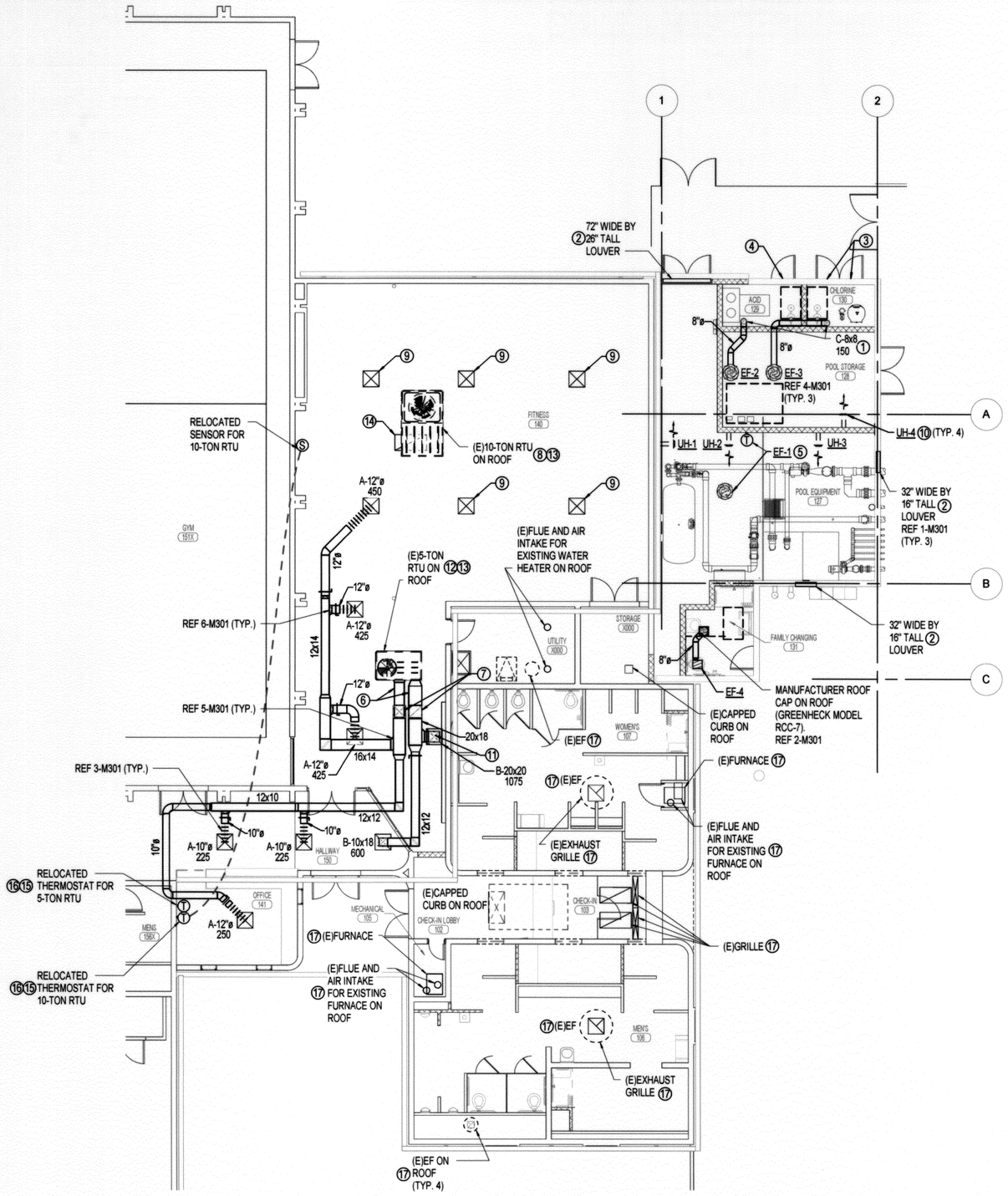

A HVAC PLAN

1/8" = 1'-0"

GENERAL NOTES

1. PLANS ARE SCHEMATIC IN NATURE. LAYOUT IS BASED ON BEST AVAILABLE INFORMATION. CONTRACTOR SHALL FIELD VERIFY EXISTING CONDITIONS AND DIMENSIONS.
2. VERIFY ALL EXISTING CONDITIONS PRIOR TO BEGINNING WORK. BRING ANY DISCREPANCIES FROM THE DRAWINGS AND NOTES TO THE ATTENTION OF THE ARCHITECT IMMEDIATELY.
3. THE CONTRACTOR IS TO CLOSELY COORDINATE WITH THE G.C. FOR PATCHING OF HOLES THAT ARE LEFT IN THE WALLS, FLOOR, CEILING OR ROOF AFTER REMOVAL OF EXIST EQUIPMENT OR FIXTURES. ALL PATCHING SHALL BE FINISHED TO MATCH THE EXISTING SURROUNDINGS FINISHES OR AS OTHERWISE DIRECTED BY THE ARCHITECT.
4. ALL ACCESSIBLE ABANDONED PIPING, DUCTWORK OR EQUIPMENT SHALL BE REMOVED AND PROPERLY DISPOSED OF.

PLAN NOTES (X)

1. EXTEND EXHAUST GRILLE DOWN TO 12" AFF.
2. PROVIDE LOUVER SIMILAR TO GREENHECK GCI-402 (DRAINABLE BLADE, GRAVITY BACKDRAFT DAMPER AND BIRDSCREEN REQUIRED). LOUVERS TO LINE UP WITH CMU BLOCK COURSE WORK. REFER TO ARCH FOR COLOR AND EXACT LOCATION.
3. 1" DOOR UNDERCUT.
4. 1 1/2" DOOR UNDERCUT.
5. SET THERMOSTAT TO 90º F. DO NOT INSTALL IN DIRECT AIRFLOW OF ELECTRIC UNIT HEATERS.
6. EXISTING EXTERIOR ROOFTOP DUCT TO REMAIN. REMOVE / DEMO THE EXISTING EXTERIOR DUCT INSULATION AND REPLACE. REFER TO THE SPECIFICATIONS FOR NEW INSTLLATION REQUIREMENTS.
7. EXISTING TO REMAIN DUCT DROPS THROUGH ROOF. DEMO ALL EXISTING INTERIOR DUCT AFTER DROP THROUGH THE ROOF.
8. EXISTING RTU TO REMAIN. CONTRACTOR TO CLEAN INTERIOR AND EXTERIOR OF RTU TO LIKE NEW CONDITION.
9. NEW SUPPLY DIFFUSER SIMILAR TO TITUS TMS WITH 24"x24" LAY-IN PANEL. ALUMINUM CONSTRUCTION. COLOR BY ARCHITECT. FIELD VERIFY EXACT SIZE OF DIFFUSER DUCT CONNECTION AND PROVIDE NEW WITH SAME SIZE.
10. COORDINATE EXACT LOCATION OF UNIT HEATERS. DO NOT INSTALL UNIT HEATERS SO THE FAN BLOWS DIRECTLY AT PIPING, EQUIPMENT OR THERMOSTATS. INSTALL HEATERS AS HIGH AS POSSIBLE. REFER TO MANUFACTURER'S CLEARANCE TO COMBUSTIBLES.
11. 16"x16" DOWN WITH BALANCE DAMPER IN VERTICAL.
12. EXISTING RTU TO REMAIN. ADJUST EXISTING RTU TO PROVIDE 2000 CFM SUPPLY AIR, 1675 CFM RETURN AIR AND 325 CFM OUTDOOR AIR. CONTRACTOR TO CLEAN INTERIOR AND EXTERIOR OF RTU TO LIKE NEW CONDITION.
13. CONTRACTOR TO FIELD VERIFY IF A RETURN AIR SMOKE DETECTOR IS INSTALLED INSIDE UNIT. IF A RETURN AIR SMOKE DECTOR IS NOT INSTALLED, INSTALL A RETURN AIR SMOKE DETECTOR COMPATIBLE WITH EXISTING FIRE ALARM SYSTEM.
14. NEW RETURN GRILLE TITUS 355RL WITH 48"x24" LAY-IN PANEL. ALUMINUM CONSTRUCTION. COLOR BY ARCHITECT. NEW RETURN GRILLE TO HAVE A 46"x22" CONNECTION.
15. UNLESS OTHERWISE INDICATED, INSTALL ALL SPACE THERMOSTATS AND OTHER OCCUPANT ADJUSTABLE CONTROL DEVICES SAME HEIGHT AS ADJACENT LIGHT SWITCHES, BUT IN NO CASE HIGHER THAN 48 INCHES ABOVE FINISHED FLOOR PER ADA REQUIREMENTS. COORDINATE EXACT HEIGHT WITH ARCHITECT PRIOR TO INSTALLATION.
16. PROVIDE CLEAR PLASTIC LOCKING BOX COVER. VERIFY SIZE OF BOX COVER WITH SIZE OF EXISTING TEMPERATURE SENSOR.
17. THOROUGHLY CLEAN OR REPAIR TO A LIKE-NEW CONDITION.

PEC
PROFESSIONAL ENGINEERING CONSULTANTS, P.A.
4150 S. 100TH EAST AVE., SUITE 401
CHEROKEE BLDG. TULSA, OK 74146
918-664-5400 www.pec1.com

GH2 ARCHITECTS

PROFESSIONAL ENGINEER — JESSICA E. McFARLAND — 28394 — 10/24/16 — OKLAHOMA

M101 MECHANICAL FLOOR PLAN

PROJECT NO. 147400 CONTRACT # 147400

TULSA PARKS DEPARTMENT
LACY POOL RECONSTRUCTION

CITY OF TULSA, OKLAHOMA
ENGINEERING SERVICES DEPARTMENT

PLANS AND ESTIMATES PREPARED BY:
GH2 ARCHITECTS, LLC.

REVISION	BY	DATE

PLAN SCALE:	DRAWN	AJD	10/24/2016	APPROVED:
1/8" = 1'-0"	DESIGNED	AJD	10/24/2016	
	SURVEY			
PROFILE SCALE:	PROJ. MGR.		10/16	
	LEAD ENGR.			
HORIZONTAL: N/A	FIELD MGR.		10/16	
VERTICAL N/A	RECOMMENDED DESIGN MANAGER		10/16	CITY ENGINEER
	FILE: DRAWING: M101			DATE: 11.11.16
	ATLAS PAGE NO: 116			SHEET 41 OF 74 SHEETS

10/24/2016 1:03:45 PM

© 2016 COPYRIGHT GH2 ARCHITECTS, LLC

GRILLE & REGISTER SCHEDULE

MARK	TYPE	MANUFACTURER BASED ON	MODEL	MATERIAL		FINISH							ACCESSORIES & REMARKS	O.B.D.
				ALUM	STEEL	WHITE	ALUM	BLACK	BRONZE	CLEAR	ANODIZ.	OTHER		
A	SUPPLY DIFFUSER	TITUS	TMS	X		X							24" x 24" LAY-IN PANEL	X
B	RETURN GRILLE	TITUS	355RL	X		X							24" x 24" LAY-IN PANEL	X
C	EXHAUST GRILLE	TITUS	355RL	X		X							SURFACE MOUNT, REF PLAN FOR SIZE	X

GRILLE CALLOUT IN GRILLE AND REGISTER SCHEDULE — A - 12x12 — GRILLE SIZE

CUBIC FEET OF AIR PER MINUTE — 600 (FD) — FIRE DAMPER

GRILLE CALLOUT SYMBOL

UNIT HEATER SCHEDULE - ELECTRIC

MARK	LOC. AT ROOM	TYPE	FAN (CFM)	HEATING INPUT CAPACITY (KW / MBH)	MOTOR		ELECTRIC		SHIPPING WEIGHT (LBS)	REMARKS
					HP	RPM	V/PH/HZ	AMPS		
UH-1	127	WALL	400	5 / 17.1	—	—	208/3/60	13.9	27	①②③
UH-2	127	WALL	400	5 / 17.1	—	—	208/3/60	13.9	27	①②③
UH-3	127	WALL	400	5 / 17.1	—	—	208/3/60	13.9	27	①②③
UH-4	128	WALL	400	5 / 17.1	—	—	208/3/60	13.9	27	①②③

REMARKS:

① BASED ON RAYWALL MODEL F2F5105N 5100 SERIES VERTICAL MOUNTED FAN FORCED UNIT HEATER. 18 GAUGE WELDED STEEL CABINET WITH POWDER COATED FINISH, AUTOMATIC RESET FOR OVERHEAT PROTECTION, LOUVERED DISCHARGE FINS.
② OPTIONS: IN-UNIT TEMPERATURE CONTROL THERMOSTAT, INTERNAL SUMMER FAN SWITCH TO OPERATE FAN ONLY, WALL MOUNTING BRACKET.
③ INSTALL PER MANUFACTURER'S INSTRUCTIONS AND RECOMMENDATIONS.

EXHAUST FAN SCHEDULE

MARK	LOC AT ROOM	TYPE	MIN.CAP		TIP SPEED (FPM)	DRIVE	MOTOR					REMARKS	ACCESSORY
			CFM	ESP			HP	WATTS	RPM	SPEED	V/PH/HZ		
EF-1	127	ROOF	1,500	0.4	5,388	DIRECT	1/2	—	1725	1	115/60/1	①⑥⑦	BD, BS, CB, VI, EC, PC, NP
EF-2	129	ROOF	150	0.5	3,656	DIRECT	1/4	—	1725	1	115/60/1	②④⑦	BD, BS, CB, VI, EC, PC, NP
EF-3	130	ROOF	150	0.5	3,656	DIRECT	1/4	—	1725	1	115/60/1	②④⑦	BD, BS, CB, VI, EC, PC, NP
EF-4	131	CEILING	150	0.375	—	DIRECT	—	128	1050	1	115/60/1	③⑤⑦	VI, RC

REMARKS:

① BASED ON GREENHECK MODEL G-123-VG DIRECT DRIVE CENTRIFUGAL DOWNBLAST ROOF EXHAUST FAN. ALUMINUM HOUSING, BACKWARD INCLINED WHEEL, BALL BEARING MOTORS, SLEEVE BEARING MOTORS, MOTOR ISOLATED ON SHOCK MOUNTS, CORROSION RESISTANT FASTENERS.

② BASED ON GREENHECK MODEL G-097-VG DIRECT DRIVE CENTRIFUGAL DOWNBLAST ROOF EXHAUST FAN. ALUMINUM HOUSING, BACKWARD INCLINED WHEEL, BALL BEARING MOTORS, SLEEVE BEARING MOTORS, MOTOR ISOLATED ON SHOCK MOUNTS, CORROSION RESISTANT FASTENERS.

③ BASED ON GREENHECK FAN SP-B150 CEILING FAN. CORROSION RESISTANT GALVANIZED STEEL SCROLL AND HOUSING, NON-YELLOWING GRILLE, INTEGRAL BACKDRAFT DAMPER, SINGLE INLET FORWARD CURVED WHEEL, PLUG TYPE DISCONNECT, ADJUSTABLE MOUNTING BRACKET.

④ OPERATION: CONTINUOUS

⑤ OPERATION: WALL SWITCH WITH LIGHTS

⑥ OPERATION: TEMPERATURE SENSOR. WHEN TEMPERATURE IN POOL EQUIPMENT ROOM RISES ABOVE 90 DEGREES F, FAN TO ENERGIZE UNTIL ROOM DROPS BELOW 90 DEGREES F.

⑦ INSTALL PER MANUFACTURER'S INSTALLATION INSTRUCTIONS AND RECOMMENDATIONS.

ACCESSORIES KEY	
BD	GRAVITY BACKDRAFT DAMPER
BS	BIRD SCREEN
CB	14" CURB
VI	VIBRATION ISOLATOR KIT
EC	EC MOTOR W/ DIAL
PC	POLYESTER COATED FAN, BACKDRAFT DAMPER AND CURB
NP	ALUMINUM NAMEPLATE
RC	14" CURB MOUNTED ROOF CAP W/ BIRD SCREEN

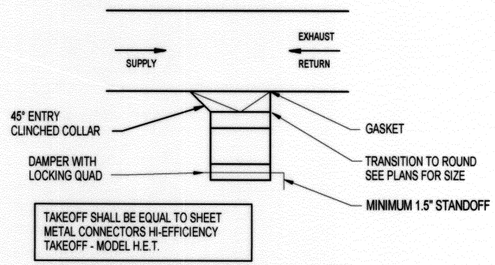

6 ROUND DUCT TAKE-OFF CONNECTION DETAIL

SCALE: NONE

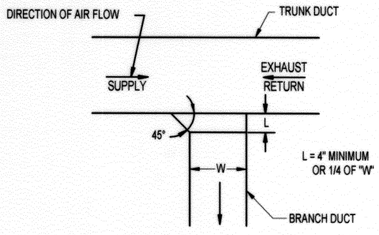

DUCT PRESSURE CLASSIFICATIONS:

		SEAL CLASS:
LOW PRESSURE SUPPLY AIR DUCTWORK	+2"WG	B
EXHAUST AIR DUCTWORK	-2"WG	A
RETURN AIR DUCTWORK	-2"WG	B
FRESH AIR DUCTWORK	-2"WG	B
RELIEF AIR DUCTWORK	+2"WG	B

5 LOW VELOCITY BRANCH CONNECTION DETAIL

SCALE: NONE

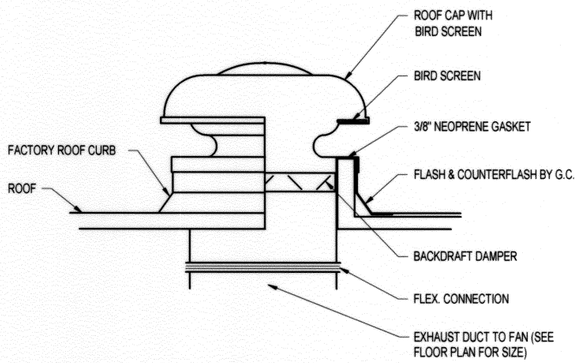

2 ROOF EXHAUST CAP DETAIL

SCALE: NONE

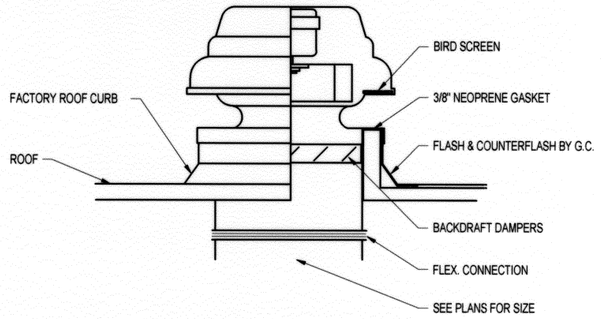

4 ROOF EXHAUST FAN DETAIL

SCALE: NONE

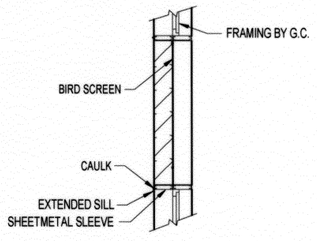

NOTE:
COORDINATE LOUVER COLOR WITH ARCHITECT PER THE MANUFACTURER'S STANDARD COLOR CHART.

1 LOUVER DETAIL - STATIONARY

SCALE: NONE

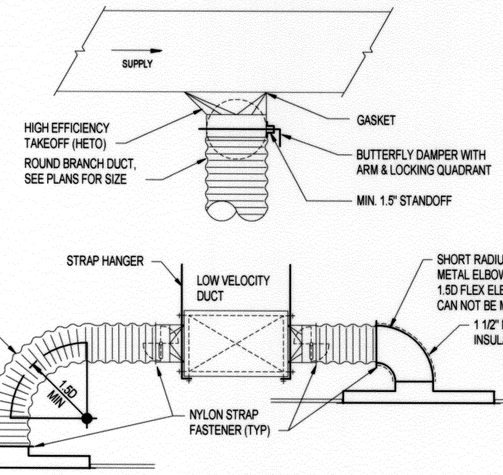

3 DIFFUSER INSTALLATION DETAIL

SCALE: NONE

GH2 ARCHITECTS

M301 MECHANICAL DETAILS AND SCHEDULES

PROJECT NO. 147400 CONTRACT # 147400

TULSA PARKS DEPARTMENT
LACY POOL RECONSTRUCTION

CITY OF TULSA, OKLAHOMA
ENGINEERING SERVICES DEPARTMENT

PLANS AND ESTIMATES PREPARED BY:
GH2 ARCHITECTS, LLC.

PROFESSIONAL ENGINEER — STATE OF OKLAHOMA — JAMES E. McFARLAND — 28304 — 10-24-16

REVISION	BY	DATE

PLAN SCALE: N/A	DRAWN	AJD	10/24/2016	APPROVED:
	DESIGNED	AJD	10/24/2016	
	SURVEY			
PROFILE SCALE:	PROJ. MGR.			
HORIZONTAL: N/A	LEAD ENGR.			
	FIELD MGR.			
VERTICAL N/A	RECOMMENDED:			CITY ENGINEER
	DESIGN MANAGER			
FILE:	DRAWING: M301			DATE: 11.11.16
ATLAS PAGE NO: 116				SHEET 42 OF 74 SHEETS

PEC
PROFESSIONAL ENGINEERING CONSULTANTS, P.A.
4150 S. 100TH EAST AVE., SUITE 401
CHEROKEE BLDG. TULSA, OK 74146
918-664-5400 www.pec1.com

© 2016 COPYRIGHT GH2 ARCHITECTS, LLC

LIGHT FIXTURE SCHEDULE

TYPE & SYMBOL	MANUFACTURER/ CATALOG NUMBER	VOLTS WATTS	LAMP QTY.	LAMP TYPE	MOUNTING	COMMENTS
A	METALUX VT2-232DR-UNV-ER82/PLUS-U	120 64	2	F32T8	SURFACE	WET LOCATION 4" WRAP AROUND FIXTURE
A1	METALUX VT2-232-DR-UNV-ER82-EB/PLUS-U	120 64	2	F32T8	SURFACE	WET LOCATION 4" WRAP AROUND FIXTURE WITH EMERGENCY BATTERY BALLAST
B	LUMARK XTOR5ANCBP	120 25	1	LED	WALL	LED WALL PACK WITH EMERGENCY BATTERY (90 MIN.)
C	NORIBACHI SBL-HEX-252-B-NW	208 400	1	LED	POLE	385W LED FLOODLIGHT MOUNTED ON 30' STEEL POLE.
D	DMF LIGHTING LD616N120EMDL30W	120 35	1	LED	SURFACE	LED CAN LIGHT WITH EM BATTERY
X	LITHONIA LQM-S-W-1-R-120-EL	120 5	1	LED	SURFACE	EMERGENCY EXIT WITH INTEGRAL BATTERY

ELECTRICAL SYMBOLS

LIGHTING SYMBOLS	
A	LIGHT FIXTURE – SEE LEGEND
X	EXIT FIXTURE
RECEPTACLE SYMBOLS	
41	DUPLEX RECEPTACLE 18" AFF TO CENTER, UON. NUMBER DENOTES CIRCUIT (TYPICAL)
GFI	RECEPTACLE 6" ABOVE COUNTER TOP GFI AS INDICATED
GFI	DUPLEX GROUND-FAULT CIRCUIT-INTERRUPTER RECEPTACLE 18" AFF TO CENTER, UON
	SPECIAL RECEPTACLE 18" AFF TO CENTER, UON
SWITCH SYMBOLS	
$	SINGLE POLE SWITCH 46" AFF TO CENTER, UON LOWER CASE LETTER DENOTES SWITCH DESIGNATION
$3	3-WAY SWITCH 46" AFF TO CENTER, UON
DISTRIBUTION SYMBOLS	
J	JUNCTION BOX
	NON-FUSED DISCONNECT
LOW VOLTAGE SYMBOLS	
▽	WALL TELEPHONE/DATA, 18" AFF TO CENTER, UON
	DESIGNATED EMERGENCY FIXTURE AND SHALL HAVE INTEGRAL BATTERY FOR EMERGENCY EGRESS LIGHTING

NOTES:

1. FIXTURES SPECIFIED ARE BASIS OF DESIGN OR EQUAL AS APPROVED BY THE ENGINEER. CONTRACTOR MAY REQUEST APPROVAL OF ALTERNATE FIXTURES DURING BIDDING.

INDEX SHEET
SCALE: NONE

PROFESSIONAL ENGINEER DEREK WAYNE PATTON 16502 OKLAHOMA

10/24/2016

E101 INDEX SHEET

PROJECT NO. 147400 CONTRACT # 147400

TULSA PARKS DEPARTMENT
LACY POOL RECONSTRUCTION

CITY OF TULSA, OKLAHOMA
ENGINEERING SERVICES DEPARTMENT

PLANS AND ESTIMATES PREPARED BY:
GH2 ARCHITECTS, LLC.

REVISION	BY	DATE

PLAN SCALE: AS NOTED
PROFILE SCALE:
HORIZONTAL: AS NOTED
VERTICAL AS NOTED

DRAWN	DWG 10/24/2016	APPROVED:
DESIGNED	DWG 10/24/2016	
SURVEY		
PROJ. MGR.	GHO 10/16	
LEAD ENGR.		
FIELD MGR.	DBV 10/16	
RECOMMENDED:		
DESIGN MANAGER	HJS 10/16	CITY ENGINEER

FILE: DRAWING: E101 DATE: 11.11.16

ATLAS PAGE NO: SHEET 43 OF 74 SHEETS

GH2 PROJECT #:

© 2016 COPYRIGHT GH2 ARCHITECTS, LLC

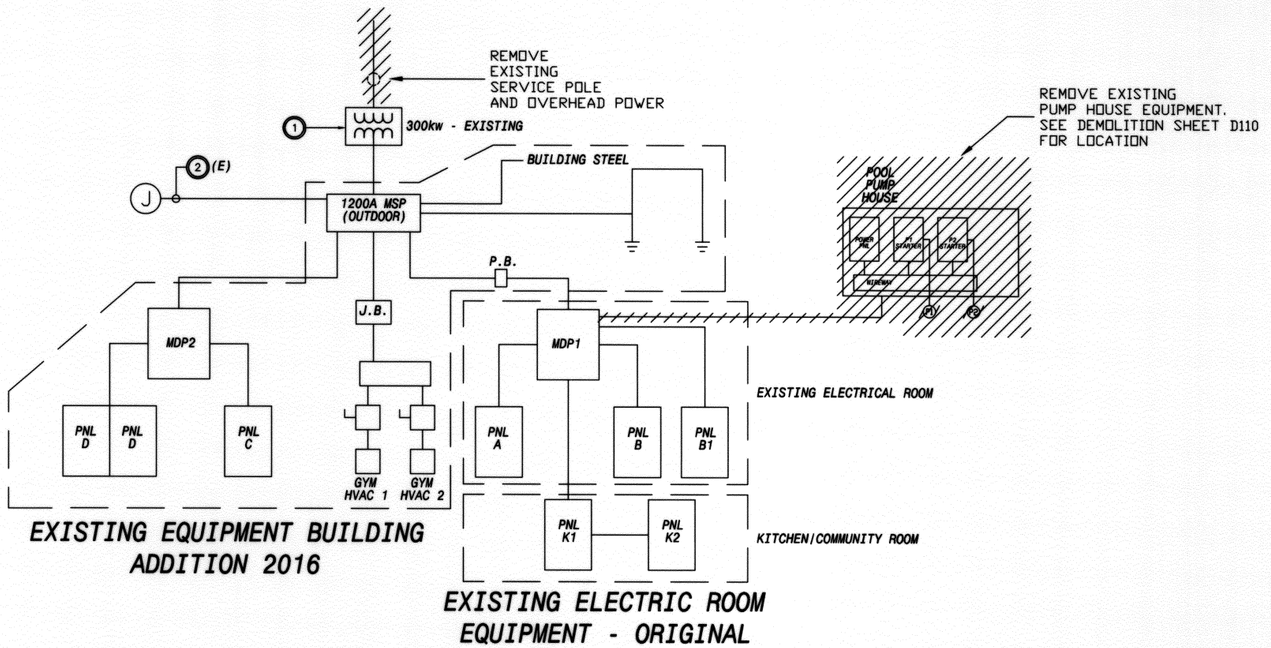

EXISTING EQUIPMENT BUILDING ADDITION 2016

EXISTING ELECTRIC ROOM EQUIPMENT - ORIGINAL BUILDING

EXISTING BUILDING RISER DIAGRAM

NOTES

1. EXISTING PAD MOUNT TRANSFORMER TO BE FED FROM NEW UNDERGROUND SERVICE.
2. EXISTING 4" EMT CONDUIT AT EXPOSED CEILING, FROM MAIN SERVICE PANEL TO ABOVE STORAGE ROOM.

REGISTERED PROFESSIONAL ENGINEER
DEREK WAYNE GARNER
16502
OKLAHOMA

10/24/2016

REVISION	BY	DATE

E102 EXISTING ONE-LINE DIAGRAM

PROJECT NO. 147400 CONTRACT # 147400

TULSA PARKS DEPARTMENT
LACY POOL RECONSTRUCTION

CITY OF TULSA, OKLAHOMA
ENGINEERING SERVICES DEPARTMENT

PLANS AND ESTIMATES PREPARED BY:
GH2 ARCHITECTS, LLC.

PLAN SCALE: AS NOTED	DRAWN	DWG	10/24/2016	APPROVED:
	DESIGNED	DWG	10/24/2016	
	SURVEY			
PROFILE SCALE:	PROJ. MGR.		10/16	
	LEAD ENGR.			
HORIZONTAL: AS NOTED	FIELD MGR.		10/16	
VERTICAL AS NOTED	RECOMMENDED: DESIGN MANAGER		10/16	CITY ENGINEER
FILE:	DRAWING: E102			DATE: 10.11.16
ATLAS PAGE NO:				SHEET 44 OF 74 SHEETS

GH2 PROJECT #:

© 2016 COPYRIGHT GH2 ARCHITECTS, LLC

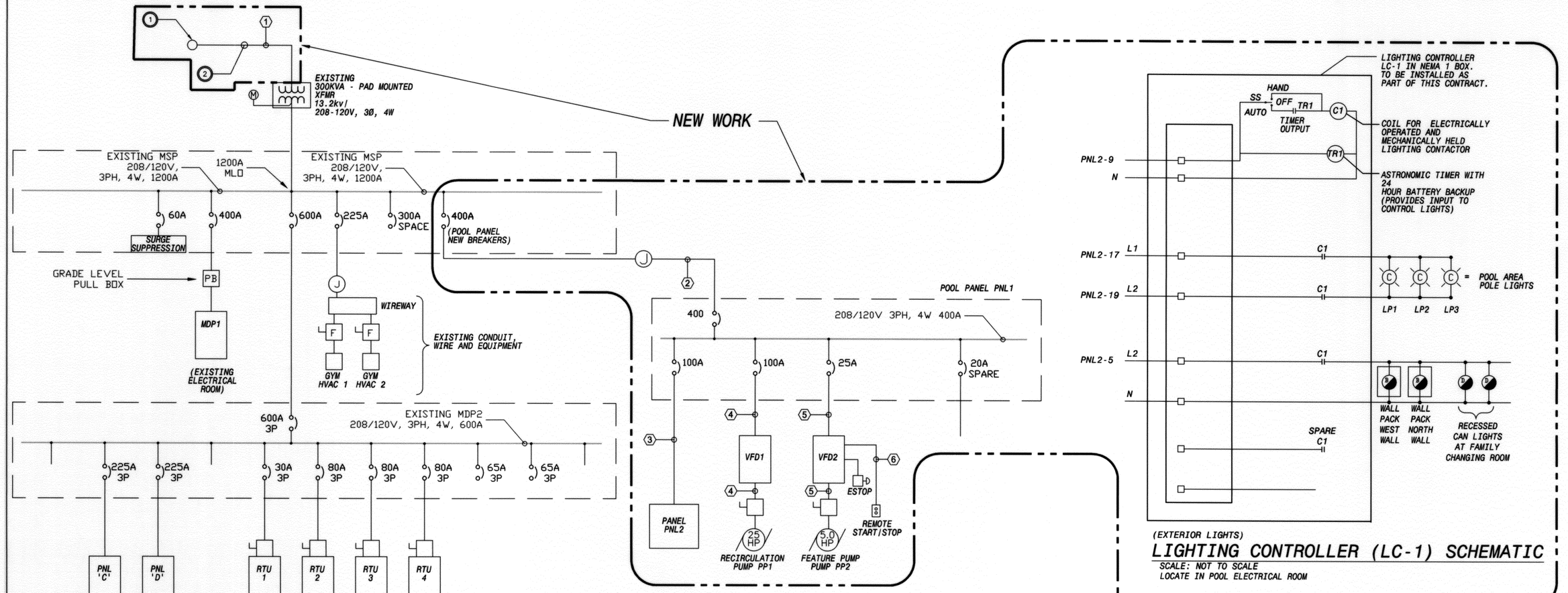

NEW ONE-LINE DIAGRAM

(EXTERIOR LIGHTS)

LIGHTING CONTROLLER (LC-1) SCHEMATIC

SCALE: NOT TO SCALE
LOCATE IN POOL ELECTRICAL ROOM

NOTES

1. FEED EXISTING TRANSFORMER FROM NEW BURIED 4" CONDUIT ORIGINATING AT EXISTING POWER POLE 186' NORTH OF TRANSFORMER. CONDUIT TO BE BURIED 48" BELOW GRADE.
2. AEP/PSO TO PROVIDE AND INSTALL NEW PRIMARY WIRE TO TRANSFORMER, AND TERMINATE WIRES.
3. SEE SHEET SP4.0 FOR ADDITIONAL INFORMATION ON PUMP CONTROLS.

LIGHTING NOTES:

1. PROVIDE AND INSTALL ALL EQUIPMENT SHOWN FOR LIGHTING CONTROL.
2. ALL CONDUIT TO LIGHT FIXTURE TO BE HIDDEN IN WALLS AND CEILING. OR UNDERGROUND, EXCEPT INSIDE EQUIPMENT ROOMS.
3. SEE LIGHTING FIXTURE SCHEDULE AND LIGHTING PLANS FOR ADDITIONAL INFORMATION.
4. POLE LIGHTS TO ALSO HAVE 120V RECEPTACLES IN BASE.

FEEDER SCHEDULE (ALL WIRE TO BE COPPER)

NO.	CONDUIT	WIRE	REMARKS	NOTES
①	(1) – 4" PVC	4–#2, 15kv CABLE, 1–#8 600V COPPER GROUND	BURY 48" BELOW GRADE	WIRE PROVIDED AND INSTALLED BY PSO
②	(1) – 4"	(4) #600 KCMIL & (1) #3G	EMT CONDUIT AT INTERIOR CEILING	
③	(1) – 1 1/2"	(4) #2, 1–#8G		
④	1" 1/2	(3) #2, 1–#8G		
⑤	1"	(3) #10, 1–#12G		
⑥	3/4"	(3) # 14		

DISCONNECT SCHEDULE

DSCONNECT	RATING	TYPE
PP1	100A/3P	NON-FUSED
PP2	30A/3P	NON-FUSED
UH–1, UH–2, UH–3, UH–4	30A/3P	NON-FUSED
EF–1, EF–2, EF–3, EFV–4	20A/1P	NON-FUSED INTEGRATED WITH SWITCH AT THE MOTOR

DEREK WAYNE CARTER 18502 OKLAHOMA REGISTERED PROFESSIONAL ENGINEER
10/24/2016

E103 ONE-LINE DIAGRAM, FEEDER SCHEDULE & SCHEMATIC
PROJECT NO. 147400 CONTRACT # 147400
TULSA PARKS DEPARTMENT
LACY POOL RECONSTRUCTION
CITY OF TULSA, OKLAHOMA
ENGINEERING SERVICES DEPARTMENT
PLANS AND ESTIMATES PREPARED BY:
GH2 ARCHITECTS, LLC.

REVISION	BY	DATE

PLAN SCALE: AS NOTED
PROFILE SCALE:
HORIZONTAL: AS NOTED
VERTICAL AS NOTED

DRAWN	DWG	10/24/2016	APPROVED:
DESIGNED	DWG	10/24/2016	
SURVEY			
PROJ. MGR.	CHS	10/16	
LEAD ENGR.			
FIELD MGR.	RBW	10/16	
RECOMMENDED:	HAS	10/16	CITY ENGINEER
DESIGN MANAGER			

FILE: DRAWING: E103 DATE: 11.11.16
ATLAS PAGE NO: SHEET 45 OF 74 SHEETS
GH2 PROJECT #:

© 2016 COPYRIGHT GH2 ARCHITECTS, LLC

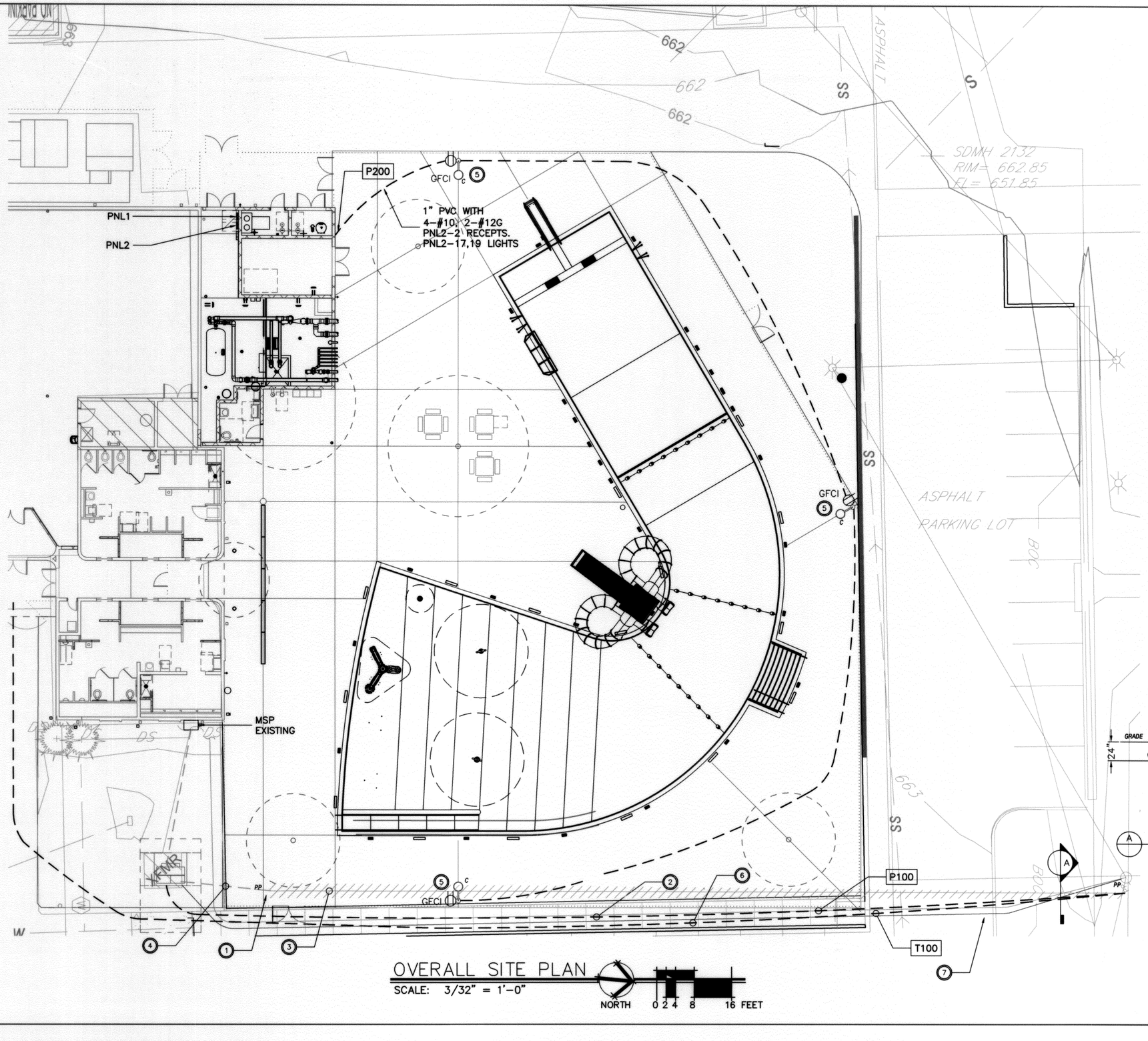

OVERALL SITE PLAN

SCALE: 3/32" = 1'-0"

NORTH 0 2 4 8 16 FEET

KEY NOTES

1. REMOVE EXISTING POWER POLE.
2. RE-FEED EXISTING TRANSFORMER FROM EXISTING POWER POLE WITH 4" CONDUIT BURIED 48" BELOW GRADE.
3. REMOVE EXISTING OVERHEAD POWER LINE.
4. REMOVE EXISTING 15kv POWER LINE FEEDING TRANSFORMER. ABANDON EXISTING CONDUIT IN PLACE.
5. INSTALL POLE WITH LIGHT FIXTURE AT THESE LOCATIONS. SEE DIAGRAM FOR LIGHTING CONTROLLER LC-1 ON SHEET E103 FOR DETAILS. INSTALL GFCI DUPLEX RECEPTACLE IN POLE BASE (18" ABOVE GROUND). SEE FIXTURE SCHEDULE SHEET E101 FOR DETAILS ON LIGHT FIXTURE AND POLE. RECEPTACLES ARE NOT SWITCHED WITH CONTACTOR.
6. INSTALL EMPTY 2 1" PVC CONDUIT 24" BELOW GRADE FOR RELOCATED PHONE LINES TO BUILDING. RUN PVC CONDUIT UP POLE AND ON THE BUILDING AND PENETRATE AND SEAL OPENING THROUGH THE BUILDING WALL. OWNER TO PROVIDE PHONE SERVICE UNDER SEPARATE CONTRACT.
7. CONTRACTOR TO BORE OR SAW CUT AND REPAIR PARKING LOT DRIVE TO INSTALL NEW CONDUITS.

GENERAL NOTES

SEE SPECIAL DETAILS AND SPECIFICATIONS FROM COUNCILMAN - HUNSACKER CONCERNING GROUNDING AND BONDING OF EQUIPMENT IN THE POOL AREA. GROUNDING SHALL ALSO BE IN STRICT COMPLIANCE WITH NEC 680.

EXTERIOR LIGHTS ARE TO BE CONTROLLED BY ASTRONOMIC TIMER LC-1. SEE DETAIL ON SHEET E103.

PHONE AND DATA CONDUITS ARE TO BE SEPARATED BY A MINIMUM OF 48".

POWER AND PHONE CONDUITS MUST BE AT LEAST 6' HORIZONTALLY FROM POOL EDGE.

RECEPTACLES IN POLES ARE TO BE FED BY GFCI CIRCUIT BREAKER IN PANEL PNL2.

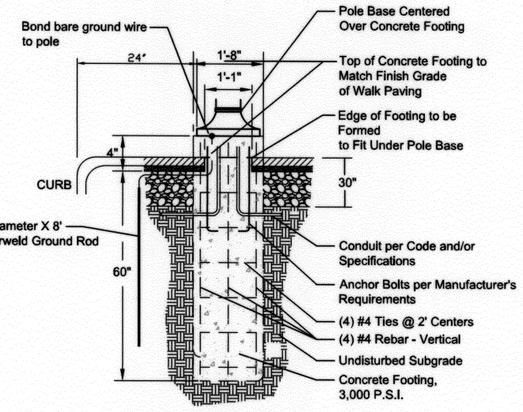

30' LIGHT POLE BASE DETAIL

SCALE: NONE

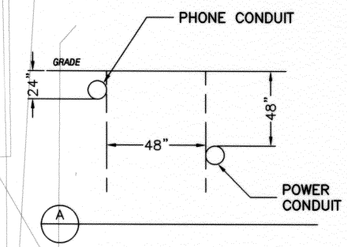

REGISTERED PROFESSIONAL ENGINEER
DEREK
WAYNE
CARTER
16502
OKLAHOMA

10/24/2016

E104 OVERALL SITE PLAN

PROJECT NO. 147400 CONTRACT # 147400

TULSA PARKS DEPARTMENT
LACY POOL RECONSTRUCTION

CITY OF TULSA, OKLAHOMA
ENGINEERING SERVICES DEPARTMENT

PLANS AND ESTIMATES PREPARED BY:
GH2 ARCHITECTS, LLC.

REVISION	BY	DATE

PLAN SCALE:	DRAWN	DWG 10/24/2016	APPROVED:
AS NOTED	DESIGNED	DWG 10/24/2016	
	SURVEY		
PROFILE SCALE:	PROJ. MGR.		10/26
HORIZONTAL: AS NOTED	LEAD ENGR.		
	FIELD MGR.		10/16
VERTICAL AS NOTED	RECOMMENDED:		10/16
	DESIGN MANAGER		CITY ENGINEER
FILE:	DRAWING: E104		DATE: 11.11.16
ATLAS PAGE NO:			SHEET 46 OF 74 SHEETS

GH2 PROJECT #:

© 2016 COPYRIGHT GH2 ARCHITECTS, LLC

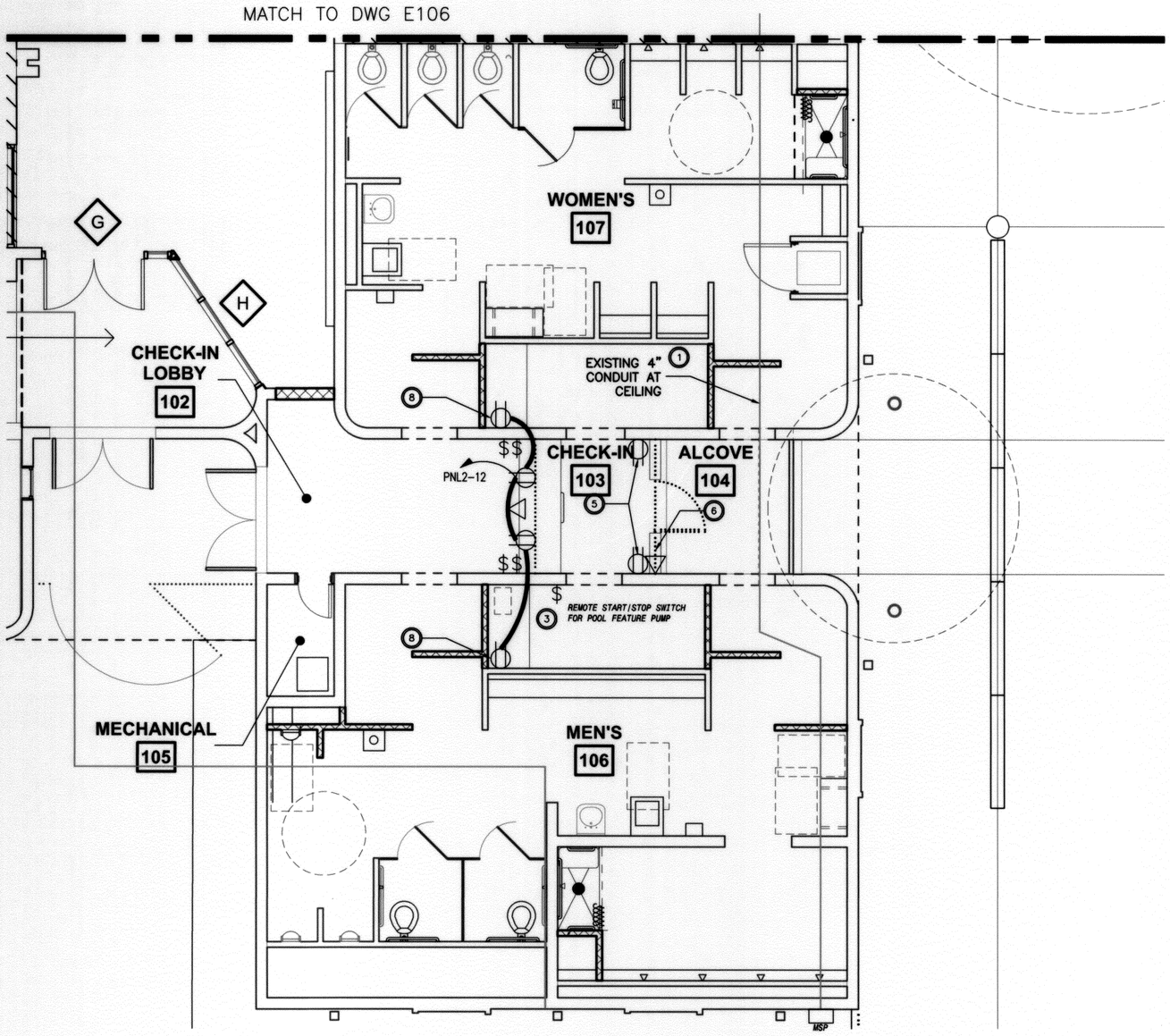

NEW POWER PLAN – LOCKER ROOMS

SCALE: 1/4" = 1'-0"

NORTH 0 1 2 4 8 FEET

NOTES

1. EMPTY EXISTING 4" CONDUIT AT CEILING FOR FEEDER TO NEW POOL PANEL PNL1.
2. EXTEND CONDUIT FROM JUST PAST WALL TO NEW PANEL PNL1. PROVIDE AND INSTALL WIRE FROM EXISTING PANEL MSP TO NEW PANEL PNL1.
3. INSTALL REMOTE START/STOP SWITCHES FOR NEW POOL PUMPS. SIGNAL TO GO BACK TO WATER LEVEL CONTROLLER IN 3/4" CONDUIT TO THE PUMP ROOM.
4. IN CHECK IN ROOM, PROVIDE TWO NEW GFCI 120V DUPLEX RECEPTACLES BELOW THE NEW COUNTER. INSTALL GROMMETS IN COUNTER TOP TO ALLOW CONNECTION TO RECEPTACLES. CONDUIT AND WIRE TO RECEPTACLES TO BE ROUTED IN 3/4" RGC CONDUIT, WITH 2–#12, 1–#12G, AT THE CEILING. CONDUIT AND WIRE TO TERMINATE IN NEW PANEL PNL2 IN POOL EQUIPMENT AREA.
5. EXISTING GFCI RECEPTACLES MOUNTED 42" AFF ARE TO REMAIN.
6. MOVE EXISTING PHONE CIRCUIT JACK TO LOCATION SHOWN OVER COUNTER ON OPPOSITE WALL.
7. LIGHTS AND SWITCHING IN AREA TO REMAIN AS IS.
8. INSTALL NEW RECEPTACLE, FLUSH MOUNT IN WALL, 42" ABOVE FINISH FLOOR. ROUTE CONDUITS IN BLOCK WALLS.

REGISTERED PROFESSIONAL ENGINEER DEREK WAYNE CARTER 18502 OKLAHOMA

10/24/2016

E105 NEW POWER PLAN

PROJECT NO. 147400 CONTRACT # 147400

TULSA PARKS DEPARTMENT
LACY POOL RECONSTRUCTION

CITY OF TULSA, OKLAHOMA
ENGINEERING SERVICES DEPARTMENT

PLANS AND ESTIMATES PREPARED BY:
GH2 ARCHITECTS, LLC.

REVISION	BY	DATE

PLAN SCALE: AS NOTED	DRAWN	DWG 10/24/2016	APPROVED:
	DESIGNED	DWG 10/24/2016	
	SURVEY		
PROFILE SCALE:	PROJ. MGR.	GF 10/16	
HORIZONTAL: AS NOTED	LEAD ENGR.		
	FIELD MGR.	PBV 10/16	
VERTICAL: AS NOTED	RECOMMENDED: DESIGN MANAGER	WAS 10/16	CITY ENGINEER
FILE:	DRAWING: E105		DATE: 11.11.16
ATLAS PAGE NO:			SHEET 47 OF 74 SHEETS

GH2 PROJECT #:

© 2016 COPYRIGHT GH2 ARCHITECTS, LLC

THE FOLLOWING CIRCUITS ARE NEEDED FOR SPECIALTY EQUIPMENT ASSOCIATED WITH THE POOL AND ARE TO BE PROVIDED BY THE ELECTRICAL CONTRACTOR. CONDUIT INSIDE THE POOL EQUIPMENT ROOMS MAY BE INSTALLED ON THE BLOCK WALLS. RECEPTACLES AND SWITCHES CAN BE SURFACE MOUNTED, EXCEPT IN ACID ROOM, CHLORINE ROOM AND FAMILY CHANGING ROOM WHERE THEY ARE TO BE INSTALLED IN THE BLOCK WALLS.

LEISURE POOL RE-CIRCULATION PUMP (PUMP PP1)

PROVIDE CIRCUIT BREAKER AND WIRE AND CONDUIT TO FEED PUMP VFD PER ONE-LINE DIAGRAM. PROVIDE WIRE AND CONDUIT FROM VFD TO PUMP LOCAL DISCONNECT AND WIRE TO PUMP. PROVIDE WIRE AND CONDUIT FROM VFD TO CHEMICAL CONTROLLER, FILTER CONTROL PANEL AND WATER FLOW SENSOR FOR PUMP INTERLOCKS. INTERLOCKS TO USE 2-#14 WIRE GOING TO CONTACTS RATED AT 120V, 3A.
PLAY FEATURE (PUMP PP2)

PROVIDE CIRCUIT BREAKER AND WIRE AND CONDUIT TO FEED PUMP VFD PER ONE-LINE DIAGRAM. PROVIDE WIRE AND CONDUIT FROM VFD TO PUMP LOCAL DISCONNECT AND WIRE TO PUMP. PROVIDE WIRE AND CONDUIT FROM VFD TO CHEMICAL CONTROLLER, FILTER CONTROL PANEL AND WATER FLOW SENSOR FOR PUMP INTERLOCKS. INTERLOCKS TO USE 2-#14 WIRE GOING TO CONTACTS RATED AT 120V, 3A. PROVIDE WIRE AND CONDUIT TO REMOTE START/STOP STATION ON POOL DECK. PROVIDE WIRE AND CONDUIT TO EMERGENCY SHUTDOWN BUTTONS TO VFD LOCATED EAST OF CHECK IN RM 103.

ALL VFDS WILL HAVE AN ANALOG SIGNAL INPUT TO CORRESPOND TO THE WATER FLOW RATE FROM THE WATER LEVEL CONTROLLER.

CHEMICAL TREATMENT ROOM (CHLORINE ROOM)

PROVIDE A DEDICATED CIRCUIT TO A COMBINATION SWITCH/RECEPTACLE FEEDING A 115 VOLT RECEPTACLE LOCATED IN THE CHEMICAL ROOM. CIRCUIT TO BE FED FROM PNL2-20.

ULTRAVIOLET SYSTEM

PROVIDE 208 2P, 30A CIRCUIT BREAKER FOR THE SYSTEM AND CONNECT IN THE NEMA 12 UV SYSTEM CONTROL BOX.

ACID ROOM

EXTEND 120V CIRCUIT FROM THE CHEMICAL CONTROLLER AND INSTALL ONE 115V COMBINATION SWITCH AND RECEPTACLE TO POWER THE FRACTIONAL HORSEPOWER ACID PUMP.

POOL CHEMICAL CONTROLLER

PROVIDE 15A DEDICATED CIRCUIT FOR WATER CHEMISTRY CONTROLLER. EXTEND 115V CIRCUITS TO RECEPTACLES IN THE ACID ROOM FOR A 115V ACID PUMP.

RUN 2-#14 CONDUCTORS IN CONDUIT TO EACH FOR THE FOLLOWING SYSTEMS FOR LINE VOLTAGE CONTROL: UV TREATMENT CONTROL PANEL, CHLORINE FEED SYSTEM PUMP/SOLENOID, MURIATIC ACID FEED SYSTEM PUMP AND POOL FLOW METER.

PROVIDE DATA COMMUNICATION SIGNAL FROM WATER CHEMISTRY CONTROL UNIT TO THE BUILDING AUTOMATION SYSTEM.

WATER LEVEL CONTROLLER

PROVIDE 115 VAC, 20A DEDICATED CIRCUIT BREAKER FOR WATER LEVEL CONTROLLER. EXTEND WIRE FROM CONTROLLER TO SOLENOID VALVE AT THE POOL FILL FUNNEL.

△ DATA RECEPTACLE WITH STAINLESS STEEL COVERPLATE MOUNTED 18" ABOVE FLOOR.

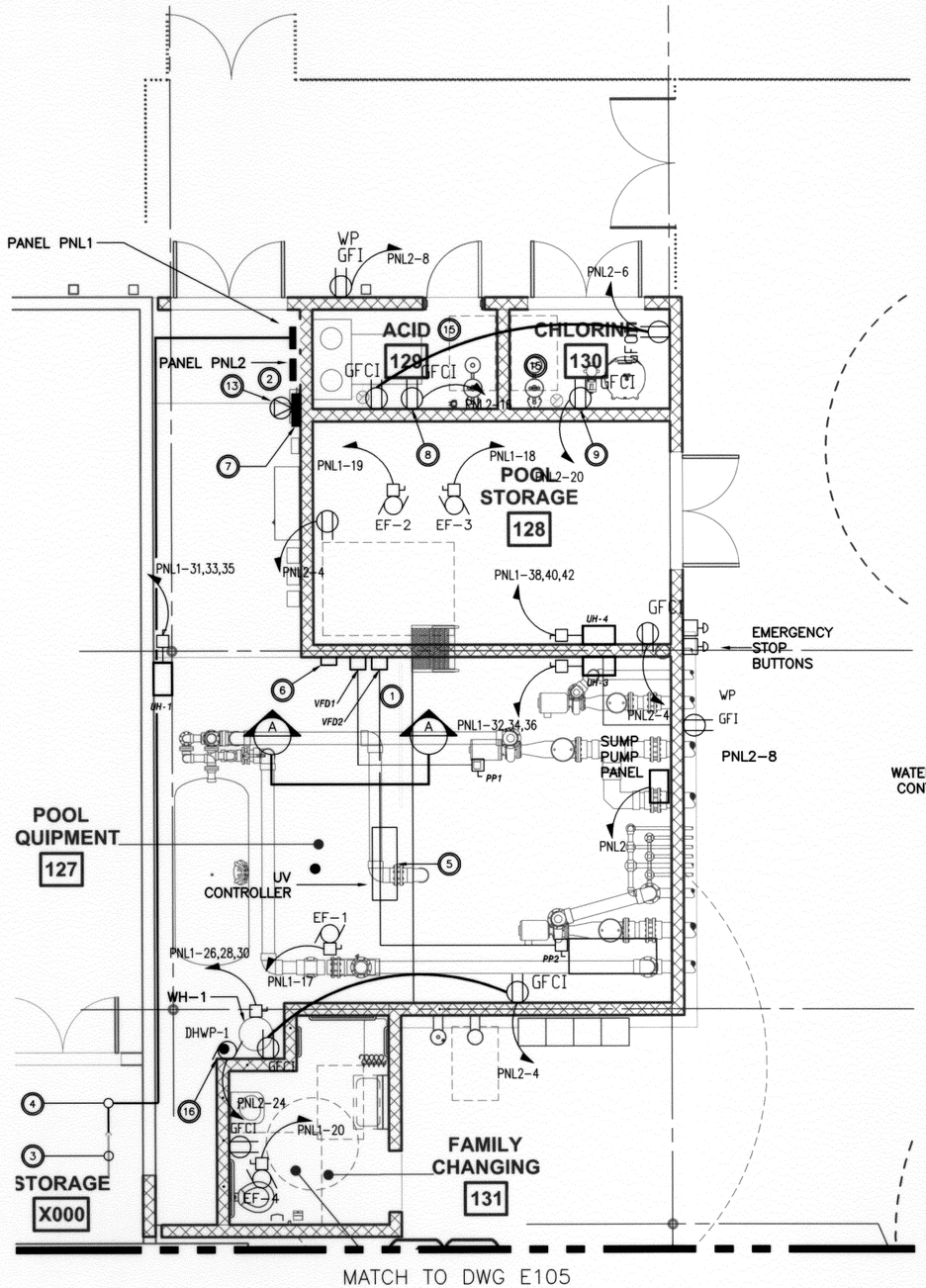

NEW POWER PLAN
SCALE: 1/4" = 1'-0"

NORTH 0 1 2 4 8 FEET

NOTES

1. CONNECT PUMP VFD'S TO NEW PANEL PNL1. REFER TO PANEL SCHEDULE FOR CONDUIT AND WIRE SIZES.
2. NEW PANEL PNL2 IS FOR CONTROLS, LIGHTS AND RECEPTACLES. REFER TO PANEL SCHEDULE FOR CIRCUITS.
3. 4" EMT CONDUIT IN CEILING CONNECTED TO PANEL MSP.
4. 4" CONDUIT (NEW) GOING TO PANEL PNL1 (CONNECT TO EMPTY CONDUIT AND INSTALL WIRE FOR PANEL PNL1)
5. UV CONTROLLER. HARDWIRE 208V, 30A WIRING TO PANEL FROM JUNCTION BOX LOCATED UNDERNEATH PANEL. FEED FROM PNL-1, CKT-13,15
6. WATER LEVEL CONTROLLER. INSTALL DEDICATED 115V RECEPTACLE ON WALL UNDERNEATH CONTROLLER FOR POWER. FEED FROM PNL2, CKT-18.
7. POOL CHEMICAL CONTROLLER. FEED WITH DEDICATED 115V RECEPTACLE BELOW CONTROLLER. FEED FROM PNL2 CKT, 20
8. ACID PUMP RECEPTACLE, FED FROM CHEMICAL CONTROLLER. INSTALL RECEPTACLE WITH ON/OFF SWITCH. FEED FROM PNL2, CKT-20
9. CHLORINE PUMP RECEPTACLE, FEED FROM CHEMICAL CONTROLLER. INSTALL RECEPTACLE WITH ON/OFF SWITCH.
10. COORDINATE WITH MECHANICAL PLAN AND LOCATION OF THERMOSTATS, CONTROL SWITCHED AND PROVIDE REQUIRED CONDUIT AND WIRE.
11. COORDINATE WITH MECHANICAL PLANS, MOUNTING HEIGHTS AND LOCATION OF EXHAUST FANS AND UNIT HEATERS.
12. PROVIDE AND INSTALL DISCONNECT AHEAD OF WATER HEATERS.
13. INSTALL J-BOX WITH COVERPLATE BELOW CHEMICAL CONTROLLER FOR PHONE/DATA LINE. ROUTE 3" EMT CONDUIT FROM J-BOX TO ABOVE CEILING AT WEIGHT ROOM. OWNER WILL ADD WIRING.
14. RECEPTACLE COVERPLATES IN POOL EQUIPMENT ROOMS TO BE STAINLESS STEEL.
15. INSTALL SEALS IN THE CONDUITS FEEDING RECEPTACLES AND LIGHTING. IN THIS ROOM TO PREVENT CHEMICALS FROM DISPERSING. COVER PLATES FOR RECEPTACLES AND SWITCHES IN THESE ROOMS TO BE VINYL COATED.
16. WIRE HOT WATER CIRCULATION PUMP DHWP-1 FOR CONTINUOUS OPERATION.

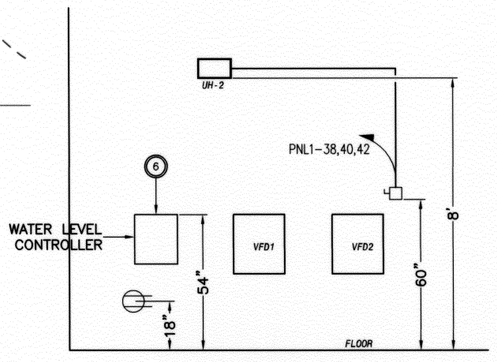

A DETAIL 1
SCALE: NONE

DEREK WAYNE GATES 18502 OKLAHOMA PROFESSIONAL ENGINEER
10/24/2016

E106 NEW POWER PLAN
PROJECT NO. 147400 CONTRACT # 147400
TULSA PARKS DEPARTMENT
LACY POOL RECONSTRUCTION
CITY OF TULSA, OKLAHOMA
ENGINEERING SERVICES DEPARTMENT
PLANS AND ESTIMATES PREPARED BY:
GH2 ARCHITECTS, LLC.

REVISION	BY	DATE

PLAN SCALE: AS NOTED
PROFILE SCALE:
HORIZONTAL: AS NOTED
VERTICAL AS NOTED
DRAWN DWG 10/24/2016
DESIGNED DWG 10/24/2016
SURVEY
PROJ. MGR. 10/10/16
LEAD ENGR.
FIELD MGR. 10/16
RECOMMENDED
DESIGN MANAGER 10/16
APPROVED:
CITY ENGINEER
FILE: DRAWING: E106
DATE: 11.11.16
ATLAS PAGE NO:
SHEET 48 OF 74 SHEETS
GH2 PROJECT #:

© 2016 COPYRIGHT GH2 ARCHITECTS, LLC

NOTES

1. EXTERIOR WALL PACKS ARE TO BE CONTROLLED BY ASTRONOMIC TIMER ALONG WITH EXTERIOR POLE LIGHTS. SEE SHEET E103 FOR DETAILS.
2. IN POOL EQUIPMENT ROOMS, MOUNT FIXTURE ON BOTTOM OF JOISTS AT 10'-6" ABOVE FINISHED FLOOR.
3. IN FAMILY CHANGING ROOM, MOUNT FIXTURE ON GYPBOARD CEILING AT 8'-4" ABOVE FINISHED FLOOR.
4. CONNECT EMERGENCY BATTERY PACKS AND EXIT LIGHT TO UNSWITCHED LEAD OF CIRCUIT.

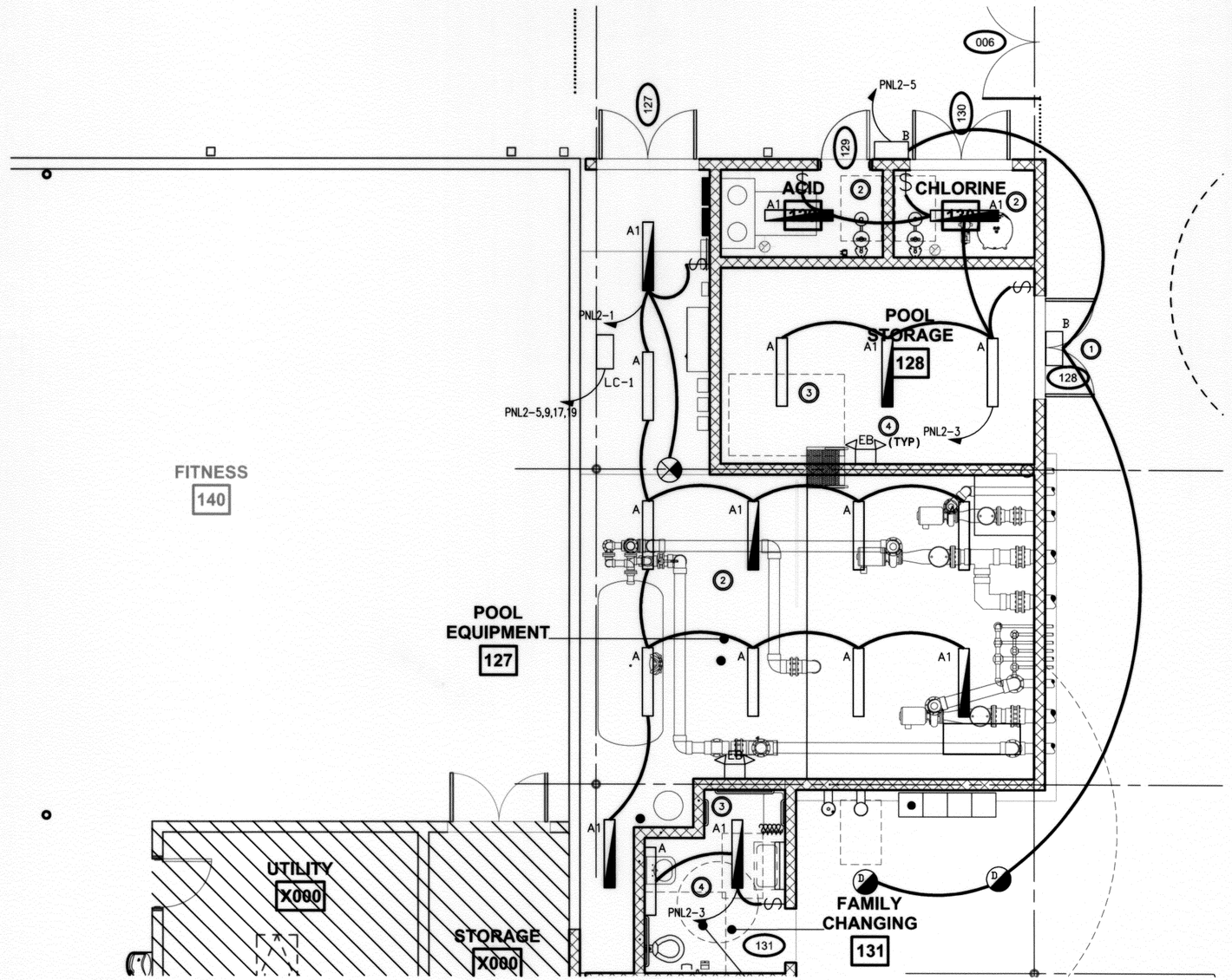

NEW LIGHTING PLAN
SCALE: 1/4" = 1'-0"

NORTH 0 1 2 4 8 FEET

REGISTERED PROFESSIONAL ENGINEER DEREK WAYNE GATES 16502 OKLAHOMA

10/24/2016

E107 NEW LIGHTING PLAN

PROJECT NO. 147400 CONTRACT # 147400

TULSA PARKS DEPARTMENT
LACY POOL RECONSTRUCTION

CITY OF TULSA, OKLAHOMA
ENGINEERING SERVICES DEPARTMENT

PLANS AND ESTIMATES PREPARED BY:
GH2 ARCHITECTS, LLC.

REVISION	BY	DATE

PLAN SCALE: AS NOTED
PROFILE SCALE: AS NOTED
HORIZONTAL: AS NOTED
VERTICAL AS NOTED

DRAWN	DWG	10/24/2016	APPROVED:
DESIGNED	DWG	10/24/2016	
SURVEY			
PROJ. MGR.	GRD	10/16	
LEAD ENGR.			
FIELD MGR.	REW	10/16	
RECOMMENDED: DESIGN MANAGER	MAS	10/16	CITY ENGINEER

FILE: DRAWING: E107 DATE: 11.11.16

ATLAS PAGE NO: SHEET 49 OF 74 SHEETS

GH2 PROJECT #:

© 2016 COPYRIGHT GH2 ARCHITECTS, LLC

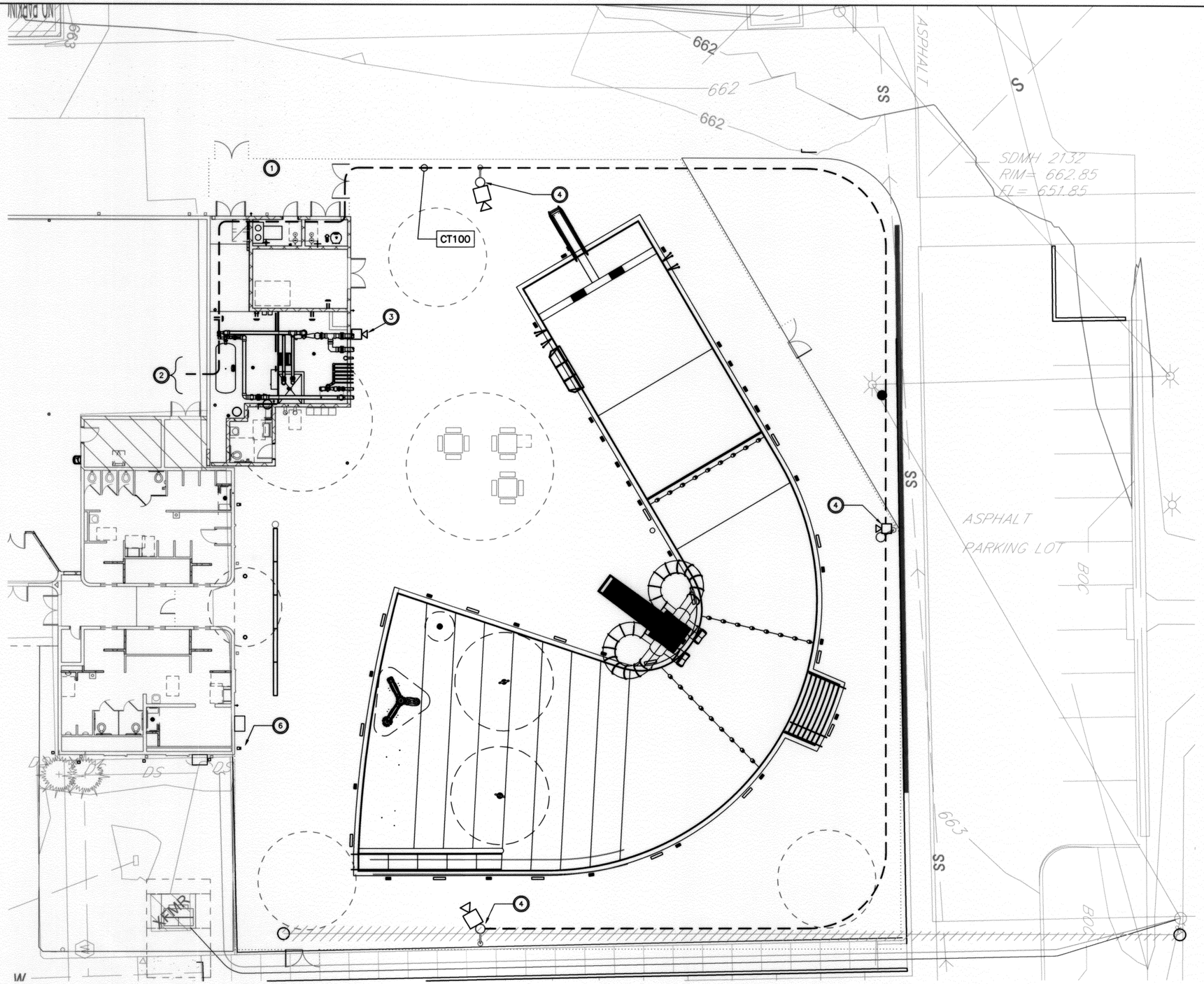

POOL CAMERA SECURITY
SCALE: 3/32" = 1'-0"

NORTH 0 2 4 8 16 FEET

NOTES

1. CONTRACTOR TO INSTALL RACEWAY AND JUNCTION BOXES FOR CAMERA WIRING. CONDUIT TO BE ¾" EMT MOUNTED NEAR CEILING. EXTERIOR CAMERA LOCATIONS TO MATCH EXISTING. OWNER WILL PULL WIRE FOR CAMERAS. PROVIDE PULL STRING IN EMPTY CONDUITS. CONDUITS TO BE INSIDE.
2. CONDUIT TO BE ROUTED TO AREA WITH LAY-IN CEILING.
3. CAMERA AND WIRING BY OWNER.
4. CAMERA TO BE INSTALLED ON POLE. CAMERA SIGNAL TO BE ROUTED TO BUILDING IN SEPARATE CONDUIT FROM POWER WIRING. INTERIOR CAMERA CONDUIT TO BE ¾" EMT. EXTERIOR CAMERA CONDUIT TO BE 1" PVC BURIED 24" BELOW GRADE. CAMERA CABLE AT THE POLE WILL BE ROUTED INSIDE THE POLE. INSTALL PULL STRING IN CAMERA CONDUITS.
5. LIGHT POLES TO CONTAIN AN INTERNAL RACEWAY FOR ROUTING LOW VOLTAGE CAMERA SIGNAL INSIDE POLE TO TOP OF POLE FOR CAMERA CONNECTION.
6. OWNER TO EXTEND WIRING FROM EXISTING CAMERAS TO NEW CAMERA CONTROLLER.

REGISTERED PROFESSIONAL ENGINEER
DEREK WAYNE GRACE
16502
OKLAHOMA

10/24/2016

E108 POOL CAMERA SECURITY

PROJECT NO. 147400 CONTRACT # 147400

TULSA PARKS DEPARTMENT
LACY POOL RECONSTRUCTION

CITY OF TULSA, OKLAHOMA
ENGINEERING SERVICES DEPARTMENT

PLANS AND ESTIMATES PREPARED BY:
GH2 ARCHITECTS, LLC.

REVISION	BY	DATE

PLAN SCALE: AS NOTED
PROFILE SCALE:
HORIZONTAL: AS NOTED
VERTICAL AS NOTED

DRAWN	DWG	10/24/2016
DESIGNED	DWG	10/24/2016
SURVEY		
PROJ. MGR.	GHD	10/16
LEAD ENGR.		
FIELD MGR.	RBV	10/16
RECOMMENDED: DESIGN MANAGER	HAS	10/16

APPROVED: CITY ENGINEER

FILE: DRAWING: E108 DATE: 11.11.16

ATLAS PAGE NO: SHEET 50 OF 74 SHEETS

GH2 PROJECT #:

© 2016 COPYRIGHT GH2 ARCHITECTS, LLC

PNL: MSP – EXISTING PHASE 1 | MANUFACTURER: | CAB: NEMA 3R, PAD MOUNT
SERVICE: 208/120V 3PH 4W | BUS: 1200A | FEED: BOTTOM
ISC RATING: 65,000 A.I.C.

SERVING	WIRE SIZE	AMPS	POLES	CIRC. NO.	PHASE LOADING AMPS A	PHASE LOADING AMPS B	PHASE LOADING AMPS C	CIRC. NO.	POLES	AMPS	WIRE SIZE	SERVING
MDP1 (OLD SERVICE PANEL)	(2) 300	400	3	1	300			2	3	60	10	SURGE SUPPRESSOR
				3		300		4				
				5			300	6				
MDP2 (EXPANSION PANEL)	(2) 600	600	3	7	371			8	3	225	4/Ø	GYM HVAC UNITS
				9		341		10				
				11			363	12				
			3	13	**213.0**			**14**	**3**	**400**	**600**	**POOL PANEL CIRCUIT BREAKER** (1)
				15		**194.6**		**16**				
				17			**220.2**	**18**				
			3	19				20	3			
				21				22				
				23				24				
TOTALS:					1065	1017	1064.5					

NOTES:

1. *CONNECT FEEDER TO 400A, 3P CIRCUIT BREAKER IN EXISTING PANEL MSP.*
2. *PROVIDE GFCI CIRCUIT BREAKER FOR EXTERIOR RECEPTACLES.*

PNL: PNL1–NEW | MANUFACTURER: SCHNEIDER ELECTRIC OR EQUAL | CAB: SURFACE
SERVICE: 208/120V 3PH 4W | BUS: 400A | FEED: TOP
ISC RATING: 42,000 A.I.C.

SERVING	WIRE SIZE	AMPS	POLES	CIRC. NO.	PHASE LOADING AMPS A	PHASE LOADING AMPS B	PHASE LOADING AMPS C	CIRC. NO.	POLES	AMPS	WIRE SIZE	SERVING
PANEL PNL2	#2	100	3	1	33.2	17		2	3	25	10	PUMP 2 – VFD2, 5HP
				3		22.3	17	4				
				5			27.2	17	6			
PUMP 1 – VFD1, 25HP	#2	100	3	7	75	0		8	3	20		SPARE
				9		75	0	10				
				11			75	0	12			
UV CONTROL PANEL	10	30	2	13	10			14	2			SPACE
				15		10		16				
EF–1	12	20	1	17			10.0	6.0	18	1	20	12	EF–3
EF–2	12	20	1	19	6.0	2.0			20	1	20	12	EF–4
SPACE			2	21					22	2			SPACE
				23				14.7	24			
SPACE			2	25		14.7			26	3	20	#12	WH–1
				27			14.7		28			
				29				14.7	30			
UH–1	12	20	3	31	13.9	13.9			32	3	20	12	UH–3
				33			13.9	13.9	34			
				35				13.9	13.9	36			
UH–2	12	20	3	37	13.9	13.9			38	3	20	12	UH–4
				39			13.9	13.9	40			
				41				13.9	13.9	42		
TOTALS:					213.5	194.6	220.2					

PNL: PNL2 – NEW | MANUFACTURER: SCHNEIDER ELECTRIC OR EQUAL | CAB: SURFACE
SERVICE: 208/120V 3PH 4W | BUS: 100A | FEED: TOP
ISC RATING: 42,000 A.I.C.

SERVING	WIRE SIZE	AMPS	POLES	CIRC. NO.	PHASE LOADING AMPS A	PHASE LOADING AMPS B	PHASE LOADING AMPS C	CIRC. NO.	POLES	AMPS	WIRE SIZE	SERVING
LIGHTS – POOL EQUIP. RM.	12	20	1	1	11.7	4.5		2	1	20	12	RECEPTACLES – POOL LIGHT POLES (2)
LIGHTS – POOL STORAGE RM.	12	20	1	3		5.3	9.0	4	1	20	12	RECEPTACLES – POOL EQUIP RM.
LIGHTS – WALL PACKS	12	20	1	5			2.7	7.5	6	1	20	12	RECEPTACLES – ACID & CHLORINE RMS.
LIGHTS – FAMILY CHANGING	12	20	1	7	2.0				8	1	20	12	RECEPTACLES – OUTSIDE
LIGHTING CONTROLLER LC–1	12	20	1	9					10	1	20	12	SPARE
SPARE	10	20	1	11					12	1	20	12	RECEPTACLES – CHECK–IN TABLE
SPACE	10	20	1	13					14	1			SPACE
SPACE	10	20	1	15			8.0		16	1	20	12	ACID SYSTEM
POLE LIGHTS – POOL VIA LC–1	10	20	2	17				10	4.0	18	1	20	12	WATER LEVEL CONTROLLER
				19	10	5.0				20	1	20	12	CHLORINE SYSTEM
SPACE			2	21						22	1			SPACE
				23					3.0	24	1	20	12	DHWP–1(REDIRC. PUMP)
SPACE			2	25		5.0				26	1	20	12	SUMP PUMP PANEL
				27						28	1			SPACE
SPACE			2	29						30	1			SPACE
				31						32	1			SPACE
SPACE			2	33						34	1			SPACE
				35						36	1			SPACE
SPACE			1	37						38	1			SPACE
SPACE				39						40	1			SPACE
SPACE				41						42	1			SPACE
TOTALS:					38.2	22.3	27.2						

PANEL SCHEDULES
SCALE: NONE

10/24/2016

REVISION	BY	DATE

E109 PANEL SCHEDULES
PROJECT NO. 147400 CONTRACT # 147400
TULSA PARKS DEPARTMENT
LACY POOL RECONSTRUCTION
CITY OF TULSA, OKLAHOMA
ENGINEERING SERVICES DEPARTMENT
PLANS AND ESTIMATES PREPARED BY:
GH2 ARCHITECTS, LLC.

PLAN SCALE: AS NOTED | PROFILE SCALE: | HORIZONTAL: AS NOTED | VERTICAL AS NOTED

DRAWN	DWG	10/24/2016	APPROVED:
DESIGNED	DWG	10/24/2016	
SURVEY			
PROJ. MGR.			
LEAD ENGR.			
FIELD MGR.	EBV	10/16	
RECOMMENDED:			
DESIGN MANAGER	MHS	10/16	CITY ENGINEER

FILE: | DRAWING: E109 | DATE: 11.11.16
ATLAS PAGE NO: | SHEET 51 OF 74 SHEETS
GH2 PROJECT #:

© 2016 COPYRIGHT GH2 ARCHITECTS, LLC

DEMOLITION NOTES:

1. CITY OF TULSA TO REMOVE DVR, CCTV MONITOR AND MODEM.
2. REMOVE ALL ELECTRICAL CIRCUITS AND PHONE LINES FEEDING EQUIPMENT IN EXISTING OFFICE, LOCATED ON WALLS AND COUNTERS THAT ARE TO BE DEMOLISHED.
3. ON SOUTH WALL OF THE OFFICE, REMOVE ALL SURFACE MOUNTED RECEPTACLE BOXES. FLUSH MOUNTED RECEPTACLES IN BLOCK WALL CAN REMAIN.
4. CONTRACTOR TO MAKE SURE THERE ARE NO OPEN CIRCUITS THAT FED RECEPTACLES THAT HAVE BEEN REMOVED.
5. LIGHTS IN OFFICE AREA ARE TO BE REMOVED AND RE-INSTALLED AS SHOWN ON REFLECTED LIGHTING PLAN, SHEET A113.

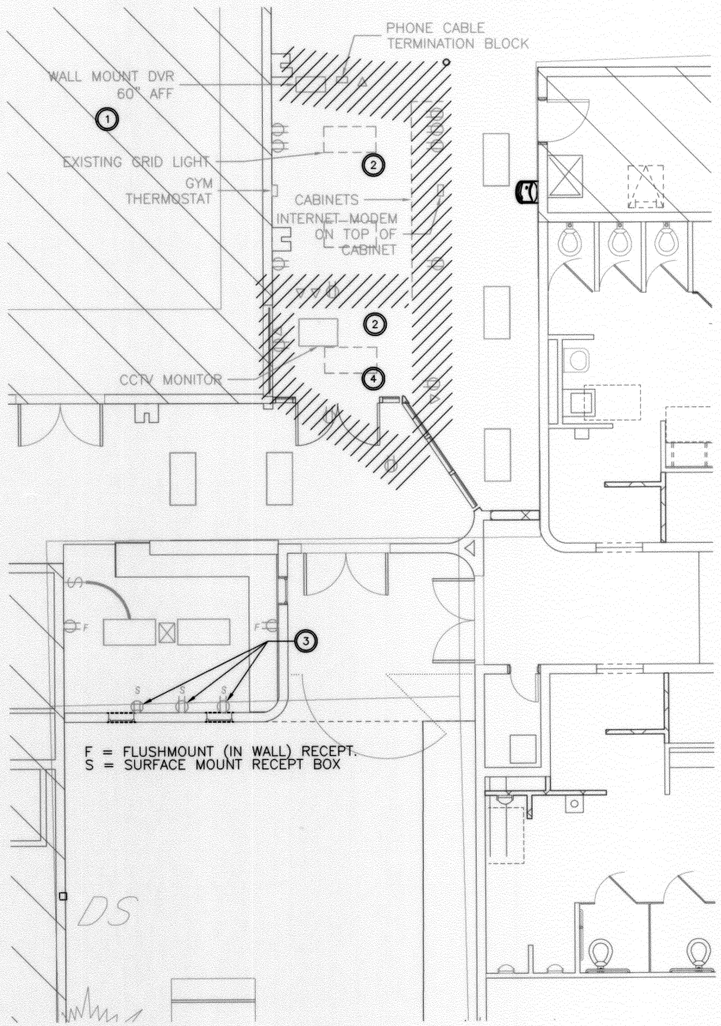

EXISTING PLAN GYM & OFFICE AREA

SCALE: 3/16" = 1'-0"

NORTH 0 4 8 16 32 FEET

NEW CONSTRUCTION NOTES:

1. FEED NEW RECEPTACLES UNDER THE COUNTER FROM CIRCUITS FEEDING EXISTING FLUSH MOUNT CIRCUIT LABELED "F". PANEL C IS LOCATED IN EXISTING MECHANICAL ROOM.
2. RE-FEED RELOCATED LIGHTS FROM EXISTING LIGHT CIRCUITS FOR AREA.
3. CAP BOXES WHERE OLD RECEPTACLES AND PHONE JACKS WERE LOCATED.

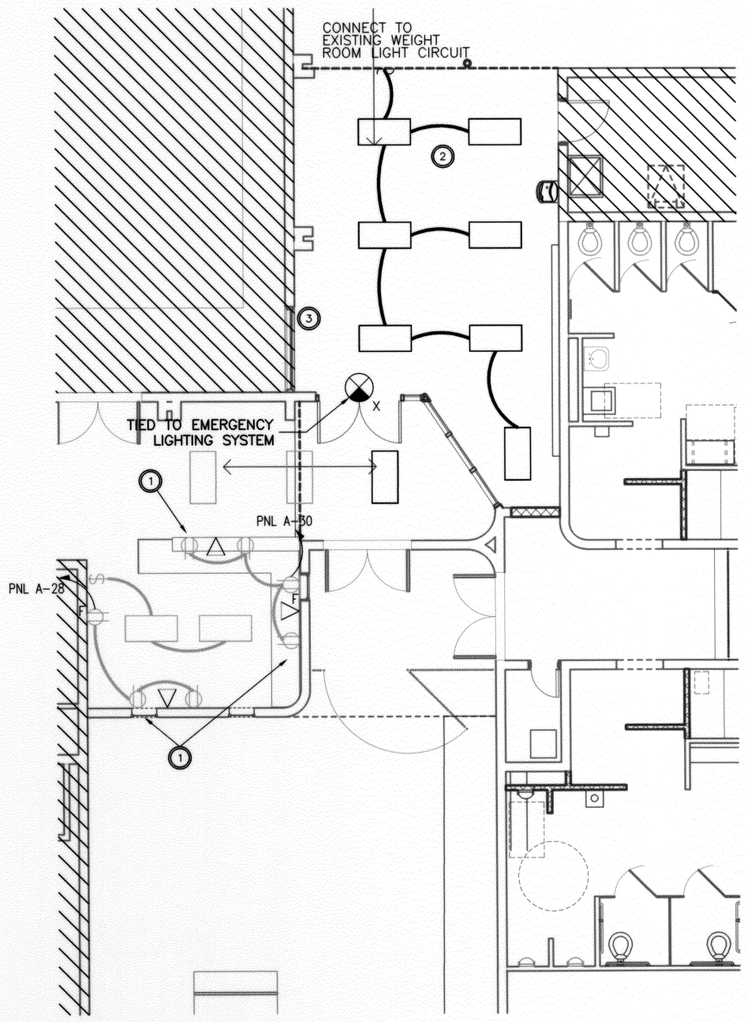

NEW PLAN WEIGHT ROOM & OFFICE AREA

SCALE: 3/16" = 1'-0"

NORTH 0 4 8 16 32 FEET

10/24/2016

REVISION	BY	DATE

E110 WEIGHT ROOM / OFFICE RENOVATIONS

PROJECT NO. 147400 CONTRACT # 147400

TULSA PARKS DEPARTMENT

LACY POOL RECONSTRUCTION

CITY OF TULSA, OKLAHOMA

ENGINEERING SERVICES DEPARTMENT

PLANS AND ESTIMATES PREPARED BY:

GH2 ARCHITECTS, LLC.

PLAN SCALE: AS NOTED	DRAWN	DWG 02/15/2016	APPROVED:
	DESIGNED	DWG 02/15/2016	
	SURVEY		
PROFILE SCALE:	PROJ. MGR.	EGO 10/16	
HORIZONTAL: AS NOTED	LEAD ENGR.		
	FIELD MGR.	RBV 10/16	
VERTICAL AS NOTED	RECOMMENDED: DESIGN MANAGER	HAS 10/16	CITY ENGINEER
FILE:	DRAWING: E110		DATE: 11.9.16
ATLAS PAGE NO:			SHEET 52 OF 74 SHEETS
GH2 PROJECT #:			

© 2016 COPYRIGHT GH2 ARCHITECTS, LLC

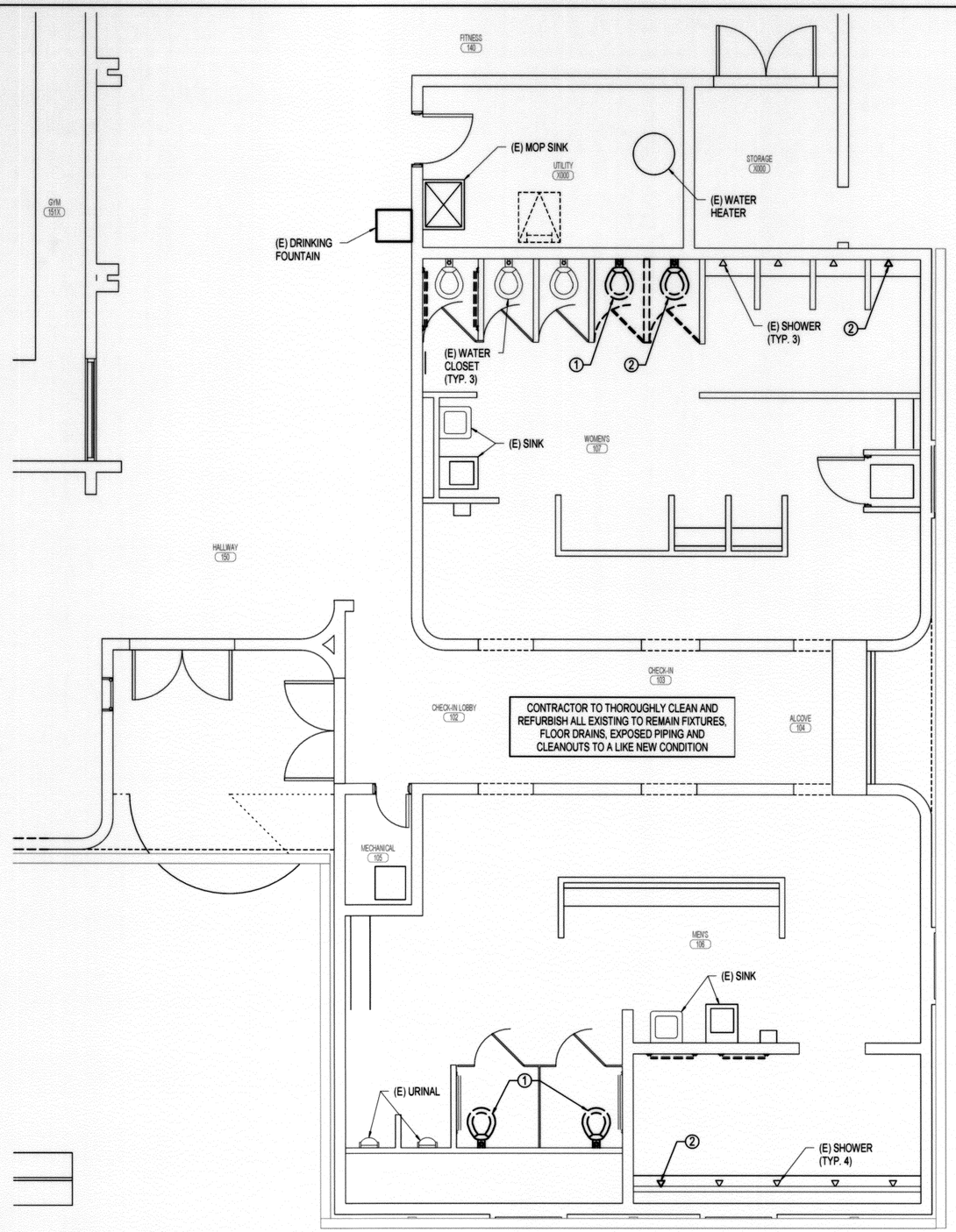

A PLUMBING DEMOLITION PLAN

1/4" = 1'-0"

NORTH 0' 1' 2' 4' 8 FEET

GENERAL NOTES

1. PLANS ARE SCHEMATIC IN NATURE. LAYOUT IS BASED ON BEST AVAILABLE INFORMATION. CONTRACTOR SHALL VERIFY EXISTING CONDITIONS AND DIMENSIONS.
2. VERIFY ALL EXIST CONDITIONS PRIOR TO BEGINNING WORK. BRING ANY DISCREPANCIES FROM THE DRAWINGS AND NOTES TO THE ATTENTION OF THE ARCHITECT IMMEDIATELY.
3. THE CONTRACTOR IS TO PATCH HOLES THAT ARE LEFT IN THE WALLS/FLOOR OR CEILING / ROOF AFTER REMOVAL OF EXIST EQUIPMENT OR FIXTURES. ALL PATCHING SHALL BE FINISHED TO MATCH THE EXIST SURROUNDINGS FINISHES OR AS OTHERWISE DIRECTED BY THE ARCHITECT.
4. ALL ACCESSIBLE ABANDONED PIPING, DUCTWORK OR EQUIPMENT SHALL BE REMOVED AND PROPERLY DISPOSED OF.
5. CONTRACTOR TO THOROUGHLY CLEAN AND REFURBISH ALL EXISTING TO REMAIN FIXTURES, FLOOR DRAINS, EXPOSED PIPING AND CLEANOUTS TO A LIKE NEW CONDITION.

PLAN NOTES

1. REMOVE EXIST WATER CLOSET COMPLETE. REMOVE WASTE AND CARRIER AND CAP SANITARY LINE. REMOVE ALL WATER AND VENT PIPING BACK TO MAIN AND CAP. REPAIR, PATCH AND FINISH THE FLOOR OR WALL TO FINISH QUALITY OF ADJACENT FLOOR OR WALL SURFACE. REFER TO ARCH DRAWINGS FOR FINISH TYPES AND COLORS.
2. DEMO EXISTING FIXTURE. MODIFY AND PREPARE EXISTING WASTE, VENT, CW AND HW PIPING FOR RECONNECTION OF NEW FIXTURE. FOR ADA COMPLIANCE, REFER TO ARCHITECTURAL DRAWINGS FOR EXACT LOCATIONS. REPAIR, PATCH AND FINISH THE FLOOR OR WALL TO FINISH QUALITY OF ADJACENT FLOOR OR WALL SURFACE. REFER TO ARCH DRAWINGS FOR FINISH TYPES AND COLORS.

PEC
PROFESSIONAL ENGINEERING CONSULTANTS, P.A.
4150 S. 100TH EAST AVE., SUITE 401
CHEROKEE BLDG. TULSA, OK 74146
918-664-5400 www.pec1.com

REVISION	BY	DATE

GH2 ARCHITECTS

P100 PLUMBING DEMO PLAN

PROJECT NO. 147400 CONTRACT # 147400

TULSA PARKS DEPARTMENT
LACY POOL RECONSTRUCTION

CITY OF TULSA, OKLAHOMA
ENGINEERING SERVICES DEPARTMENT

PLANS AND ESTIMATES PREPARED BY:
GH2 ARCHITECTS, LLC.

PLAN SCALE: 1/4" = 1'-0"	DRAWN	AJD	10/24/2016
	DESIGNED	AJD	10/24/2016
	SURVEY		
PROFILE SCALE:	PROJ. MGR.		10/16
HORIZONTAL: N/A	LEAD ENGR.		
	FIELD MGR.	RBM	10/16
VERTICAL N/A	RECOMMENDED: DESIGN MANAGER	HRS	10/16
	FILE: DRAWING:P100		
	ATLAS PAGE NO: 116		

APPROVED:

CITY ENGINEER

DATE: 11.11.16

SHEET 53 OF 74 SHEETS

10/24/2016 1:03:59 PM

© 2016 COPYRIGHT GH2 ARCHITECTS, LLC

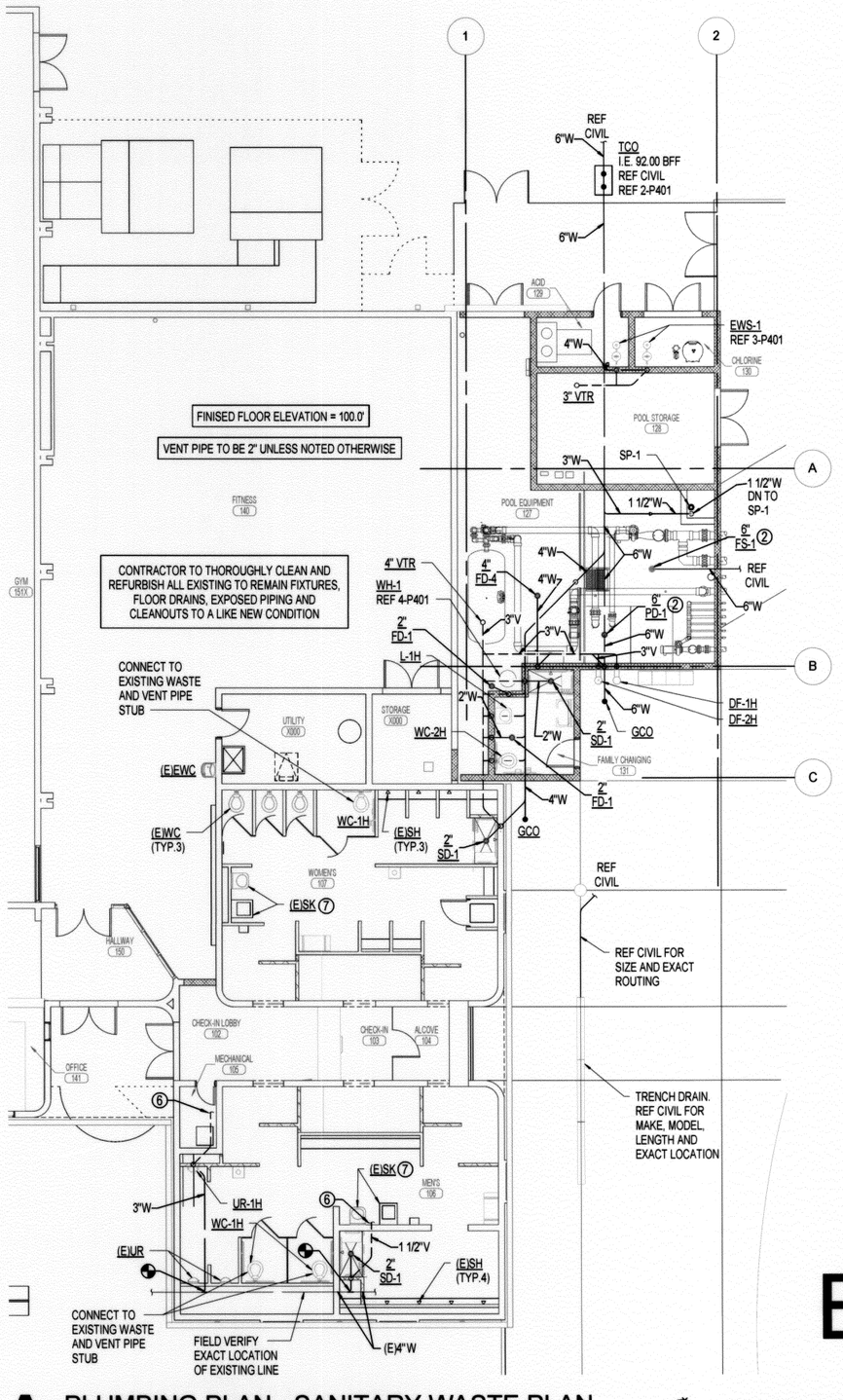

A PLUMBING PLAN - SANITARY WASTE PLAN

1/8" = 1'-0"

NORTH 0' 2' 4' 8' 16 FEET

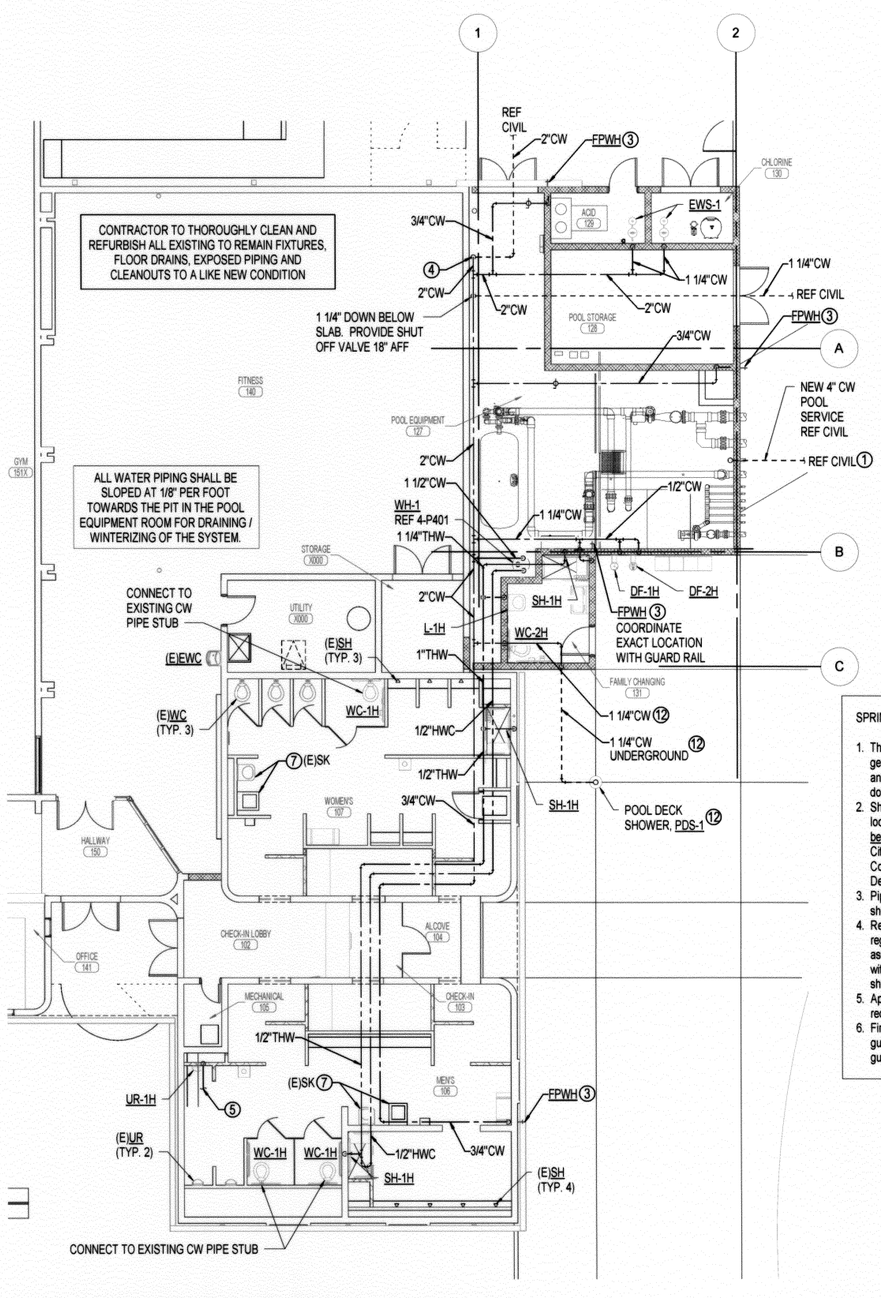

B PLUMBING PLAN - DOMESTIC WATER PLAN

1/8" = 1'-0"

NORTH 0' 2' 4' 8' 16 FEET

GENERAL NOTES

1. PROVIDE TRAP GUARD PRIMERS FOR ALL FLOOR DRAINS. REF 1-P401.
2. ALL WASTE AND VENT PIPING SHALL BE ROUTED INSIDE BLOCK WALLS WHERE POSSIBLE. WHERE EXPOSED, RUN VENT PIPE AS HIGH AS POSSIBLE.
3. AT ALL PENETRATIONS THRU STRUCTURAL FOOTINGS, PROVIDE A PVC SLEEVE THRU THE FOOTING A MINIMUM OF ONE PIPE SIZE LARGER THAN THE PENETRATING PIPE. REFER TO STRUCTURAL PLANS FOR FOOTING LOCATIONS.
4. ALL DEVICES, SHOWN TO BE INSTALLED IN A C.M.U. WALL, SHALL BE CENTERED VERTICALLY IN ONE OF THE HORIZONTAL HALVES OF THE C.M.U. (CENTER DEVICE 4" VERTICALLY AND 4" HORIZONTALLY FROM EITHER END OF THE C.M.U.). ALL DEVICES IN ONE ROOM SHALL BE INSTALLED AT THE SAME HEIGHT. MAXIMUM MOUNTING HEIGHT OF WALL CLEANOUTS SHALL BE 18", MINIMUM MOUNTING HEIGHT SHALL BE 14".
5. PROVIDE WATER HAMMER ARRESTORS ON COLD WATER BRANCH PIPING PER INDUSTRY STANDARDS TO PREVENT OCCURRENCE OF WATER HAMMER. WATER HAMMER ARRESTORS TO BE EQUAL TO WATTS MODEL 15M2.
6. EXTEND ALL UTILITY LINES TO A LINE 5 FEET OUTSIDE OF THE STRUCTURAL FOOTPRINT OF THE BUILDING AND CONNECT TO SITE UTILITY LINES. REF CIVIL.

PLAN NOTES ⓧ

1. ROUTE MAKE-UP / POOL SERVICE WATER TO POOL FILL FUNNEL. REFER TO POOL PLANS.
2. PROVIDE AND INSTALL A LINK-SEAL MODULAR SEAL AT PENETRATION THRU SLAB OR WALL.
3. MOUNT AT 18" ABOVE FINISHED FLOOR OR FINISHED GRADE. PROVIDE BALL SHUT-OFF VALVE IN PIPING RUNOUT TO FREEZE PROOF WALL HYDRANT (FPWH).
4. 2" DOMESTIC WATER SERVICE. PROVIDE MAIN SHUT-OFF AT 18" AFF. PROVIDE 1" BALL DRAIN VALVE IMMEDIATELY ABOVE MAIN SERVICE SHUT-OFF VALVE.
5. CONNECT TO NEAREST (E)2"CW OR LARGER DOMESTIC WATER LINE.
6. CONNECT TO NEAREST (E)2"V OR LARGER VENT PIPE.
7. PROVIDE ADA COMPLIANT PIPE WRAP UNDER EXISTING SINKS SIMILAR TO TRUBRO LAV GUARD 2 MODEL #103 E-Z.
8. FIRE PROTECTION TO SERVE NEW BUILDING AND ASSOCIATED CANOPIES.
9. CONTRACTOR TO LOCATE HEADS AND TYPE OF HEADS REQUIRED IN COORDINATION WITH REFLECTED CEILING PLAN IN NEW BUILDING. COORDINATE PIPE INSTALLATION AND ROUTING WITH WORK OF ALL OTHER TRADES.
10. PROVIDE EXTERIOR CANOPY FIRE PROTECTION FOR THE NEW BUILDING MEETING NFPA 13 REQUIREMENTS. REFER TO NEW ARCHITECTURAL PLANS FOR NEW BUILDING CANOPY CONDITIONS.
11. DRY PIPE FIRE PROTECTION SYSTEM TO SERVE ALL PORTIONS OF NEW AND EXISTING BUILDING SUBJECT TO FREEZING MEETING NFPA 13 REQUIREMENTS.
12. ADD ALTERNATE A4.

SPRINKLER SYSTEM SCOPE OF WORK

1. The work shall include, but is not necessarily limited to the Sprinkler Systems and any appurtenances common to the systems, generally consisting of pipe, fittings, valves, hangers, covering, painting, cleaning, testing and such other work as is necessary and specified or shown on the drawings. All areas are to be classed "ordinary hazard" unless otherwise noted. Work shall be done by Licensed Sprinkler Contractor.
2. Shop Drawings: This Contractor shall submit complete sprinkler system working plans showing sprinkler head locations, all piping locations and sizes, valves, alarms, fire department connections etc., as set forth in National Fire Code 13. Shop drawings shall be sealed by a Licensed Fire Protection Engineer in the State that the project is located. Shop drawings shall be submitted to the City Code Enforcement Authority and the Local Fire Department. After review by the Local Code Enforcement Authority, the Contractor will make any changes and/or additions to the plan and system which the City Code Enforcement Authority or Fire Department deem necessary. Submit final approved plans to Owners Representative.
3. Piping systems shall be hydraulically designed per NFPA-I3. Calculations for hydraulic designed system shall be submitted with shop drawings.
4. Regulations and Permits: All work under this section of the specifications shall comply with all laws, ordinances, rules and regulations of the local authorities having jurisdiction and fire protection layout according to NFPA, Pamphlet #I3 and the associated Factory Mutual's approval and shall be subject to the inspection and approval of the authorities having jurisdiction not withstanding anything in this specification to the contrary. The Contractor for the work, under this Division of the specifications, shall obtain and pay for all permits required to initiate and complete the work under this contract.
5. Approval: The sprinkler system shop drawings shall be approved by the Local Fire Department and the insuring agency, or as required by the insuring agency before work shall begin on any part of the systems.
6. Fire Protection Equipment Guaranteed: All equipment and components furnished under the project specifications shall be guaranteed for a period of one (1) year from the date of acceptance. Failures of any part of the guaranteed equipment during the guarantee period shall be promptly replaced with new parts by and at the expense of the Contractor.

GH2 ARCHITECTS

P101 PLUMBING FLOOR PLAN

PROJECT NO. 147400 CONTRACT # 147400

TULSA PARKS DEPARTMENT
LACY POOL RECONSTRUCTION

CITY OF TULSA, OKLAHOMA
ENGINEERING SERVICES DEPARTMENT

PLANS AND ESTIMATES PREPARED BY:
GH2 ARCHITECTS, LLC.

REVISION	BY	DATE

PLAN SCALE: 1/8" = 1'-0"	DRAWN	AJD	10/24/2016
	DESIGNED	AJD	10/24/2016
	SURVEY		
PROFILE SCALE:	PROJ. MGR.		
HORIZONTAL: N/A	LEAD ENGR.		
	FIELD MGR.		
VERTICAL N/A	RECOMMENDED DESIGN MANAGER		

APPROVED:

CITY ENGINEER

FILE: DRAWING:P101 DATE: 11.11.16

ATLAS PAGE NO: 116 SHEET 54 OF 74 SHEETS

PEC
PROFESSIONAL ENGINEERING CONSULTANTS, P.A.
4150 S. 100TH EAST AVE., SUITE 401
CHEROKEE BLDG. TULSA, OK 74146
918-664-5400 www.pec1.com

10/24/2016 1:04:13 PM

© 2016 COPYRIGHT GH2 ARCHITECTS, LLC

PLUMBING FIXTURE SCHEDULE

PLAN MARK	FIXTURE	WATER				WASTE		VENT	REMARKS
		COLD		HOT					
		RUNOUT	CONN.	RUNOUT	CONN.	RUNOUT	CONN.		
WC-1	WATER CLOSET (FV)	1 1/4"	1"	---	---	4"	3"	2"	
WC-1H	WATER CLOSET (FV)	1 1/4"	1"	---	---	4"	3"	2"	ADA COMPLIANT
WC-2H	WATER CLOSET (FV)	1 1/4"	1"	---	---	4"	3"	2"	ADA COMPLIANT
UR-1H	URINAL	1"	3/4"	---	---	3"	2"	2"	ADA COMPLIANT
L-1H	LAVATORY	---	---	1/2"	3/8"	2"	1 1/4"	1 1/2"	ADA COMPLIANT
DF-1H	DRINKING FOUNTAIN	1/2"	3/8"	---	---	2"	1 1/4"	1 1/2"	ADA COMPLIANT
DF-2H	DRINKING FOUNTAIN	1/2"	3/8"	---	---	2"	1 1/4"	1 1/2"	ADA COMPLIANT
FPWH	FREEZE PROOF WALL HYDRANT	3/4"	3/4"	---	---	---	---	---	
PD-1	PIT DRAIN	---	---	---	---	6"	6"	3"	
PDHB	POOL DECK YARD HYDRANT	3/4"	3/4"	---	---	---	---	---	
EWS-1	EYE WASH / SHOWER STATION	---	---	1 1/2"	1 1/4"	2"	1 1/2"	1 1/2"	
SH-1H	SHOWER	---	---	3/4"	1/2"	---	---	---	ADA COMPLIANT
SD-1	SHOWER DRAIN	---	---	---	---	3"	3"	1 1/2"	
FD-1	FLOOR DRAIN	---	---	---	---	VARIES	VARIES	1 1/2"	
PDS-1	POOL DECK SHOWER	1 1/2"	1 1/2"	---	---	---	---	---	ADD ALTERNATE
FS-1	FLOOR SINK	---	---	---	---	VARIES	VARIES	1 1/2"	

WC-1: WATER CLOSET:
WATER CLOSET: KOHLER K-4330 "KINGSTON" VITREOUS CHINA WALL HUNG FLUSH VALVE ELONGATED WATER CLOSET, SIPHON JET, 1-1/2" TOP SPUD, 1.6 GALLON FLUSH, SLOAN ROYAL 113 FLUSH VALVE, WHITE SOLID PLASTIC OPEN FRONT SEAT LESS COVER WITH SELF SUSTAINING CHECK HINGE, ZURN FLOOR SUPPORTED CARRIER.

WC-1H: WATER CLOSET (ACCESSIBLE):
WATER CLOSET: KOHLER K-4330 "KINGSTON" VITREOUS CHINA WALL HUNG ELONGATED FLUSH VALVE WATER CLOSET, SIPHON JET, 1-1/2" TOP SPUD, 1.6 GALLON FLUSH, SLOAN ROYAL 113 FLUSH VALVE, WHITE SOLID PLASTIC OPEN FRONT SEAT LESS COVER WITH SELF SUSTAINING CHECK HINGE, ZURN FLOOR SUPPORTED CARRIER. UNIT SHALL BE ADA COMPLIANT.

WC-2H: WATER CLOSET (ACCESSIBLE):
ZURN Z5647-BWL, HET CONCEALED, ELONGATED, ADA HEIGHT, FLOOR MOUNTED, BACK OUTLET, FLUSH VALVE TOILET WITH REAR SPUD, 1.6 GALLON FLUSH, SLOAN OPTIMA FLUSH VALVE 152-1.6 ES-S TMO SWB, BEMIS 1955-SSCT WHITE SOLID PLASTIC ELONGATED OPEN FRONT SEAT WITH STAINLESS STEEL CHECK HINGE, OPEN FRONT LESS COVER. UNIT SHALL BE ADA COMPLIANT.

UR-1H: URINAL (ACCESSIBLE):
KOHLER MODEL K-44920-R "BRANHAM" WASHOUT URINAL, 3/4" REAR SPUD, 1.0 GALLON FLUSH, SLOAN OPTIMA 195-1.0 WB ES-S FLUSH VALVE WITH VACUUM BREAKER. UNIT SHALL BE ADA COMPLIANT.

L-1: LAVATORY:
KOHLER K-2031 "GREENWICH" 21"X18" WALL HUNG VITREOUS CHINA, LAVATORY WITH FRONT OVERFLOW, SINGLE FAUCET HOLE, DRILLED FOR CONCEALED ARM CARRIER. ZURN SINGLE BASIN METERING MODEL Z86100-XL, POLISHED CHROME-PLATED, VANDAL RESISTANT, 1.0 GPM, INTEGRAL SHANK FILTER. 1-1/4" CHROME PLATED CAST BRASS "P" TRAP, WADE W520 CONCEALED ARM CARRIER, INSULATE "P" TRAP AND WATER SUPPLY WITH TRU-BRO MODEL 103 E-Z.

L-1H: LAVATORY (ACCESSIBLE):
KOHLER K-2031 "GREENWICH" 21"X18" WALL HUNG VITREOUS CHINA, LAVATORY WITH FRONT OVERFLOW, SINGLE FAUCET HOLE, DRILLED FOR CONCEALED ARM CARRIER. ZURN SINGLE BASIN METERING MODEL Z86100-XL, POLISHED CHROME-PLATED, VANDAL RESISTANT, 1.0 GPM, INTEGRAL SHANK FILTER. 1-1/4" CHROME PLATED CAST BRASS "P" TRAP, WADE W520 CONCEALED ARM CARRIER, INSULATE "P" TRAP AND WATER SUPPLY WITH TRU-BRO MODEL 102 & 105.
UNIT SHALL BE ADA COMPLIANT.

DF-1H: DRINKING FOUNTAIN:
TUBULAR WALL MOUNT BARRIER-FREE FOUNTAIN (ACCESSIBLE): ELKAY LK4405FRK, E-COAT IMMERSION, STAINLESS STEEL BASIN, CERTIFIED NSF/ANSI 61 AND 372, LEAD FREE DESIGN, FRONT PUSH BUTTON OPERATION, FREEZE-RESISTANT VALVE SYSTEM, VANDAL-RESISTANT BUBBLER, INLINE STRAINER, FREEZE-RESISTANT DRAIN OUTLET LOCATED IN VALVE SYSTEM. MOUNT AT ADA ACCESSIBLE HEIGHT.

DF-2H: DRINKING FOUNTAIN / BOTTLE FILLER
WALL-MOUNT OUTDOOR TUBULAR FREEZE-RESISTANT, BOTTLE FILLING STATION (ACCESSIBLE): ELKAY LK4405BFFRK, E-COAT IMMERSION, LEAD FREE DESIGN, CERTIFIED NSF/ANSI 61 AND 372, FREEZE - RESISTANT VALVE SYSTEM, BOTTLE FILLER RATE AT 1 GPM, PUSHBUTTON ACTUATION. MOUNT AT ADA COMPLIANT MOUNTING HEIGHT.

FPWH: FREEZE PROOF WALL HYDRANT:
WOODFORD MODEL B65, HOSE CONNECTION ANTI-SIPHON VACUUM BREAKS, FREEZE-LESS WALL HYDRANT, REMOVABLE KEY, CHROME PLATED TRIM AND DOOR.

PD-1: PIT DRAIN:
ZURN MODEL Z1736 12 INCH DIAMETER EXTRA HEAVY-DUTY FLOOR DRAIN. 304 STAINLESS STEEL BODY W/ ANCHOR FLANGE, SEDIMENT BUCKET, PROVIDE LINK-SEAL MODULAR SEAL AT PENETRATION THRU PIT WALL.

PDHB: POOLD DECK YARD HYDRANT:
WOODFORD MODEL Y95, INSTALLED ON FINISHED SURFACE FLUSH WITH SURROUNDING GRADE, TAMPER PROOF, MODEL 50HF BRASS VACUUM BREAKER. REF CIVIL FOR LOCATIONS.

EWS-1: EYE WASH / SHOWER STATION:
HAWS 8336, 2 1/2" EPOXY FINISH, SCH 80 PVC PIPE, PRESSURE TESTED, TYPE 316 STAINLESS , PULL LEVER OR PUSH OPERATION, AXION MSR ABS SHOWERHEAD, PROVIDE MODEL 9201E AXION ETMV SET AT 80° FAHRENHEIT.

SH-1H: HAND SHOWER SYSTEM:
BRADLEY 1C-TT-SB-RSD: BUILT-IN SHOWER WITH CONCEALED SUPPLIES, 1 MINUTE TOUCHTIME METERING VALVE, 60" FLEXIBLE HOSE, 24" METAL SLIDE BAR, VACUUM BREAKER AND QUICK DISCONNECT, RECESSED SOAP DISH. CONTRACTOR TO PROVIDE AND INSTALL ADA COMPLIANT GRAB BAR.

SD-1: SHOWER DRAIN:
ZURN ZN-415-6B-Y. 6" STRAINER WITH DEEP SEAL CAST IRON TRAP, ADJUSTABLE TOP, SEDIMENT BUCKET.

FD-1: FLOOR DRAIN:
WADE 1000-R - ADJUSTABLE FLOOR DRAIN WITH TRAP GUARD.

PDS-1: POOL DECK SHOWER:
MURDOCK-SUPER SECUR BEACH SHOWER W/ FOUR STATIONS, VANDAL RESISTANT SPRAY HEADS. FOUR TIMER CONTROLLED WATER CONTROL VALVES, COLOR BY ARCH. ADD ALTERNATE A4.

FS-1: FLOOR SINK:
WATTS FS-790 - TYPE 304 STAINLESS STEEL SANITARY FLOOR SINK, LOOSE SET CAST STAINLESS STEEL GRATE, DOME BOTTOM STRAINER AND NO HUB OUTLET.

WATER HEATER SCHEDULE

MARK	LOC AT ROOM	TYPE	MIN CAPACITY		INPUT (KW)	ELECTRIC V/PH/HZ	REMARKS	RECIRC PUMP
			SIZE (GAL)	GPH RECOVERY @ 100°F RISE				
WH-1	128	TANK	30	36	4.5 / 4.5	208/3/60	①②③	DHWP-1

REMARKS:

① BASED ON A.O. SMITH WATER HEATER MODEL DEL-30. SIMULTANEOUS OPERATION, GLASS LINED TANK, ZINC PLATED COPPER SHEATHS ON ELEMENTS,FACTORY INSTALLED TERMINAL BLOCK, ASME RATED T&P RELIEF, ANODE ROD, TOP INLET AND OUTLET, MEETS STANDBY LOSS REQUIREMENTS OF ASHRAE 90.1
② EXPANSION TANK: AMTROL ST-5-C, 2.0 GALLON TANK VOLUME. INSTALL PER MANUFACTURER'S RECOMMENDATIONS.
③ INSTALL PER MANUFACTURER'S RECOMMENDATIONS AND REQUIREMENTS.

PUMP SCHEDULE

MARK	LOC AT ROOM	TYPE	MIN CAPACITY			MIN SIZE CONN.		MOTOR (BY M.C.)				REMARKS
			GPM	FEET HEAD	EFF	SUCTION	DISCH	HP	RPM	SPEED	ELECT (V/PH)	
DHWP-1	MECH	CIRC.	6	1	--	3/4"	3/4"	1/12	1725	1	120/1	①②

REMARKS:

① BASED ON TACO MODEL 110 ALL BRONZE INLINE CIRCULATOR PUMP.
② INSTALL PER MANUFACTURER'S INSTRUCTIONS AND RECOMMENDATIONS.

THERMOSTATIC MIXING VALVE SCHEDULE

MARK	LOC AT ROOM	GPM		PRESS. DROP	CW		HW		MIXED		OUTLET TEMP	REMARKS
		MIN.	MAX		RUNOUT	CONN.	RUNOUT	CONN.	RUNOUT	CONN.		
TMV-1	127	0.5	38	10	1 1/2"	1"	1 1/2"	1"	1 1/2"	1 1/4"	100 °F	①②

REMARKS:

① BASED ON BRADLEY S59-3080 THERMOSTATIC MIXING VALVE. PROVIDE OPTIONAL WALL MOUNTING BRCKET.
② INSTALL PER MANUFACTURER'S INSTRUCTIONS AND RECOMMENDATIONS.

SUMP PUMP SCHEDULE

MARK	LOC AT ROOM	BASIN		PUMP						REMARKS
		SIZE	INLET	G.P.M.	STARTING CURRENT	RATED CURRENT	R.P.M.	HEAD	ELEC (V/PH)	
SP-1	127	--	--	25	14.5 A	4.9 A	--	10'	120/1	①②

REMARKS:

① BASED ON GRUNDFOS UNILIFT KP 250 A 1.
② INSTALL PER MANUFACTURER'S RECOMMENDATIONS AND INSTRUCTIONS AND ALL LOCAL CODES.

PEC
PROFESSIONAL ENGINEERING CONSULTANTS, P.A.
4150 S. 100TH EAST AVE., SUITE 401
CHEROKEE BLDG. TULSA, OK 74146
918-664-5400 www.pec1.com

GH2 ARCHITECTS

P301 PLUMBING SCHEDULES

PROJECT NO. 147400 CONTRACT # 147400

TULSA PARKS DEPARTMENT
LACY POOL RECONSTRUCTION

CITY OF TULSA, OKLAHOMA
ENGINEERING SERVICES DEPARTMENT

PLANS AND ESTIMATES PREPARED BY:
GH2 ARCHITECTS, LLC.

REVISION	BY	DATE

PLAN SCALE: N/A
PROFILE SCALE:
HORIZONTAL: N/A
VERTICAL N/A

DRAWN	AJD	10/24/2016
DESIGNED	AJD	10/24/2016
SURVEY		
PROJ. MGR.		
LEAD ENGR.		
FIELD MGR.		
RECOMMENDED: DESIGN MANAGER		

APPROVED: CITY ENGINEER

FILE: DRAWING: P301
DATE: 11.11.16
ATLAS PAGE NO: 116
SHEET 55 OF 74 SHEETS

2134 N. MADISON PLACE, TULSA, OK

GH2 PROJECT #:20140022.01

© 2016 COPYRIGHT GH2 ARCHITECTS, LLC

10/24/2016 1:04:13 PM

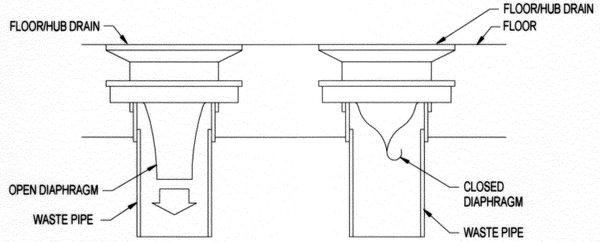

NOTES:

1. TRAP GUARD DIAPHRAGM AS MANUFACTURED BY PROSET SYSTEMS, INC. SEE SPECIFICATION
2. WHERE ALLOWED BY LOCAL CODE, TRAP GUARD MAY BE USED IN LIEU OF TRAP PRIMER.
3. TYPICAL ALL FLOOR DRAINS.

1 TRAP GUARD DETAIL

SCALE: NONE

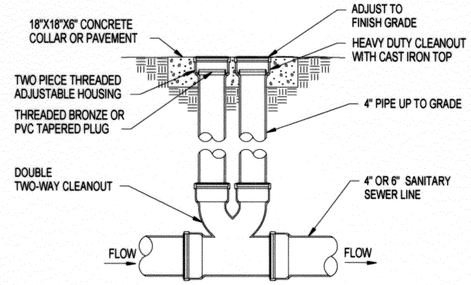

2 CLEANOUT DETAIL - TWO-WAY EXTERIOR

SCALE: NONE

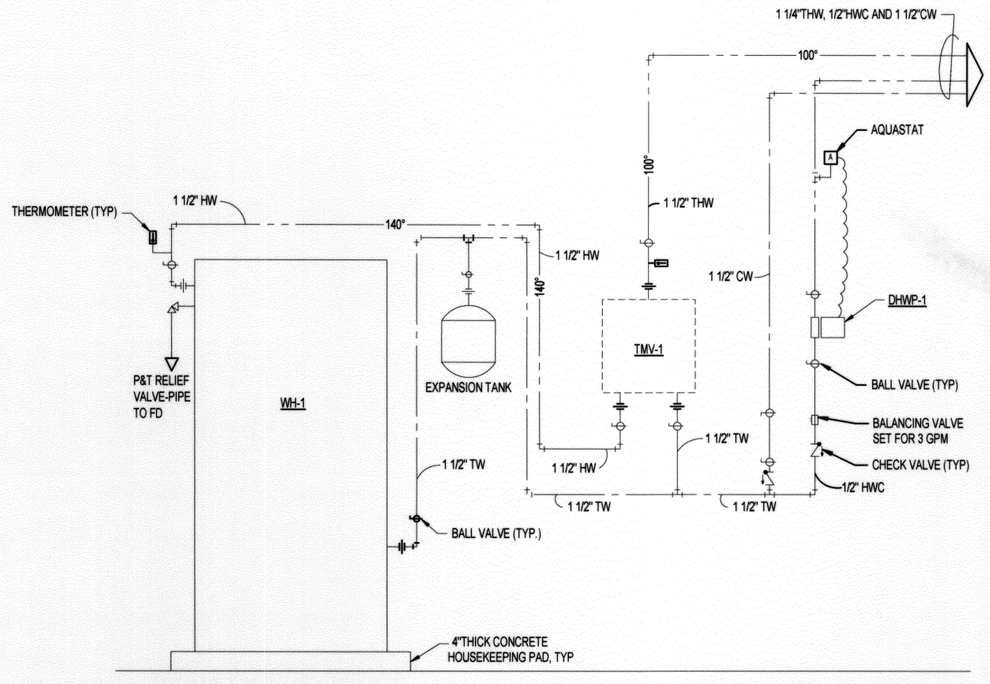

WATER HEATING SYSTEM

TEMPERING VALVE (TMV-1)

INSTALL TMV-1 IN STRICT ACCORDANCE W/ MFG RECOMMENDATIONS.

4 WATER HEATER DETAIL - ELECTRIC

SCALE: NONE

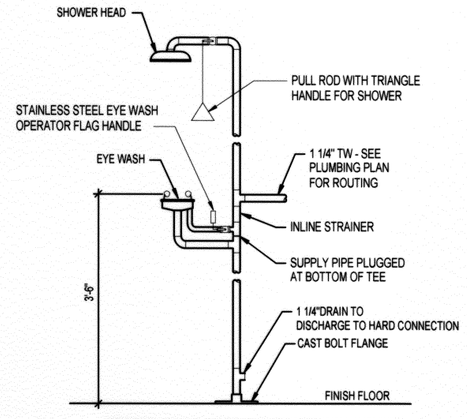

NOTE:
MEETS ANSI / ISEA Z358.1-2014 AS THE GROUND WATER TEMPERATURE IN TULSA, OK IS ABOVE 55 DEGREES F DURING BUILDING OPERATION.

3 SHOWER/EYE WASH DETAIL

SCALE: NONE

LICENSED PROFESSIONAL ENGINEER — JESSICA E. McFARLAND — 28394 — 10/24/16 — OKLAHOMA

PEC
PROFESSIONAL ENGINEERING CONSULTANTS, P.A.
4150 S. 100TH EAST AVE., SUITE 401
CHEROKEE BLDG. TULSA, OK 74146
918-664-5400 www.pec1.com

GH2 ARCHITECTS

P401 PLUMBING DETAILS

PROJECT NO. 147400 CONTRACT # 147400

TULSA PARKS DEPARTMENT
LACY POOL RECONSTRUCTION

CITY OF TULSA, OKLAHOMA
ENGINEERING SERVICES DEPARTMENT

PLANS AND ESTIMATES PREPARED BY:
GH2 ARCHITECTS, LLC.

REVISION	BY	DATE

PLAN SCALE: N/A	DRAWN	AJD	10/24/2016	APPROVED:
	DESIGNED	AJD	10/24/2016	
	SURVEY			
PROFILE SCALE:	PROJ. MGR.			
HORIZONTAL: N/A	LEAD ENGR.			
	FIELD MGR.			
VERTICAL N/A	RECOMMENDED: DESIGN MANAGER			CITY ENGINEER
FILE:	DRAWING: Designer		DATE:	
ATLAS PAGE NO: 116			SHEET 56 OF 74 SHEETS	

10/24/2016 1:04:13 PM

© 2016 COPYRIGHT GH2 ARCHITECTS, LLC

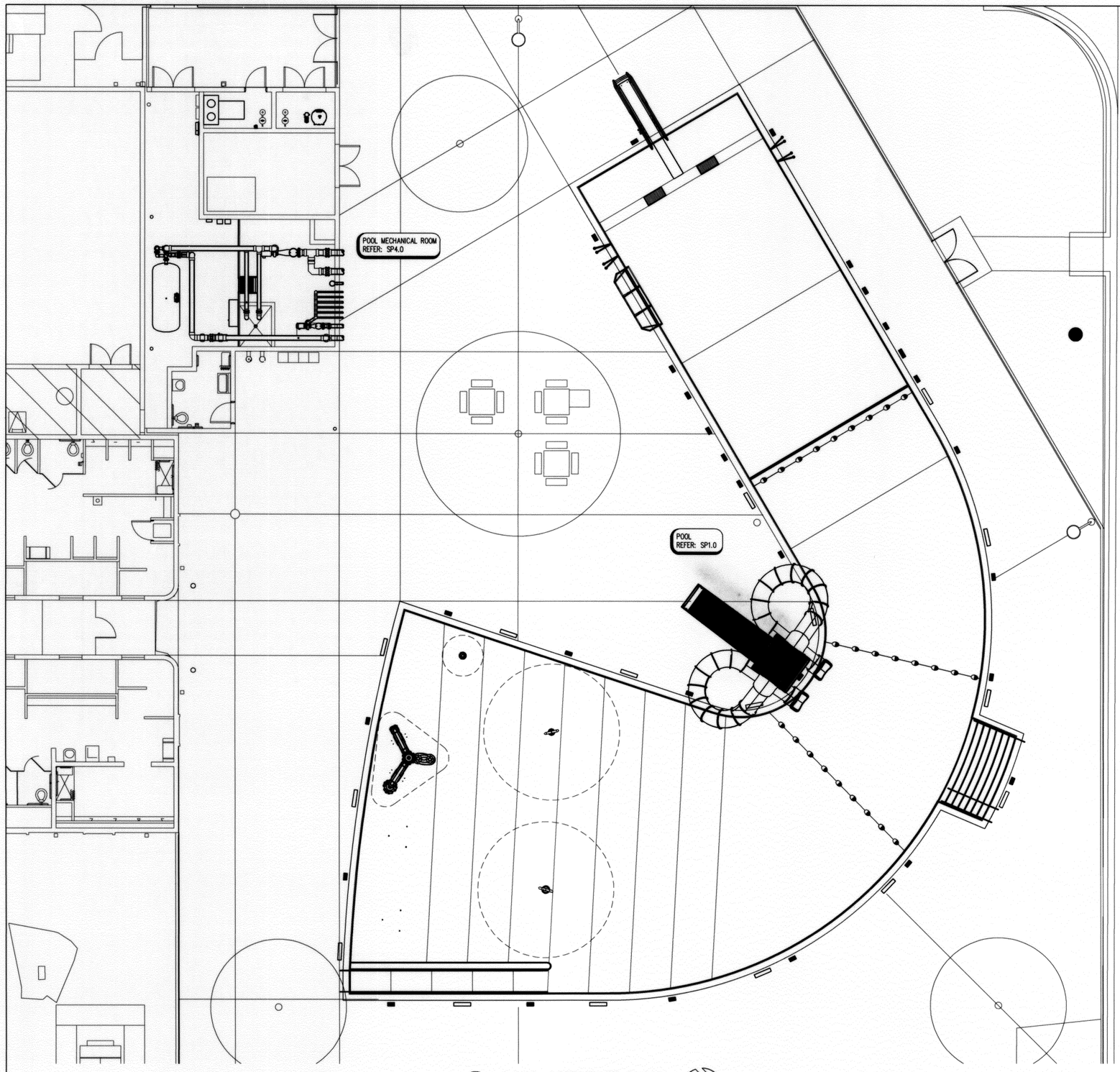

1 SP0.0 **POOL REFERENCE PLAN**
1/8" = 1'-0"

DRAWING INDEX

SHEET	DESCRIPTION
SP0.0	POOL REFERENCE PLAN
SP1.0	POOL PLAN
SP1.1	POOL SECTIONS
SP1.2	POOL DETAILS
SP1.3	POOL DETAILS
SP1.4	POOL DETAILS
SP2.0	POOL LOCATION POINT PLAN
SP3.0	POOL SUCTION PIPING PLAN
SP3.1	POOL RETURN PIPING PLAN
SP4.0	POOL MECHANICAL ROOM PLAN & SECTIONS
SP4.1	POOL MECHANICAL DETAILS
SP4.2	POOL MECHANICAL DETAILS
SP4.3	POOL MECHANICAL DETAILS
SP5.0	POOL SYSTEMS SCHEMATIC
SP6.0	POOL STRUCTURAL PLAN
SP6.1	POOL STRUCTURAL NOTES & DETAILS
SP6.2	POOL STRUCTURAL DETAILS
SP6.3	POOL STRUCTURAL SECTIONS

DESIGN DATA

	UNITS	POOL
LENGTH	FT.	VARIES
WIDTH	FT.	VARIES
WATER SURFACE AREA	SQ. FT.	5,997
PERIMETER	FT.	455
VOLUME	GALLON	201,910
CIRCULATION SYSTEM & FILTERS		
POOL TURNOVER RATE	HOUR	3.74
RECIRCULATION RATE	GPM	900
FILTRATION RATE (MAX. DESIGN)	GPM/SQ. FT.	15.0
FILTER AREA REQUIRED	SQ. FT.	60.0
FILTRATION RATE (ACTUAL)	GPM/SQ. FT.	12.6
FILTRATION AREA (ACTUAL)	SQ. FT.	71.4
FILTER BACKWASH RATE	GPM/SQ. FT.	15.0
BACKWASH FLOW RATE (PER FILTER)	GPM	536
SURGE CAPACITY	GALLON	8617
SEWER CAPACITY	GPM	287
DESIGN FILL RATE	GPM	70
DESIGN FILL TIME	HOUR	48
BATHER LOAD	PERSON	363

GENERAL POOL NOTES

1. ◆ DENOTES WATER DEPTH FROM WATER LEVEL.
2. POOL FINISH SHALL BE EPOXY PAINT WITH TILE DECK MARKINGS.
3. ALL POOL FLOOR AREAS 18" AND SHALLOWER AND ALL STAIR TREADS SHALL HAVE A SLIP RESISTANT FINISH.
4. TYPICAL POOL DIMENSIONS SHOWN ARE FROM INSIDE FINISHED POOL WALL.
5. REFER TO POOL STRUCTURAL DRAWINGS FOR ALL DIMENSIONS RELATING TO THE THICKNESS OF THE POOL SHELL.
6. THE JUNCTION BETWEEN THE SWIMMING POOL WALL AND THE FLOOR SHALL BE COVED WITH A MINIMUM 6" RADIUS, OR AS NOTED.
7. DEPTH MARKERS AND WARNING SIGNS ARE SHOWN IN APPROXIMATE LOCATIONS. DEPTH MARKERS AND WARNING SIGNS SHALL NOT EXCEED 25'-0" APART FROM EACH OTHER, AND SHALL BE PLACED AT EVEN FOOT INTERVALS PER LOCAL CODE.
8. ALL PROPRIETARY NAMES MENTIONED ARE TO DESIGNATE PERFORMANCE STANDARDS. EQUIVALENT PRODUCTS SHALL BE SUBMITTED FOR APPROVAL.
9. SLIP RESISTANT DECK FINISH REQUIRED. REFER TO ARCHITECT.
10. REFER TO PLUMBING FOR DECK DRAINS AND HOSE BIBBS.
11. ALL SURFACE WATER SHALL DRAIN AWAY FROM THE POOL.
12. REFER TO ELECTRICAL FOR GFI OUTLETS ON POOL DECK.
13. ELECTRICAL INSPECTOR SHALL APPROVE INSTALLATION OF BONDING GRID FOR POOL REINFORCING AND ALL POOL EMBEDS PRIOR TO PLACEMENT OF CONCRETE.
14. NO GROUND WATER SHALL BE ALLOWED TO RISE ABOVE ANY PORTION OF THE POOL BOTTOM DURING CONSTRUCTION.
15. ALL METALLIC PORTIONS OF PLAY FEATURE SHALL BE EPOXY COATED STAINLESS STEEL.

LICENSED PROFESSIONAL ENGINEER
DARREN THOMAS BEVARD 24491
OKLAHOMA

GH2 ARCHITECTS

SP0.0 POOL REFERENCE PLAN

PROJECT NO. 147400 CONTRACT # 147400

TULSA PARKS DEPARTMENT
LACY POOL RECONSTRUCTION

CITY OF TULSA, OKLAHOMA
ENGINEERING SERVICES DEPARTMENT

PLANS AND ESTIMATES PREPARED BY:
GH2 ARCHITECTS, LLC.

REVISION	BY	DATE

PLAN SCALE: AS NOTED
PROFILE SCALE:
HORIZONTAL: x;1" = ??
VERTICAL x;1" = ?

DRAWN	NRK	10/24/2016
DESIGNED	TDS	10/24/2016
SURVEY		
PROJ. MGR.		10/16
LEAD ENGR.		10/16
FIELD MGR.		10/16
RECOMMENDED: DESIGN MANAGER		

APPROVED: CITY ENGINEER

FILE: DRAWING: SP0.0
ATLAS PAGE NO: 116
DATE: 11.11.16
SHEET 57 OF 74 SHEETS

COUNSILMAN•HUNSAKER
ph: 314.894.1245 • www.chh2o.com

2134 N. MADISON PLACE, TULSA, OK GH2 PROJECT #: 20140022.01

© 2016 COUNSILMAN•HUNSAKER

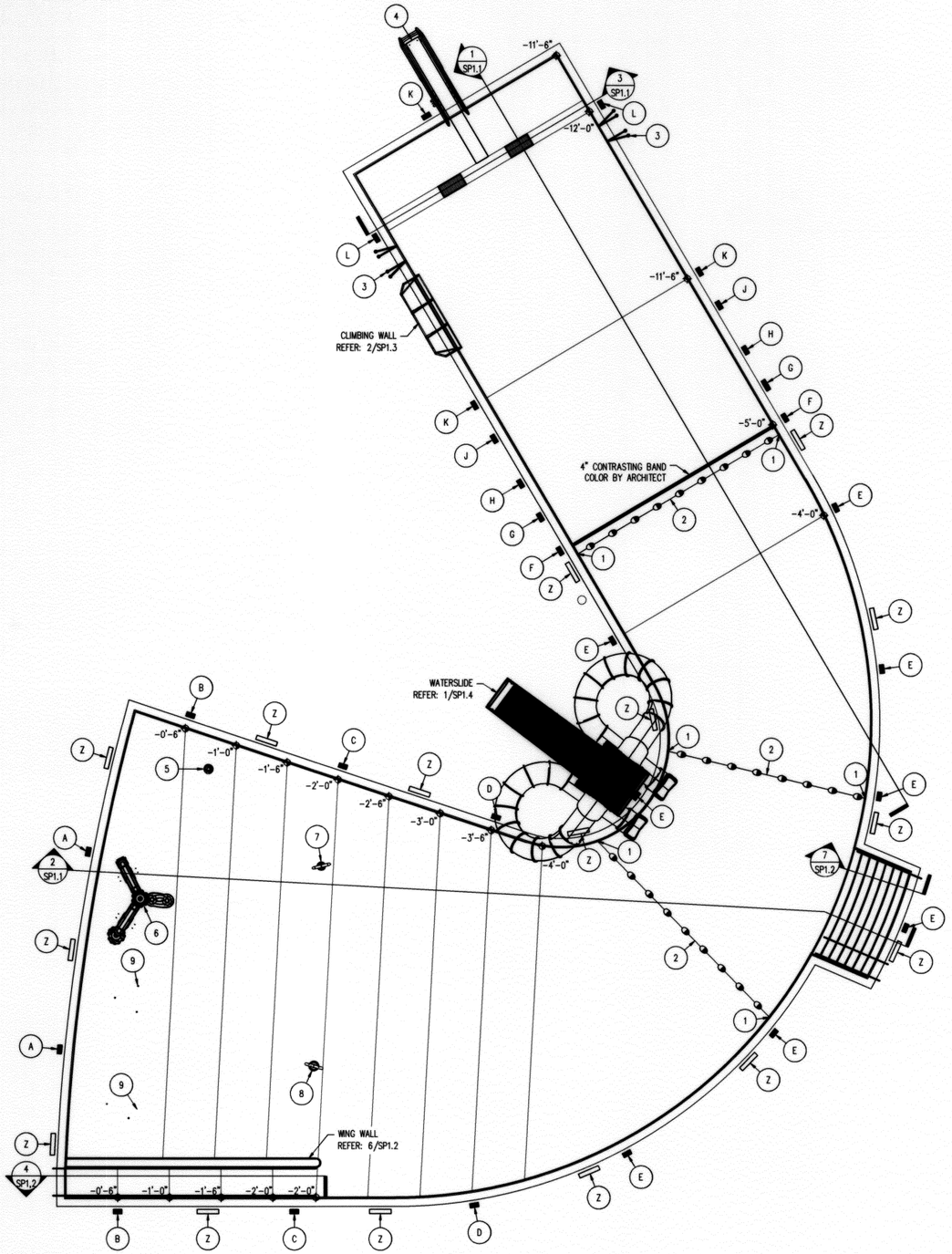

1 SP1.0 **POOL PLAN**
1/8" = 1'-0"

DEPTH & WARNING SIGNAGE SCHEDULE

ID	SIGNAGE
A	0 FT 0 IN
B	0 FT 6 IN
C	2 FT 0 IN
D	3 FT 6 IN
E	4 FT 0 IN
F	5 FT 0 IN
G	6 FT 6 IN
H	8 FT 0 IN
J	10 FT 0 IN
K	11 FT 6 IN
L	12 FT 0 IN
Z	NO DIVING

POOL EQUIPMENT LEGEND

LEGEND	ID	ITEM
•	1	SAFETY ROPE ANCHOR REFER: 1/SP1.2
—●—	2	SAFETY ROPE
	3	GRAB RAILS AND RECESSED STEPS REFER: 1/SP1.3
	4	ONE METER DIVING PLATFORM AND MOUNT REFER: 11/SP1.2
	5	AQUA DOME FEATURE REFER: 4/SP1.3
	6	CASCADES NO. 1 FEATURE REFER: 5/SP1.3
	7	SUNSPRAY NO. 1 FEATURE REFER: 6/SP1.3
	8	SUNSPRAY NO. 2 FEATURE REFER: 7/SP1.3
	9	BUBBLERS REFER: 3/SP1.3
	N/A	DEPTH MARKERS REFER: 9/SP1.2
	N/A	WARNING SIGNS REFER: 9/SP1.2

GH2 ARCHITECTS

SP1.0 POOL PLAN

PROJECT NO. 147400 CONTRACT # 147400

TULSA PARKS DEPARTMENT
LACY POOL RECONSTRUCTION

CITY OF TULSA, OKLAHOMA
ENGINEERING SERVICES DEPARTMENT

PLANS AND ESTIMATES PREPARED BY:
GH2 ARCHITECTS, LLC.

LICENSED PROFESSIONAL ENGINEER
DARREN THOMAS BEVARD 24491
OKLAHOMA

REVISION	BY	DATE

PLAN SCALE: AS NOTED
PROFILE SCALE:
HORIZONTAL: x:1" = 7'
VERTICAL x:1" = 7

DRAWN	NRK	10/24/2016
DESIGNED	TDS	10/24/2016
SURVEY		
PROJ. MGR.		10/26/16
LEAD ENGR.		
FIELD MGR.		10/16
RECOMMENDED		11/3 11/26
DESIGN MANAGER		

APPROVED:
CITY ENGINEER
DATE: 11.11.16

FILE: DRAWING: SP1.0
ATLAS PAGE NO: 116
SHEET 58 OF 74 SHEETS

COUNSILMAN•HUNSAKER
ph: 314.894.1246 • www.chh2o.com

2134 N. MADISON PLACE, TULSA, OK GH2 PROJECT #: 20140022.01

© 2016 COUNSILMAN • HUNSAKER

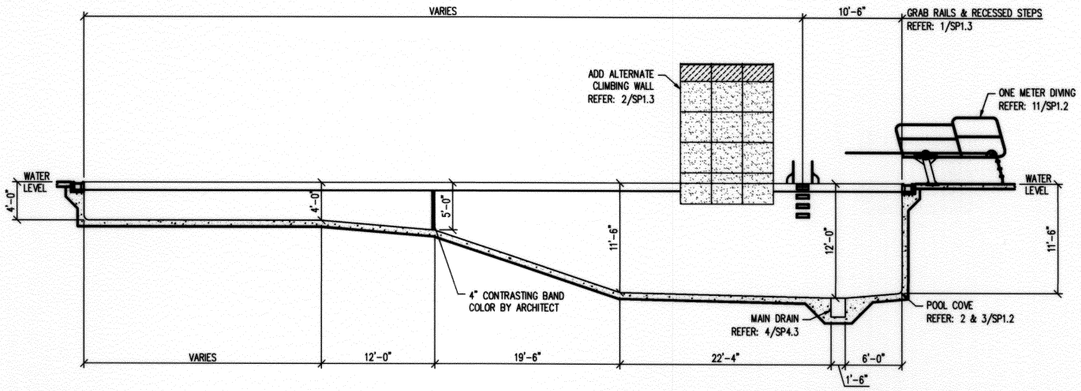

1 / SP1.1 **POOL SECTION**

1/8" = 1'-0"

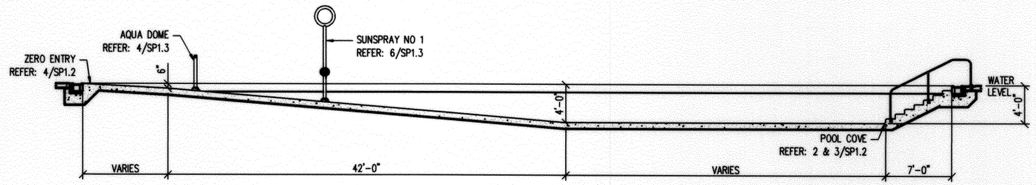

2 / SP1.1 **POOL SECTION**

1/8" = 1'-0"

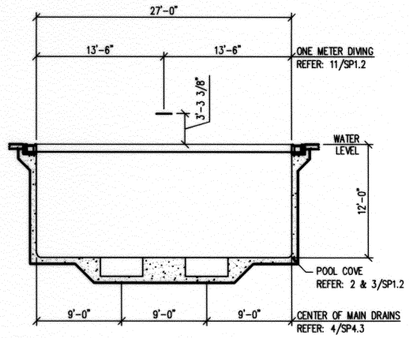

3 / SP1.1 **POOL SECTION**

1/8" = 1'-0"

COUNSILMAN•HUNSAKER
ph: 314.894.1245 - www.chh2o.com

GH2 ARCHITECTS

LICENSED PROFESSIONAL ENGINEER
DARREN THOMAS BEVARD
24491
OKLAHOMA

SP1.1 POOL SECTIONS

PROJECT NO. 147400 CONTRACT # 147400

TULSA PARKS DEPARTMENT
LACY POOL RECONSTRUCTION

CITY OF TULSA, OKLAHOMA
ENGINEERING SERVICES DEPARTMENT

PLANS AND ESTIMATES PREPARED BY:
GH2 ARCHITECTS, LLC.

REVISION	BY	DATE

PLAN SCALE: AS NOTED
PROFILE SCALE:
HORIZONTAL: x;1" = ??
VERTICAL x;1" = ?

DRAWN	NRK	10/24/2016
DESIGNED	TDS	10/24/2016
SURVEY		
PROJ. MGR.		10/16
LEAD ENGR.		
FIELD MGR.		10/16
RECOMMENDED:		
DESIGN MANAGER		

APPROVED:

CITY ENGINEER

FILE: DRAWING: SP1.1

DATE: 11.11.16

ATLAS PAGE NO: 116

SHEET 59 OF 74 SHEETS

© 2016 COUNSILMAN•HUNSAKER

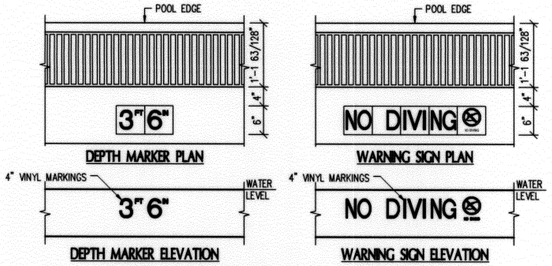

NOTE:
1. DEPTH MARKERS & WARNING SIGNS SHALL BE PROVIDED AS 6"x6" TILES WITH MINIMUM 4" TALL CONTRASTING LETTERS AND NUMBERS. COLOR BY ARCHITECT.
2. PROVIDE NO DIVING WARNING SIGNS WITH 6"x6" TILE DISPLAYING INTERNATIONAL NO DIVING SYMBOL.
3. ALL HORIZONTAL TILE INSTALLATIONS SHALL HAVE A SLIP RESISTANT FINISH. ALL VERTICAL TILE INSTALLATIONS SHALL HAVE A SMOOTH GLAZED FINISH.
4. LOCATE ALL DEPTH MARKER AND WARNING SIGN TILE SUCH THAT THEY DO NOT CONFLICT WITH PAVING JOINTS.

9 / SP1.2 **DEPTH MARKERS AND WARNING SIGNS**
3/4" = 1'-0"

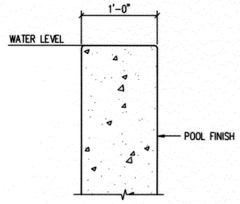

6 / SP1.2 **WING WALL SECTION**
1" = 1'-0"

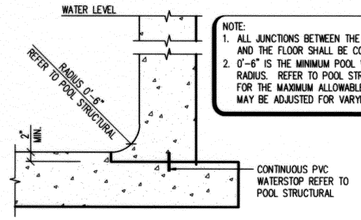

NOTE:
1. ALL JUNCTIONS BETWEEN THE SWIMMING POOL WALL AND THE FLOOR SHALL BE COVED.
2. 0'-6" IS THE MINIMUM POOL WALL TO FLOOR COVE RADIUS. REFER TO POOL STRUCTURAL DRAWINGS FOR THE MAXIMUM ALLOWABLE COVE RADIUS. RADIUS MAY BE ADJUSTED FOR VARYING WATER DEPTHS.

3 / SP1.2 **SHOTCRETE COVE**
3/4" = 1'-0"

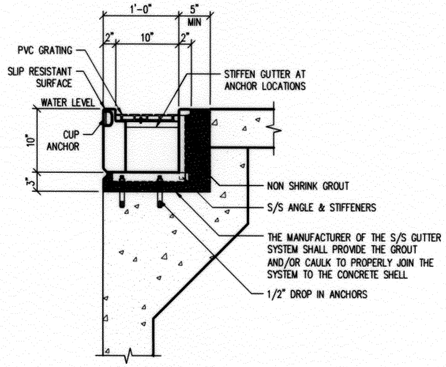

1 / SP1.2 **S/S DECK LEVEL GUTTER**
1" = 1'-0"

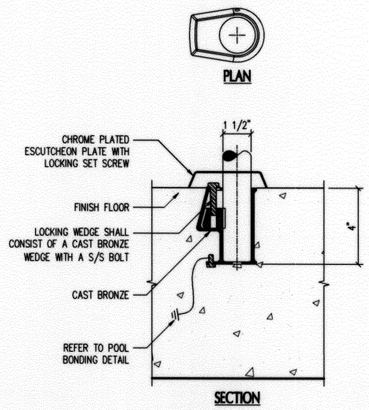

10 / SP1.2 **WEDGE ANCHOR**
3" = 1'-0"

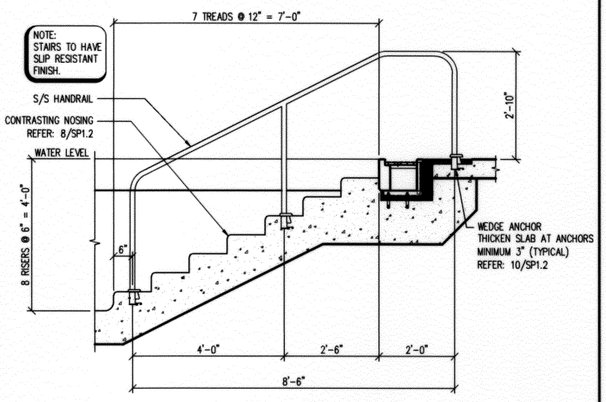

7 / SP1.2 **STAIR SECTION**
1/2" = 1'-0"

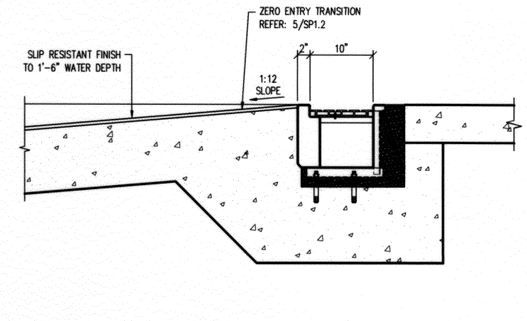

4 / SP1.2 **ZERO ENTRY SECTION**
1" = 1'-0"

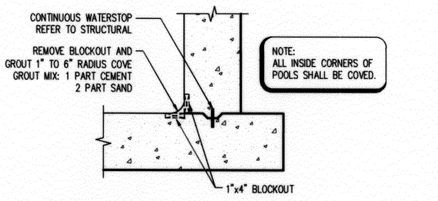

NOTE:
ALL INSIDE CORNERS OF POOLS SHALL BE COVED.

2 / SP1.2 **CAST IN PLACE CONCRETE COVE**
3/4" = 1'-0"

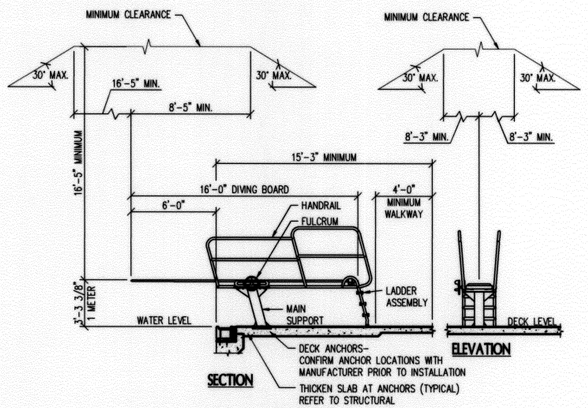

11 / SP1.2 **ONE METER DIVING STAND**
3/16" = 1'-0"

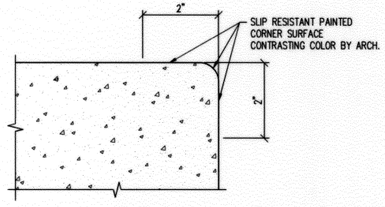

8 / SP1.2 **CONTRASTING NOSING**
6" = 1'-0"

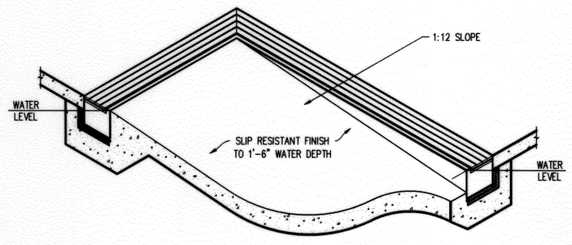

5 / SP1.2 **ZERO ENTRY ISOMETRIC**
3/8" = 1'-0"

COUNSILMAN•HUNSAKER
ph: 314.894.1248 • www.chh1to.com

GH2 ARCHITECTS

SP1.2 POOL DETAILS

PROJECT NO. 147400 CONTRACT # 147400

TULSA PARKS DEPARTMENT
LACY POOL RECONSTRUCTION

CITY OF TULSA, OKLAHOMA
ENGINEERING SERVICES DEPARTMENT

PLANS AND ESTIMATES PREPARED BY:
GH2 ARCHITECTS, LLC.

LICENSED PROFESSIONAL ENGINEER — DARREN THOMAS BEVARD 24491 — OKLAHOMA

REVISION	BY	DATE

PLAN SCALE: AS NOTED
PROFILE SCALE:
HORIZONTAL: x:1" = ??
VERTICAL x:1" = ?

DRAWN	NRK	10/24/2016
DESIGNED	TDS	10/24/2016
SURVEY		
PROJ. MGR.		
LEAD ENGR.		
FIELD MGR.		
RECOMMENDED: DESIGN MANAGER		

APPROVED: CITY ENGINEER

FILE: DRAWING: SP1.2
DATE: 11.11.16
ATLAS PAGE NO: 116
SHEET 60 OF 74 SHEETS

2134 N. MADISON PLACE, TULSA, OK GH2 PROJECT #: 20140022.01

© 2016 COUNSILMAN • HUNSAKER

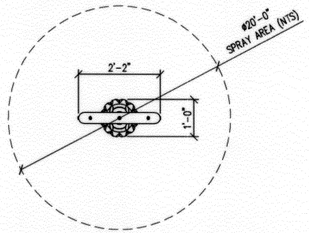

PLAN

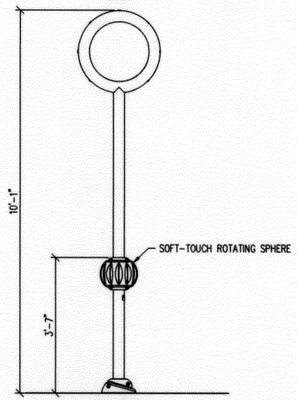

ELEVATION

6 SP1.3 SUNSPRAY NO 1 FEATURE

1/2" = 1'-0"

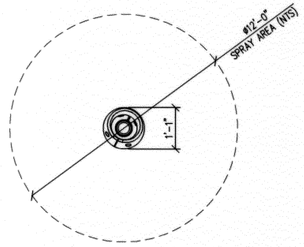

PLAN

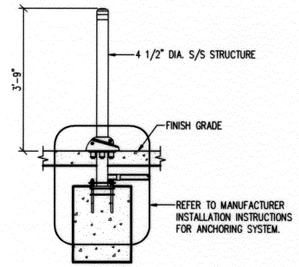

ELEVATION

4 SP1.3 AQUA DOME FEATURE

1/2" = 1'-0"

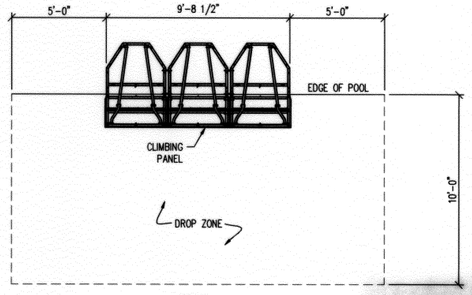

PLAN

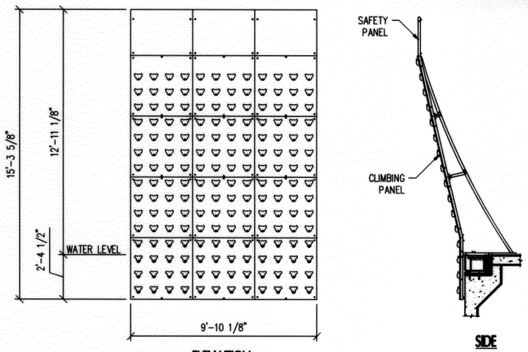

ELEVATION SIDE

2 SP1.3 ADD ALTERNATE #A1 - CLIMBING WALL

1/4" = 1'-0"

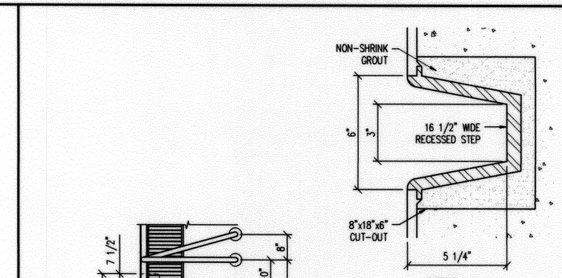

DETAIL A-A
3" = 1'-0"

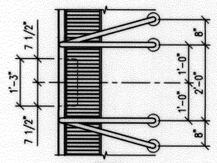

PLAN

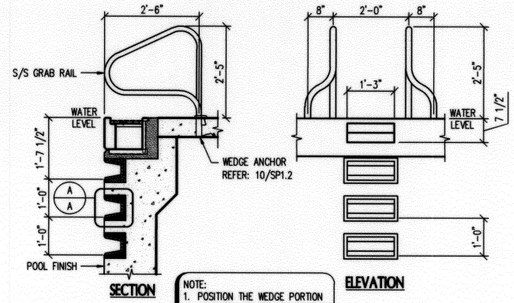

SECTION ELEVATION

NOTE:
1. POSITION THE WEDGE PORTION OF EACH ANCHOR 180 DEGREES FROM THE WEDGE PORTION OF THE ADJACENT ANCHOR.
2. REFER TO SECTION (SP1.1) TO DETERMINE WHEN FOURTH STEP IS REQUIRED.

1 SP1.3 GRAB RAILS & RECESSED STEPS

1/2" = 1'-0"

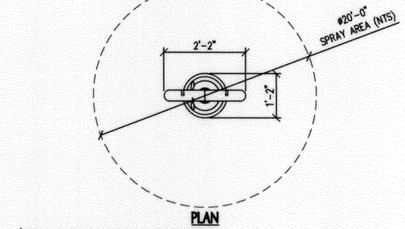

PLAN

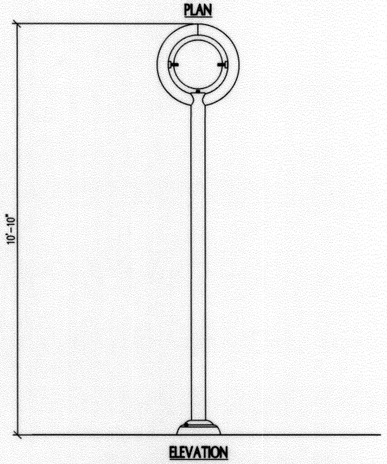

ELEVATION

7 SP1.3 SUNSPRAY NO 2 FEATURE

1/2" = 1'-0"

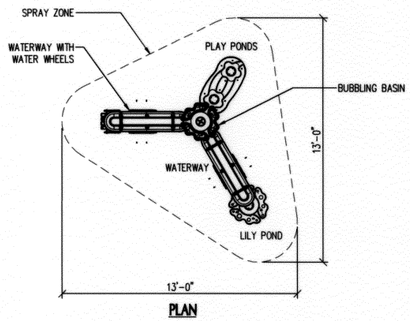

PLAN

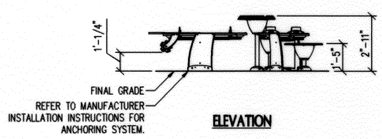

ELEVATION

5 SP1.3 CASCADES NO 1 FEATURE

1/4" = 1'-0"

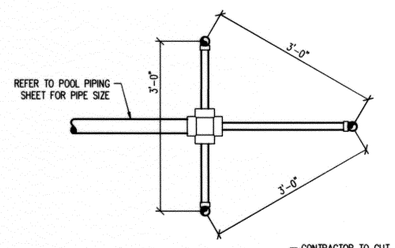

PLAN

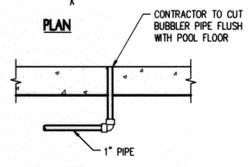

ELEVATION

3 SP1.3 BUBBLER FEATURE

3/4" = 1'-0"

COUNSILMAN•HUNSAKER
ph: 314.894.1245 • www.chh2o.com

GH2 ARCHITECTS

SP1.3 POOL DETAILS

PROJECT NO. 147400 CONTRACT # 147400

TULSA PARKS DEPARTMENT
LACY POOL RECONSTRUCTION

CITY OF TULSA, OKLAHOMA
ENGINEERING SERVICES DEPARTMENT

LICENSED PROFESSIONAL ENGINEER
DARREN THOMAS BEVARD
24491
OKLAHOMA

PLANS AND ESTIMATES PREPARED BY:
GH2 ARCHITECTS, LLC.

REVISION	BY	DATE

PLAN SCALE: AS NOTED
PROFILE SCALE:
HORIZONTAL: x;1" = ??
VERTICAL x;1" = ?'

			APPROVED:
DRAWN	NRK	10/24/2016	
DESIGNED	TDS	10/24/2016	
SURVEY			
PROJ. MGR.		10/16	
LEAD ENGR.			
FIELD MGR.		10/16	
RECOMMENDED: DESIGN MANAGER			CITY ENGINEER

FILE: DRAWING: SP1.3
DATE: 11.17.16
ATLAS PAGE NO: 116
SHEET 61 OF 74 SHEETS

2134 N. MADISON PLACE, TULSA, OK GH2 PROJECT #: 20140022.01

© 2016 COUNSILMAN • HUNSAKER

WATERSLIDE DESIGN DATA		
POOL	WATERSLIDE "A"	WATERSLIDE "B"
PLATFORM HEIGHT	8'-0"	8'-0"
WATERSLIDE LENGTH	40'-0"	40'-0"

NOTE:
1. OVERHEAD CLEARANCE TO BOTTOM OF WATERSLIDE AND WATERSLIDE STRUCTURE SHALL BE MINIMUM 6'-8" OVER ALL DECK AREAS INTENDED FOR FOOT TRAFFIC.
2. PROVIDE FOOTING AS DESIGNED BY MANUFACTURER. DESIGN OF WATERSLIDE FOOTING, PIERS, ANCHORS AND SPACING SHALL BE PROVIDED BY WATERSLIDE MANUFACTURER. CALCULATIONS AND SEALED DRAWINGS SHALL BE PROVIDED.

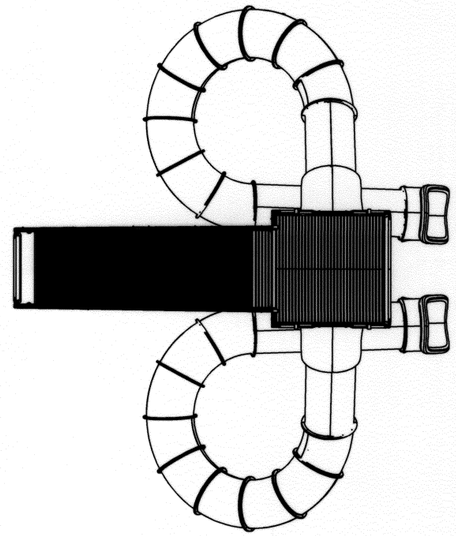

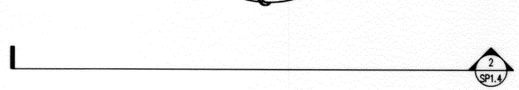

1 SP1.4 **WATERSLIDE PLAN**
1/4" = 1'-0"

NOTE:
PROVIDE FOOTING AS DESIGNED BY MANUFACTURER. DESIGN OF WATERSLIDE FOOTING, PIERS, ANCHORS AND SPACING SHALL BE PROVIDED BY WATERSLIDE MANUFACTURER. CALCULATIONS AND SEALED DRAWINGS SHALL BE PROVIDED.

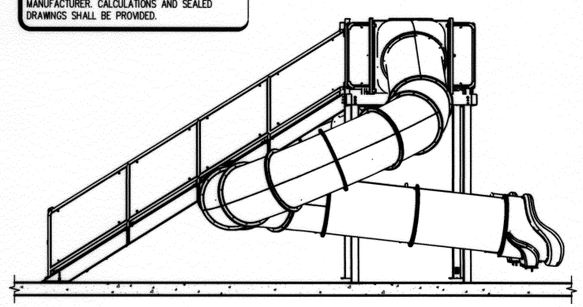

2 SP1.4 **WATERSLIDE ELEVATION**
1/4" = 1'-0"

COUNSILMAN•HUNSAKER
ph: 314.894.1246 • www.chh2o.com

GH2 ARCHITECTS

SP1.4 POOL DETAILS

PROJECT NO. 147400 CONTRACT # 147400

TULSA PARKS DEPARTMENT
LACY POOL RECONSTRUCTION

CITY OF TULSA, OKLAHOMA
ENGINEERING SERVICES DEPARTMENT

PLANS AND ESTIMATES PREPARED BY:
GH2 ARCHITECTS, LLC.

LICENSED PROFESSIONAL ENGINEER
DARREN THOMAS BEVARD
24491
OKLAHOMA

REVISION	BY	DATE

PLAN SCALE: AS NOTED
PROFILE SCALE:
HORIZONTAL: x:1" = ??
VERTICAL x:1" = ?

DRAWN	NRK	10/24/2016
DESIGNED	TDS	10/24/2016
SURVEY		
PROJ. MGR.		10/16
LEAD ENGR.		
FIELD MGR.		10/16
RECOMMENDED: DESIGN MANAGER		

APPROVED: CITY ENGINEER

FILE: DRAWING: SP1.4
DATE: 11.11.16
ATLAS PAGE NO: 116
SHEET 62 OF 74 SHEETS

© 2016 COUNSILMAN • HUNSAKER

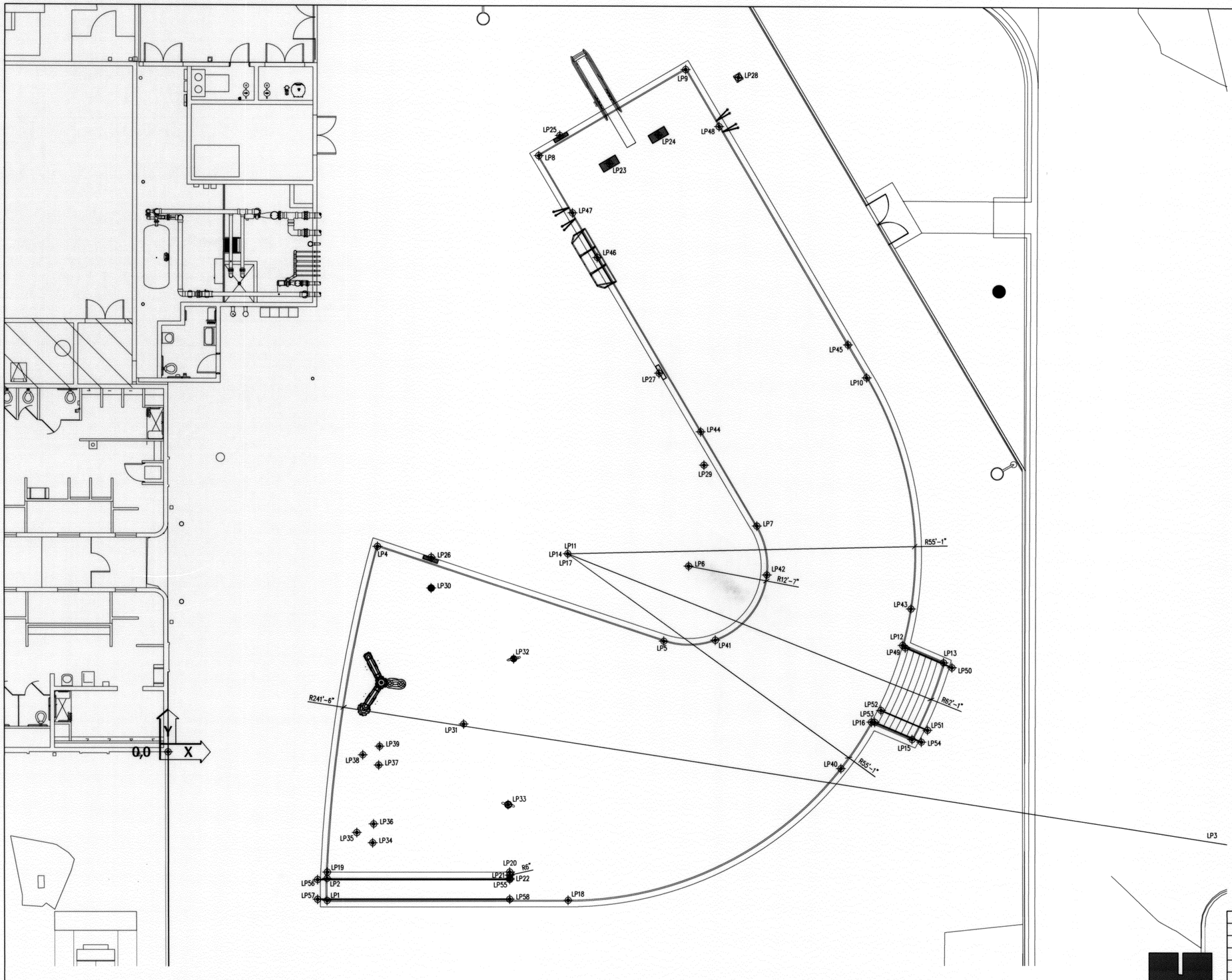

LOCATION POINT SCHEDULE

LP#	X	Y	DESCRIPTION
1	25'-3 1/4"	-23'-6 3/4"	CONSTRUCTION POINT
2	25'-3 1/4"	-20'-0 3/4"	ARC END POINT
3	266'-6 3/4"	-29'-11 1/2"	ARC CENTER POINT
4	33'-4"	32'-8"	ARC END POINT
5	78'-8 1/2"	17'-7 1/2"	ARC END POINT
6	82'-8"	29'-7"	ARC CENTER POINT
7	93'-6"	35'-11 3/4"	ARC END POINT
8	58'-10 1/4"	94'-7"	CONSTRUCTION POINT
9	82'-1 1/4"	108'-3 3/4"	CONSTRUCTION POINT
10	110'-11"	59'-6 1/2"	ARC END POINT
11	63'-6"	31'-6 1/4"	ARC CENTER POINT
12	116'-7 3/4"	17'-0 1/4"	ARC END POINT
13	123'-1 3/4"	14'-3"	ARC END POINT
14	63'-6"	31'-6 1/4"	ARC CENTER POINT
15	118'-1 3/4"	2'-0 1/4"	ARC END POINT
16	111'-8"	4'-9 1/2"	ARC END POINT
17	63'-6"	31'-6 1/4"	ARC CENTER POINT
18	63'-6"	-23'-6 3/4"	ARC END POINT
19	25'-3 3/4"	-19'-0 3/4"	CONSTRUCTION POINT
20	54'-3 1/4"	-19'-0 3/4"	ARC END POINT
21	54'-3 1/4"	-19'-6 3/4"	ARC CENTER POINT
22	54'-3 1/4"	-20'-0 3/4"	ARC END POINT
23	70'-0 1/2"	93'-4"	CENTER OF MAIN DRAIN
24	77'-9 1/2"	97'-11"	CENTER OF MAIN DRAIN
25	62'-2 1/4"	97'-9 1/4"	GUTTER DROPOUT BOX
26	41'-10 1/4"	30'-11 1/2"	GUTTER DROPOUT BOX
27	77'-11 1/2"	60'-2 1/4"	SUPPLY CONVERTER
28	90'-5 3/4"	107'-0 3/4"	SIGHT SUMP
29	85'-1"	45'-7 1/4"	WATER LEVEL CONTROLLER
30	41'-10 1/4"	26'-0 3/4"	AQUA DOME FEATURE
31	47'-0"	4'-5 1/2"	CASCADES NO. 1 FEATURE
32	54'-11 1/4"	14'-10"	SUNSPRAY NO. 1 FEATURE
33	54'-0 1/2"	-8'-4 1/4"	SUNSPRAY NO. 2 FEATURE
34	32'-6 1/4"	-14'-4 3/4"	BUBBLER
35	30'-0"	-12'-9 1/4"	BUBBLER
36	32'-8"	-11'-5"	BUBBLER
37	33'-6"	-2'-0 3/4"	BUBBLER
38	30'-11 3/4"	-5 1/4"	BUBBLER
39	33'-7 3/4"	11"	BUBBLER
40	106'-10"	-2'-7 3/4"	SAFETY ROPE ANCHOR
41	86'-10 1/2"	17'-9 3/4"	SAFETY ROPE ANCHOR
42	95'-1"	28'-2 1/2"	SAFETY ROPE ANCHOR
43	117'-11 3/4"	22'-9 1/2"	SAFETY ROPE ANCHOR
44	84'-6 3/4"	50'-11"	SAFETY ROPE ANCHOR
45	107'-11 1/2"	64'-9"	SAFETY ROPE ANCHOR
46	68'-1 3/4"	78'-5 3/4"	CLIMBING WALL
47	64'-2 1/2"	85'-6 1/2"	GRAB RAILS & RECESSED STEPS
48	87'-5 1/4"	99'-3 1/4"	GRAB RAILS & RECESSED STEPS
49	117'-0 3/4"	16'-7 1/2"	HANDRAIL END POINT
50	124'-5 3/4"	13'-5 1/2"	HANDRAIL END POINT
51	120'-7"	3'-6"	HANDRAIL END POINT
52	113'-2 1/2"	6'-7 3/4"	HANDRAIL END POINT
53	112'-2 3/4"	4'-9"	HANDRAIL END POINT
54	119'-7 1/4"	1'-7 1/4"	HANDRAIL END POINT
55	54'-3 1/4"	-20'-3"	HANDRAIL END POINT
56	23'-9 1/4"	-20'-3"	HANDRAIL END POINT
57	23'-9 1/4"	-23'-4 1/2"	HANDRAIL END POINT
58	54'-3 1/4"	-23'-4 1/2"	HANDRAIL END POINT

1 SP2.0 **POOL LOCATION POINT PLAN**

1/8" = 1'-0"

GH2 ARCHITECTS

SP2.0 POOL LOCATION POINT PLAN

PROJECT NO. 147400 CONTRACT # 147400

TULSA PARKS DEPARTMENT
LACY POOL RECONSTRUCTION

CITY OF TULSA, OKLAHOMA
ENGINEERING SERVICES DEPARTMENT

PLANS AND ESTIMATES PREPARED BY:
GH2 ARCHITECTS, LLC.

LICENSED PROFESSIONAL ENGINEER — DARREN THOMAS BEVARD 24491 — OKLAHOMA

REVISION	BY	DATE

PLAN SCALE: AS NOTED
PROFILE SCALE:
HORIZONTAL: x:1" = 7'
VERTICAL x:1" = 7

DRAWN	NRK	10/24/2016
DESIGNED	TDS	10/24/2016
SURVEY		
PROJ. MGR.		10/16
LEAD ENGR.		
FIELD MGR.		10/16
RECOMMENDED		
DESIGN MANAGER		

APPROVED: CITY ENGINEER

FILE: DRAWING: SP2.0

DATE: 11.11.16

ATLAS PAGE NO: 116

SHEET 63 OF 74 SHEETS

COUNSILMAN•HUNSAKER
ph: 314.894.1246 • www.chh2o.com

2134 N. MADISON PLACE, TULSA, OK GH2 PROJECT #: 20140022.01

© 2016 COUNSILMAN• HUNSAKER

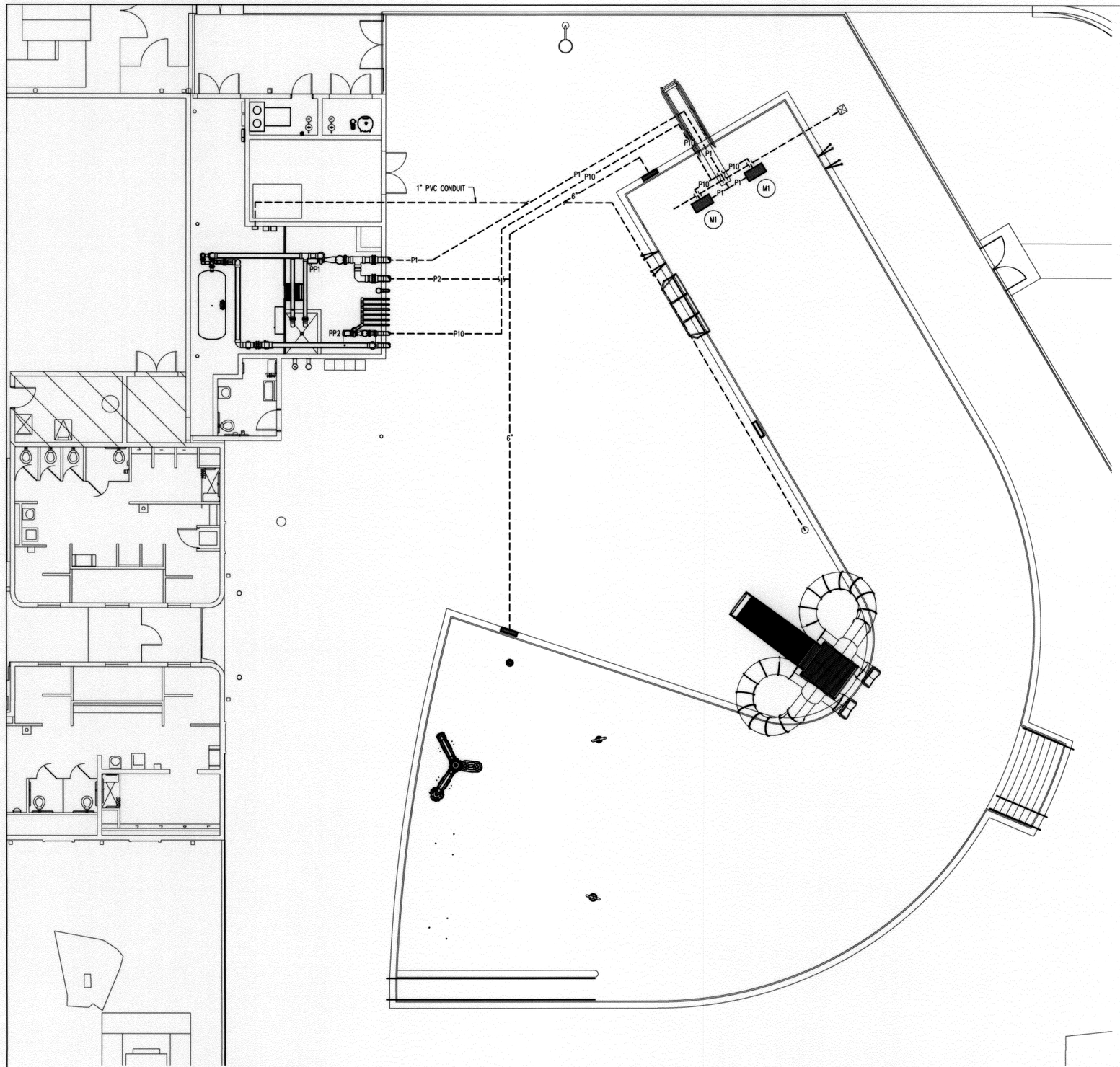

PIPE SCHEDULE

ID	DESCRIPTION
P1	10" FROM MAIN DRAINS TO PP1
P2	10" FROM GUTTER DROPOUT BOXES TO PP1
P3	4" FROM FILL FUNNEL TO MAIN DRAIN
P4	2" FROM MANIFOLD TO WATERSLIDE
P5	2" FROM MANIFOLD TO SUNSPRAY NO. 2 FEATURE
P6	3" FROM MANIFOLD TO BUBBLER FEATURES
P7	2" FROM MANIFOLD TO CASCADES NO. 1 FEATURE
P8	2" FROM MANIFOLD TO SUNSPRAY NO. 1 FEATURE
P9	3" FROM MANIFOLD TO AQUA DOME FEATURE
P10	6" FROM MAIN DRAINS TO PP2
P11	8" FROM POOL FILTERS TO POOL INLETS & SUPPLY CONVERTER
P12	8" FROM PP1 TO POOL FILTERS
P13	6" FROM POOL FILTERS TO BACKWASH CATCH BASIN
P14	6" FROM P12 TO BACKWASH CATCH BASIN
P15	4" FROM PP2 TO MANIFOLD

PIPING LEGEND

LEGEND	QTY.	ITEM
POOL		
⊠	1	SIGHT SUMP REFER: 5/SP4.3
▭	2	GUTTER DROPOUT BOX REFER: 1/SP4.3
▭	1	SUPPLY CONVERTER REFER: 2/SP4.3
▬	2	MAIN DRAIN REFER: 4/SP4.3
○	1	WATER LEVEL CONTROLLER REFER: 7/SP4.3
- - - - -	N/A	BELOW GRADE PIPING

MAIN DRAIN SCHEDULE

ID	DESCRIPTION	SIZE	QTY
M1	LEISURE POOL MAIN DRAINS	18X36	2

NOTE:
1. MAXIMUM FACE VELOCITY SHALL NOT EXCEED 1.5 FEET PER SECOND.
2. THE INSTALLED LIFE OF THE MAIN DRAIN COVER SHALL BE 10 YEARS.
3. ALL MAIN DRAINS SHALL BE INSTALLED IN THE POOL FLOOR. WALL SUMPS WILL NOT BE PERMITTED.

GENERAL PIPING NOTES

1. PROVIDE ALL MATERIALS AND EQUIPMENT AND PERFORM ALL LABOR REQUIRED TO INSTALL COMPLETE AND OPERATIONAL PIPING SYSTEMS AS INDICATED ON THE DRAWINGS, AS SPECIFIED AND AS REQUIRED BY CODE.
2. PIPE SIZES INDICATED ARE NOMINAL, I.P.S.
3. UNLESS OTHERWISE NOTED, ALL OVERHEAD PIPING SHALL BE TIGHT TO UNDERSIDE OF STRUCTURE OR SLAB.
4. ALL BALANCING VALVES AND BUTTERFLY VALVES SHALL BE PROVIDED WITH POSITION INDICATORS AND MAXIMUM ADJUSTABLE STOPS (MEMORY STOPS).
5. ALL VALVES SHALL BE INSTALLED SO THAT THE VALVE REMAINS IN SERVICE WHEN THE EQUIPMENT OR PIPING ON THE EQUIPMENT SIDE OF THE VALVE IS REMOVED.
6. PROVIDE CHAIN WHEEL OPERATORS FOR ALL VALVES IN EQUIPMENT ROOMS MOUNTED GREATER THAN 7'-0" ABOVE FINISHED FLOOR; CHAIN SHALL EXTEND TO 7'-0" ABOVE FINISHED FLOOR LEVEL.
7. INSTALL ALL PIPING WITHOUT FORCING OR SPRINGING.
8. ALL PIPING WORK SHALL BE COORDINATED WITH ALL TRADES AND SITE CONDITIONS. OFFSETS, EXPANSION LOOPS, OR TRANSITIONS IN PIPING AROUND OBSTRUCTIONS SHALL BE PROVIDED AT NO ADDITIONAL COST TO THE OWNER.
9. ALL PIPING INDICATED SHALL BE CONSIDERED DIAGRAMMATIC.
10. ALL SWIMMING POOL PIPING ROUTED BELOW THE POOL SHELL SHALL BE CONCRETE ENCASED SCHEDULE 80 PVC. REFER: 6/SP4.3
11. ALL UNDERGROUND OR EXPOSED SWIMMING POOL PIPING SHALL BE SCHEDULE 80 PVC, UNLESS OTHERWISE NOTED. CONTRACTOR SHALL REFER TO PLANS AND SPECIFICATIONS FOR ANY SPECIFIC REQUIREMENTS REGARDING PLACEMENT AND BACKFILLING OF BELOW GRADE POOL PIPE.
12. ALL DIMENSIONS INDICATED FROM THE FINISH WALL SURFACE AND DO NOT ACCOUNT FOR ANY VARIATIONS IN EITHER GRADE OR SLOPE DISTANCES.
13. THE CHEMICAL SENSOR LINE SHALL BE A 1" DIAMETER, SCHEDULE 80 PVC PIPE EXTENDED FROM THE WET CELL SENSOR TO ITS RESPECTIVE FILL FUNNEL AND THE BACKWASH CATCH BASIN OR PUMP SUCTION.
14. ALL FLOOR INLETS SHALL BE ADJUSTED TO ACHIEVE AN EVEN FLOW DISTRIBUTION THROUGHOUT SYSTEMS.
15. ALL PIPE TEES SHALL BE SIZED FOR LARGEST PIPE CONNECTION.
16. ACID VENT PIPING TO ATMOSPHERE
17. ALL GUTTER DROPOUT LINES SHALL SLOPE 1/8" PER FOOT MINIMUM

POOL PIPING WINTERIZATION NOTES
1. ALL POOL PIPING SHALL HAVE THE CAPABILITY TO BE DRAINED FOR WINTERIZATION.
2. ALL POOL SUCTION AND GRAVITY PIPING SHALL BE INSTALLED WITH A CONSTANT SLOPE TO THE MAIN DRAINS.
3. ALL POOL RETURN PIPING SHALL HAVE THE ABILITY TO COMPLETELY DRAIN TO THE 2" WINTERIZATION LINE AS SHOWN ON THE DRAWINGS.
4. ALL POOL SUCTION AND RETURN PIPING SHALL SLOPE BACK TO THE POOL MECHANICAL ROOM. A WINTERIZATION TAP AND VALVE SHALL BE PROVIDED ON PIPING ALLOWING THE ABILITY FOR ALL PIPING TO BE COMPLETELY DRAINED.
5. BLOW OUT ALL PIPES BY MEANS OF AN AIR BLOWER AND A WINTERIZATION TAP. CAP ALL PIPES. FOR ADDED PROTECTION AGAINST FREEZING PIPES, THE PIPES CAN BE FILLED WITH ANTI-FREEZE. REFER: 5/SP4.2

PUMP SCHEDULE

		SPECIFICATIONS			PUMP REQUIREMENTS REFER TO ELECTRICAL
ID	DESCRIPTION	GPM	TDH	HP	
PP1	RECIRCULATION PUMP	900	70	25	B
PP2	FEATURE PUMP	270	45	5	B , C , D
PP3	CHLORINE BOOSTER PUMP	–	–	3/4	A
PP4	ACID PUMP	–	–	FRAC	A
A	INTERLOCK WITH RECIRCULATION PUMP	B	VARIABLE FREQUENCY DRIVE		
C	REMOTE PUMP START	D	EMERGENCY STOP		

1 / SP3.0 **POOL SUCTION PIPING PLAN**
1/8" = 1'-0"

LICENSED PROFESSIONAL ENGINEER
DARREN THOMAS BEVARD
24491
OKLAHOMA

GH2 ARCHITECTS

SP3.0 POOL SUCTION PIPING PLAN

PROJECT NO. 147400 CONTRACT # 147400

TULSA PARKS DEPARTMENT
LACY POOL RECONSTRUCTION

CITY OF TULSA, OKLAHOMA
ENGINEERING SERVICES DEPARTMENT

PLANS AND ESTIMATES PREPARED BY:
GH2 ARCHITECTS, LLC.

REVISION	BY	DATE

PLAN SCALE: AS NOTED
PROFILE SCALE:
HORIZONTAL: x:1" = ??
VERTICAL x:1" = ?

DRAWN	NRK	10/24/2016
DESIGNED	TDS	10/24/2016
SURVEY		
PROJ. MGR.		
LEAD ENGR.		
FIELD MGR.	RBM	10/16
RECOMMENDED: DESIGN MANAGER	HHS	10/26

APPROVED: CITY ENGINEER

FILE: DRAWING: SP3.0
DATE: 11.11.16
ATLAS PAGE NO: 116
SHEET 64 OF 74 SHEETS

COUNSILMAN•HUNSAKER
ph: 314.894.1245 • www.chh2o.com

© 2016 COUNSILMAN•HUNSAKER

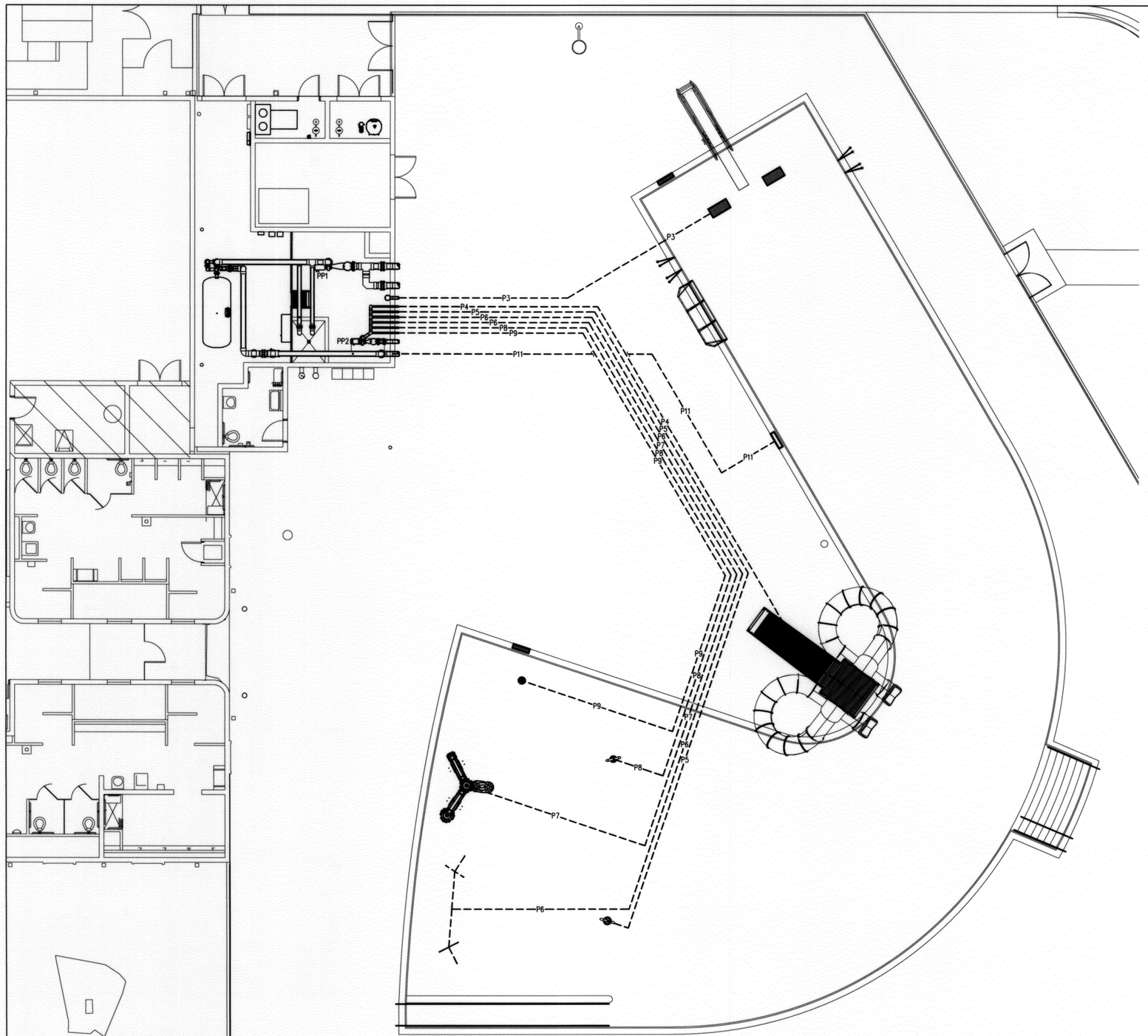

PIPE SCHEDULE

ID	DESCRIPTION
P1	10" FROM MAIN DRAINS TO PP1
P2	10" FROM GUTTER DROPOUT BOXES TO PP1
P3	4" FROM FILL FUNNEL TO MAIN DRAIN
P4	2" FROM MANIFOLD TO WATERSLIDE
P5	2" FROM MANIFOLD TO SUNSPRAY NO. 2 FEATURE
P6	3" FROM MANIFOLD TO BUBBLER FEATURES
P7	2" FROM MANIFOLD TO CASCADES NO. 1 FEATURE
P8	2" FROM MANIFOLD TO SUNSPRAY NO. 1 FEATURE
P9	3" FROM MANIFOLD TO AQUA DOME FEATURE
P10	6" FROM MAIN DRAINS TO PP2
P11	8" FROM POOL FILTERS TO POOL INLETS & SUPPLY CONVERTER
P12	8" FROM PP1 TO POOL FILTERS
P13	6" FROM POOL FILTERS TO BACKWASH CATCH BASIN
P14	6" FROM P12 TO BACKWASH CATCH BASIN
P15	4" FROM PP2 TO MANIFOLD

PIPING LEGEND

LEGEND	QTY.	ITEM
POOL		
⊠	1	SIGHT SUMP REFER: 5/SP4.3
▭	2	GUTTER DROPOUT BOX REFER: 1/SP4.3
▭	1	SUPPLY CONVERTER REFER: 2/SP4.3
▬	2	MAIN DRAIN REFER: 4/SP4.3
○	1	WATER LEVEL CONTROLLER REFER: 7/SP4.3
- - - - -	N/A	BELOW GRADE PIPING

GENERAL PIPING NOTES

1. PROVIDE ALL MATERIALS AND EQUIPMENT AND PERFORM ALL LABOR REQUIRED TO INSTALL COMPLETE AND OPERATIONAL PIPING SYSTEMS AS INDICATED ON THE DRAWINGS, AS SPECIFIED AND AS REQUIRED BY CODE.
2. PIPE SIZES INDICATED ARE NOMINAL, I.P.S.
3. UNLESS OTHERWISE NOTED, ALL OVERHEAD PIPING SHALL BE TIGHT TO UNDERSIDE OF STRUCTURE OR SLAB.
4. ALL BALANCING VALVES AND BUTTERFLY VALVES SHALL BE PROVIDED WITH POSITION INDICATORS AND MAXIMUM ADJUSTABLE STOPS (MEMORY STOPS).
5. ALL VALVES SHALL BE INSTALLED SO THAT THE VALVE REMAINS IN SERVICE WHEN THE EQUIPMENT OR PIPING ON THE EQUIPMENT SIDE OF THE VALVE IS REMOVED.
6. PROVIDE CHAIN WHEEL OPERATORS FOR ALL VALVES IN EQUIPMENT ROOMS MOUNTED GREATER THAN 7'-0" ABOVE FINISHED FLOOR; CHAIN SHALL EXTEND TO 7'-0" ABOVE FINISHED FLOOR LEVEL.
7. INSTALL ALL PIPING WITHOUT FORCING OR SPRINGING.
8. ALL PIPING WORK SHALL BE COORDINATED WITH ALL TRADES AND SITE CONDITIONS. OFFSETS, EXPANSION LOOPS, OR TRANSITIONS IN PIPING AROUND OBSTRUCTIONS SHALL BE PROVIDED AT NO ADDITIONAL COST TO THE OWNER.
9. ALL PIPING INDICATED SHALL BE CONSIDERED DIAGRAMMATIC.
10. ALL SWIMMING POOL PIPING ROUTED BELOW THE POOL SHELL SHALL BE CONCRETE ENCASED SCHEDULE 80 PVC. REFER: 6/SP4.3
11. ALL UNDERGROUND OR EXPOSED SWIMMING POOL PIPING SHALL BE SCHEDULE 80 PVC, UNLESS OTHERWISE NOTED. CONTRACTOR SHALL REFER TO PLANS AND SPECIFICATIONS FOR ANY SPECIFIC REQUIREMENTS REGARDING PLACEMENT AND BACKFILLING OF BELOW GRADE POOL PIPE.
12. ALL DIMENSIONS INDICATED FROM THE FINISH WALL SURFACE AND DO NOT ACCOUNT FOR ANY VARIATIONS IN EITHER GRADE OR SLOPE DISTANCES.
13. THE CHEMICAL SENSOR LINE SHALL BE A 1" DIAMETER, SCHEDULE 80 PVC PIPE EXTENDED FROM THE WET CELL SENSOR TO ITS RESPECTIVE FILL FUNNEL AND THE BACKWASH CATCH BASIN OR PUMP SUCTION.
14. ALL FLOOR INLETS SHALL BE ADJUSTED TO ACHIEVE AN EVEN FLOW DISTRIBUTION THROUGHOUT SYSTEMS.
15. ALL PIPE TEES SHALL BE SIZED FOR LARGEST PIPE CONNECTION.
16. ACID VENT PIPING TO ATMOSPHERE
17. ALL GUTTER DROPOUT LINES SHALL SLOPE 1/8" PER FOOT MINIMUM

POOL PIPING WINTERIZATION NOTES

1. ALL POOL PIPING SHALL HAVE THE CAPABILITY TO BE DRAINED FOR WINTERIZATION.
2. ALL POOL SUCTION AND GRAVITY PIPING SHALL BE INSTALLED WITH A CONSTANT SLOPE TO THE MAIN DRAINS.
3. ALL POOL RETURN PIPING SHALL HAVE THE ABILITY TO COMPLETELY DRAIN TO THE 2" WINTERIZATION LINE AS SHOWN ON THE DRAWINGS.
4. ALL POOL SUCTION AND RETURN PIPING SHALL SLOPE BACK TO THE POOL MECHANICAL ROOM. A WINTERIZATION TAP AND VALVE SHALL BE PROVIDED ON PIPING ALLOWING THE ABILITY FOR ALL PIPING TO BE COMPLETELY DRAINED.
5. BLOW OUT ALL PIPES BY MEANS OF AN AIR BLOWER AND A WINTERIZATION TAP. CAP ALL PIPES. FOR ADDED PROTECTION AGAINST FREEZING PIPES, THE PIPES CAN BE FILLED WITH ANTI-FREEZE. REFER: 5/SP4.2

PUMP SCHEDULE

ID	DESCRIPTION	SPECIFICATIONS GPM	TDH	HP	PUMP REQUIREMENTS REFER TO ELECTRICAL
PP1	RECIRCULATION PUMP	900	70	25	B
PP2	FEATURE PUMP	270	45	5	B , C , D
PP3	CHLORINE BOOSTER PUMP	–	–	3/4	A
PP4	ACID PUMP	–	–	FRAC	A
A	INTERLOCK WITH RECIRCULATION PUMP			B	VARIABLE FREQUENCY DRIVE
C	REMOTE PUMP START			D	EMERGENCY STOP

1 / SP3.1 **POOL RETURN PIPING PLAN**
1/8" = 1'-0"

GH2 ARCHITECTS

SP3.1 POOL RETURN PIPING PLAN

PROJECT NO. 147400 CONTRACT # 147400

TULSA PARKS DEPARTMENT
LACY POOL RECONSTRUCTION

CITY OF TULSA, OKLAHOMA
ENGINEERING SERVICES DEPARTMENT

PLANS AND ESTIMATES PREPARED BY:
GH2 ARCHITECTS, LLC.

LICENSED PROFESSIONAL ENGINEER
DARREN THOMAS BEVARD
24491
OKLAHOMA

REVISION	BY	DATE

PLAN SCALE: AS NOTED
PROFILE SCALE:
HORIZONTAL: x:1" = ??
VERTICAL x:1" = ?

DRAWN	NRK	10/24/2016
DESIGNED	TDS	10/24/2016
SURVEY		
PROJ. MGR.		10/16
LEAD ENGR.		10/16
FIELD MGR.		10/16
RECOMMENDED DESIGN MANAGER		

APPROVED:
CITY ENGINEER
DATE: 11.11.16

FILE: DRAWING: SP3.1
ATLAS PAGE NO: 116
SHEET 65 OF 74 SHEETS

COUNSILMAN•HUNSAKER
ph: 314.884.1246 • www.chh2o.com

2134 N. MADISON PLACE, TULSA, OK GH2 PROJECT #: 20140022.01

© 2016 COUNSILMAN•HUNSAKER

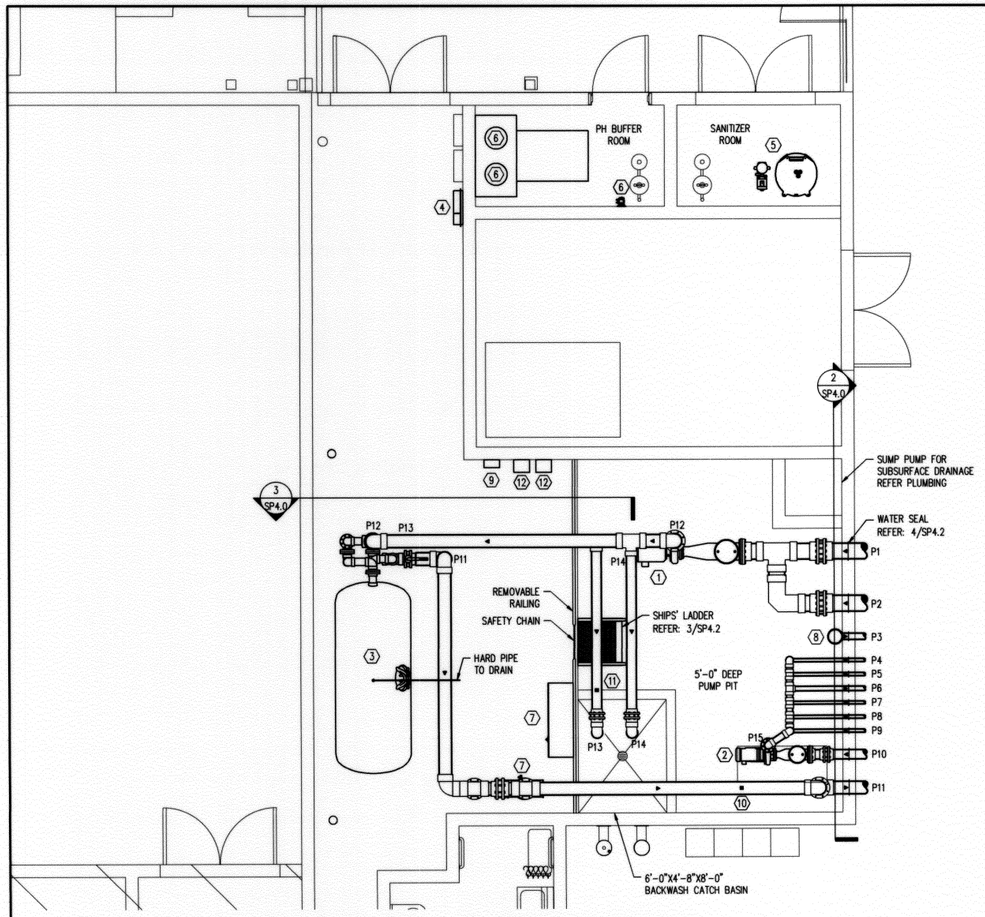

1 SP4.0 POOL MECHANICAL ROOM PLAN

1/4" = 1'-0"

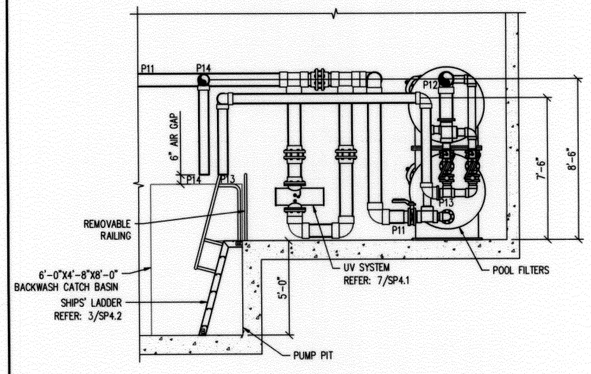

2 SP4.0 POOL MECHANICAL ROOM SECTION

1/4" = 1'-0"

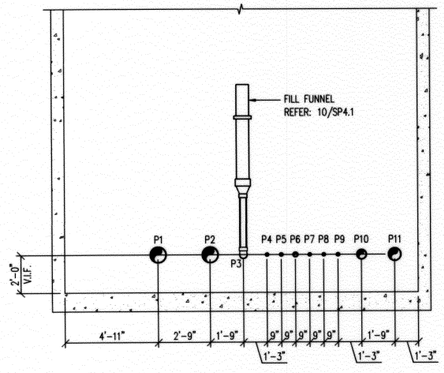

2 SP4.0 POOL MECHANICAL ROOM SECTION

1/4" = 1'-0"

PUMP SCHEDULE

ID	DESCRIPTION	SPECIFICATIONS GPM	TDH	HP	PUMP REQUIREMENTS REFER TO ELECTRICAL
PP1	RECIRCULATION PUMP	900	70	25	B
PP2	FEATURE PUMP	270	45	5	B , C , D
PP3	CHLORINE BOOSTER PUMP	–	–	3/4	A
PP4	ACID PUMP	–	–	FRAC	A

A	INTERLOCK WITH RECIRCULATION PUMP	B	VARIABLE FREQUENCY DRIVE
C	REMOTE PUMP START	D	EMERGENCY STOP

PIPE SCHEDULE

ID	DESCRIPTION
P1	10" FROM MAIN DRAINS TO PP1
P2	10" FROM GUTTER DROPOUT BOXES TO PP1
P3	4" FROM FILL FUNNEL TO MAIN DRAIN
P4	2" FROM MANIFOLD TO WATERSLIDE
P5	2" FROM MANIFOLD TO SUNSPRAY NO. 2 FEATURE
P6	3" FROM MANIFOLD TO BUBBLER FEATURES
P7	2" FROM MANIFOLD TO CASCADES NO. 1 FEATURE
P8	2" FROM MANIFOLD TO SUNSPRAY NO. 1 FEATURE
P9	3" FROM MANIFOLD TO AQUA DOME FEATURE
P10	6" FROM MAIN DRAINS TO PP2
P11	8" FROM POOL FILTERS TO POOL INLETS & SUPPLY CONVERTER
P12	8" FROM PP1 TO POOL FILTERS
P13	6" FROM POOL FILTERS TO BACKWASH CATCH BASIN
P14	6" FROM P12 TO BACKWASH CATCH BASIN
P15	4" FROM PP2 TO MANIFOLD

EQUIPMENT SCHEDULE

ID	ITEM
	POOL
1	RECIRCULATION PUMP (PP1) REFER: 1/SP4.1
2	FEATURE PUMP (PP2) REFER: 1/SP4.1
3	FILTER SYSTEM
4	CHEMICAL CONTROLLER REFER: 3/SP4.1
5	CHLORINATION SYSTEM (PP3) REFER: 6/SP4.1
6	ACID SYSTEM (PP4) REFER: 2/SP4.1
7	UV TREATMENT SYSTEM & CONTROLLER REFER: 7/SP4.1
8	FILL FUNNEL REFER: 10/SP4.1
9	WATER LEVEL CONTROLLER REFER: 7/SP4.3
10	FLOW METER SENSOR REFER: 1/SP4.2
11	IMPACT FLOW METER REFER: 2/SP4.2
12	VFD

GENERAL POOL MECHANICAL ROOM NOTES

1. POOL PUMPS AND STRAINERS SHALL BE INSTALLED ON HOUSEKEEPING PADS UNLESS NOTED OTHERWISE.
2. EQUIPMENT ROOM FLOOR SHALL SLOPE 1/4" TO 1/2" TO FLOOR DRAINS.
3. PUMP PIT FLOOR SHALL SLOPE MIN 1/4" TO 1/2" TO SUMP PIT. REFER TO PLUMBING.
4. THE FLOOR DRAINS INDICATED ARE IN APPROXIMATE LOCATIONS. REFER TO PLUMBING.
5. PROVIDE HOSE BIBBS FOR HOUSE CLEANING PURPOSES. REFER BUILDING MECHANICAL DRAWINGS.
6. THE INSIDE SURFACES OF THE BACKWASH CATCH BASIN SHALL BE WATERPROOFED. REFER TO SPECIFICATION.
7. VENTILATION OF POOL MECHANICAL ROOM AND CHEMICAL STORAGE AREAS PER LOCAL, STATE AND INTERNATIONAL MECHANICAL CODE MINIMUM. REFER TO MECHANICAL.
8. THE FOLLOWING INFORMATION SHALL BE LAMINATED AND POSTED IN THE POOL MECHANICAL ROOM: BACKWASH PROCEDURE, POOL FILLING & DRAINING, VALVE REFERENCE CHART, POOL MECHANICAL ROOM PLAN, POOL PIPING SCHEMATICS & POOL SYSTEMS SCHEMATICS.
9. REFER TO MECHANICAL FOR HVAC SYSTEMS DESIGN.
10. REFER TO ARCHITECTURAL DRAWINGS FOR LADDER RUNGS, SAFETY CHAIN, & REMOVABLE RAILING AT PUMP PIT.

PIPING

1. MINIMUM 7' – 0" CLEARANCE BENEATH ALL OVERHEAD PIPING.
2. PROVIDE AND SUPPORT OVERHEAD AND VERTICAL PIPING PER SPECIFICATION REQUIREMENTS.
3. LABEL AND IDENTIFY ALL PIPING IN COMPLIANCE WITH THE SPECIFICATIONS.
4. ALL FLOW METERS SHALL BE SIZED TO MATCH THE PIPE ON WHICH IT IS INSTALLED. PROVIDE PRESSURE GAUGES ON INFLUENT AND EFFLUENT SIDE OF EACH FILTRATION SYSTEM AND A FULL LINE SIZE FLOW METER ON FILTER RETURN.
5. THE BACKWASH PIPING SHALL TERMINATE NO CLOSER THAN 6" ABOVE THE FLOOD RIM OF THE BACKWASH CATCH BASIN OR TWICE THE PIPE DIAMETER, WHICHEVER IS GREATER.
6. HYDROSTATICALLY TEST ALL PIPING AT 50 PSI FOR TWO HOURS AND MAINTAIN A PRESSURE OF 20 PSI IN ALL PIPING THROUGHOUT CONSTRUCTION. SECURE ALL FIXTURES PER SPECIFICATION REQUIREMENTS BEFORE HYDROSTATIC TEST.

FILTERS

1. ALL FILTER SUPPORTS SHALL BE SEISMICALLY RATED FOR THE SEISMIC ZONE IN WHICH IT IS INSTALLED IN ACCORDANCE WITH LOCAL AND/ OR STATE REQUIREMENTS.
2. FILTER MANUFACTURER SHALL CERTIFY FILTER MEDIA.
3. VALVES SHALL BE PROVIDED TO BACKWASH EACH FILTER VESSEL INDEPENDENTLY.
4. FILTER TANK ASSEMBLIES SHALL BEAR THE NATIONAL SANITATION FOUNDATION SEAL OF APPROVAL FOR A MAXIMUM FLOW RATE OF 20 GPM PER SQUARE FOOT OF FILTER MEDIA.
5. THE BACKWASH THROTTLING VALVE(S) HANDLE SHALL BE REMOVED AND TURNED OVER TO THE OWNER ONCE THE BACKWASH FLOW RATE(S) HAVE BEEN TESTED, ADJUSTED AND BALANCED.
6. PROVIDE 1" DIAMETER, SCHEDULE 80 PIPE FROM THE AUTOMATIC AIR VENT ON EACH FILTER VESSEL TO THE NEAREST FLOOR DRAIN OR BACKWASH CATCH BASIN. THE VENT PIPE SHALL BE SLOPED TO THE DRAIN.
7. VESSEL SHALL BE BACKWASHED AT NO LESS THAN 15.0 GPM/SF.

CHEMICAL TREATMENT

1. CHEMICAL FEED REQUIREMENTS – REFER TO THE POOL SYSTEMS SCHEMATIC(S) ON SP5.0.
2. INTERLOCK POOL CIRCULATION PUMP(S) WITH ITS CORRESPONDING WATER CHEMISTRY CONTROLLER AND CHEMICAL FEED PUMP(S).
3. PROVIDE SIGNAGE ON CHEMICAL ROOM DOORS IN COMPLIANCE WITH THE STATE FIRE CODE. REFER 9/SP4.1.
4. SECURE CHEMICAL METERING PUMP FEED LINES TO WALL AND/OR OVERHEAD WITH CLIPS OR DEVICES THAT DO NOT CRIMP, DISTORT OR ALLOW HIGH AND LOW AREAS IN TUBING RUNS. PROVIDE CHECK VALVE AND SHUT-OFF VALVE BEFORE LINES ENTER POOL RETURN PIPING.
5. WATER CHEMISTRY CONTROLLERS SHALL CONTROL THE SANITIZING SYSTEM AND PH CONTROL SYSTEM AND SHUT THEM DOWN UPON LOSS OF SAMPLE STREAM FLOW.
6. THE CHEMICAL CONTROL SYSTEM BYPASS LINE SHALL SAMPLE WATER AFTER THE FILTERS AND BEFORE THE HEATER BYPASS LINE.
7. VERIFY REMOTE ACCESS CAPABILITY TO ALL CHEMICAL CONTROLLERS. REFER TO ELECTRICAL.

PUMPS

1. PROVIDE INFLUENT AND EFFLUENT GAUGES FOR EACH PUMP. PRESSURE GAUGES HAVE A RANGE OF 0–100 PSI. COMPOUND GAUGES HAVE A RANGE OF 0–30 HG / 0–60 PSI.

ELECTRICAL

1. GFCI'S PROVIDED AT OUTLETS. REFER TO ELECTRICAL.
2. POOL EQUIPMENT ROOM AND CHEMICAL STORAGE AREAS SHALL BE PROVIDED WITH ARTIFICIAL LIGHTING SUFFICIENT TO ILLUMINATE ALL EQUIPMENT AND SUPPLIES. REFER TO ELECTRICAL.

GH2 ARCHITECTS

SP4.0 POOL MECHANICAL ROOM PLAN & SECTIONS

PROJECT NO. 147400 CONTRACT # 147400

TULSA PARKS DEPARTMENT
LACY POOL RECONSTRUCTION

CITY OF TULSA, OKLAHOMA
ENGINEERING SERVICES DEPARTMENT

LICENSED PROFESSIONAL ENGINEER — DARREN THOMAS BEVARD 24491 — OKLAHOMA

PLANS AND ESTIMATES PREPARED BY:
GH2 ARCHITECTS, LLC.

REVISION	BY	DATE

PLAN SCALE: AS NOTED
PROFILE SCALE:
HORIZONTAL: x:1" = 7'
VERTICAL x:1" = 7'

DRAWN	NRK	10/24/2016
DESIGNED	TDS	10/24/2016
SURVEY		
PROJ. MGR.		10/26/16
LEAD ENGR.		
FIELD MGR.		10/26/16
RECOMMENDED		10/26/16
DESIGN MANAGER		

APPROVED:
CITY ENGINEER

FILE: DRAWING: SP4.0
ATLAS PAGE NO: 116
DATE: 11.11.16
SHEET 66 OF 74 SHEETS

COUNSILMAN•HUNSAKER
ph: 314.894.1245 • www.chh2o.com

2134 N. MADISON PLACE, TULSA, OK GH2 PROJECT #: 20140022.01

© 2016 COUNSILMAN • HUNSAKER

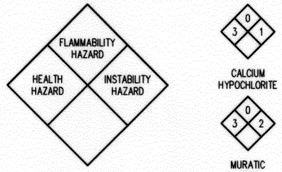

RATING EXPLANATION GUIDE

RATING	HEALTH HAZARD	FLAMMABILITY HAZARD	INSTABILITY HAZARD
4	CAN BE LETHAL	BELOW 73 DEGREES F	MAY EXPLODE AT NORMAL TEMPERATURES AND PRESSURES
3	CAN CAUSE SERIOUS OR PERMANENT INJURY	ABOVE 73 DEGREES, BELOW 100 DEGREES F	MAY EXPLODE AT HIGH TEMPERATURE OR SHOCK
2	CAN CAUSE TEMPORARY INCAPACITATION OR RESIDUAL INJURY	ABOVE 100 DEGREES F, BELOW 200 DEGREES F	VIOLENT CHEMICAL CHANGE AT HIGH TEMPERATURES OR PRESSURES
1	CAN CAUSE SIGNIFICANT IRRITATION	ABOVE 200 DEGREES F	NORMALLY STABLE. HIGH TEMPERATURES MAKE UNSTABLE
0	NO HAZARD	WILL NOT BURN	STABLE

CONFIRM SIGNAGE WITH LOCAL FIRE MARSHAL AND/OR BUILDING CODES PRIOR TO INSTALLATION.

9 SP4.1 **HAZARD SIGNAGE**
NTS

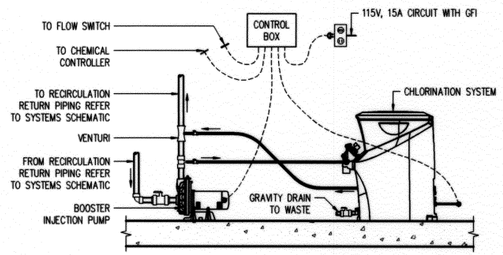

6 SP4.1 **CHLORINATION SYSTEM**
1/2" = 1'-0"

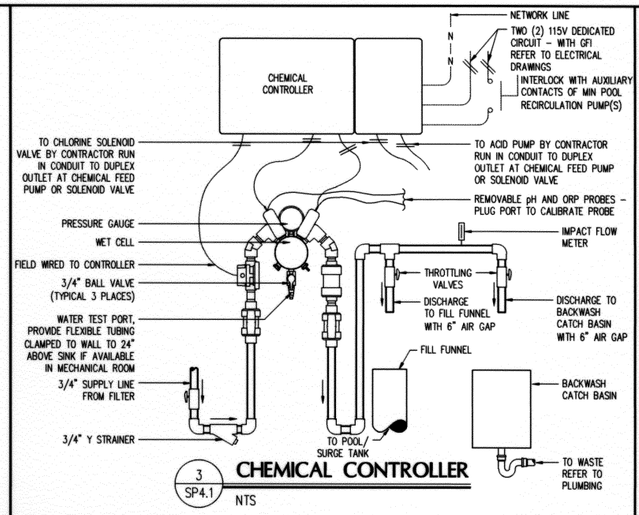

3 SP4.1 **CHEMICAL CONTROLLER**
NTS

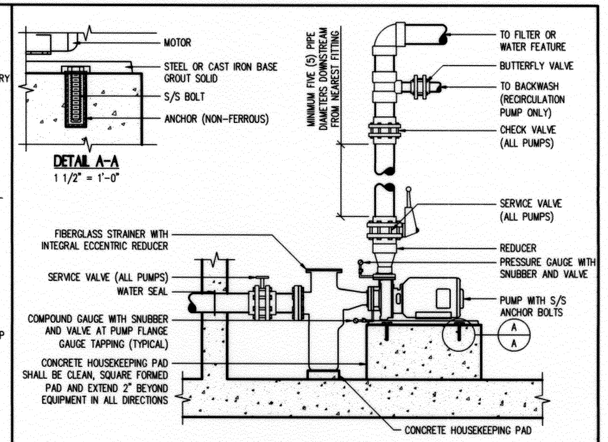

1 SP4.1 **TYPICAL PUMP DETAIL**
1/2" = 1'-0"

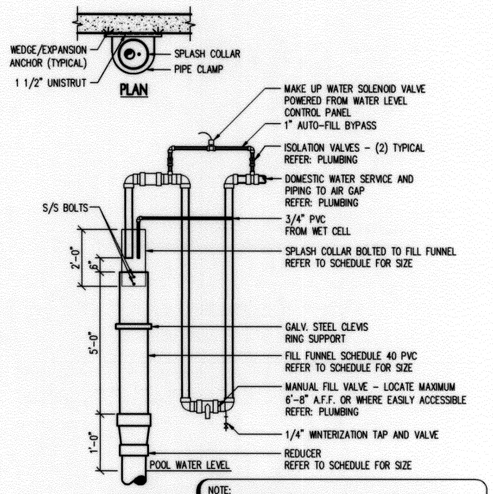

NOTE:
PLUMBING CONTRACTOR SHALL PROVIDE MAKE-UP WATER PIPING TO AIR GAP, INCLUDING SOLENOID VALVE INSTALLATION AND BACKFLOW PREVENTER IF REQUIRED. CONTRACTOR TO FURNISH SOLENOID AND PROVIDE FILL FUNNEL.

FILL FUNNEL SCHEDULE

POOL	FRESH WATER SUPPLY GPM (MIN.)	FILL FUNNEL SIZE	REDUCER SIZE	SPLASH COLLAR SIZE	FILL LINE SIZE TO POOL
POOL	70	8"	8"X4"	6"	4"

10 SP4.1 **FILL FUNNEL**
3/8" = 1'-0"

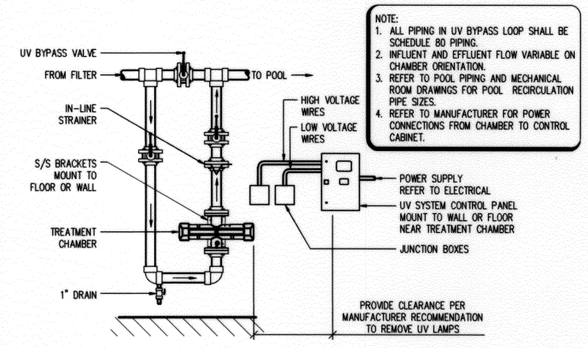

NOTE:
1. ALL PIPING IN UV BYPASS LOOP SHALL BE SCHEDULE 80 PIPING.
2. INFLUENT AND EFFLUENT FLOW VARIABLE ON CHAMBER ORIENTATION.
3. REFER TO POOL PIPING AND MECHANICAL ROOM DRAWINGS FOR POOL RECIRCULATION PIPE SIZES.
4. REFER TO MANUFACTURER FOR POWER CONNECTIONS FROM CHAMBER TO CONTROL CABINET.

7 SP4.1 **UV TREATMENT SYSTEM**
1/2" = 1'-0"

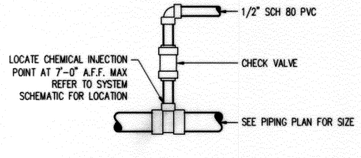

8 SP4.1 **CHEMICAL TAP AND VALVE**
3/4" = 1'-0"

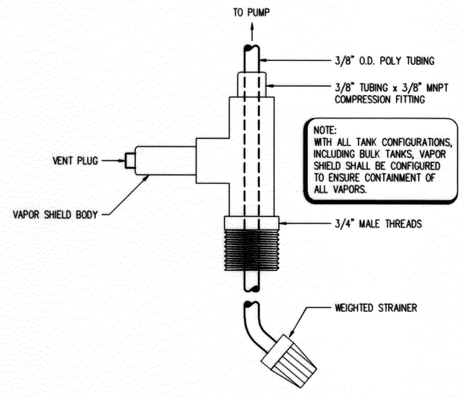

NOTE:
WITH ALL TANK CONFIGURATIONS, INCLUDING BULK TANKS, VAPOR SHIELD SHALL BE CONFIGURED TO ENSURE CONTAINMENT OF ALL VAPORS.

4 SP4.1 **ACID VENT PIPING**
6" = 1'-0"

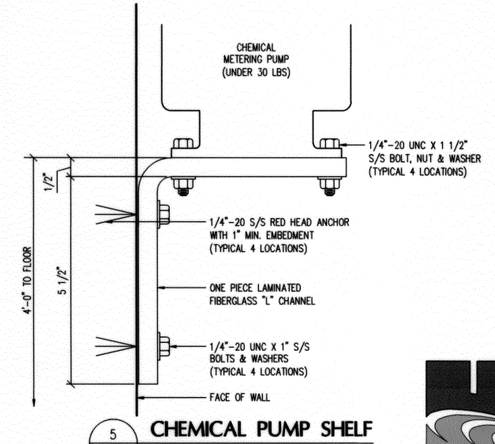

5 SP4.1 **CHEMICAL PUMP SHELF**
6" = 1'-0"

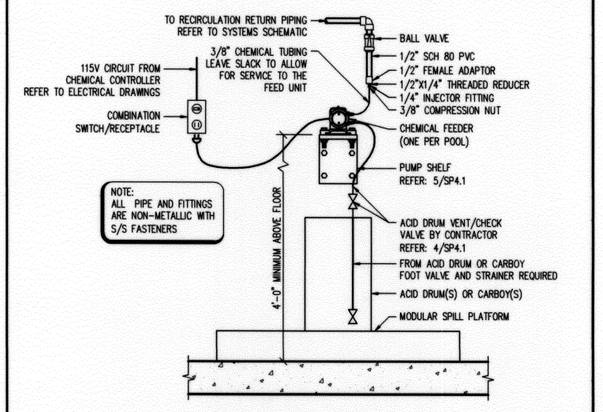

2 SP4.1 **ACID SYSTEM**
3/4" = 1'-0"

COUNSILMAN•HUNSAKER
ph: 314.884.1246 • www.chh2o.com

GH2 ARCHITECTS

LICENSED PROFESSIONAL ENGINEER
DARREN THOMAS BEVARD
24491
OKLAHOMA

SP4.1 POOL MECHANICAL DETAILS

PROJECT NO. 147400 CONTRACT # 147400

TULSA PARKS DEPARTMENT
LACY POOL RECONSTRUCTION

CITY OF TULSA, OKLAHOMA
ENGINEERING SERVICES DEPARTMENT

PLANS AND ESTIMATES PREPARED BY:
GH2 ARCHITECTS, LLC.

REVISION	BY	DATE

PLAN SCALE: AS NOTED
PROFILE SCALE:
HORIZONTAL: x:1" = ??
VERTICAL x:1" = ?

DRAWN	NRK	10/24/2016
DESIGNED	TDS	10/24/2016
SURVEY		
PROJ. MGR.		10/16
LEAD ENGR.		
FIELD MGR.		10/16
RECOMMENDED		
DESIGN MANAGER		

APPROVED:
CITY ENGINEER
DATE: 11.11.16

FILE: DRAWING: SP4.1
ATLAS PAGE NO: 116
SHEET 67 OF 74 SHEETS

2134 N. MADISON PLACE, TULSA, OK GH2 PROJECT #: 20140022.01

© 2016 COUNSILMAN • HUNSAKER

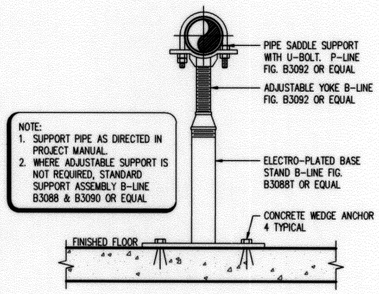

8 SP4.2 **FLOOR MOUNTED PIPE SUPPORT**
3" = 1'-0"

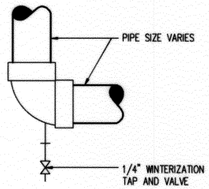

5 SP4.2 **WINTERIZATION TAP AND VALVE**
1" = 1'-0"

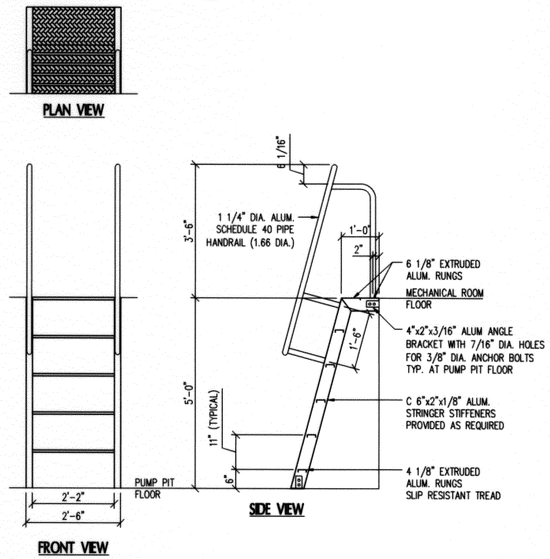

3 SP4.2 **SHIP'S LADDER**
1/2" = 1'-0"

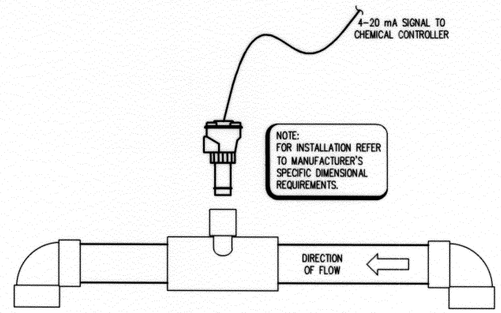

1 SP4.2 **FLOW METER SENSOR**
3/4" = 1'-0"

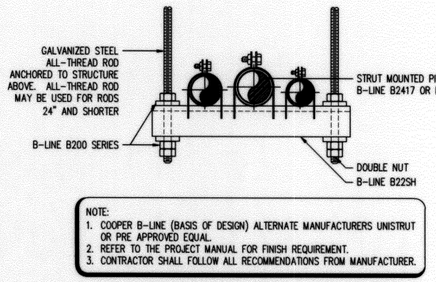

9 SP4.2 **TRAPEZE HANGER**
3" = 1'-0"

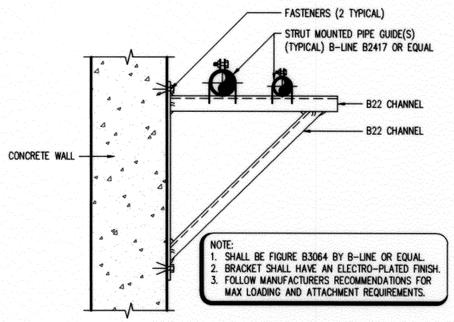

6 SP4.2 **ADJUSTABLE STRUT BRACKET**
3" = 1'-0"

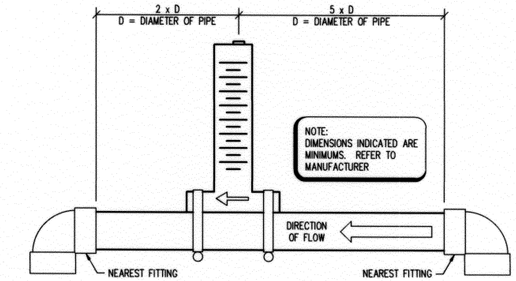

2 SP4.2 **IMPACT BACKWASH FLOW METER**
3/4" = 1'-0"

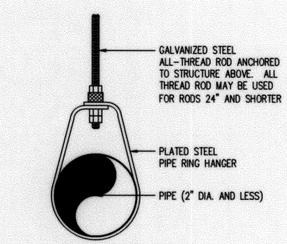

10 SP4.2 **SWIVEL RING PIPE HANGER**
1 1/2" = 1'-0"

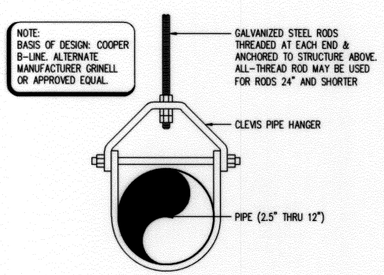

7 SP4.2 **CLEVIS PIPE HANGER**
1 1/2" = 1'-0"

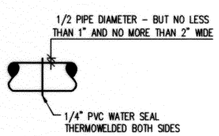

4 SP4.2 **WATER SEAL**
3/4" = 1'-0"

COUNSILMAN•HUNSAKER
ph: 314.884.1245 • www.chh2o.com

GH2 ARCHITECTS

SP4.2 POOL MECHANICAL DETAILS

PROJECT NO. 147400 CONTRACT # 147400

TULSA PARKS DEPARTMENT
LACY POOL RECONSTRUCTION

CITY OF TULSA, OKLAHOMA
ENGINEERING SERVICES DEPARTMENT

PLANS AND ESTIMATES PREPARED BY:
GH2 ARCHITECTS, LLC.

LICENSED PROFESSIONAL ENGINEER — DARREN THOMAS BEVARD 24491 — OKLAHOMA

REVISION	BY	DATE

PLAN SCALE: AS NOTED	DRAWN	NRK	10/24/2016
	DESIGNED	TDS	10/24/2016
	SURVEY		
PROFILE SCALE:	PROJ. MGR.		
HORIZONTAL: x:1" = ??	LEAD ENGR.		
	FIELD MGR.		
VERTICAL x:1" = ?	RECOMMENDED		
	DESIGN MANAGER		
FILE: DRAWING: SP4.2			
ATLAS PAGE NO: 116			

APPROVED:

CITY ENGINEER

DATE: 11.11.16

SHEET 68 OF 74 SHEETS

2134 N. MADISON PLACE, TULSA, OK GH2 PROJECT #: 20140022.01

© 2016 COUNSILMAN • HUNSAKER

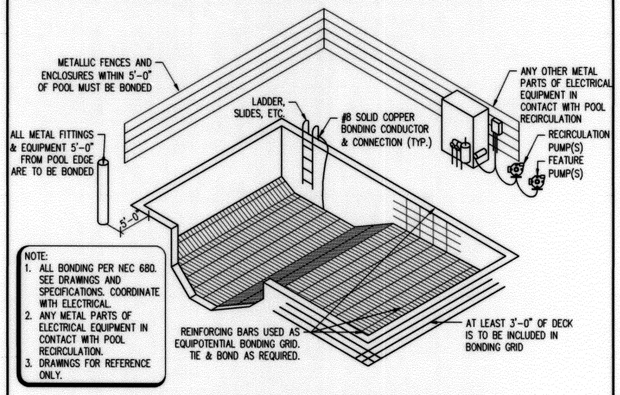

8 SP4.3 **TYPICAL POOL BONDING DETAIL**

NTS

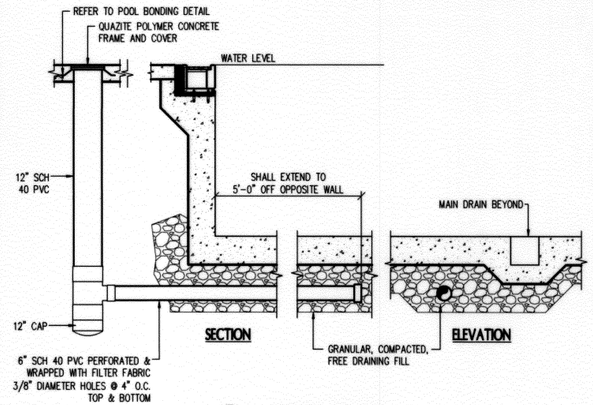

5 SP4.3 **SIGHT SUMP**

3/8" = 1'-0"

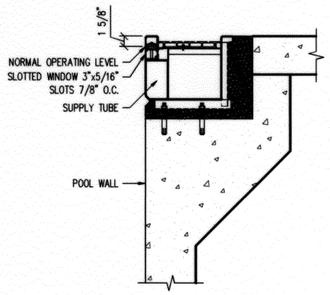

3 SP4.3 **GUTTER WEIR**

1" = 1'-0"

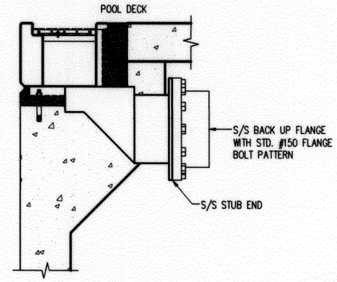

1 SP4.3 **GUTTER DROPOUT BOX**

1" = 1'-0"

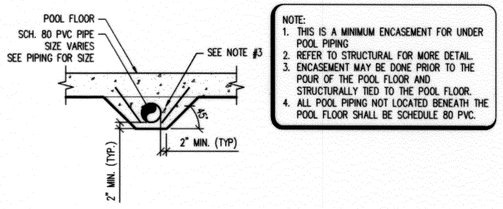

6 SP4.3 **CONCRETE ENCASED PIPE**

1/2" = 1'-0"

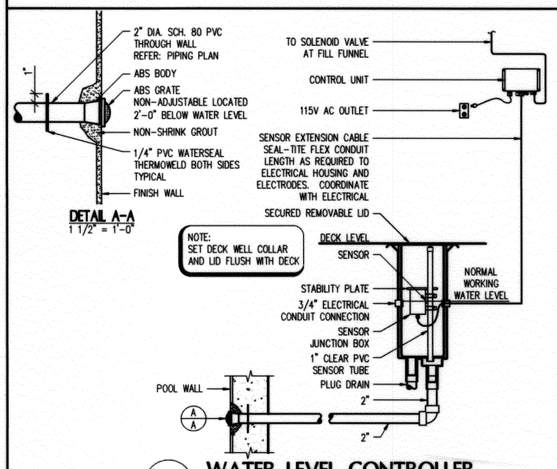

7 SP4.3 **WATER LEVEL CONTROLLER**

3/4" = 1'-0"

MAIN DRAIN DEPTH SCHEDULE	
STUB SIZE (NPS)	MINIMUM DEPTH
2"	12"
3"	12"
4"	14.25"
6"	19.5"
8"	24.5"
10"	30"
12"	35"
14"	38"

NOTE:
1. ALL MAIN DRAINS SHALL BE CONSTRUCTED TO COMPLY WITH THE VIRGINIA GRAEME BAKER ACT AND ASME A112.19.8.2007/2008A.
2. MAIN DRAINS MAY USE MULTIPLE VGB COMPLIANT GRATES SECURELY FASTENED PER MANUFACTURER RECOMMENDATIONS.
3. MAIN DRAIN SUMP DEPTH MAY NEED TO EXTEND LOWER TO ALLOW FOR WINTERIZATION. CONTRACTOR SHALL CONFIRM DEPTH PRIOR TO INSTALLATION.

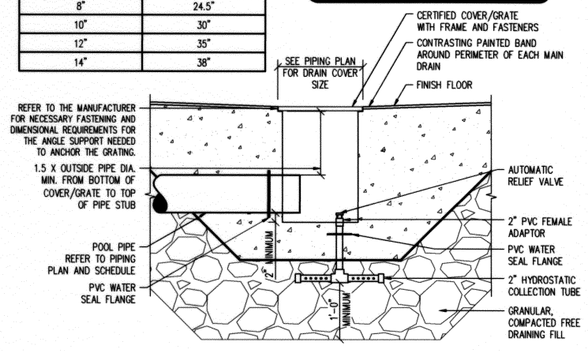

4 SP4.3 **MAIN DRAIN**

3/4" = 1'-0"

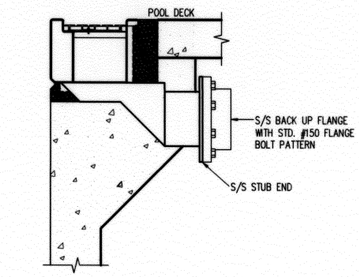

2 SP4.3 **SUPPLY CONVERTER**

1" = 1'-0"

COUNSILMAN•HUNSAKER
ph: 314.894.1248 • www.chh2o.com

GH2 ARCHITECTS

SP4.3 POOL MECHANICAL DETAILS

PROJECT NO. 147400 CONTRACT # 147400

TULSA PARKS DEPARTMENT
LACY POOL RECONSTRUCTION

CITY OF TULSA, OKLAHOMA
ENGINEERING SERVICES DEPARTMENT

PLANS AND ESTIMATES PREPARED BY:
GH2 ARCHITECTS, LLC.

LICENSED PROFESSIONAL ENGINEER — DARREN THOMAS BEVARD 24491 — OKLAHOMA

REVISION	BY	DATE

PLAN SCALE: AS NOTED
PROFILE SCALE:
HORIZONTAL: x:1" = ??
VERTICAL x:1" = ?

DRAWN	NRK	10/24/2016
DESIGNED	TDS	10/24/2016
SURVEY		
PROJ. MGR.		10/26/16
LEAD ENGR.		
FIELD MGR.		10/26/16
RECOMMENDED:		
DESIGN MANAGER		10/26/16

APPROVED:
CITY ENGINEER

FILE: DRAWING: SP4.3
DATE: 11.11.16
ATLAS PAGE NO: 116
SHEET 69 OF 74 SHEETS

© 2016 COUNSILMAN•HUNSAKER

SCHEMATIC LEGEND

LEGEND	ITEM
◀	FLOW DIRECTION
	BUTTERFLY VALVE
	BALL VALVE
	GATE VALVE
	MODULATING FLOAT VALVE
PRV-1	PRESSURE REDUCING VALVE
S	SOLENOID VALVE
	SWING GATE CHECK VALVE
	THREE WAY VALVE
	DUCK BILLED VALVE
	PUMP
	HAIR AND LINT STRAINER
	"Y" STRAINER
F	FLOW METER
FI	FLOW INTERLOCK
FS	FLOW SENSOR
	IMPACT FLOW METER
	VENTURI FLOW METER
W	WATER METER
AV	AUTOMATIC AIR VENT
MV	MANUAL AIR VENT
P	PRESSURE GAUGE AND COCK
C	COMPOUND GAUGE AND COCK
	DIGITAL TEMP SENSOR
	THERMOMETER
G	GEAR
A	PNEUMATIC ACTUATOR
S	SOLENOID
	POWER CORD
	FLOW CONTROL VALVE
V	VARIABLE FREQUENCY DRIVE
R	REMOTE START/STOP
E	EMERGENCY STOP
	LOW VOLTAGE CONTROL
	WATER LINE
	1 PHASE POWER
	3 PHASE POWER
	VENT LINE
	CO_2 LINE
N	NETWORK LINE

NOTE:
1. THE WATER CHEMISTRY CONTROLLER SHALL BE INTERLOCKED WITH THE RECIRCULATION PUMP TO DISABLE ITS OPERATION WHEN THE RECIRCULATION PUMP IS SHUT-OFF. THE WATER CHEMISTRY CONTROLLER SHALL ALSO BE DISABLED DURING THE BACK-WASH CYCLES.
2. ALL PROPRIETARY NAMES INDICATED ARE BASIS OF DESIGN AND INDICATE THE MINIMUM LEVEL OF PERFORMANCE STANDARDS.
3. LOCATE CHEMICAL INJECTION POINT AT 7'-0" A.F.F. MAXIMUM.

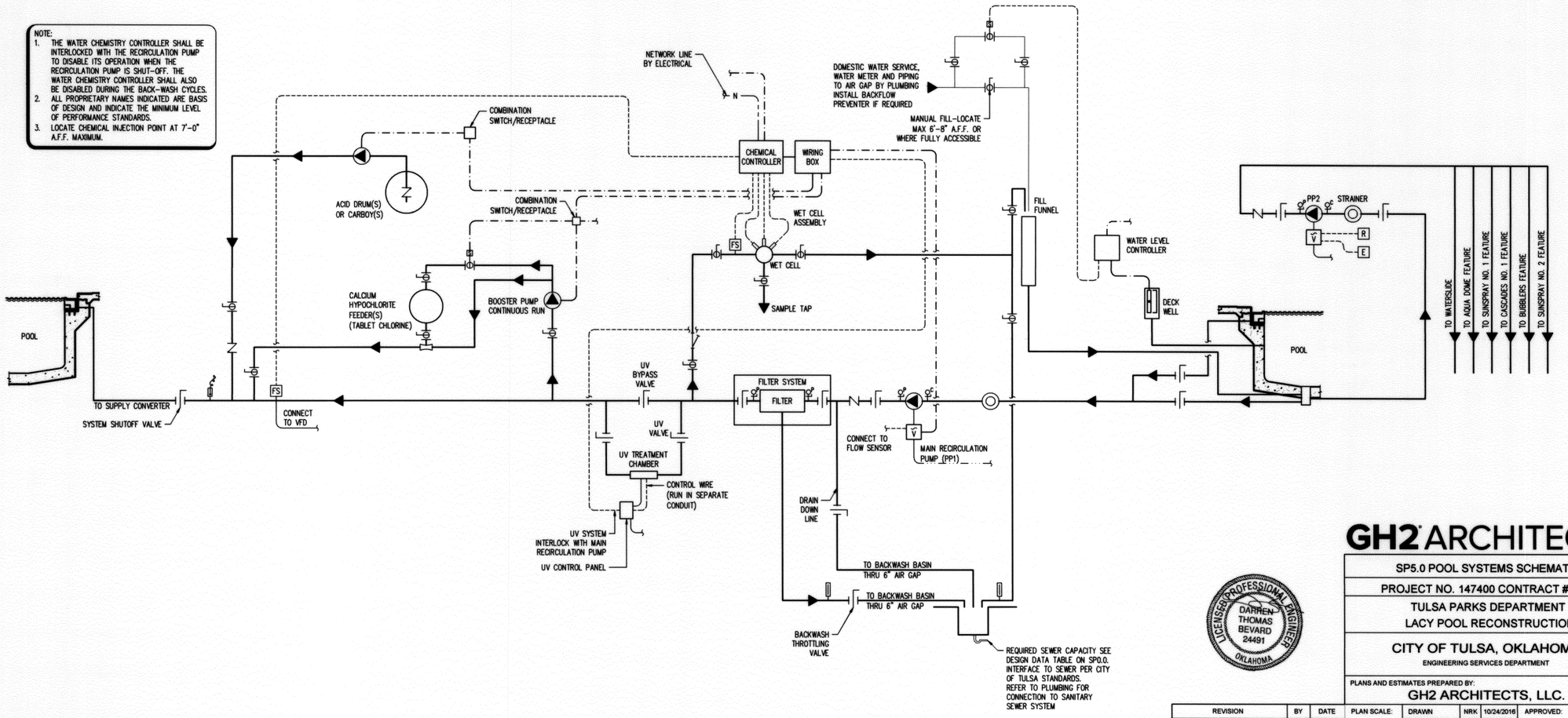

1 / SP5.0 **POOL SYSTEMS SCHEMATIC**
NTS

COUNSILMAN•HUNSAKER
ph: 314.894.1245 • www.chh2o.com

LICENSED PROFESSIONAL ENGINEER
DARREN THOMAS BEVARD
24491
OKLAHOMA

GH2 ARCHITECTS

SP5.0 POOL SYSTEMS SCHEMATIC

PROJECT NO. 147400 CONTRACT # 147400

TULSA PARKS DEPARTMENT
LACY POOL RECONSTRUCTION

CITY OF TULSA, OKLAHOMA
ENGINEERING SERVICES DEPARTMENT

PLANS AND ESTIMATES PREPARED BY:
GH2 ARCHITECTS, LLC.

REVISION	BY	DATE

PLAN SCALE: AS NOTED
PROFILE SCALE:
HORIZONTAL: x;1" = 7'
VERTICAL x;1" = 7

DRAWN	NRK	10/24/2016
DESIGNED	TDS	10/24/2016
SURVEY		
PROJ. MGR.		10/26/16
LEAD ENGR.		
FIELD MGR.		10/16
RECOMMENDED DESIGN MANAGER		10/26/16

APPROVED: CITY ENGINEER

FILE: DRAWING: SP5.0
DATE: 11.11.16
ATLAS PAGE NO: 116
SHEET 70 OF 74 SHEETS

2134 N. MADISON PLACE, TULSA, OK GH2 PROJECT #: 20140022.01

© 2016 COUNSILMAN•HUNSAKER

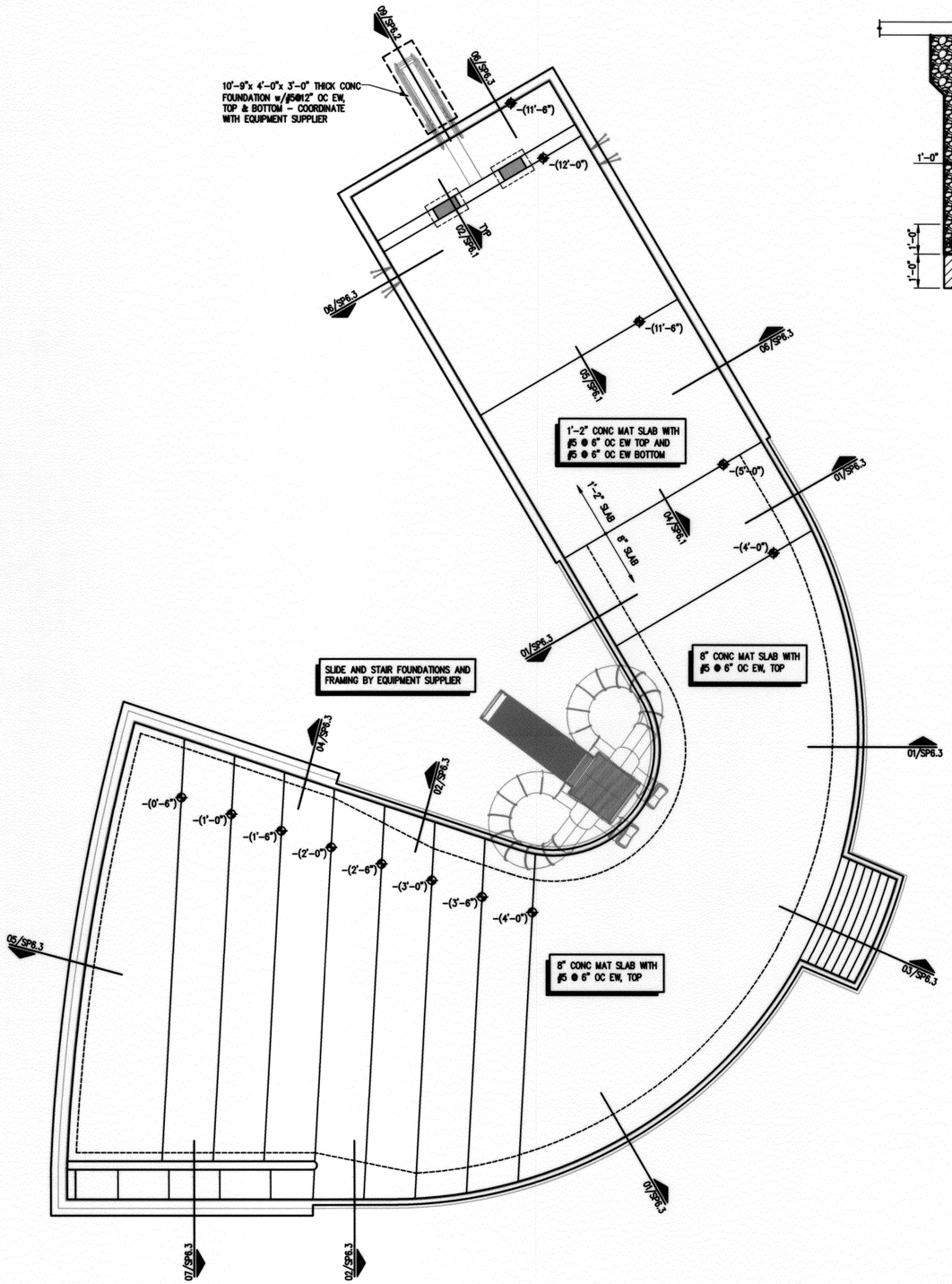

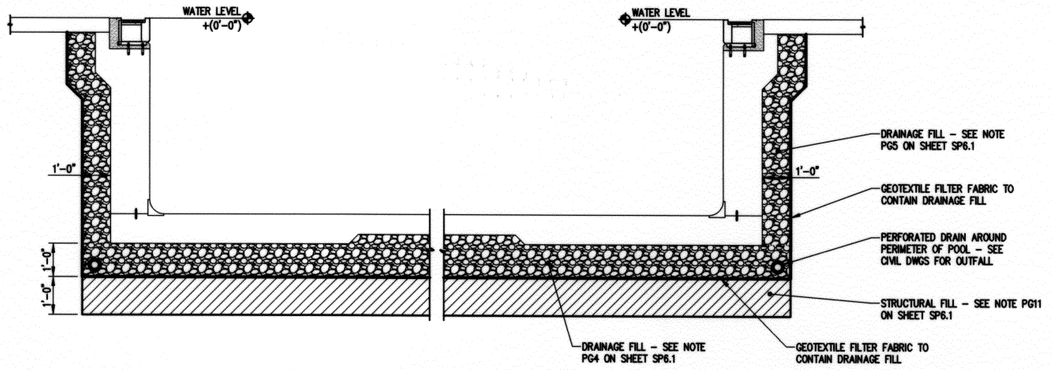

TYPICAL POOL FILL

SCALE: NTS

DET012_16096 — 01 / SP6.0

POOL STRUCTURAL PLAN

SCALE: 1/8" = 1'-0" 0' 1' 2' 4' 8' 16'

PLAN NORTH

PLAN NOTES:

1. WATER ELEVATION OF POOLS = +(0'-0"). SEE CIVIL DRAWINGS FOR CORRELATION TO ACTUAL SITE ELEVATION.
2. PROVIDE COMPACTED, FREE DRAINING FILL UNDER ALL POOL BOTTOM SLABS. SEE NOTE PG4 ON SHEET SP6.1.
3. PROVIDE ELECTRICAL GROUNDING FOR ALL REINFORCING AND EMBEDDED ITEMS, SEE ELECTRICAL DRAWINGS.
4. SEE SWIMMING POOL DRAWINGS FOR ALL DIMENSIONS NOT SHOWN.
5. WALLS ARE TYPICALLY SHOWN ON PLAN AT FOUNDATION LEVEL. SEE DETAILS & COORDINATE WITH SWIMMING POOL DRAWINGS FOR ALL WALL DETAIL ABOVE BASE SLAB.
6. ELEVATIONS ARE GIVEN RELATIVE TO POOL WATER SURFACE, UNO. COORDINATE WITH SWIMMING POOL DRAWINGS.
7. ALL ELEVATIONS ARE TO POOL FINISH.

GH2 ARCHITECTS

1717 East 116th Street, Suite 200
Carmel, Indiana 46032

317-580-0402
www.mccomaseng.com
Firm No. CA5642
MEI 16096

McCOMAS ENGINEERING Structural Engineers

COUNSILMAN•HUNSAKER
ph: 314.894.1245 • www.chh2o.com

2134 N. MADISON PLACE, TULSA, OK

REGISTERED PROFESSIONAL ENGINEER — C. RODNEY McCOMAS 17613 — OKLAHOMA

10-24-2016

REVISION	BY	DATE

SP6.0 POOL STRUCTURAL PLAN

PROJECT NO. 147400 CONTRACT # 147400

TULSA PARKS DEPARTMENT
LACY POOL RECONSTRUCTION

CITY OF TULSA, OKLAHOMA
ENGINEERING SERVICES DEPARTMENT

PLANS AND ESTIMATES PREPARED BY:
GH2 ARCHITECTS, LLC.

PLAN SCALE: AS NOTED	DRAWN	LKM	10/24/2016	APPROVED:
	DESIGNED	TMM	10/24/2016	
PROFILE SCALE:	SURVEY			
HORIZONTAL: AS NOTED	PROJ. MGR.		10/16	
	LEAD ENGR.			
VERTICAL AS NOTED	FIELD MGR.		10/16	
	RECOMMENDED DESIGN MANAGER			CITY ENGINEER

FILE: DRAWING: SP6.0 — DATE: 11.11.16

ATLAS PAGE NO: 116 — SHEET 71 OF 74 SHEETS

GH2 PROJECT #: 20140022.01

© 2016 COUNSILMAN • HUNSAKER

ABBREVIATIONS LIST

AR	ANCHOR RODS	K	KIP
ABV	ABOVE	KO	KNOCK OUT
ACI	AMERICAN CONCRETE INSTITUTE	LB	POUND
ADD'L	ADDITIONAL	LDG	LEDGE
ADH	ADHESIVE	LG	LONG
ADJ	ADJACENT	LL	LIVE LOAD
AESS	ARCHITECTURALLY EXPOSED STRUCTURAL STEEL	LLH	LONG LEG HORIZONTAL
		LLV	LONG LEG VERTICAL
AFF	ABOVE FINISHED FLOOR	LNTL	LINTEL
AGGR	AGGREGATE	LSL	LONG SLOTTED HOLES
AHU	AIR HANDLING UNIT	LONG	LONGITUDINAL
AISC	AMERICAN INSTITUTE OF STEEL CONSTRUCTION	LP	LOW POINT
		LVL	LAMINATED VENEER LUMBER
AISI	AMERICAN IRON AND STEEL INSTITUTE	MAS	MASONRY
		MAT'L	MATERIAL
ALUM	ALUMINUM	MAX	MAXIMUM
ALT	ALTERNATE	MBM	METAL BUILDING MFR
APA	AMERICAN PLYWOOD ASSOCIATION	MCJ	MASONRY CONTROL JT
APPROX	APPROXIMATE	MECH	MECHANICAL
ARCH	ARCHITECT	MEZZ	MEZZANINE
ARCH'L	ARCHITECTURAL	MFR	MANUFACTURER
ASTM	AMERICAN SOCIETY OF TESTING MATERIALS	MIN	MINIMUM
		MISC	MISCELLANEOUS
AWS	AMERICAN WELDING SOCIETY	MO	MASONRY OPENING
L	ANGLE	MOM	MOMENT
BAL	BALANCE	MSW	MASONRY SHEAR WALL
BB	BOND BEAM	MSL	MEAN SEA LEVEL
B/B	BACK TO BACK	MTL	METAL
BC	BOTTOM CHORD	MW	MASONRY WALL
BD	BOARD	NIC	NOT IN CONTRACT
BLDG	BUILDING	NO	NUMBER
BLK	BLOCK	NS	NEAR SIDE
BLW	BELOW	NTS	NOT TO SCALE
BM	BEAM	O/O	OUT TO OUT
BOTT	BOTTOM	OA	OVERALL
BP	BEARING PLATE	OC	ON CENTER
BRDG	BRIDGING	OD	OUTSIDE DIAMETER
BRG	BEARING	OF	OUTSIDE FACE
BRK	BRICK	OH	OVER HEAD
BS	BOTH SIDES	OPNG	OPENING
BSMT	BASEMENT	OPP	OPPOSITE
BTWN	BETWEEN	OPP HD	OPPOSITE HAND
BUC	BUILT UP COLUMN	OSB	ORIENTED STRAND BOARD
c	CAMBER	OSL	OUTSTANDING LEG
C/C	CENTER TO CENTER	OVS	OVERSIZE HOLE
CANT	CANTILEVER	PAF	POWDER ACTUATED FASTENER
CAIS	CAISSON	PC	PRECAST
CFS	COLD FORMED STEEL	PL	PLATE
CJ	CONTROL AND OR CONSTRUCTION JOINT	PLF	POUNDS PER LINEAR FOOT
		PLYWD	PLYWOOD
CL	CENTERLINE	PNL	PANEL
CLR	CLEAR	PROJ	PROJECTION
CMU	CONCRETE MASONRY UNIT	PSF	POUNDS PER SQUARE FOOT
COL	COLUMN	PSI	POUNDS PER SQUARE INCH
COORD	COORDINATE	PSL	PARALLEL STRAND LUMBER
COMP	COMPACTED	PT	PRESSURE TREATED
CONC	CONCRETE	PTN	PARTITION
CONN	CONNECTION	PVMT	PAVEMENT
CONST	CONSTRUCTION	R	RADIUS
CONT	CONTINUOUS	RD	ROOF DRAIN
CONTR	CONTRACTOR	REF	REFERENCE
CTR	CENTER	REINF	REINFORCE(D) (ING) (MENT)
CTR'D	CENTERED	REQ'D	REQUIRED
DIA	DIAMETER	REV	REVISION/REVISED
DIAG	DIAGONAL	RO	ROUGH OPENING
DIM	DIMENSION	RRD	ROOF RELIEF DRAIN
DL	DEAD LOAD	RTN	RETURN
DLT	DEEP LEG TRACK	RTU	ROOF TOP UNIT
DO	DITTO	RW	RETAINING WALL
DN	DOWN	SCHED	SCHEDULE
DTL	DETAIL	SECT	SECTION
DWG	DRAWING	SHT	SHEET
DWL	DOWEL	SIM	SIMILAR
EA	EACH	SJ	SAWCUT JOINT
EE	EACH END	SJI	STEEL JOIST INSTITUTE
EF	EACH FACE	SL	SLOPED
EJ	EXPANSION JOINT	SLRS	SEISMIC LOAD RESISTING SYSTEM
ENG	ENGINEER		
ELEV	ELEVATION	SPA	SPACE(S)
ELECT	ELECTRICAL	SPECS	SPECIFICATIONS
EOD	EDGE OF DECK	SQ	SQUARE
EOS	EDGE OF SLAB	SS	STAINLESS STEEL
EQ	EQUAL	SSL	SHORT SLOTTED HOLES
EQUIV	EQUIVALENT	STD	STANDARD
ES	EACH SIDE	STIFF	STIFFENERS
EW	EACH WAY	STL	STEEL
EXIST-EX	EXISTING	STRUCT	STRUCTURAL
EXP	EXPANSION	SW	SHEAR WALL
EXT	EXTERIOR	SYMM	SYMMETRICAL
F/	FACE OF	T&B	TOP AND BOTTOM
FD	FLOOR DRAIN	T&G	TONGUE AND GROOVE
FDN	FOUNDATION	TB	TIE BEAM
FIN	FINISH	TC	TOP CHORD
FLR	FLOOR	TEMP	TEMPERATURE
FLG	FLANGE	TF	TRENCH FOOTING
FS	FARSIDE	THK	THICK
FTG	FOOTING	THKS	THICKENED SLAB
GA	GAUGE	THR'D	THREADED
GALV	GALVANIZED	TL	TOTAL LOAD
GB	GRADE BEAM	TOP'G	TOPPING
GC	GENERAL CONTRACTOR	TRANS	TRANSVERSE
GL	GLULAM	TYP	TYPICAL
GR	GRADE	UNO	UNLESS NOTED OTHERWISE
HC	HOLLOW CORE	VERT	VERTICAL
HD	HOLD DOWN	VIF	VERIFY IN FIELD
HGT	HEIGHT	w/	WITH
HI	HIGH	WD	WOOD
HK	HOOK	WO	WINDOW OPENING (MASONRY)
HORIZ	HORIZONTAL	WP	WORKING POINT
HP	HIGH POINT	WT	WEIGHT
HS	HEADED STUD	WWF	WELDED WIRE FABRIC
HSS	HOLLOW STRUCTURAL SECTION		
ID	INSIDE DIAMETER		
IF	INSIDE FACE		
INFO	INFORMATION		
INT	INTERIOR		
INV	INVERT		
JST	JOIST		
JT	JOINT		

ELEVATION TOP AND BOTTOM OF LIST

T/	ELEVATION, TOP OF
B/	ELEVATION, BOTTOM OF
T/BB	TOP OF BOND BEAM
T/BM	TOP OF BEAM
T/CONC	TOP OF CONCRETE
T/F	TOP OF FOOTING
T/LDG	TOP OF LEDGE
T/MAS	TOP OF MASONRY
T/P	TOP OF PIER
T/SLAB	TOP OF SLAB
T/STL	TOP OF STEEL
T/W	TOP OF WALL
T/GB	TOP OF GRADE BEAM
T/CAIS	TOP OF CAISSON
B/PL	BOTTOM OF PLATE
B/F	BOTTOM OF FOOTING

SYMBOLS

ø	DIAMETER
°	DEGREE
◈	ELEVATION
±	PLUS OR MINUS

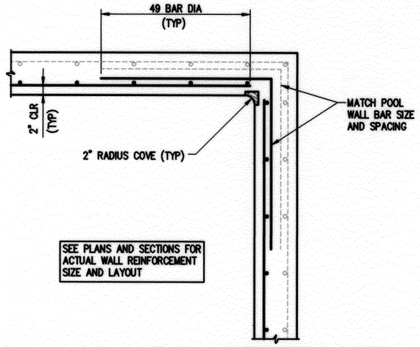

TYPICAL POOL WALL CORNER DETAIL 03 SP6.1

SCALE: ¾" = 1'-0" POOL-003

BAR DEVELOPMENT & SPLICE LENGTHS

BAR	TENSION DEVELOPMENT		SPLICES	
	TOP BAR *	OTHER	TOP BAR *	OTHER
#3	19"	15"	25"	19"
#4	25"	19"	33"	25"
#5	31"	24"	41"	31"
#6	37"	29"	49"	37"
#7	54"	42"	71"	54"
#8	62"	48"	81"	62"
#9	70"	54"	91"	70"
#10	79"	61"	102"	79"
#11	87"	67"	114"	87"

* USE TOP BAR LENGTHS WHEN BARS ARE PLACED SUCH THAT THERE IS MORE THAN 1'-0" OF CONCRETE BELOW BAR

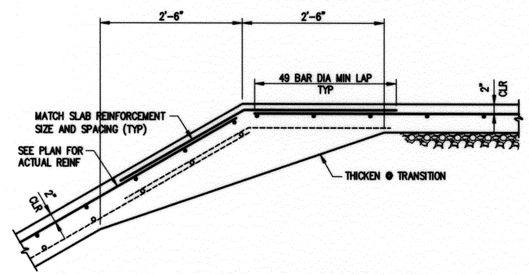

TYPICAL BOTTOM SLAB TRANSITION DETAIL 04 SP6.1

SCALE: ¾" = 1'-0" POOL-008

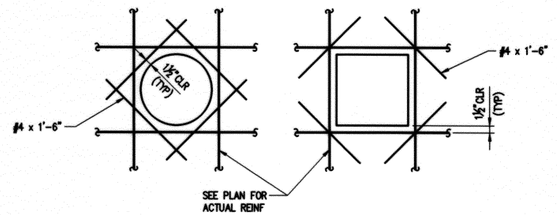

TYP REINFORCING AT EMBEDDED ITEMS 01 SP6.1

SCALE: NTS POOL-001

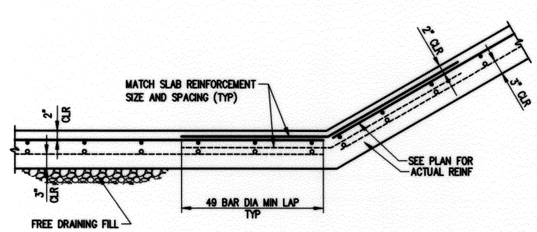

TYP BOTTOM SLAB TRANSITION DETAIL 05 SP6.1

SCALE: ¾" = 1'-0" POOL-009

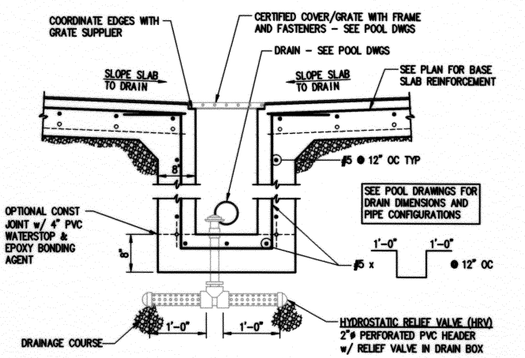

TYPICAL DRAIN BOX DETAIL 02 SP6.1

SCALE: ¾" = 1'-0" POOL-002

GENERAL POOL STRUCTURAL NOTES

PG1. Building Codes:
Model: International Building Code 2015.
Concrete: American Concrete Institute ACI 318-11, American Concrete Institute ACI 350-06.

PG2. Soil parameters listed below have been used for design of the pool structure. During construction, report any discrepancies in soil conditions to the Engineer of Record immediately.

Density:	124 pcf
Allowable Bearing Pressure:	2000 psf
Equivalent Fluid Pressure:	45 psf/ft depth (active pressure)
Passive Pressure:	343 psf/ft depth
Groundwater:	None
Frost Depth:	24" below finished grade
Differential Settlement:	½"
Total Settlement:	1"

PG3. HRV = Hydrostatic relief valves.

PG4. All pool slabs shall be placed on compacted, free-draining, frost-free drainage course:
Drainage Course: Narrowly graded mixture of washed crushed stone, or crushed or uncrushed gravel; ASTM D 448; coarse-aggregate grading Size 57; with 100 percent passing a 1-1/2-inch sieve and 0 to 5 percent passing a No. 8 sieve. All fill shall be compacted to a minimum dry density of 95% of the Modified Proctor maximum dry density (ASTM-D1557, placed in 6" to 8" lifts.

Drainage Course Thickness: 12" For water depths of 0'-0" to 3'-0"
12" For water depths greater than 3'-0"

PG5. All pool walls shall be backfilled with compacted, free-draining, frost-free drainage course:
Drainage Course: Narrowly graded mixture of washed crushed stone, or crushed or uncrushed gravel; ASTM D 448; coarse-aggregate grading Size 57; with 100 percent passing a 1-1/2-inch sieve and 0 to 5 percent passing a No. 8 sieve. All fill shall be compacted to a minimum dry density of 95% of the Modified Proctor maximum dry density (ASTM-D1557, placed in 6" to 8" lifts.

Drainage Course Thickness: 12" for pool walls

PG6. The construction documents indicate design of a completed reinforced concrete structure. The structural details have been prepared based on cast-in-place concrete methods. If alternate means and methods of concrete placement are employed that may alter the completed project, the contractor must submit proposed revisions and signed/sealed calculations to the Architect/Engineer for approval prior to fabrication or construction.

PG7. The pool structure has been designed to withstand all anticipated loadings under both full and empty conditions in accordance with the criteria of ACI 350 for a non-jointed structure.

PG8. During construction the pool structure should not be completely filled with water with no backfill present. If the pool is to be filled with water with no backfill, all walls greater than 6'-0" in height must be laterally braced at maximum intervals of 2'-0" on center. Lateral bracing shall be placed within 2'-0" of the top of the wall.

PG9. **The hydrostatic relief valves are part of the pool shell design, and are intended to balance buoyant forces caused by groundwater that is higher than the pool bottom when the pool is empty. The hydrostatic relief valves must remain open and in operation whenever the pool is empty. If the hydrostatic relief valves are not operational, significant deflection of and damage to the pool shell structure is possible. Contractor is responsible for control of groundwater levels during construction.**

PG10. The pool shell has not been designed to withstand any surcharge loading from adjacent structures. Inform engineer immediately if adjacent structures are close to the pool structure.

PG11. Structural Fill and Backfill: Select material free of organics, foreign debris or any other deleterious, non-soil materials, and composed of non-plastic to fairly low plasticity sandy clay, clayey sand, well-graded sand, silty sand or well graded gravel meeting the following requirements; 1) At least 100 percent passing #40 sieve, 2) At least 15 percent passing #200 sieve, 3) Maximum Liquid Limit of 40 percent, and 4) Plasticity Index range of 5 - 18. Material should be placed in continuous, horizontal lifts having a maximum pre-compacted thickness of 9 inches (aggregate base maximum pre-compacted thickness of 6 inches; and fill compacted with hand-held or smaller-sized equipment having a maximum pre-compacted thickness of 4 to 6 inches). Each lift should be compacted to at least 95 percent of the maximum dry density and within ±2 percentage points of the optimum moisture content as determined by a Standard Proctor (ASTM D698). The moisture content and density shall be maintained throughout construction activities.

PG12. All subgrades should be observed, evaluated and verified for the design soil bearing capacity by the geotechnical engineer after excavation and prior to reinforcement steel placement. Evaluation should include, as a minimum, Dynamic Core Pentrometer (DCP) testing at the planned bearing elevations. Excavations must be maintained in a drawined/de-watered condition throughout the construction process and water should not be allowed to pond in any excavation. Excavations for the pool base slab should be made in such a way as to provided bearing surfaces that are firm and free of loose, soft, wet or otherwise disturbed soils. Pool base slabs should be concreted as soon as practical after they are excavated and concrete should also not be placed on frozen or saturated subgrades. If pool base slab excavations must remain open overnight, or if rainfall becomes imminent while the bearing soils are exposed, it is recommended that a 2 to 4 inch thick mud mat of lean concrete with a minimum compressive strength of 1,500 pounds per square inch (psi) be placed on the bearing soils before placing the reinforcing steel so as to minimize damage to the bearing surface from weather or construction activities.

REINFORCED CONCRETE AND SHOTCRETE NOTES

PC1. Pool base slab shall be cast-in-place concrete. Pool walls shall be either cast-in-place concrete or shotcrete (wet-mix or dry-mix).

PC2. All concrete and shotcrete shall be 4000 psi minimum 28 day compressive strength with 6% air entrainment. Limit water to cementitious material ratio (w/c) to 0.42.

PC3. All reinforcing steel shall be detailed, supplied and placed in accordance with these construction documents and with ACI 318-05, ACI 315-05, and CRSI MSP-1-01.

PC4. All reinforcing steel shall be shop fabricated to conform to ASTM A615, Grade 60.

PC5. All pool concrete shall be "wet" cured using hoses and polyethylene covering.

PC6. Reinforcing clearance: 2" Pool walls
2" Pool bottom slabs, surge tank slabs
3" All surfaces cast or shot against earth

PC7. Fully encase all underslab piping in concrete unless noted otherwise.

GH2 ARCHITECTS

1717 East 116th Street, Suite 200
Carmel, Indiana 46032
317-580-0402
www.mccomaseng.com
Firm No. CA5642
MEI 16096

McCOMAS ENGINEERING
Structural Engineers

COUNSILMAN•HUNSAKER
ph: 314.894.1245 • www.chh2o.com

REGISTERED PROFESSIONAL ENGINEER
C. RODNEY McCOMAS
17613
OKLAHOMA
10-24-2016

SP6.1 POOL STRUCTURAL NOTES AND DETAILS

PROJECT NO. 147400 CONTRACT # 147400

TULSA PARKS DEPARTMENT
LACY POOL RECONSTRUCTION

CITY OF TULSA, OKLAHOMA
ENGINEERING SERVICES DEPARTMENT

PLANS AND ESTIMATES PREPARED BY:
GH2 ARCHITECTS, LLC.

REVISION	BY	DATE

PLAN SCALE: AS NOTED
PROFILE SCALE:
HORIZONTAL: AS NOTED
VERTICAL AS NOTED

DRAWN	LKM	10/24/2016
DESIGNED	TMM	10/24/2016
SURVEY		
PROJ. MGR.		
LEAD ENGR.		
FIELD MGR.		
RECOMMENDED: DESIGN MANAGER		

APPROVED: CITY ENGINEER

FILE: DRAWING: SP6.1 DATE: 11.11.16

ATLAS PAGE NO: 116 SHEET 72 OF 74 SHEETS

© 2016 COUNSILMAN • HUNSAKER

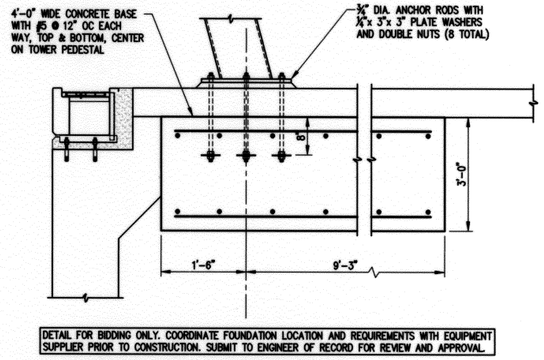

DIVE STAND FOUNDATION

SCALE: NONE — POOL-019 — 09 SP6.2

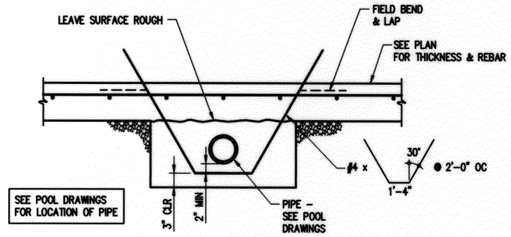

TYPICAL PIPE ENCASEMENT DETAIL

SCALE: NTS — POOL-015 — 06 SP6.2

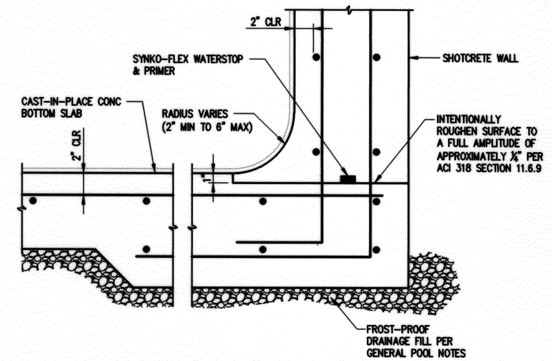

TYP SHOTCRETE WALL BASE

SCALE: 1½" = 1'-0" — POOL-006 — 03 SP6.2

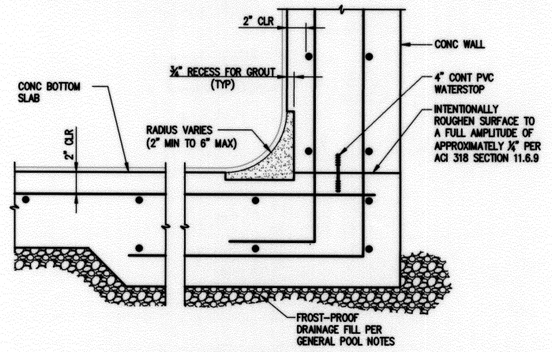

TYP CAST-IN-PLACE WALL BASE

SCALE: 1½" = 1'-0" — POOL-004 — 01 SP6.2

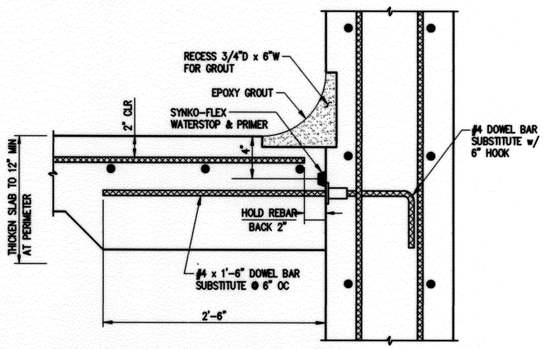

TYPICAL SLAB/WALL JOINT

SCALE: NTS — POOL-010 — 10 SP6.2

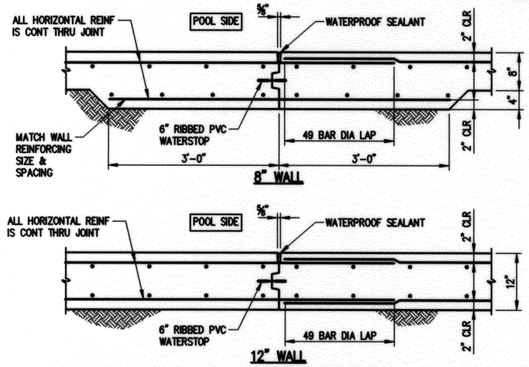

TYP CONCRETE WALL CONSTRUCTION JOINT

SCALE: ¾" = 1'-0" — POOL-016 — 07 SP6.2

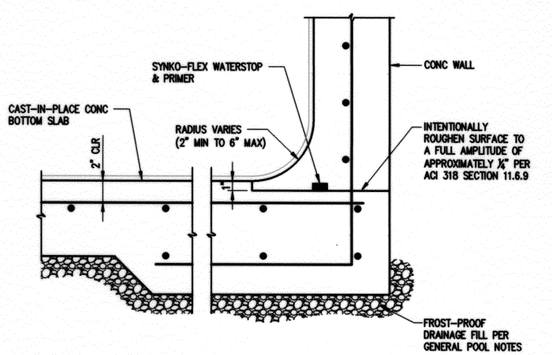

TYP SHOTCRETE WALL BASE

SCALE: 1½" = 1'-0" — POOL-007 — 04 SP6.2

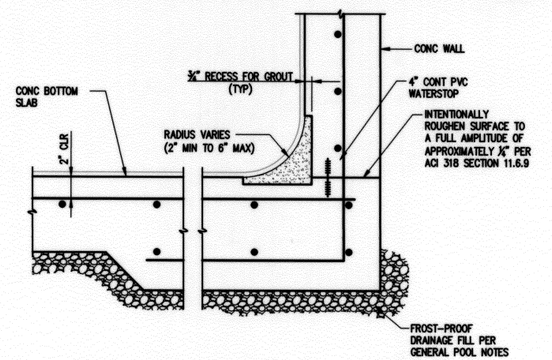

TYP CAST-IN-PLACE WALL BASE

SCALE: 1½" = 1'-0" — POOL-005 — 02 SP6.2

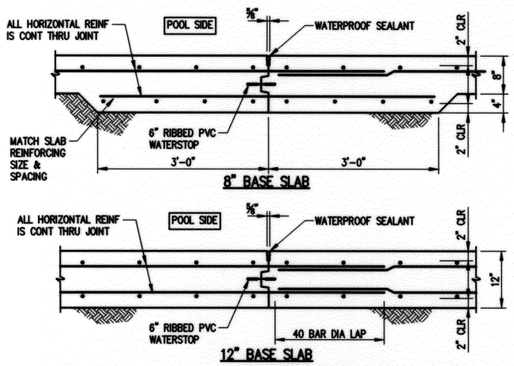

TYP BASE SLAB CONSTRUCTION JOINT

SCALE: ¾" = 1'-0" — POOL-017 — 08 SP6.2

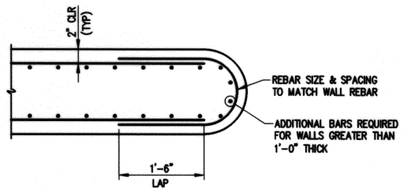

TYPICAL WALL TERMINATION DETAIL

SCALE: ¾" = 1'-0" — POOL-014 — 05 SP6.2

REGISTERED PROFESSIONAL ENGINEER — C. RODNEY McCOMAS 17613 — OKLAHOMA

10-24-2016

REVISION	BY	DATE

1717 East 116th Street, Suite 200
Carmel, Indiana 46032
317-580-0402
www.mccomaseng.com
Firm No. CA5642
MEI 16096

McCOMAS ENGINEERING Structural Engineers

COUNSILMAN•HUNSAKER
ph: 314.894.1245 • www.chh2o.com

GH2 ARCHITECTS

SP6.2 POOL STRUCTURAL DETAILS

PROJECT NO. 147400 CONTRACT # 147400

TULSA PARKS DEPARTMENT
LACY POOL RECONSTRUCTION

CITY OF TULSA, OKLAHOMA
ENGINEERING SERVICES DEPARTMENT

PLANS AND ESTIMATES PREPARED BY:
GH2 ARCHITECTS, LLC.

PLAN SCALE: AS NOTED	DRAWN	LKM	10/24/2016	APPROVED:
	DESIGNED	TMM	10/24/2016	
	SURVEY			
PROFILE SCALE:	PROJ. MGR.			
HORIZONTAL: AS NOTED	LEAD ENGR.			
	FIELD MGR.		10/16	
VERTICAL AS NOTED	RECOMMENDED DESIGN MANAGER			CITY ENGINEER
FILE: DRAWING: SP6.2				DATE: 11.11.16
ATLAS PAGE NO: 116				SHEET 73 OF 74 SHEETS

2134 N. MADISON PLACE, TULSA, OK GH2 PROJECT #: 20140022.01

© 2016 COUNSILMAN • HUNSAKER

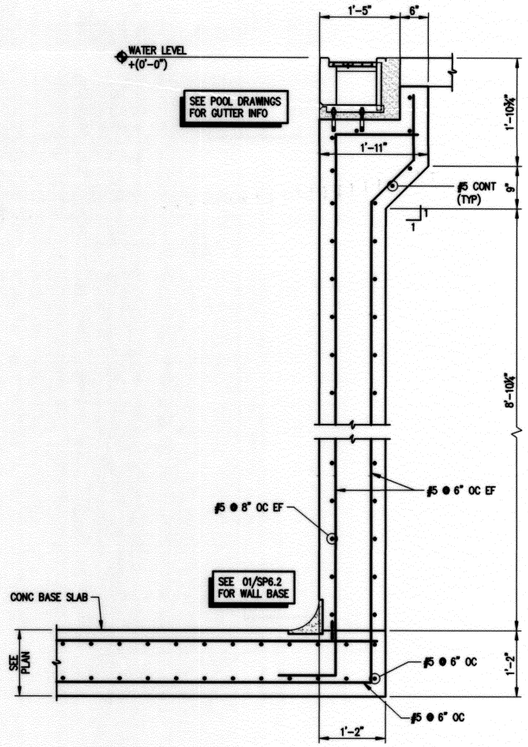

SECTION

SCALE: ¾" = 1'-0"

DET011_16096 — 08 SP6.3

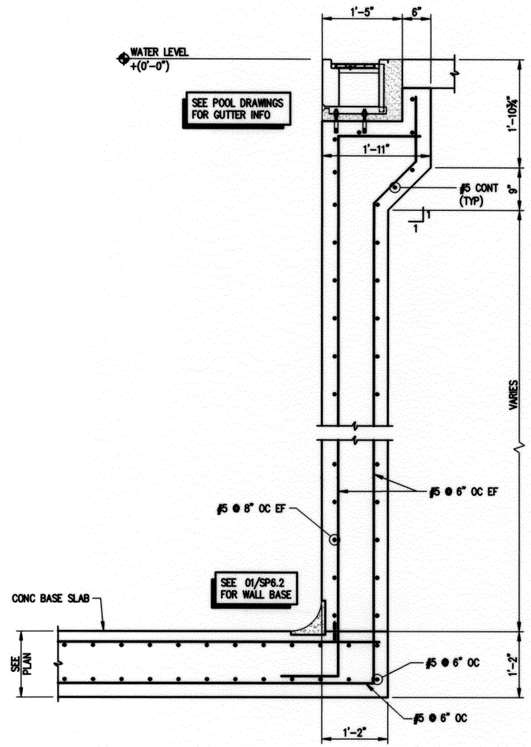

SECTION

SCALE: ¾" = 1'-0"

DET006_16096 — 06 SP6.3

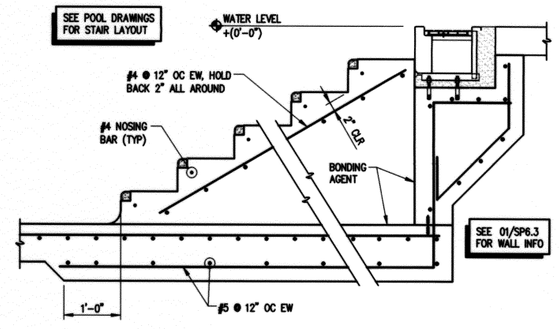

SECTION

SCALE: ¾" = 1'-0"

DET005_16096 — 03 SP6.3

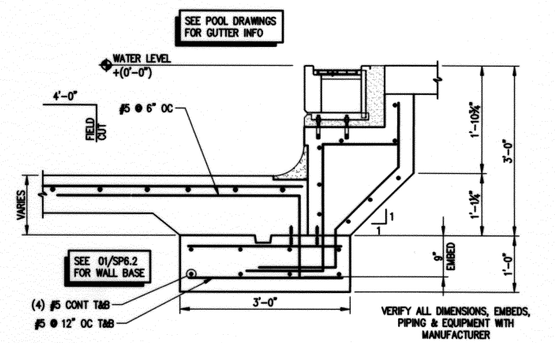

SECTION

SCALE: ¾" = 1'-0"

DET009_16096 — 04 SP6.3

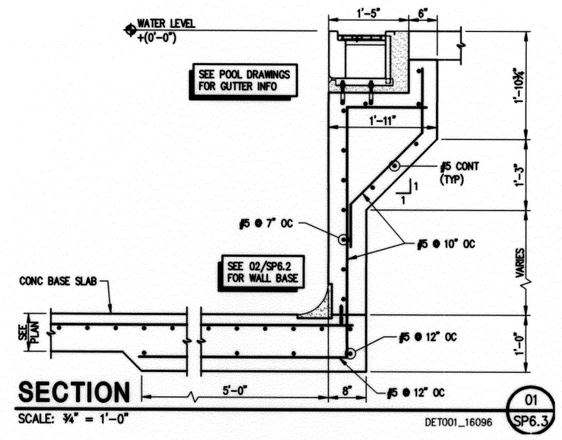

SECTION

SCALE: ¾" = 1'-0"

DET001_16096 — 01 SP6.3

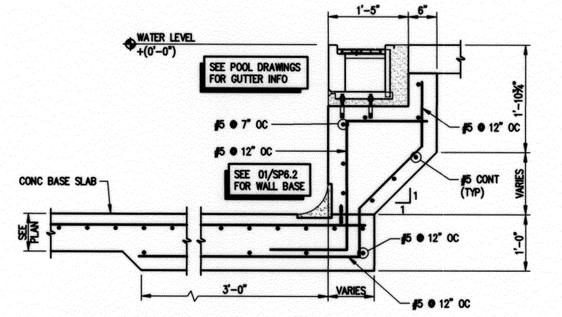

SECTION

SCALE: ¾" = 1'-0"

DET003_16096 — 02 SP6.3

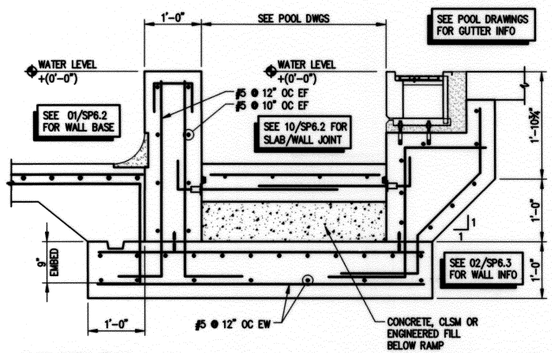

SECTION

SCALE: ¾" = 1'-0"

DET010_16096 — 07 SP6.3

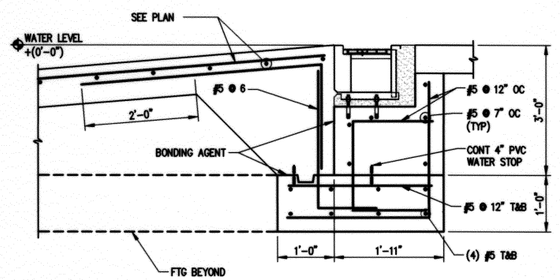

SECTION

SCALE: ¾" = 1'-0"

DET007_15240 — 05 SP6.3

REGISTERED PROFESSIONAL ENGINEER
C. RODNEY McCOMAS
17613
OKLAHOMA

10-24-2016

GH2 ARCHITECTS

SP6.3 POOL STRUCTURAL SECTIONS

PROJECT NO. 147400 CONTRACT # 147400

TULSA PARKS DEPARTMENT
LACY POOL RECONSTRUCTION

CITY OF TULSA, OKLAHOMA
ENGINEERING SERVICES DEPARTMENT

PLANS AND ESTIMATES PREPARED BY:
GH2 ARCHITECTS, LLC.

REVISION	BY	DATE

PLAN SCALE: AS NOTED	DRAWN	LKM	10/24/2016
	DESIGNED	TMM	10/24/2016
	SURVEY		
PROFILE SCALE:	PROJ. MGR.		
HORIZONTAL: AS NOTED	LEAD ENGR.		
	FIELD MGR.		
VERTICAL AS NOTED	RECOMMENDED DESIGN MANAGER		
FILE: DRAWING: SP6.3			
ATLAS PAGE NO: 116			

APPROVED:

CITY ENGINEER

DATE: 11.11.16

SHEET 74 OF 74 SHEETS

1717 East 116th Street, Suite 200
Carmel, Indiana 46032

317-580-0402
www.mccomaseng.com
Firm No. CA5642
MEI 16096

McCOMAS ENGINEERING
Structural Engineers

COUNSILMAN•HUNSAKER
ph: 314.894.1245 • www.chh2o.com

2134 N. MADISON PLACE, TULSA, OK GH2 PROJECT #: 20140022.01

© 2016 COUNSILMAN • HUNSAKER